5 Port Solenoid Valve

Series VFR2000/3000/4000/5000/6000

Rubber Seal

Series Variations

∗ 2 position single type
Passage: 4/2 → 5/3 (A/B → EA/EB)

	Series	Sonic conductance∗ C [dm³/(s·bar)]	Type of actuation	Voltage	Electrical entry	With light/surge voltage suppressor (Option)	Manual override
Base Mounted	***VFR2000*** Plug-in type Non plug-in type **P.1232**	1/8, 1/4: 3.0	2 position single (A)(B) 4 2 / 5 1 3 (EA)(P)(EB) 2 position double (A)(B) 4 2 / 5 1 3 (EA)(P)(EB) 3 position closed center (A)(B) 4 2 / 5 1 3 (EA)(P)(EB) 3 position exhaust center (A)(B) 4 2 / 5 1 3 (EA)(P)(EB) 3 position pressure center (A)(B) 4 2 / 5 1 3 (EA)(P)(EB)	(Standard) 100 VAC 50/60 Hz 200 VAC 50/60 Hz 24 VDC (Option) 110 to 120 V 50/60 Hz 220 VAC 50/60 Hz 240 VAC 50/60 Hz 12 VDC	**Plug-in** Conduit terminal (F) **Non plug-in** Grommet (G) Grommet terminal (E) Conduit terminal (T) DIN terminal (D, Y) L plug connector (L) M plug connector (M)	☐ With light/surge voltage suppressor • Plug-in type Conduit terminal (FZ) • Non plug-in type Grommet terminal (EZ) Conduit terminal (TZ) DIN terminal (DZ, YZ) L plug connector (LZ) M plug connector (MZ) ☐ With surge voltage suppressor • Non plug-in type Grommet (GS) Note) Surge voltage suppressor is equipped midway on the lead wire for grommet type.	Non-locking push type Non-locking push type A (Extended) Locking type B (Tool required) Locking type C (Lever)
	VFR3000 Plug-in type Non plug-in type **P.1251**	1/4: 7.5 3/8: 8.7			**Plug-in** Conduit terminal (F) **Non plug-in** (VFR3□10/4□10) Grommet terminal (E) DIN terminal (D) **Non plug-in** (VFR3□40/4□40) Grommet (G) Grommet terminal (E) Conduit terminal (T) DIN terminal (D, Y)	☐ With light/surge voltage suppressor • Plug-in type Conduit terminal (FZ) • Non plug-in type (VFR3□10/4□10) DIN terminal (DZ) Grommet terminal (EZ) Conduit terminal (TZ) ☐ With surge voltage suppressor • Non plug-in type (VFR3□40/4□40) Grommet (GS) Note) Surge voltage suppressor is equipped midway on the lead wire for grommet type.	
	VFR4000 Plug-in type Non plug-in type **P.1274**	3/8,1/2: 14					
	VFR5000 Plug-in type Non plug-in type **P.1297**	3/8: 18 1/2: 23 3/4: 25			**Plug-in** Conduit terminal (F) **Non plug-in** Grommet terminal (E) DIN terminal (D)	☐ With light/surge voltage suppressor • Plug-in type Conduit terminal (FZ) • Non plug-in type DIN terminal (DZ) Grommet terminal (EZ)	
	VFR6000 Plug-in type Non plug-in type **P.1312**	3/4: 41 1: (Effective area 191 mm²)			**Plug-in** Conduit terminal (F) **Non plug-in** Grommet terminal (E) DIN terminal (D)		Non-locking push type

Manifold Variations

		Base Mounted Plug-in Type			
		VFR2000 P.1240	VFR3000 P.1259	VFR4000 P.1282	VFR5000 P.1303
Manifold	With multi-connector			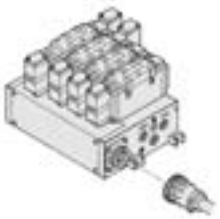	
	With terminal block		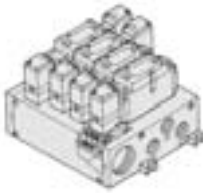		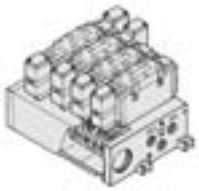
	With D-sub connector	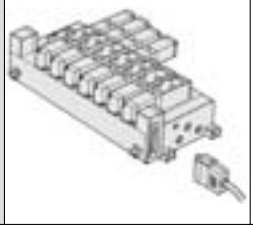	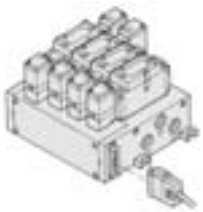	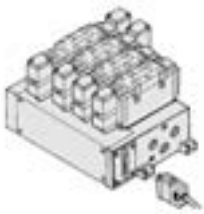	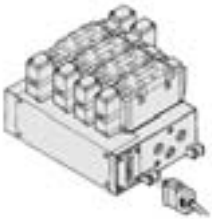

Manifold Option Parts	Individual SUP spacer	●	●	●	●
	Individual EXH spacer	●	●	●	●
	SUP block disk	●	●	●	●
	EXH block disk	●	●	●	●
	Throttle valve spacer	●	●	●	●
	Interface regulator	●	●	●	●
	Blanking plate	●	●	●	●
	Air release valve spacer	●	●	●	
	SUP stop valve spacer	● (1)	●		

Note 1) Used with the manifold base. Please contact SMC for details.
Note 2) There is no manifold base in Series VFR6000.

Manifold Option

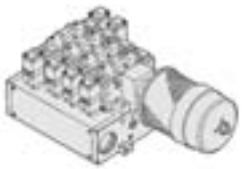

With exhaust cleaner
Plug-in type, Non plug-in type
- High noise reduction effect: 35 dB or more
- Collects oil mist: collecting rate 99.9% or more
- Piping work is reduced.

With control unit Note)
Plug-in type, Non plug-in type
- Filter, regulator, pressure switch and air release valve in one unit
- Piping work eliminated

Note) There is no option with control unit in Series VFR5000.

		Base Mounted Non Plug-in Type			
		VFR2000 P.1241	VFR3000 P.1260	VFR4000 P.1283	VFR5000 P.1304
Manifold	Common electrical entry • Grommet terminal • DIN terminal	—	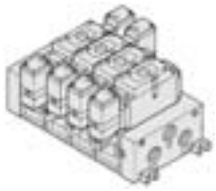	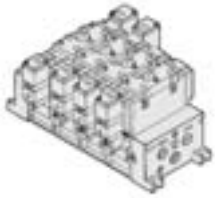	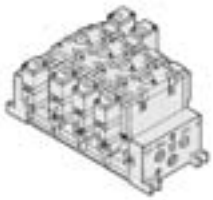
			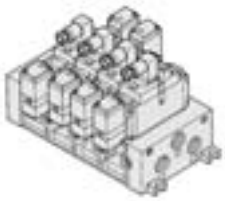	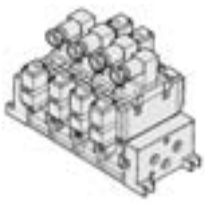	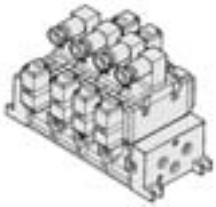
	Individual electrical entry • Grommet • Grommet terminal • Conduit terminal • DIN terminal • L plug connector Note) • M plug connector Note)	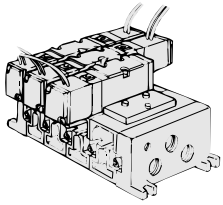	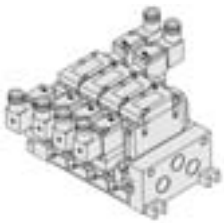	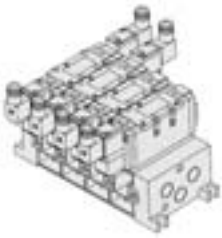	

Note) Series VFR2000 only

Manifold Option Parts	VFR2000	VFR3000	VFR4000	VFR5000
Individual SUP spacer	●	●	●	●
Individual EXH spacer	●	●	●	●
SUP block disk	●	●	●	●
EXH block disk	●	●	●	●
Throttle valve spacer	●	●	●	●
Interface regulator	●	●	●	●
Blanking plate	●	●	●	●
Air release valve spacer	●	●	●	
SUP stop valve spacer	● (1)	●		

Note 1) Used with the manifold base. Please contact SMC for details.
Note 2) There is no manifold base in Series VFR6000.

Manifold Option

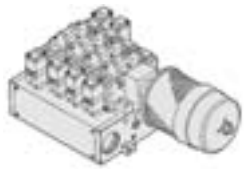

With exhaust cleaner
Plug-in type, Non plug-in type
- High noise reduction effect: 35 dB or more
- Collects oil mist: collecting rate 99.9% or more
- Piping work is reduced.

With control unit Note)
Plug-in type, Non plug-in type
- Filter, regulator, pressure switch and air release valve in one unit
- Piping work eliminated

Note) There is no option with control unit in Series VFR5000.

5 Port Pilot Operated Solenoid Valve
Rubber Seal, Plug-in/Non Plug-in
Series VFR2000

[Option] NRTL /C

Plug-in type

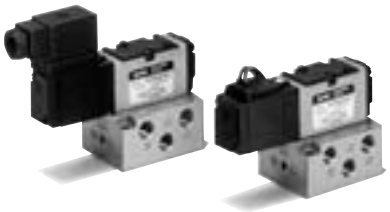

Non plug-in type

Standard Specifications

Valve specifications	Fluid		Air	
	Operating pressure range	2 position single/3 position	0.2 to 0.9 MPa	
		2 position double	0.1 to 0.9 MPa	
	Ambient and fluid temperature		–10 to 50°C (No freezing. Refer to page 5.)	
	Lubrication		Not required (1)	
	Manual override		Non-locking push type	
	Mounting orientation		Unrestricted	
	Shock/Vibration resistance		300/50 m/s² (2)	
	Enclosure		Dustproof	
Electricity specifications	Coil rated voltage		100, 200 VAC (50/60 Hz), 24 VDC	
	Allowable voltage fluctuation		–15 to –10% of rated voltage	
	Apparent power (AC) (3)	Inrush	5.6 VA/50 Hz, 5.0 VA/60 Hz	
		Holding	3.4 VA (2.1 W)/50 Hz, 2.3 VA (1.5 W)/60 Hz	
	Power consumption (DC) (3)		1.8 W	
	Electrical entry		Plug-in type	Conduit terminal
			Non plug-in type	Grommet, Grommet terminal Conduit terminal, DIN terminal L plug connector, M plug connector

Note 1) Use turbine oil Class 1 (ISO VG32), if lubricated.
Note 2) Impact resistance: No malfunction occurred when it is tested with a drop tester in the axial direction and at the right angles to the main valve and armature in both energized and de-energized states every once for each condition. (Values at the initial period)
Vibration resistance: No malfunction occurred in a one-sweep test between 45 and 2000 Hz. Test was performed at both energized and de-energized states in the axial direction and at the right angles to the main valve and armature. (Values at the initial period)
Note 3) At rated voltage

JIS Symbol

2 position	3 position
Single	Closed center
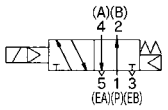	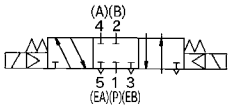
Double	Exhaust center
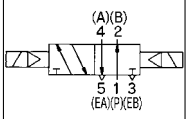	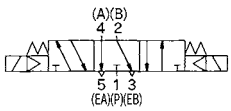
	Pressure center
	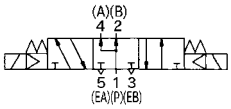

Option Specifications

Pilot type	External pilot Note)
Manual override	Non-locking push type A (Extended), Locking type B (Tool required), Looking type C (Lever)
Coil rated voltage	110 to 120, 220, 240 VAC 50/60 Hz
	12 VDC
Porting specifications	Bottom ported
Option	With light/surge voltage suppressor

Note) Operating pressure: 0 to 0.9 MPa
Pilot pressure: 2 position single/3 position 0.2 to 0.9 MPa
2 position double 0.1 to 0.9 MPa

Model

Type of actuation		Model: Plug-in	Model: Non plug-in	Port size Rc	Flow characteristics (1): 1 → 4/2 (P → A/B) C [dm³/(s·bar)]	b	Cv	4/2 → 5/3 (A/B → EA/EB) C [dm³/(s·bar)]	b	Cv	Max. operating cycle (Hz) (2)	Response time (ms) (3)	Mass (kg) (4)
2 position	Single	VFR2100	VFR2110	1/8	2.5	0.18	0.58	3.0	0.27	0.70	10	20 or less	0.34 (0.32)
				1/4	2.8	0.24	0.62	3.0	0.27	0.70			
	Double	VFR2200	VFR2210	1/8	2.4	0.21	0.56	3.1	0.28	0.74	10	20 or less	0.42 (0.44)
				1/4	2.6	0.27	0.62	3.1	0.28	0.74			
3 position	Closed center	VFR2300	VFR2310	1/8	1.3	0.45	0.36	1.4	0.46	0.41	5	30 or less	0.43 (0.45)
				1/4	1.3	0.45	0.36	1.4	0.46	0.41			
	Exhaust center	VFR2400	VFR2410	1/8	0.79	0.53	0.24	3.1 [0.89]	0.24 [0.51]	0.74 [0.27]	5	30 or less	0.43 (0.45)
				1/4	0.79	0.53	0.24	3.1 [0.89]	0.24 [0.51]	0.74 [0.27]			
	Pressure center	VFR2500	VFR2510	1/8	2.8 [0.65]	0.24 [0.60]	0.68 [0.21]	0.89	0.53	0.27	5	30 or less	0.43 (0.45)
				1/4	3.2 [0.75]	0.26 [0.55]	0.73 [0.23]	0.89	0.53	0.27			

Note 1) [ ]: Denotes the normal position.
Note 2) Min. operating frequency is once in 30 days.
Note 3) Based on dynamic performance test, JIS B 8375-1981. (0.5 MPa, Coil temperature: 20°C, at rated voltage, without surge voltage suppressor)
Note 4) For VFR2□00-□FZ-$^{01}_{02}$, ( ): VFR2□10-□DZ-$^{01}_{02}$

How to Order

Electrical entry

F: Plug-in type

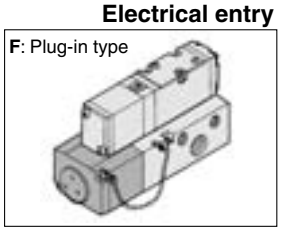

Option

Nil	None
Z	With light/surge voltage suppressor

Piping (P, A, B, EA, EB port)

Nil	Side ported
B *	Bottom ported

* Option

Port size (P, A, B port)

Nil	Without sub-plate
01	1/8
02	1/4

EA, EB port: Rc 1/8

Thread type

Nil	Rc
F	G
N	NPT
T	NPTF

Plug-in VFR2 1 00 □ – 5 F □ □ – □ 01 □ – □

Non plug-in VFR2 1 10 □ – 1 E □ □ – □ 02 □ – □

CE-compliant

Nil	—
Q	CE-compliant *

* Electrical entry: D/DO, Y/YO and F only

Pilot valve manual override

Nil: Non-locking push type	A*: Non-looking push type A (Extended)	B*: Locking type B (Tool required)	C*: Locking type C (Lever)

* Option

Symbol

1	2 position single 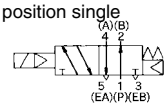
2	2 position double 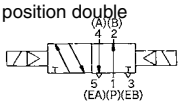
3	3 position closed center 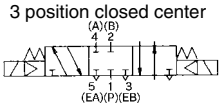
4	3 position exhaust center 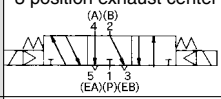
5	3 position pressure center 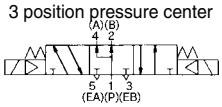

Pilot type

Nil	Internal pilot
R *	External pilot

* Option (External pilot is available only on sub-plate type.)

Coil rated voltage

1	100 VAC, 50/60 Hz
2	200 VAC, 50/60 Hz
3 *	110 to 120 VAC, 50/60 Hz
4 *	220 VAC, 50/60 Hz
5	24 VDC
6 *	12 VDC
7 *	240 VAC, 50/60 Hz Note)
9 *	Other

* Option
Note) L and M plug connectors: Max. 220 VAC

Option

Nil	None
Z	With light/surge voltage suppressor
S *	With surge voltage suppressor

* Indicator light is not available for grommet type.
With surge voltage suppressor is available for grommet type only.

Electrical entry

G: Grommet	E: Grommet terminal	T: Conduit terminal	D, Y: DIN terminal
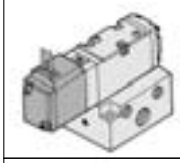	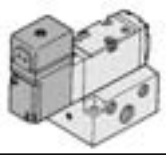	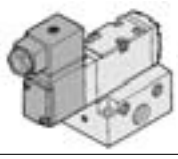	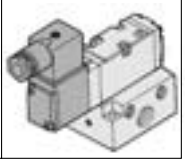
L: L plug connector	**M**: M plug connector		

How to Order Pilot Valve Assembly

SF4– 1 DZ □ –60 – □

Manual override

Nil	Non-locking push type
A *	Non-looking push type A (Extended)
B *	Locking type B (Tool required)
C *	Locking type C (Lever)

* Option

CE-compliant

Nil	—
Q	CE-compliant *

* Electrical entry: D/DO, Y/YO and F only

Coil rated voltage

1	100 VAC, 50/60 Hz
2	200 VAC, 50/60 Hz
3 *	110 to 120 VAC, 50/60 Hz
4 *	220 VAC, 50/60 Hz
5	24 VDC
6 *	12 VDC
7 *	240 VAC, 50/60 Hz Note)
9 *	Other

* Option
Note) L and M plug connectors: Max. 220 VAC

Electrical entry, Light/Surge voltage suppressor

Symbol	Electrical entry		Indicator light	With surge voltage suppressor	Body type
F	Plug-in		—	—	Plug-in type
G	Grommet		—	—	Non plug-in type
GS				●	
D	DIN terminal	With connector	—	—	
DZ			●	●	
DO		Without connector	—	—	
DOZ			●	●	
Y	DIN terminal (DIN43650B)	With connector	—	—	
YZ			●	●	
YO		Without connector	—	—	
YOZ			●	●	

Symbol	Electrical entry	Indicator light	With surge voltage suppressor	Body type
T	Conduit terminal	—	—	Non plug-in type
TZ		●	●	
E	Grommet terminal	—	—	
EZ		●	●	
L	L plug connector	—	—	
LZ		●	●	
LO	L plug connector (Without connector)	—	—	
LOZ		●	●	
M	M plug connector	—	—	
MZ		●	●	
MO	M plug connector (Without connector)	—	—	
MOZ		●	●	

Use as a guide for selection.
Please confirm the actual conditions with SMC Sizing Program.

Cylinder Speed Chart

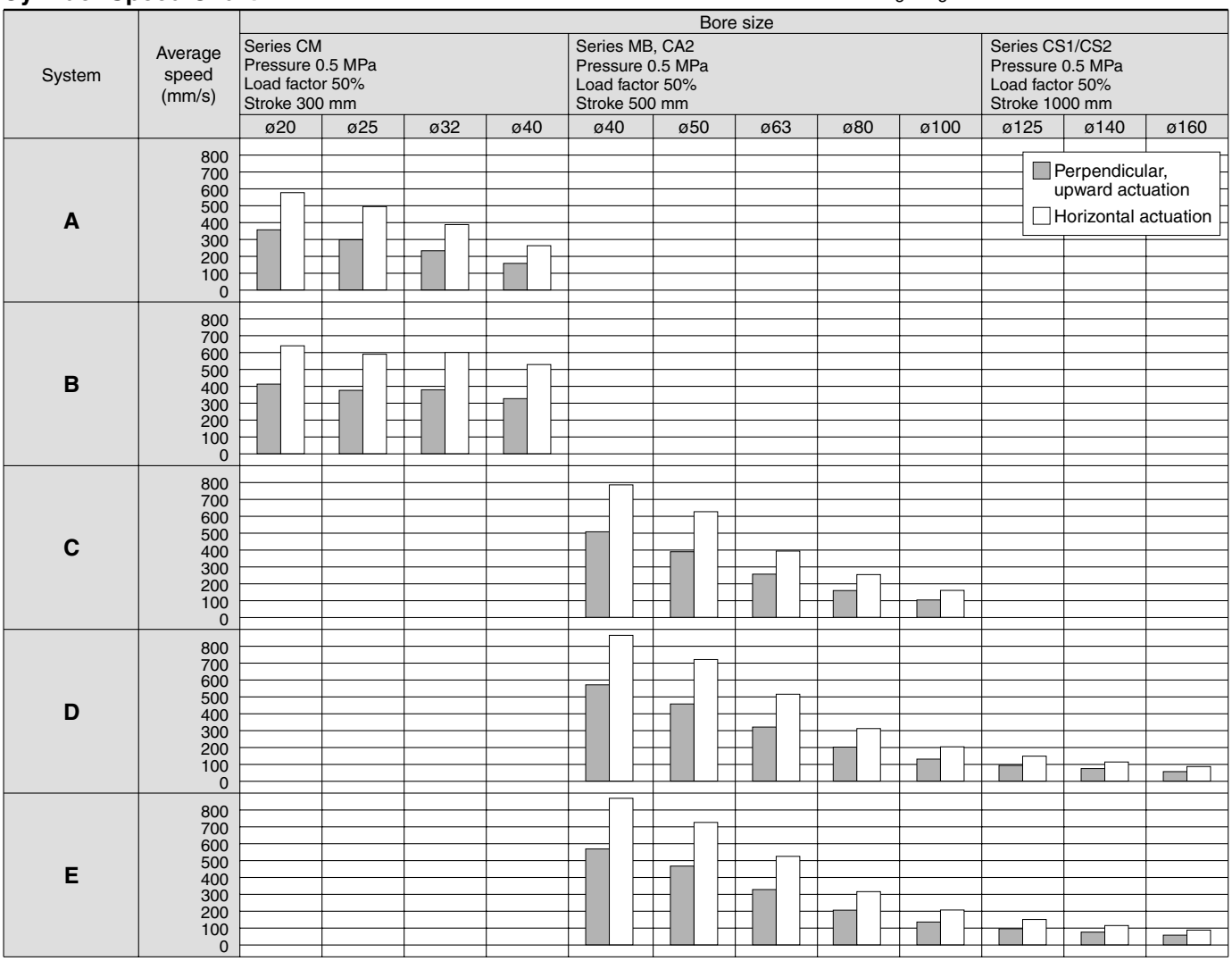

∗ It is when the cylinder is extending that is meter-out controlled by speed controller which is directly connected with cylinder, and its needle valve with being fully open.
∗ The average velocity of the cylinder is what the stroke is divided by the total stroke time.
∗ Load factor: ((Load weight x 9.8)/Theoretical force) x 100%

System Components

System	Solenoid valve	Speed controller	Silencer	Tube bore x Length
A	Series VFR2000 Rc 1/8	AS2000-01 (S = 2.5 mm²)	AN110-01 (S = 35 mm²)	T0425 x 1 m
B		AS3000-02 (S = 12 mm²)	AN110-01 (S = 35 mm²)	T0604 x 1 m
C		AS3000-02 (S = 12 mm²)	AN110-01 (S = 35 mm²)	T0806 x 1 m
D	Series VFR2000 Rc 1/4	AS4000-02 (S = 21 mm²)	AN110-01 (S = 35 mm²)	T1075 x 1 m
E		AS4000-02 (S = 21 mm²)	AN110-01 (S = 35 mm²)	T1209 x 1 m

How to Order Sub-plate Assembly

Pilot type

Nil	Internal pilot
R	External pilot

Thread type

Nil	Rc
F	G
N	NPT
T	NPTF

<Side ported>

Plug-in	VFR2000−LP−	□	02	□
Non plug-in	VFS2000−LS−	□	02	□

<Bottom ported>

Plug-in	VFR2000−LP−B	□	02	□
Non plug-in	VFS2000−LS−B	□	02	□

Piping port (P, A, B port)

01	1/8
02	1/4

EA, EB port: Rc 1/8

Note) Mounting bolts and gaskets are not attached.

Construction

2 position single

VFR21□0

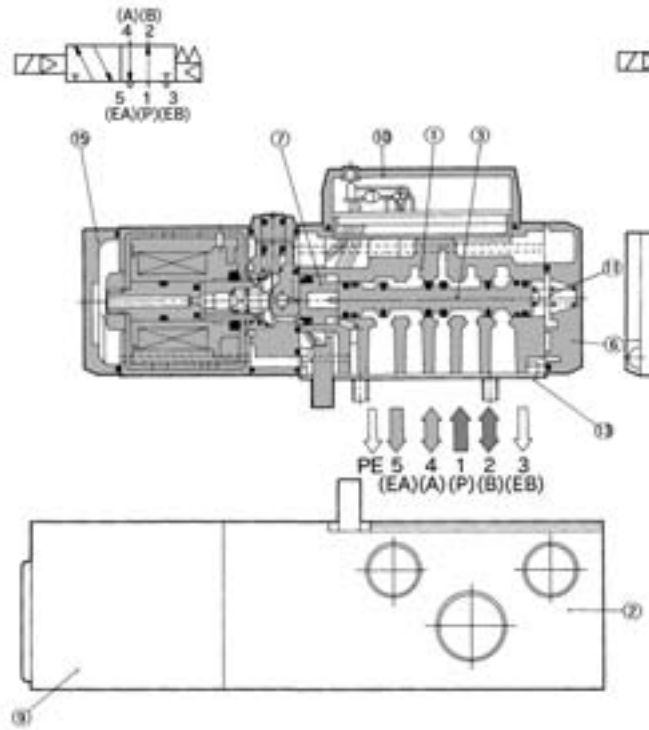

2 position double

VFR22□0

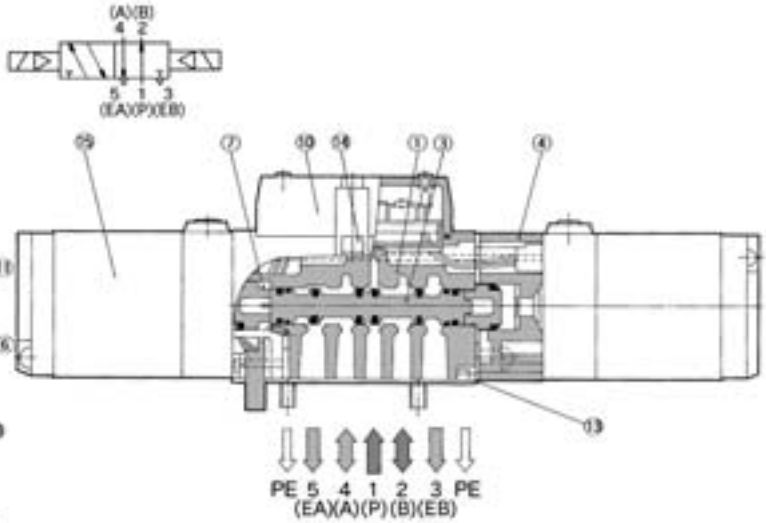

3 position closed center/exhaust center/pressure center

Closed center: VFR23□0

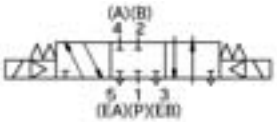

Exhaust center: VFR24□0

Pressure center: VFR25□0

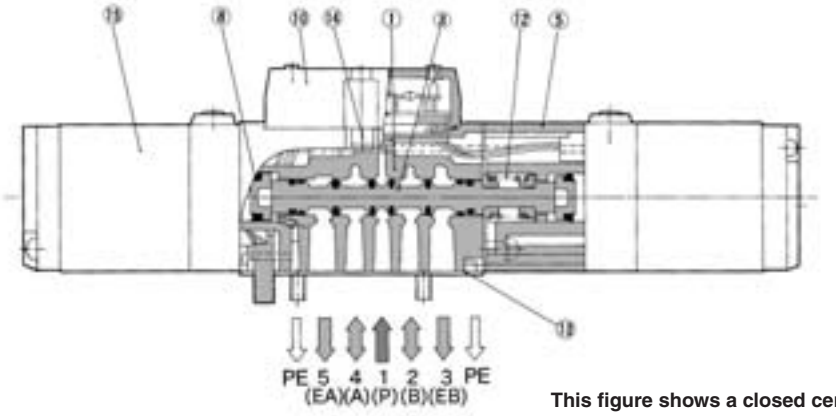

This figure shows a closed center type.

Component Parts

No.	Description	Material	Note
1	**Body**	Aluminum die-casted	Platinum silver
2	**Sub-plate**	Aluminum die-casted	Platinum silver
3	**Spool valve**	Aluminum, NBR	
4	**Adapter plate**	Aluminum die-casted	Platinum silver
5	**Adapter plate**	Aluminum die-casted	Platinum silver
6	**End plate**	Resin	Black

Component Parts

No.	Description	Material	Note
7	**Piston**	Resin	
8	**Piston**	Resin	
9	**Junction cover**	Resin	
10	**Light cover assembly**	Resin	
11	**Spool spring**	Stainless steel	
12	**Return spring**	Stainless steel	

Replacement Parts

No.	Description	Material	Part no.		
			VFR21□0	**VFR22□0**	**VFR23□0/24□0/25□0**
13	**Gasket**	NBR	AXT624-20-2	AXT624-20-2	AXT624-20-2
14	**Hexagon socket head screw**	Steel	AXT624-26 (M3 x 31)	AXT624-26 (M3 x 31)	AXT624-26 (M3 x 31)
15	**Pilot valve assembly**	—	Refer to “How to Order Pilot Valve Assembly” on page 1233.		
—	**Sub-plate assembly**	—	Refer to “How to Order Sub-plate Assembly” on page 1234.		

Plug-in: 2 Position Single/Double, 3 Position Closed Center/Exhaust Center/Pressure Center

2 position single: VFR2100-□F-$^{01}_{02}$

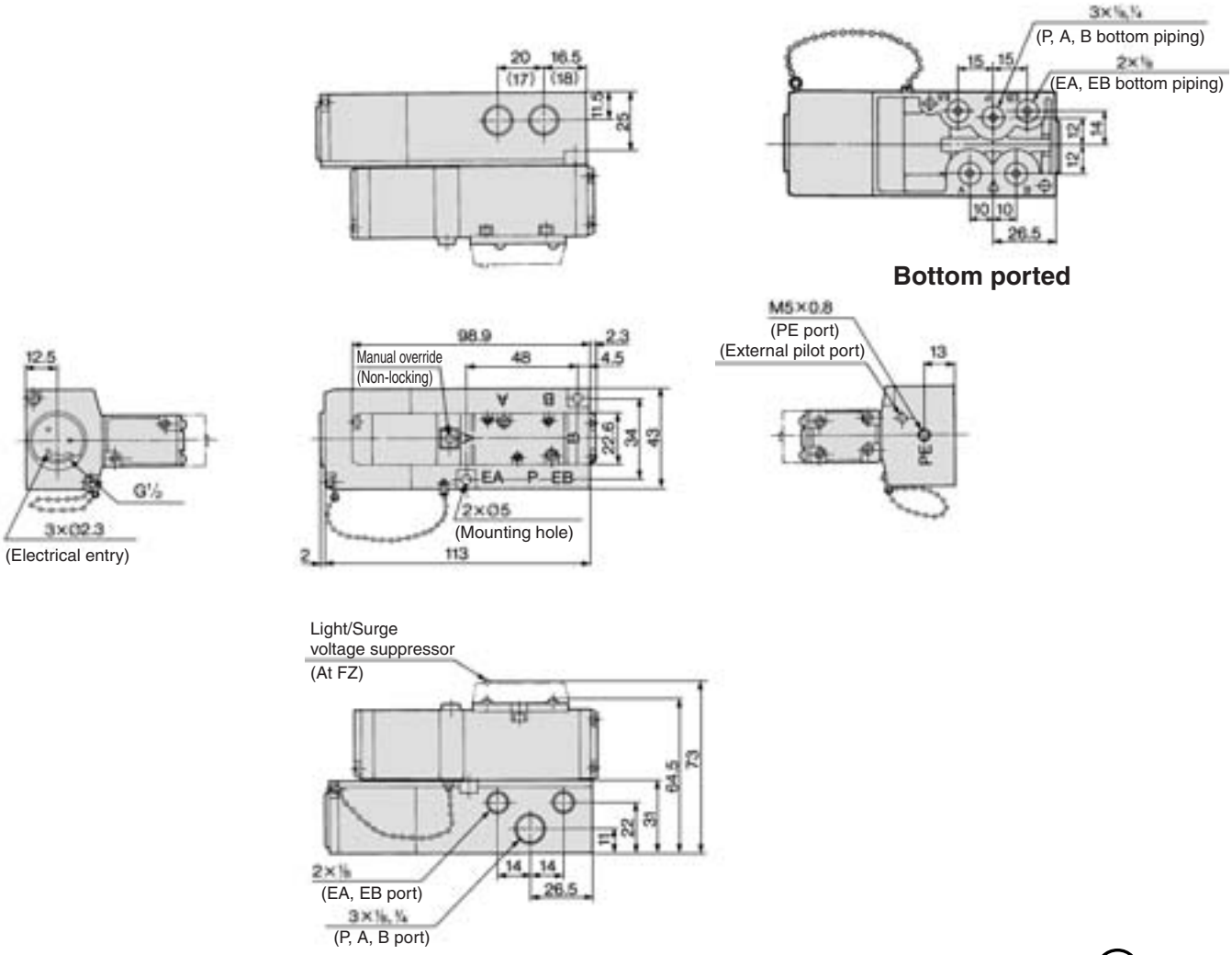

( ): Rc 1/8

2 position double: VFR2200-□F-$^{01}_{02}$

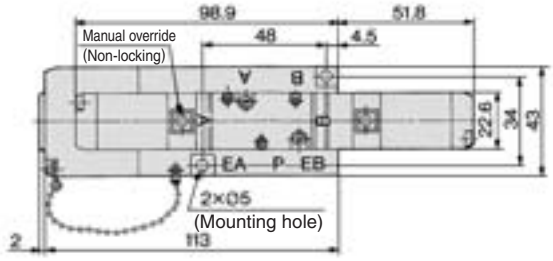

∗ Other dimensions are the same as the single type.

3 position closed center: VFR2300-□F-$^{01}_{02}$
3 position exhaust center: VFR2400-□F-$^{01}_{02}$
3 position pressure center: VFR2500-□F-$^{01}_{02}$

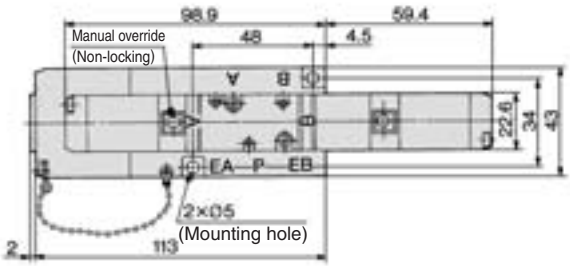

∗ Other dimensions are the same as the single type.

Non Plug-in: 2 Position Single

Grommet: VFR2110-□G-$^{01}_{02}$

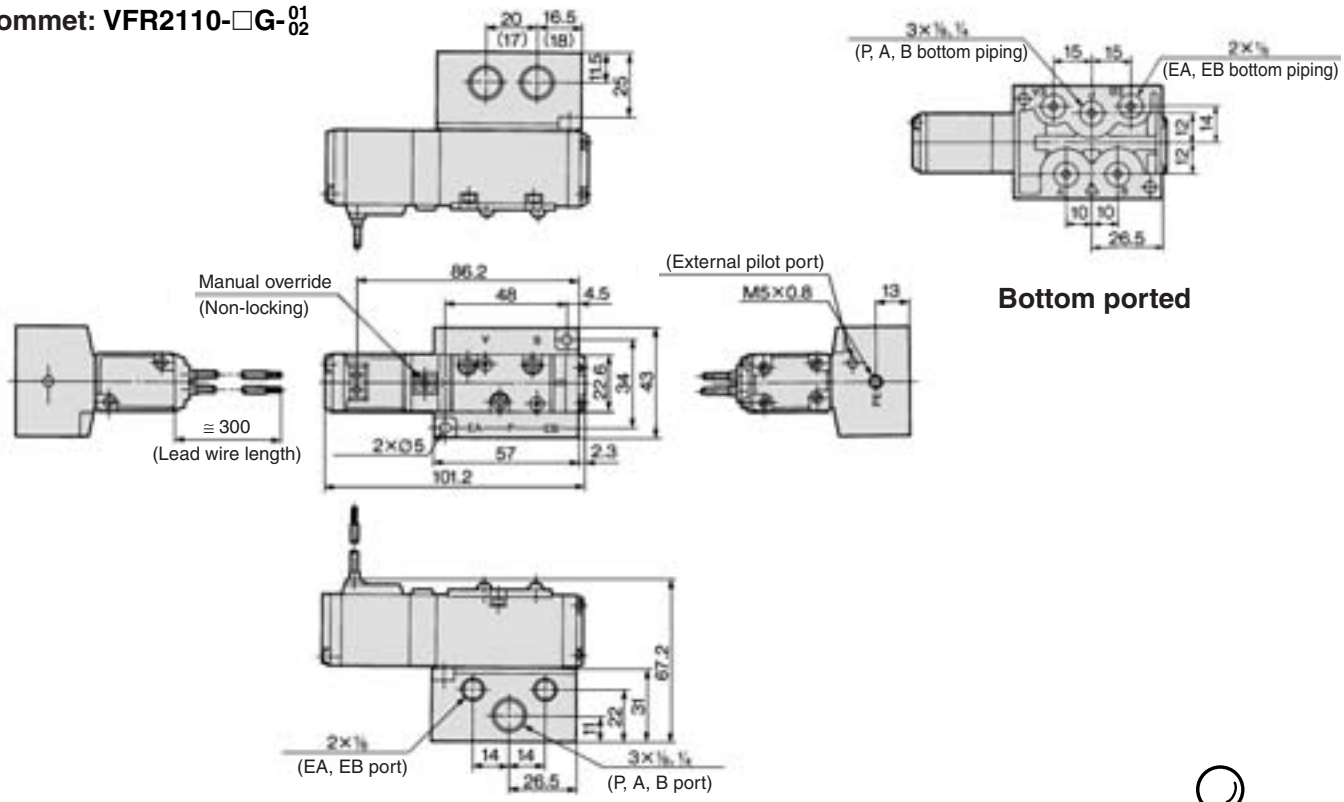

( ): Rc ⅛

Grommet terminal: VFR2110-□E-$^{01}_{02}$

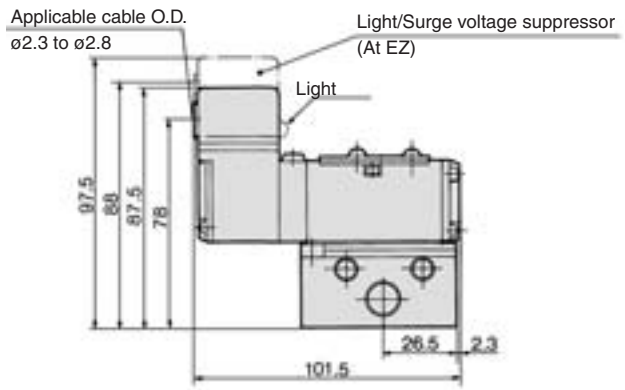

∗ Other dimensions are the same as the grommet type.

Conduit terminal: VFR2110-□T-$^{01}_{02}$

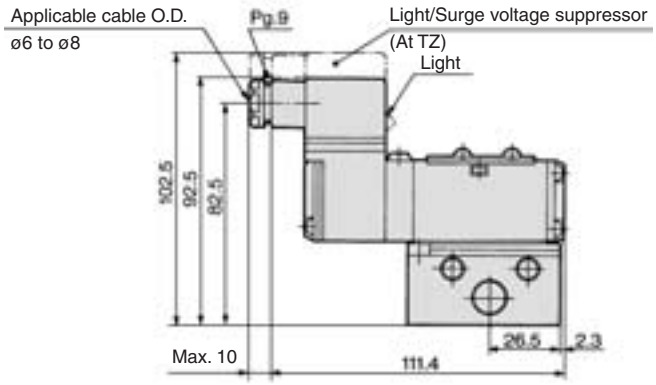

∗ Other dimensions are the same as the grommet type.

DIN terminal: VFR2110-□$^{D}_{Y}$-$^{01}_{02}$

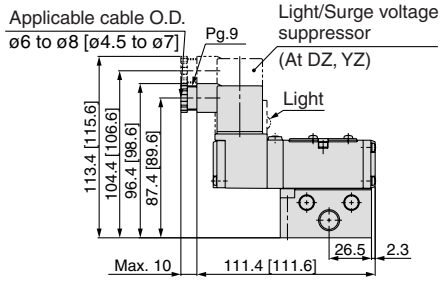

∗ [ ]: Type Y
∗ Other dimensions are the same as the grommet type.

L plug connector: VFR2110-□L-$^{01}_{02}$

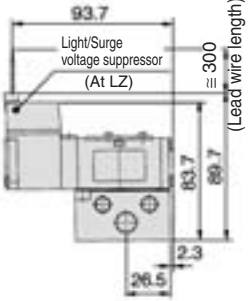

∗ Other dimensions are the same as the grommet type.

M plug connector: VFR2110-□M-$^{01}_{02}$

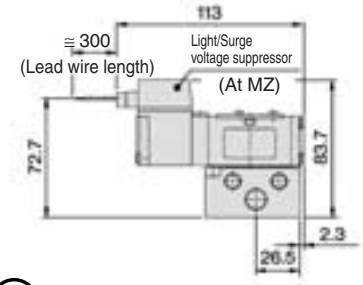

∗ Other dimensions are the same as the grommet type.

Non Plug-in: 2 Position Double

Grommet: VFR2210-□G-$^{01}_{02}$

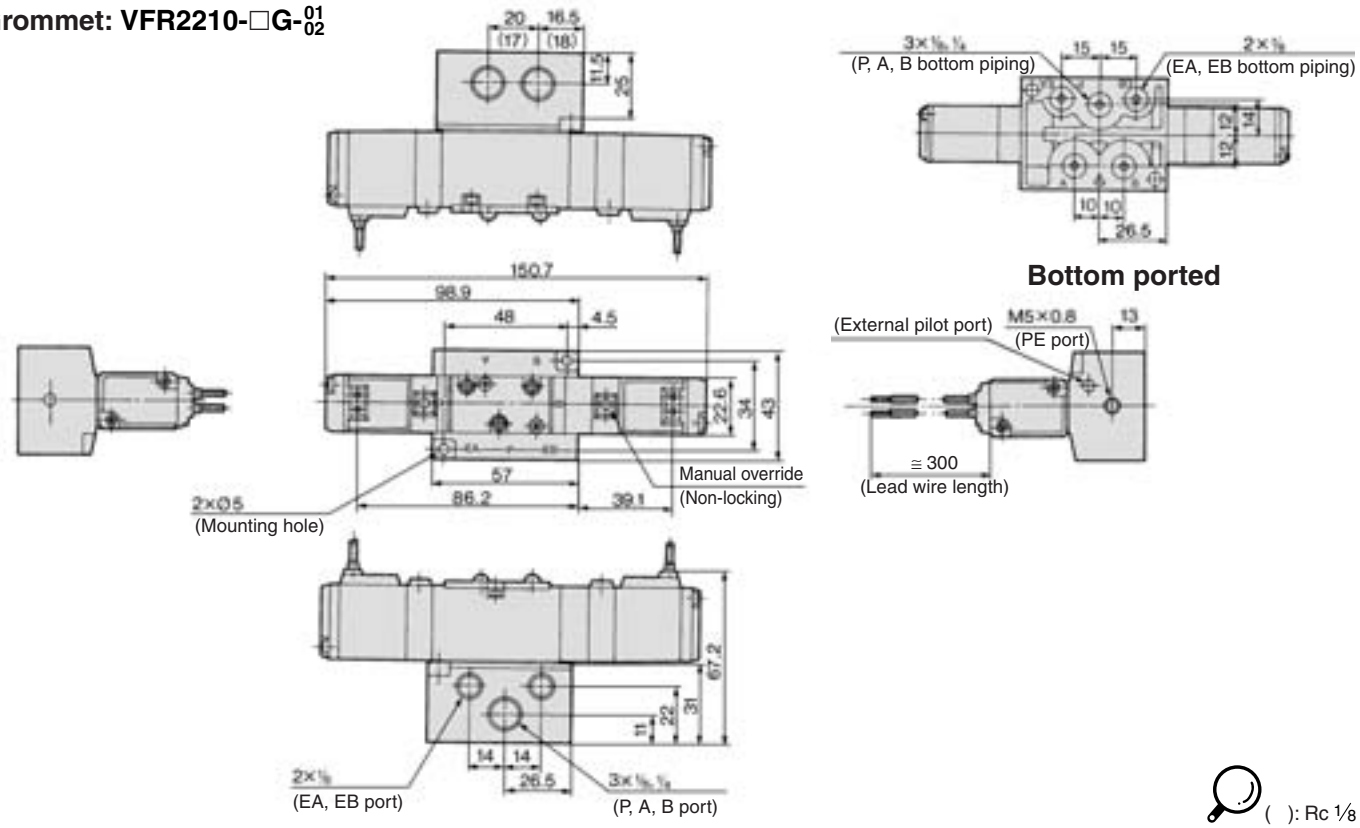

Grommet terminal: VFR2210-□E-$^{01}_{02}$

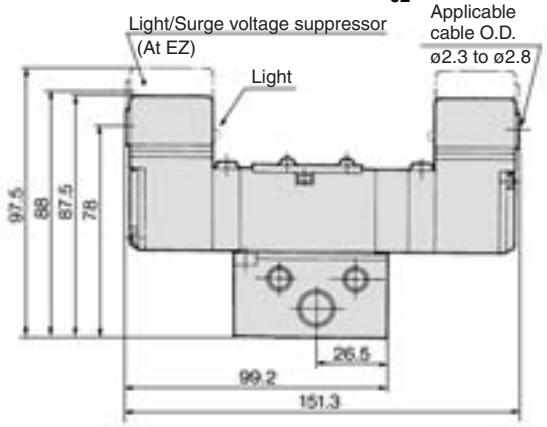

∗ Other dimensions are the same as the grommet type.

Conduit terminal: VFR2210-□T-$^{01}_{02}$

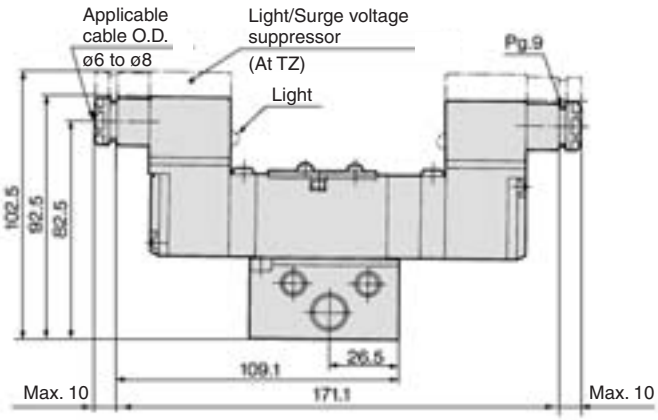

∗ Other dimensions are the same as the grommet type.

DIN terminal: VFR2210-□$^{D}_{Y}$-$^{01}_{02}$

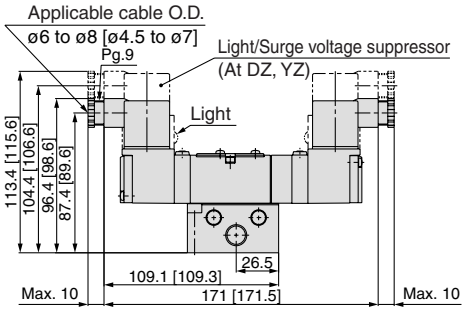

∗ [ ]: Type Y
∗ Other dimensions are the same as the grommet type.

L plug connector: VFR2210-□L-$^{01}_{02}$

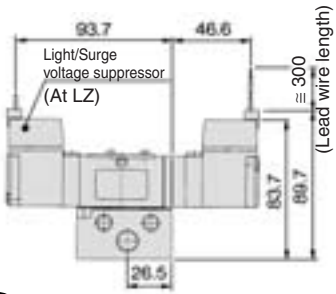

∗ Other dimensions are the same as the grommet type.

M plug connector: VFR2210-□M-$^{01}_{02}$

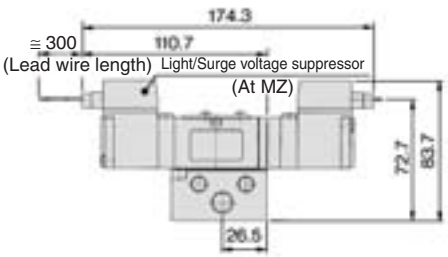

∗ Other dimensions are the same as the grommet type.

Non Plug-in: 3 Position Closed Center/Exhaust Center/Pressure Center

Grommet

Closed center: VFR2310-□G-$^{01}_{02}$
Exhaust center: VFR2410-□G-$^{01}_{02}$
Pressure center: VFR2510-□G-$^{01}_{02}$

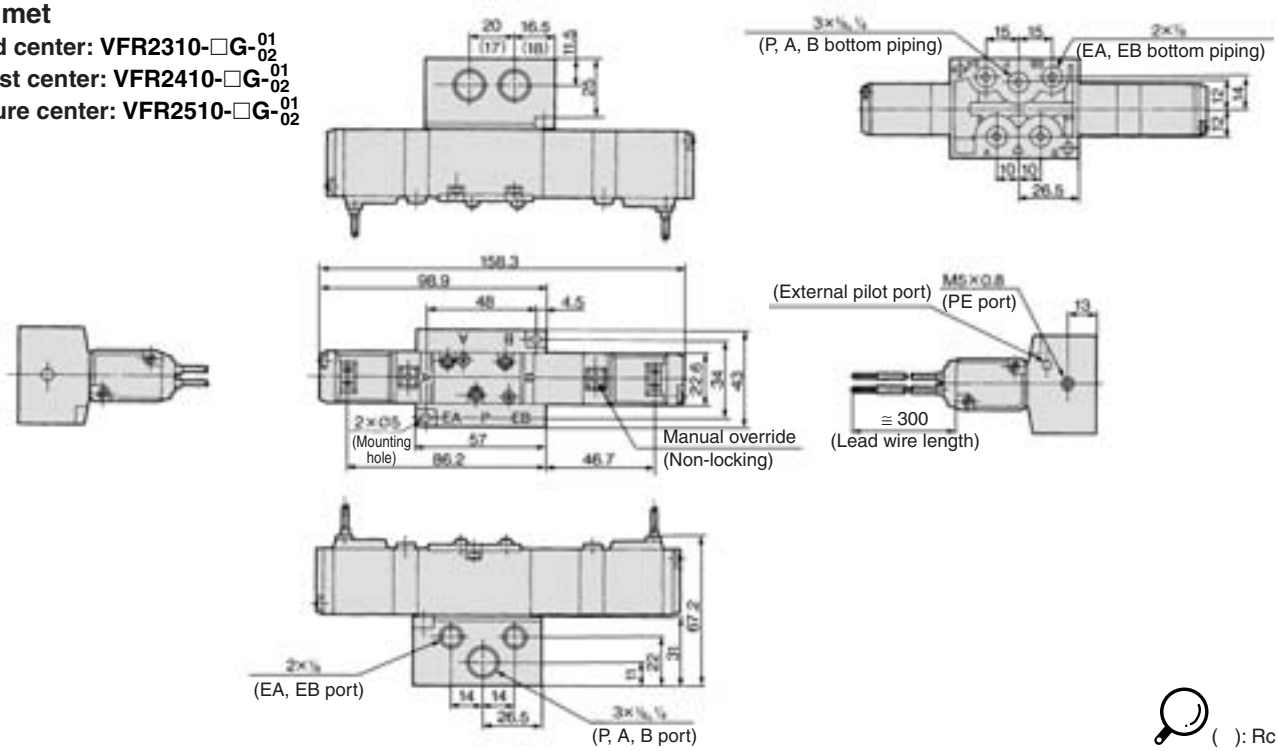

( ): Rc 1/8

Grommet terminal

Closed center: VFR2310-□E-$^{01}_{02}$
Exhaust center: VFR2410-□E-$^{01}_{02}$
Pressure center: VFR2510-□E-$^{01}_{02}$

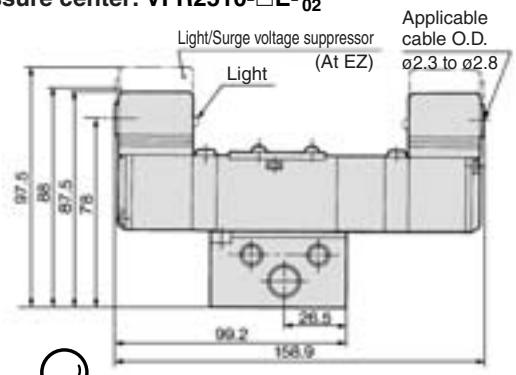

∗ Other dimensions are the same as the grommet type.

Conduit terminal

Closed center: VFR2310-□T-$^{01}_{02}$
Exhaust center: VFR2410-□T-$^{01}_{02}$
Pressure center: VFR2510-□T-$^{01}_{02}$

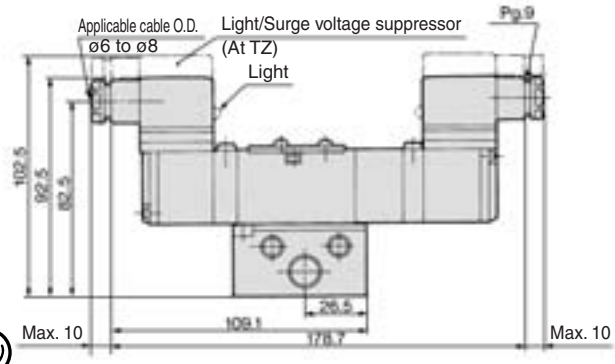

∗ Other dimensions are the same as the grommet type.

DIN terminal

Closed center: VFR2310-□$^{D}_{Y}$-$^{01}_{02}$
Exhaust center: VFR2410-□$^{D}_{Y}$-$^{01}_{02}$
Pressure center: VFR2510-□$^{D}_{Y}$-$^{01}_{02}$

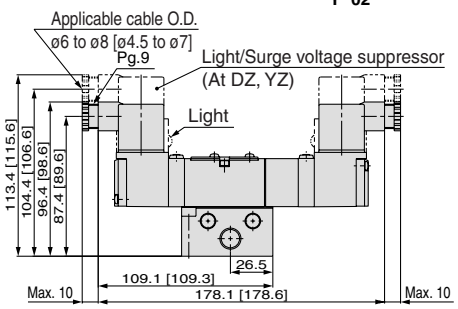

∗ [ ]: Type Y
∗ Other dimensions are the same as the grommet type.

L plug connector

Closed center: VFR2310-□L-$^{01}_{02}$
Exhaust center: VFR2410-□L-$^{01}_{02}$
Pressure center: VFR2510-□L-$^{01}_{02}$

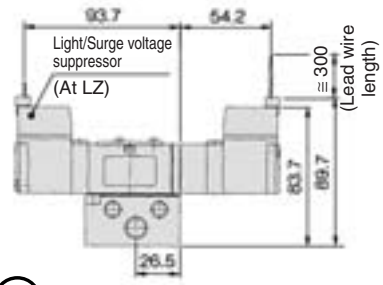

∗ [ ]: Type Y
∗ Other dimensions are the same as the grommet type.

M plug connector

Closed center: VFR2310-□M-$^{01}_{02}$
Exhaust center: VFR2410-□M-$^{01}_{02}$
Pressure center: VFR2510-□M-$^{01}_{02}$

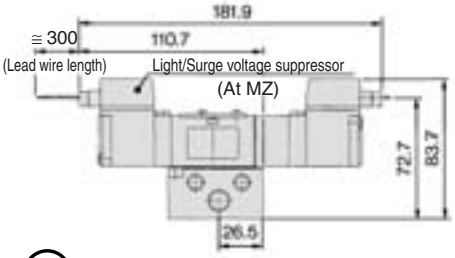

∗ [ ]: Type Y
∗ Other dimensions are the same as the grommet type.

Manifold Specifications

Manifold Specifications

Base model	Wiring	Porting specifications	Port size		Stations	Applicable valve model
		A, B port	P, EA, EB	A, B		
Plug-in type **VV5FR2-01□(-Q)**	• With terminal block	Side/Bottom Note)	¼	⅛, ¼ C6, C8	2 to 15	VFR2□00-□F(-Q)
	• With multi-connector • With D-sub connector				2 to 8	
Non plug-in type **VV5FR2-10(-Q)**	• Grommet • Grommet terminal • Conduit terminal • DIN terminal • L plug connector • M plug connector				2 to 15	VFR2 10-□G VFR2□10-□E VFR2□10-□T VFR2□10-□D(-Q) VFR2□10-□L VFR2□10-□M

Note) Side ported and bottom ported cannot be taken at the same time.

How to Order Manifold Assembly

<Example> Plug-in type with terminal block (6 stations, one-piece junction cover)

VV5FR2-01T1-061-02 ..... **1 set (Manifold base part no.)**
***VFR2100-5FZ** ..... **3 sets (2 position single part no.)**
***VFR2200-5FZ** ..... **2 sets (2 position double part no.)**
***VVFS2000-10A** ..... **1 set (Blanking plate assembly part no.)**
→ The asterisk denotes the symbol for assembly. Prefix it to the part nos. of the solenoid valve, etc.

Valve arrangement is counted from the D side.
When ordering, specify the part nos. in order from the 1st. station in the D side.
When entry of part numbers becomes complicated, indicate on the manifold specification sheet.

<Example> Non plug-in type: 6 stations

VV5FR2-10-061-01 ..... **1 set (Manifold base part no.)**
***VFR2110-5D** ..... **5 sets (2 position single part no.)**
***VFR2410-5D** ..... **1 set (3 position exhaust part no.)**
***VVFS2000-R-01-2** ..... **1 set (Individual EXH spacer part no.)**
→ The asterisk denotes the symbol for assembly. Prefix it to the part nos. of the solenoid valve, etc.

Valve arrangement is counted from the D side.
When ordering, specify the part nos. in order from the 1st. station in the D side.
When entry of part numbers becomes complicated, indicate on the manifold specification sheet.

Plug-in Type: With Terminal Block

- **Since lead wires of solenoid valve are connected with the terminals on upper surface of terminal block corresponding lead wires from power source can be wired at the bottom of terminal block.**

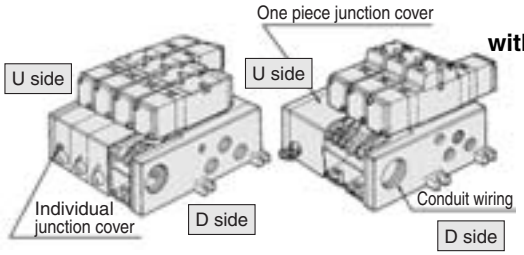

Note) P port or EA/EB port of symbol "3" to "8" can be individual port with block plate. Therefore, if using individual SUP spacer or individual EXH spacer for individual port, its symbol is "1".

VV5FR2 − 01T 1 − 08 1 − 02 □ − □

Series VFR2000 Manifold

Plug-in type with terminal block

Junction cover

Nil	Individual junction cover
1	One-piece junction cover

Stations

02	2 stations
⋮	⋮
15	15 stations

Symbol

Symbol	Passage P	Passage EA, EB	Porting specification A, B
1	Common	Common	Side
2 *			Bottom
3 *	Common	Individual	Side
4 *			Bottom
5 *	Individual	Common	Side
6 *			Bottom
7 *	Individual	Individual	Side
8 *			Bottom

* Option
When an individual passage is used, P, EA and EB ports will be bottom ported.

Port size

Symbol	P, EA, EB *	A, B *
01	¼	⅛
02		¼
C6		One-touch fitting for ø6
C8		One-touch fitting for ø8
M		Mixed

* For bottom ported, 1/8 is only available.

Thread type

Nil	Rc
F	G
N	NPT
T	NPTF

CE-compliant

Nil	—
Q	CE-compliant

Plug-in Type: With Multi-connector (For wiring specifications, refer to page 1326.)

- **Master connection of power and solenoid valves.**
- **Quick wiring permits ease of installation.**

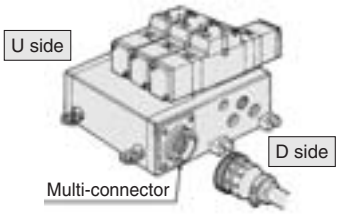

Note) P port or EA/EB port of symbol "3" to "8" can be individual port with block plate. Therefore, if using individual SUP spacer or individual EXH spacer for individual port, its symbol is "1".

VV5FR2 − 01C D 1 − 05 1 − 01 □ − □

Series VFR2000 Manifold

Plug-in type with multi-connector

Connector mounting direction

D	D side mounting
U	U side mounting

Junction cover

1	One-piece junction cover

Stations

02	2 stations
⋮	⋮
08	8 stations

* Max. 8 stations

Symbol

Symbol	Passage P	Passage EA, EB	Porting specification A, B
1	Common	Common	Side
2 *			Bottom
3 *	Common	Individual	Side
4 *			Bottom
5 *	Individual	Common	Side
6 *			Bottom
7 *	Individual	Individual	Side
8 *			Bottom

* Option
When an individual passage is used, P, EA and EB ports will be bottom ported.

Port size

Symbol	P, EA, EB *	A, B *
01	¼	⅛
02		¼
C6		One-touch fitting for ø6
C8		One-touch fitting for ø8
M		Mixed

* For bottom ported, 1/8 is only available.

Thread type

Nil	Rc
F	G
N	NPT
T	NPTF

CE-compliant

Nil	—
Q	CE-compliant

Plug-in Type: With D-sub Connector (For wiring specifications, refer to page 1326.)

- **Wide range of interchangeability (D-sub connector (25P) conforming to MIL standard)**
- **Quick wiring permits easier installation.**

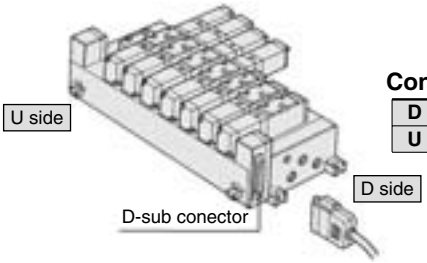

VV5FR2 – 01F U 1 – 06 1 – 01 ☐ – ☐

Series VFR2000 Manifold

Plug-in type with D-sub connector

Connector mounting direction

D	D side mounting
U	U side mounting

Junction cover

1	One-piece junction cover

Stations

02	2 stations
⋮	⋮
08	8 stations

∗ Max. 8 stations

Symbol

Symbol	Passage P	Passage EA, EB	Porting specification A, B
1	Common	Common	Side
2 ∗			Bottom
3 ∗	Common	Individual	Side
4 ∗			Bottom
5 ∗	Individual	Common	Side
6 ∗			Bottom
7 ∗	Individual	Individual	Side
8 ∗			Bottom

∗ Option
When an individual passage is used, P, EA and EB ports will be bottom ported.

Thread type

Nil	Rc
F	G
N	NPT
T	NPTF

Port size

Symbol	P, EA, EB ∗	A, B ∗
01	1/4	1/8
02		1/4
C6		One-touch fitting for ø6
C8		One-touch fitting for ø8
M		Mixed

∗ For bottom ported, 1/8 is only available.

CE-compliant

Nil	—
Q	CE-compliant

Note) P port or EA/EB port of symbol "3" to "8" can be individual port with block plate.
Therefore, if using individual SUP spacer or individual EXH interface for individual port, its symbol is "1".

Non Plug-in Type: Grommet, Grommet Terminal, Conduit Terminal, DIN Terminal

- **Wiring for every valve**

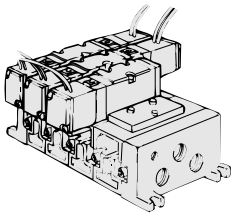

VV5FR2 – 10 – 05 1 – 01 ☐ – ☐

Series VFR2000 Manifold

Non plug-in type

Stations

02	2 stations
⋮	⋮
15	15 stations

Symbol

Symbol	Passage P	Passage EA, EB	Porting specification A, B
1	Common	Common	Side
2 ∗			Bottom
3 ∗	Common	Individual	Side
4 ∗			Bottom
5 ∗	Individual	Common	Side
6 ∗			Bottom
7 ∗	Individual	Individual	Side
8 ∗			Bottom

∗ Option
When an individual passage is used, P, EA and EB ports will be bottom ported.

Port size

Symbol	P, EA, EB ∗	A, B ∗
01	1/4	1/8
02		1/4
C6		One-touch fitting for ø6
C8		One-touch fitting for ø8
M		Mixed

∗ For bottom ported, 1/8 is only available.

Thread type

Nil	Rc
F	G
N	NPT
T	NPTF

CE-compliant

Nil	—
Q	CE-compliant

Note) P port or EA/EB port of symbol "3" to "8" can be individual port with block plate.
Therefore, if using individual SUP spacer or individual EXH spacer for individual port, its symbol is "1".

Manifold/Option Parts Assembly

Individual SUP spacer
Setting individual SUP spacer on the manifold block enables individual SUP port for each valve.

Body type		Plug-in type	Non plug-in type
Part no.	Rc1/8	VVFS2000-P-01-1	VVFS2000-P-01-2
	Rc1/4	VVFS2000-P-02-1	VVFS2000-P-02-2

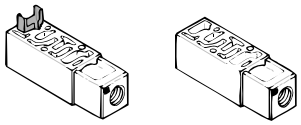

Individual EXH spacer
Setting individual EXH spacer on the manifold block enables individual EXH port for each valve.

Body type		Plug-in type	Non plug-in type
Part no.	Rc1/8	VVFS2000-R-01-1	VVFS2000-R-01-2
	Rc1/4	VVFS2000-R-02-1	VVFS2000-R-02-2

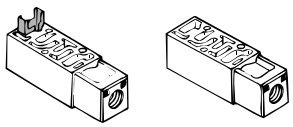

SUP block disk
When supplying manifold with more than two different kinds of pressure, high and low, insert a block disk in between stations subjected to different pressures.

Body type	Plug-in type	Non plug-in type
Part no.	AXT625-12A	

EXH block disk
When valve exhaust affects the other stations in the circuit, insert EXH block disk in between stations to separate valve exhaust.

Body type	Plug-in type	Non plug-in type
Part no.	AXT625-12A	

Throttle valve spacer
Needle valve set on the manifold block can control cylinder speed by throttling exhaust.

Body type	Plug-in type	Non plug-in type
Part no.	VVFS2000-20A-1	VVFS2000-20A-2

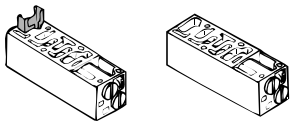

Interface regulator
Interface regulator set on the manifold block can regulate pressure for each valve. (Refer to "Flow Characteristics" on page 1324 before operation.)

Body type	Plug-in type	Non plug-in type
P port regulation	ARBF2000-00-P-1	ARBF2000-00-P-2

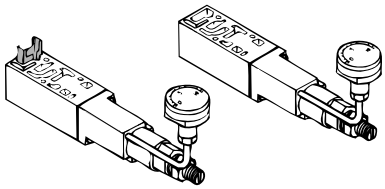

Air release valve spacer
Valve VFR21□0 (single) can be used as air release valve by combining with release valve spacer.

Body type	Plug-in type	Non plug-in type
Part no.	VVFS2000-24A-1 L/R	VVFS2000-24A-2 L/R

Note) L: U side mount R: D side mount

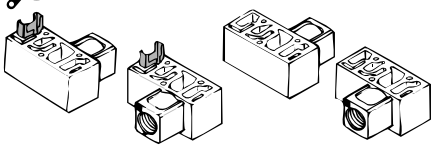

SUP stop valve spacer Note)
If SUP stop valve spacer is set, valve can be removed for maintenance without stopping air pressure supply for other valves.

Body type	Plug-in type	Non plug-in type
Part no.	VVFS2000-37A-1	VVFS2000-37A-2

(Height will be 23.2 mm higher.)

Note) Used with manifold base.
Please contact SMC for details.

Blanking plate
It is used by attaching on the manifold block for being prepared for removing a valve for maintenance reasons or planning to mount a spare valve, etc.

Body type	Plug-in type	Non plug-in type
Part no.	VVFS2000-10A	

Manifold Option

With control unit
Plug-in/Non Plug-in type
- Filter, regulation valve, pressure switch and air release valve all combine to form one unit.
- Piping processes are eliminated.

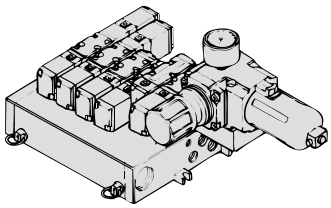

For details, refer to page 1247.

Manifold/Plug-in Type

With terminal block (Individual junction cover): VV5FR2-01T- Station 1- Port size

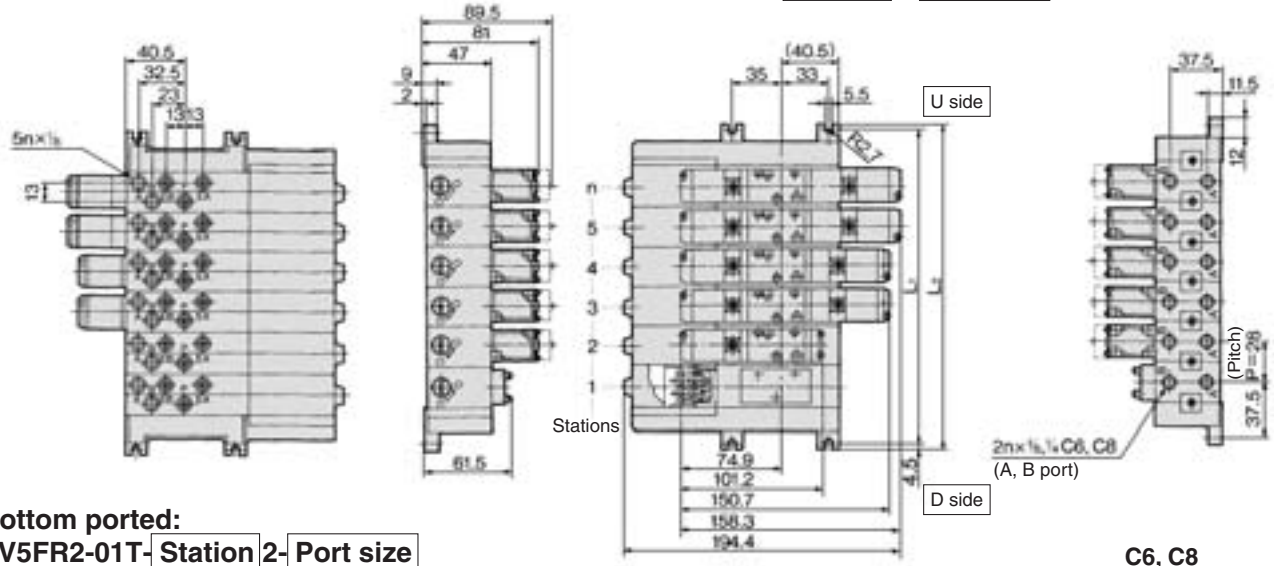

Bottom ported: VV5FR2-01T- Station 2- Port size

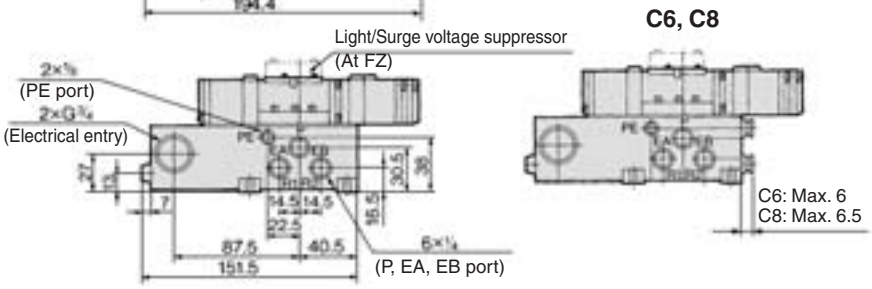

With terminal block (One-piece junction cover): VV5FR2-01T1- Station 1- Port size

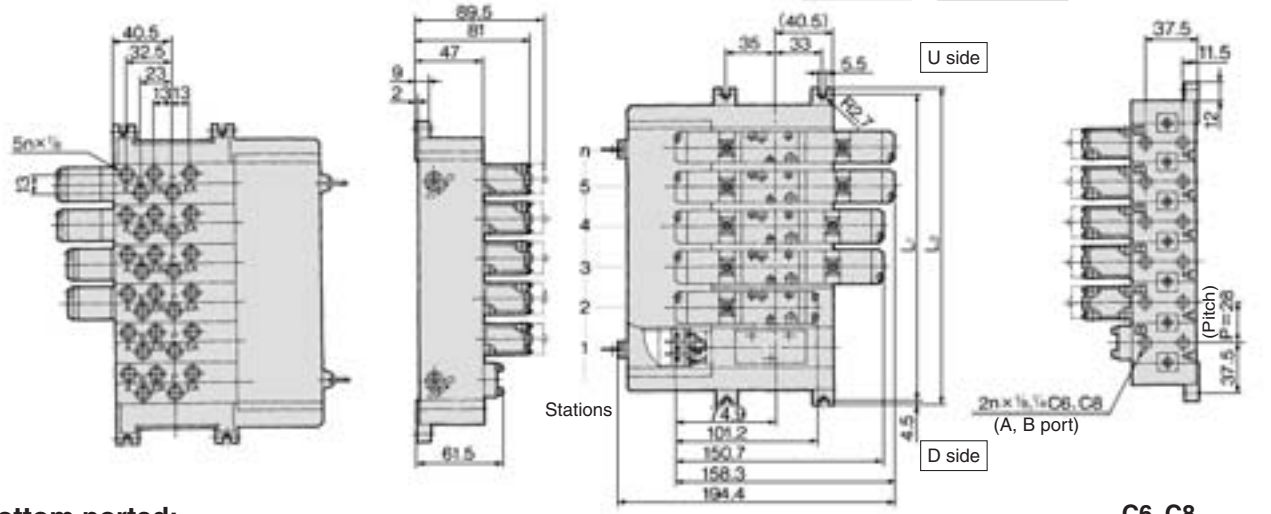

Bottom ported: VV5FR2-01T1- Station 2- Port size

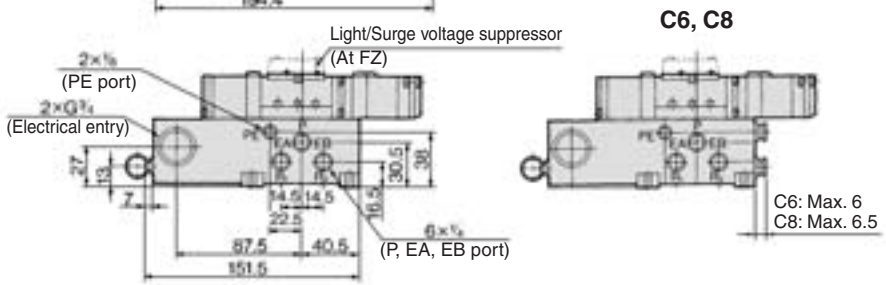

n: Stations

L \ Stations	1	2	3	4	5	6	7	8	9	10	Formula
L_1	75	103	131	159	187	215	243	271	299	327	$L_1 = 28 \times n + 47$
L_2	84	112	140	168	196	224	252	280	308	336	$L_2 = 28 \times n + 56$

Manifold/Plug-in Type

With multi-connector: VV5FR2-01CD1-Station 1-Port size, VV5FR2-01CU1-Station 1-Port size

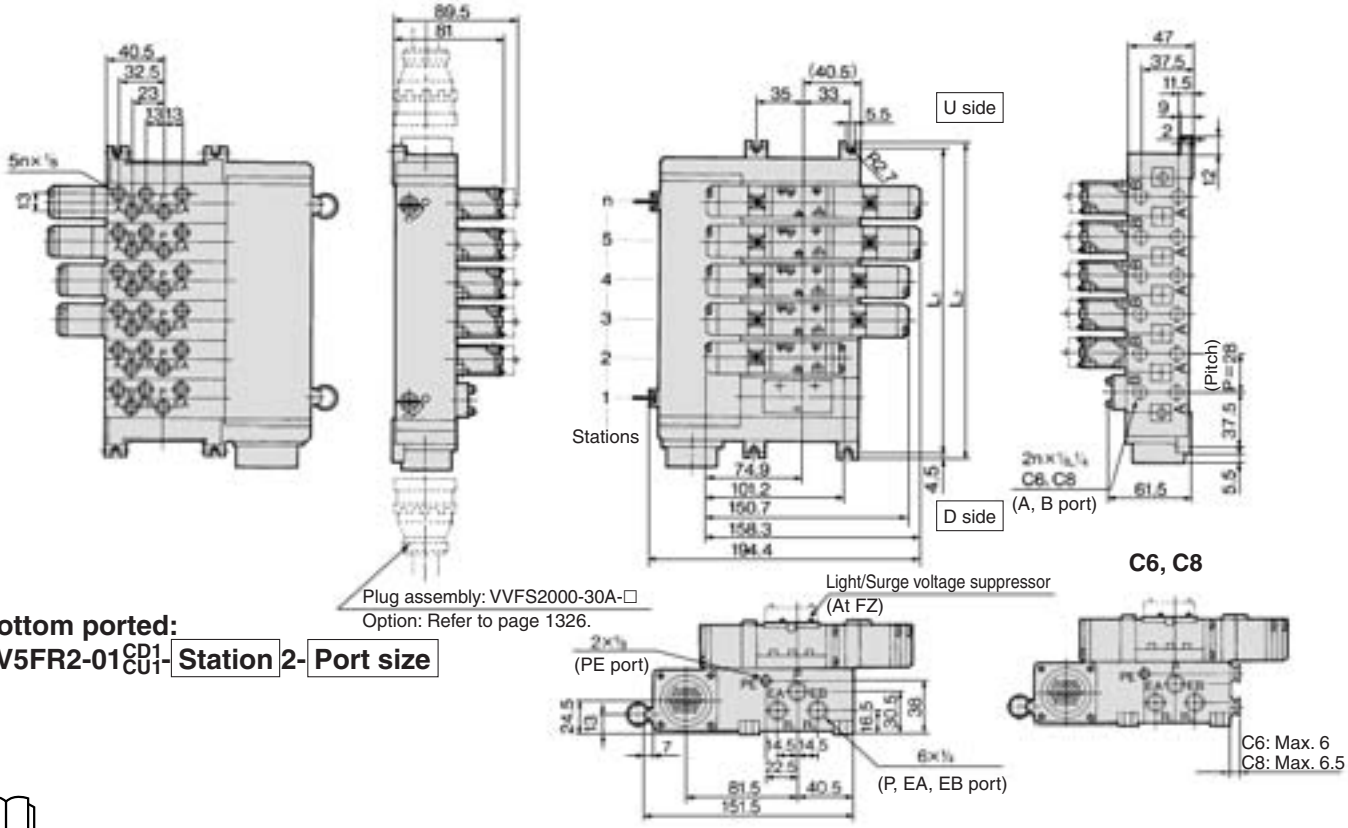

Bottom ported:
VV5FR2-01CD1/CU1-Station 2-Port size

For wiring specifications, refer to page 1326.

With D-sub connector: VV5FR2-01FD1-Station 1-Port size, VV5FR2-01FU1-Station 1-Port size

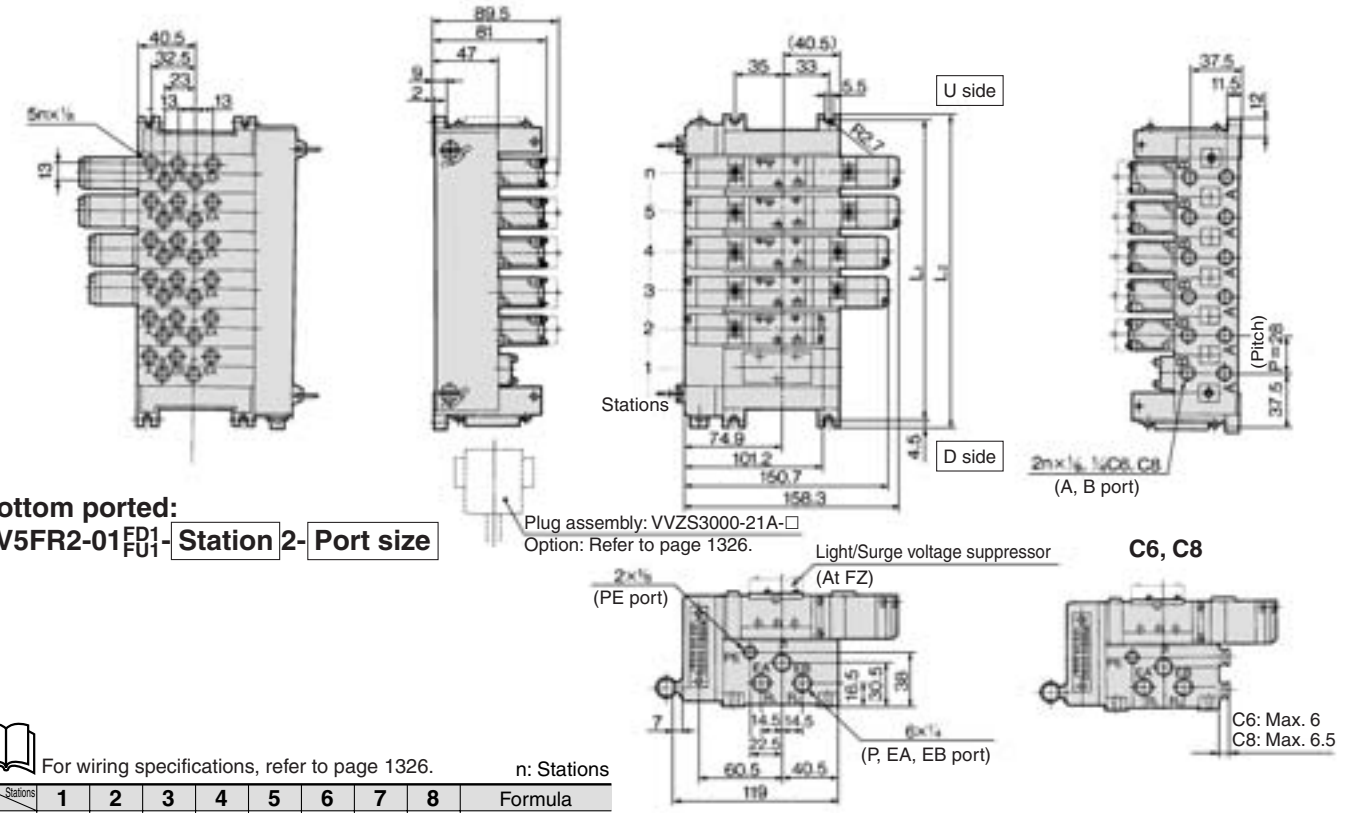

Bottom ported:
VV5FR2-01FD1/FU1-Station 2-Port size

For wiring specifications, refer to page 1326.

n: Stations

L \ Stations	1	2	3	4	5	6	7	8	Formula
L_1	75	103	131	159	187	215	243	271	$L_1 = 28 \times n + 47$
L_2	84	112	140	168	196	224	252	280	$L_2 = 28 \times n + 56$

Manifold/Non plug-in type: VV5FR2-10-Station 1-Port size

Grommet: G

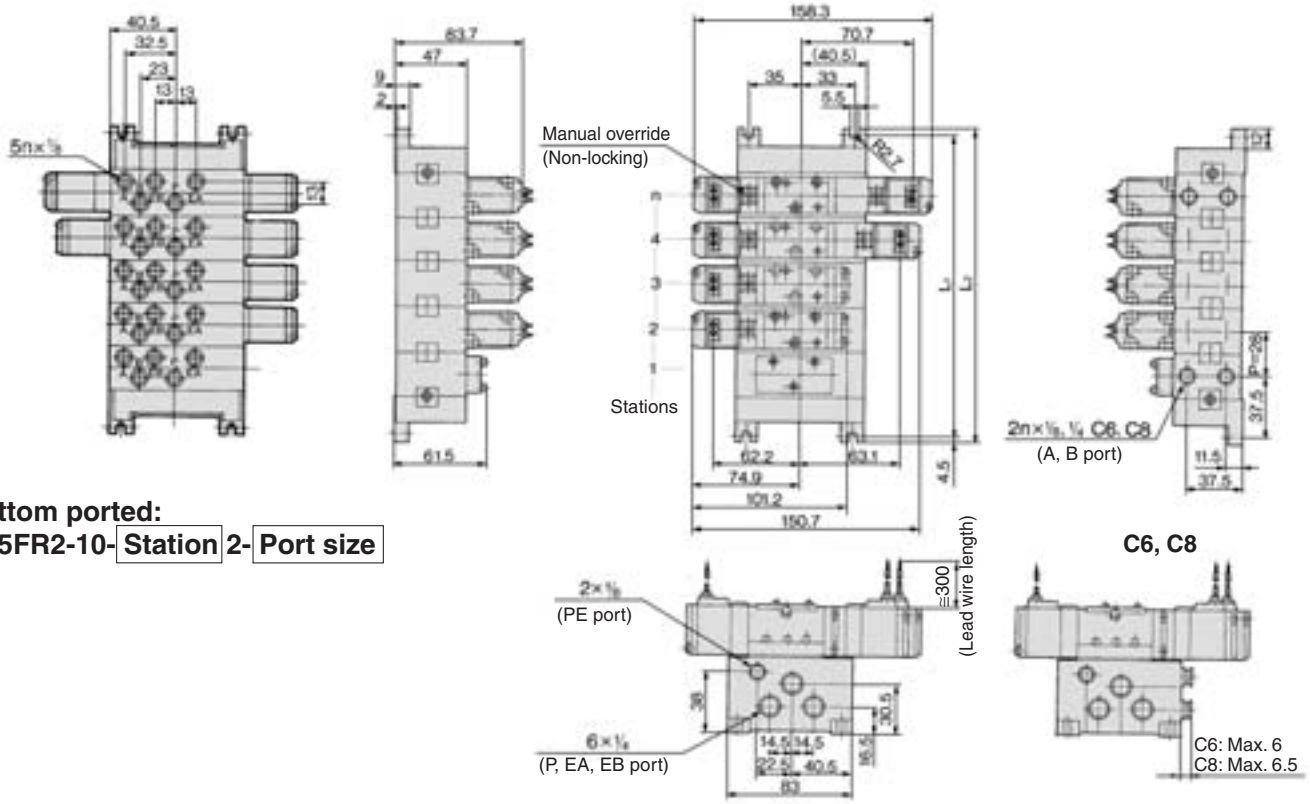

Bottom ported:
VV5FR2-10-Station 2-Port size

Grommet terminal: E

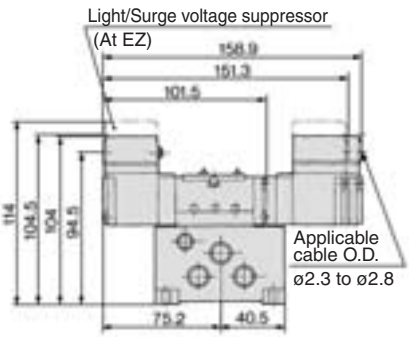

Conduit terminal: T

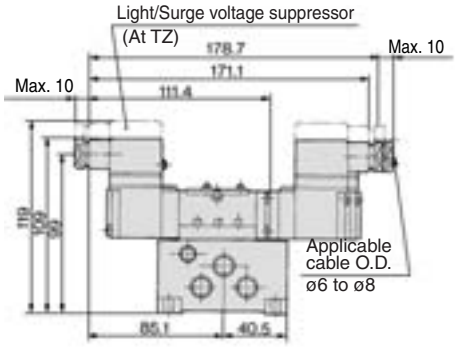

DIN terminal: D, Y

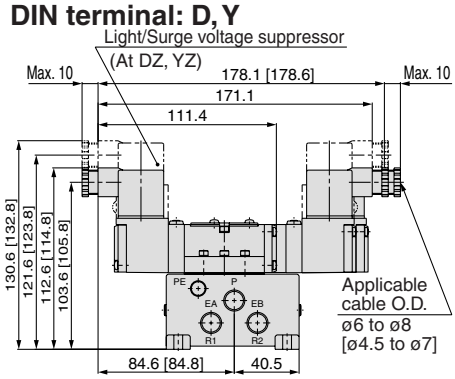

* [ ]: Type Y

L plug connector: L

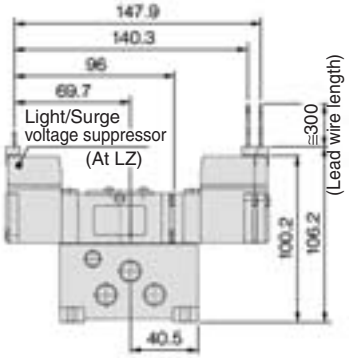

M plug connector: M

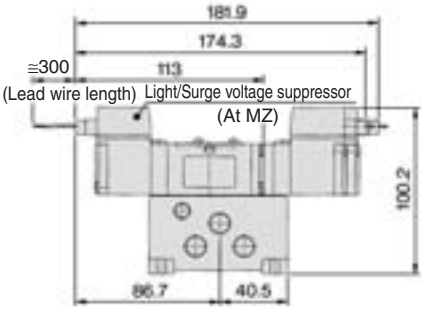

n: Stations

L \ Stations	1	2	3	4	5	6	7	8	9	10	Formula
L_1	75	103	131	159	187	215	243	271	299	327	$L_1 = 28 \times n + 47$
L_2	84	112	140	168	196	224	252	280	308	336	$L_2 = 28 \times n + 56$

Manifold/Option Parts Assembly: Plug-in Type/Non Plug-in Type

Individual SUP spacer:
VVFS2000-P-$^{01}_{02}$-1 (Plug-in type)
VVFS2000-P-$^{01}_{02}$-2 (Non plug-in type)

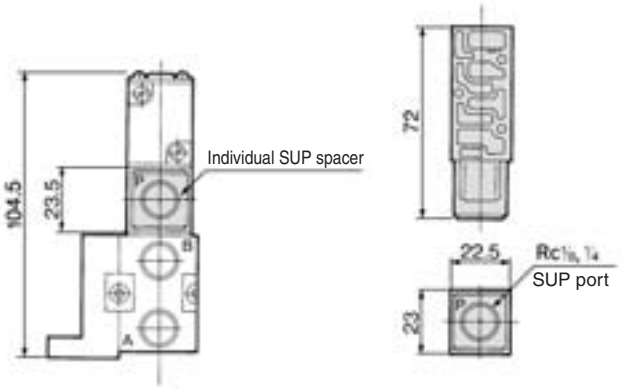

Throttle valve spacer:
VVFS2000-20A-1 (Plug-in type)
VVFS2000-20A-2 (Non plug-in type)

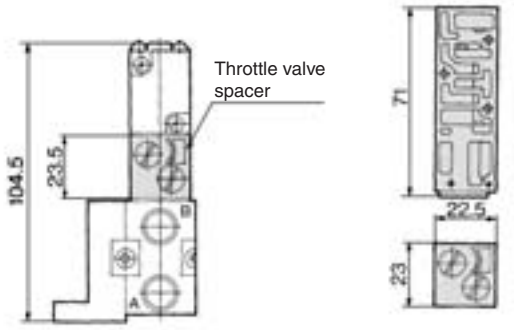

Individual EXH spacer:
VVFS2000-R-$^{01}_{02}$-1 (Plug-in type)
VVFS2000-R-$^{01}_{02}$-2 (Non plug-in type)

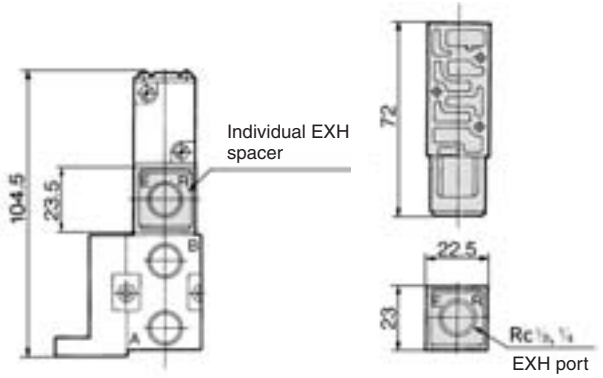

SUP block disk: AXT625-12A
EXH block disk: AXT625-12A

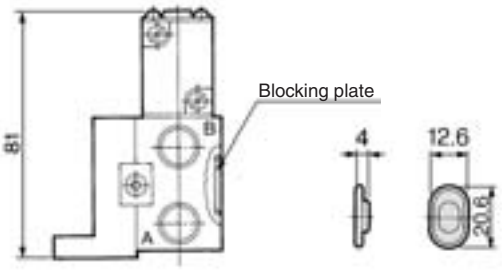

Interface regulator
ARBF2000-00-P-1 (Plug-in type)
ARBF2000-00-P-2 (Non plug-in type)

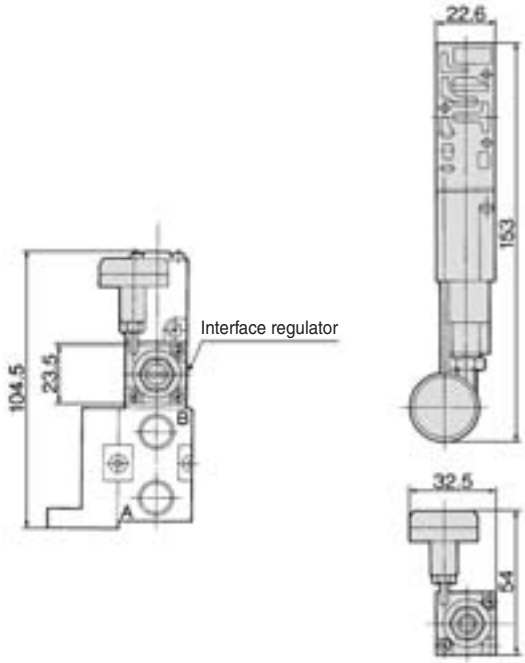

Release valve spacer
VVFS2000-24A-1$^{R}_{L}$ (Plug-in type)
VVFS2000-24A-2$^{R}_{L}$ (Non plug-in type)

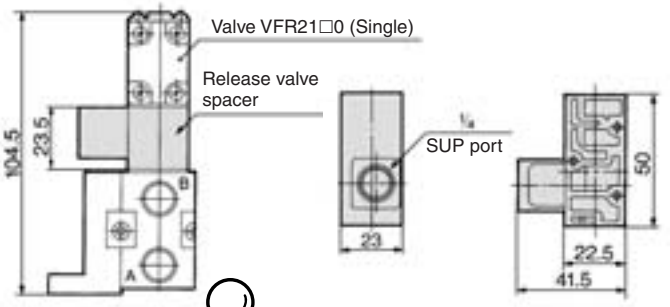

Note) VVFS2000-24A-1/2R (D side mounting)

Manifold with Control Unit

- **Control unit (Filter, Regulator, Pressure switch, Air release valve) are all standardized to the one unit, and can be mounted on the manifold base without any attachments.**
- **Piping processes are eliminated.**

Plug-in type

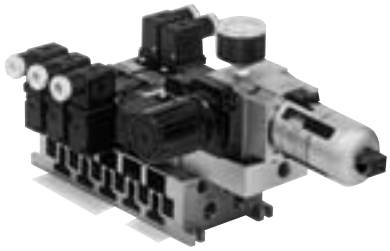

Non plug-in type

⚠ Caution

Air filter with auto-drain or manual drain must be mounted with the air filter at the bottom.

Manifold Specifications

Manifold	Plug-in type: **VV5FR2-01□(-Q)**		Non plug-in type: **VV5FR2-10(-Q)**
Wiring	With terminal block With multi-connector With D-sub connector		Grommet, Grommet terminal Conduit terminal, DIN terminal L plug connector, M plug connector
Applicable valve model	VFR2□00-□F(-Q)		VFR2□10-□G, VFR2□10-□E VFR2□10-□T,VFR2□10-□DY(-Q) VFR2□10-□L,VFR2□10-□M
Porting specifications Rc	Common SUP, Common EXH		
	A, B port	Side: Rc 1/8, 1/4, C6, C8, Bottom: Rc 1/8 (Option)	
	P, EA, EB port	Side: Rc 1/4, Bottom: Rc 1/8 (Option)	
Stations	2 to 15 stations * (With multi-connector/D-sub connector: 2 to 8 stations)		

* Including station of control unit

Control Unit Specifications

Air filter (With auto-drain/With manual drain)	
Filtration degree	5 μm
Regulator	
Set pressure (Outlet pressure)	0.05 to 0.85 MPa
Pressure switch	
Set pressure range: OFF	0.1 to 0.6 MPa
Differential	0.08 MPa
Contact	1a
Indicator light	LED (RED)
Max. switch capacity	2 VA AC, 2 W DC
Max. operating current	24 VAC, DC or less: 50 mA 100 VAC, DC: 20 mA
Inside voltage drop	4 V or less
Air release valve (Single only)	
Operating pressure range	0.2 to 0.9 MPa

Control Unit/Option

Air release valve spacer (1)	<Plug-in type> VVFS2000-24A-1R (D side mounting) VVFS2000-24A-1L (U side mounting)	
	<Non plug-in type> VVFS2000-24A-2R (D side mounting) VVFS2000-24A-2L (U side mounting)	
Pressure switch (2)	IS1000P-2-1	
Blanking plate	For filter regulator	MP2-2
	For pressure switch	MP3-2
	For air release valve	AXT625-18A
Filter element	111511-5B	

Note 1) Refer to "Manifold Option" on page 1246.
Note 2) Pressure switch cannot be mounted later on non plug-in type.

How to Order

VV5FR2 – 10 – 08 1 – 01 ☐ – AP ☐ – ☐

Series VFR2000 Manifold

Base model

Symbol	Electrical entry	Connector mounting direction	Junction cover
01T	Plug-in type terminal block	—	Stacking type
01T1			Integrated type
01CD1	Plug-in type multi-connector	D side	Integrated type
01CU1		U side	
01FD1	Plug-in type D-sub connector	D side	Integrated type
01FU1		U side	
10	Non plug-in type	—	—

Stations

02	2 stations
⋮	⋮
15 Note)	15 stations

Note) • 01CD1, 01CU1, 01FD1, 01FU1: Max. 8 stations
• 01T, 01T1, 10: Max. 15 stations
• Including station of control unit

Symbol

Symbol	Passage		Porting specifications
	P	EA, EB	(A, B)
1	Common	Common	Side
2 *			Bottom
3 *	Common	Individual	Side
4 *			Bottom
5*	Individual	Common	Side
6 *			Bottom
7 *	Individual	Individual	Side
8 *			Bottom

* Option
P port or EA/EB port of symbol "3" to "8" can be individual port with block disk. Therefore, if using individual SUP spacer or individual EXH spacer for individual port, its symbol is "1".
When an individual passage is used, P, EA and EB ports will be bottom ported.

Port size

Symbol	P, EA, EB *	A, B *
01	1/4	1/8
02		1/4
C6		One-touch fitting for ø6
C8		One-touch fitting for ø8
M		Mixed

* For bottom ported, 1/8 is only available.

Thread type

Nil	Rc
F	G
N	NPT
T	NPTF

Control unit type

Control equipment \ Symbol	Nil	MP	AP	M	A	G	F	C	E
Air release valve		●	●	●	●			●	●
Air filter regulator with manual drain		●		●		●			
Air filter regulator with auto-drain			●		●		●		
Pressure switch		●	●						
Blanking plate (Air release valve)						●	●		
Blanking plate (Filter regulator)								●	
Blanking plate (Pressure switch)				●	●	●	●	●	
Required stations		2 stations							1 station

Note) Control unit is D side mounting only.

Air release valve coil rating

Nil	None
1	100 VAC, 50/60 Hz
5	24 VDC
9	Other

CE-compliant

Nil	—
Q	CE-compliant

How to Order Manifold Assembly

<Example> Plug-in type with terminal block

VV5FR2-01T1-091-02-MP5 ····· **1 set (Manifold base part no.)**
***VFR2100-5FZ** ····· **5 sets (2 position single part no.)**
***VFR2200-5FZ** ····· **2 sets (2 position double part no.)**

→ The asterisk denotes the symbol for assembly. Prefix it to the part nos. of the solenoid valve, etc.

The 1st and 2nd station are used for control unit mounting.
When ordering, specify the part nos. in order from the 3rd. station in the D side.
When entry of part numbers becomes complicated, indicate on the manifold specification sheet.

<Example> Non plug-in type

VV5FR2-10-071-01-M5 ····· **1 set (Manifold base part no.)**
***VFR2110-5D** ····· **5 sets (2 position single part no.)**

→ The asterisk denotes the symbol for assembly. Prefix it to the part nos. of the solenoid valve, etc.

The 1st and 2nd station are used for control unit mounting.
When ordering, specify the part nos. in order from the 3rd. station in the D side.
When entry of part numbers becomes complicated, indicate on the manifold specification sheet.

Manifold with Control Unit: Plug-in Type/Non Plug-in Type

Plug-in type:

VV5FR2-01T-[Station]1-[Port size]-[Control unit][Voltage of air release valve]

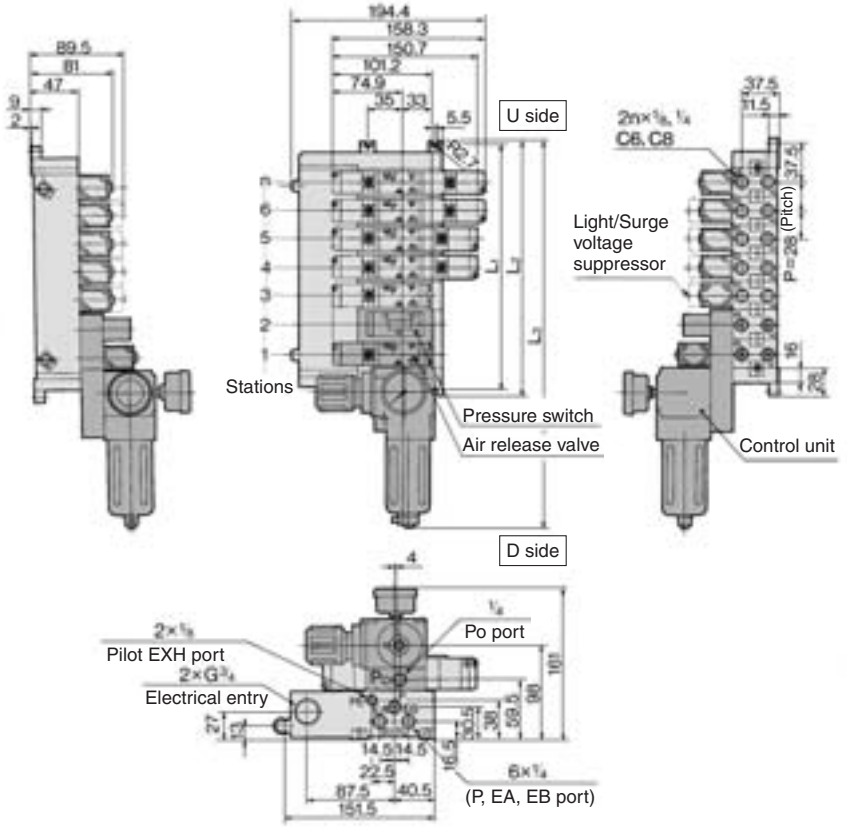

Example for manifold

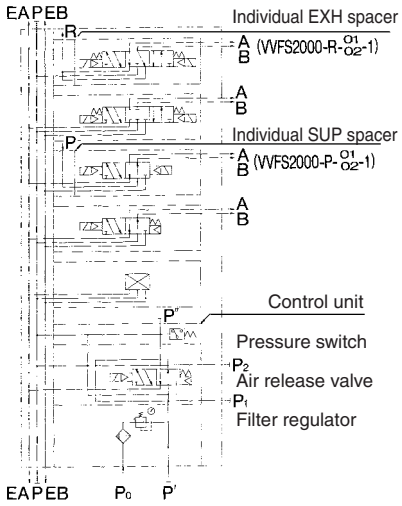

Non plug-in type:

VV5FR2-10-[Station]1-[Port size]-[Control unit][Voltage of air release valve]

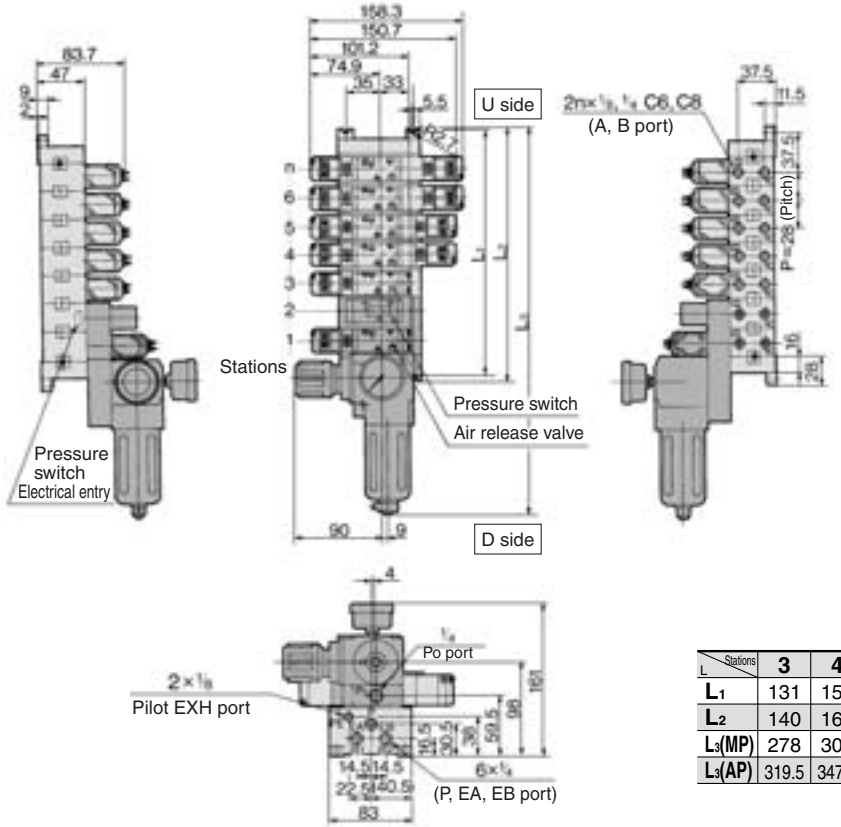

Example for manifold

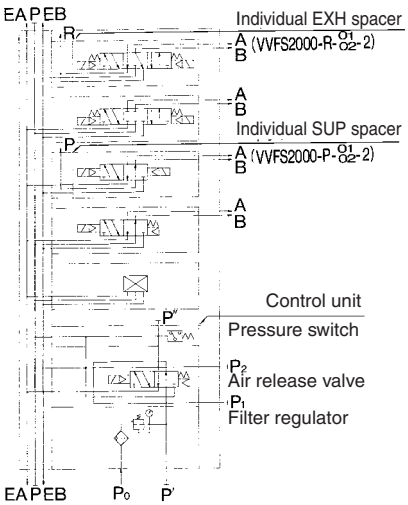

n: Stations

L \ Stations	3	4	5	6	7	8	9	10	Formula
L_1	131	159	187	215	243	271	299	327	$L_1 = 28 \times n + 47$
L_2	140	168	196	224	252	280	308	336	$L_2 = 28 \times n + 56$
L_3(MP)	278	306	334	362	390	418	446	474	$L_3 = 28 \times n + 194$
L_3(AP)	319.5	347.5	375.5	403.5	431.5	459.5	487.5	515.5	$L_3 = 28 \times n + 235.5$

Manifold Base Construction — Plug-in Type, Non Plug-in Type

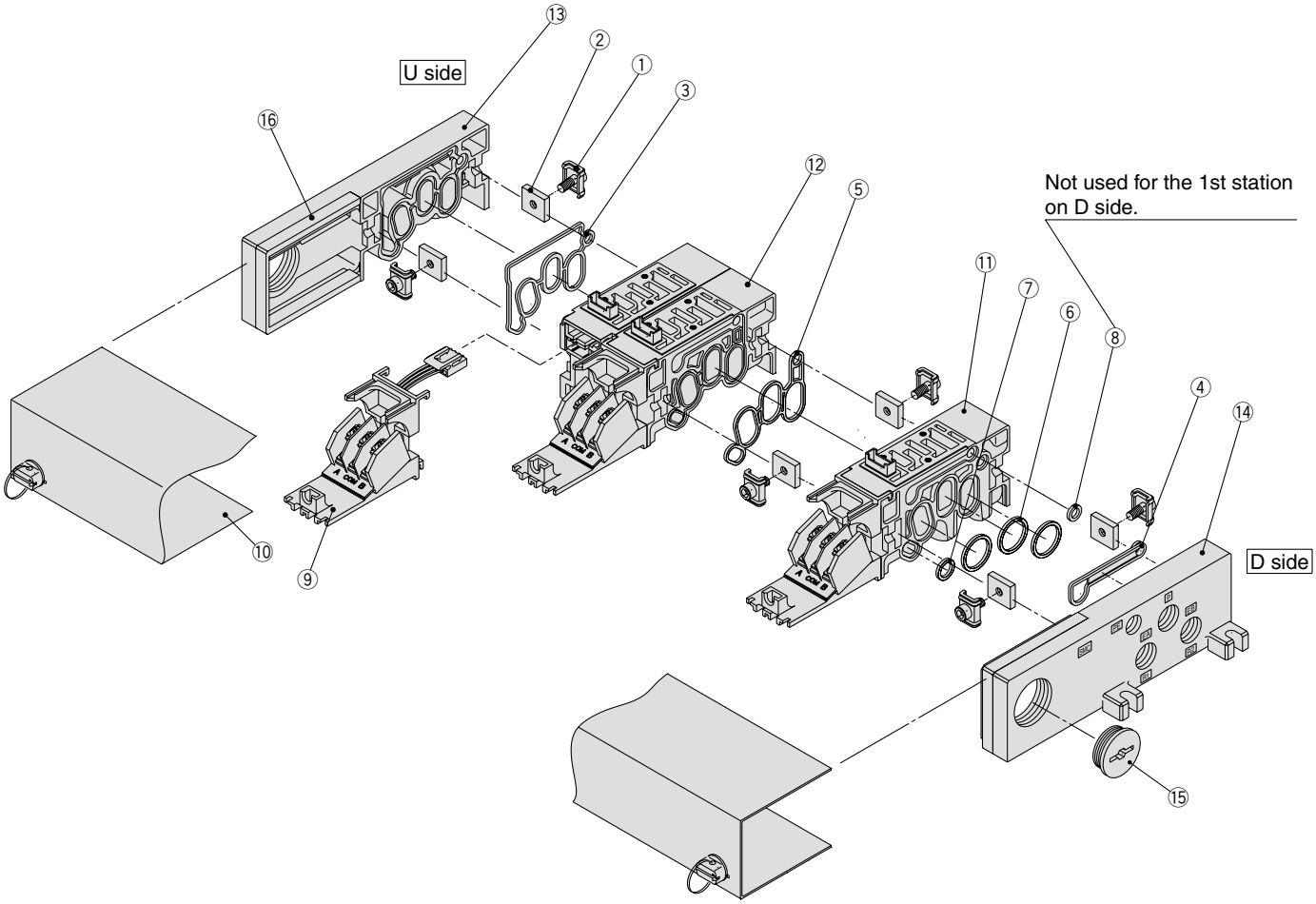

∗ Manifold Base/Construction: Plug-in type with terminal block (01T1).

- For increasing the manifold bases, please order the manifold block assembly number of the principle number assembly ⑪ and ⑫.
  For plug-in type: The manifold base with terminal stand (integrated with a junction cover) is required with the ⑩ junction cover assembly.
- Manifold base is consisted of the junction of 2 and 3 station bases.

Example) U side (n)----(6)----(5)----(4)----(3)----(2)----(1) D side

<5 stations (Odd number)>

2 stations	2 stations	1 station

<6 stations (Even number>

2 stations	2 stations	1 station	1 station

Replacement Parts

No.	Description	Material	Part no.	
1	**Connection fitting assembly**	Steel plate		AXT625-4-1A
2	**Connection fitting B**	Steel plate		AXT625-5
3	**Gasket A**	NBR		AXT625-17
4	**Gasket B**	NBR		AXT625-16
5	**Gasket**	HNBR		VVFS2000-32-1H
6	**O-ring**	NBR		18 x 15 x 1.5
7	**O-ring**	NBR		10.5 x 7.5 x 1.5
8	**O-ring**	NBR		8 x 5 x 1.5
9	**Adapter plate**	Resin	For 01	AXT625-6
	Adapter plate assembly	—	For 01T	AXT625-28-13A
			For 01T1	(Terminal section with adapter plate and lead wire assembly)
	Adapter plate	Resin	For 01C	AXT625-28-1
			For 01F	VVF2000-26-6
			For 01S□	AXT625-6
10	**Junction cover assembly**	—	For 01	AXT625-7A
			For 01T	AXT625-28-3A
			For 01T1	AXT625-28-7A-Stations
			For 01C	
			For 01F	VVF2000-26-5A-Stations
			For 01S□	AZ738-10A-Stations
15	**Rubber plug**	NBR	For 01	AXT333-12
			For 01T (1) / 01S□	AXT625-22
	Plug	—	For 01W	EXP22S
16	**Guard**	Resin	For 01 / 01T (1)	AXT625-28-4

Replacement Parts: Sub Assembly

No.	Description	Part no.	Component parts	Applicable manifold base
11	**Manifold block assembly (for 1 station)**	AXT625-01A-$\frac{1}{2}$(-B) Note)	Manifold block ⑪, Metal joint ①, ②, O-ring ⑥, ⑦, ⑧, Junction cover ⑩, Adapter plate ⑨, Pin housing, Guide, Insert plug lead wire	Plug-in type With attachment plug lead wire
		AXT625-20A-$\frac{1}{2}$(-B) Note)	Manifold block ⑪, Metal joint ①, ②, O-ring ⑥, ⑦, ⑧, Junction cover ⑩, Adapter plate assembly (with terminal) ⑨, Pin housing, Guide	Plug-in type With terminal block
		AXT625-10A-$\frac{1}{2}$(-B) Note)	Manifold block ⑪, Metal joint ①, ②, O-ring ⑥, ⑦, ⑧	Non plug-in type
12	**Manifold block assembly (for 2 stations)**	AXT625-01A2-$\frac{1}{2}$ Note)	Manifold block ⑫, Metal joint ①, ②, Gasket ⑤, Junction cover ⑩, Adapter plate ⑨, Pin housing, Guide, Insert plug lead wire	Plug-in type With attachment plug lead wire
		AXT625-20A2-$\frac{1}{2}$ Note)	Manifold block ⑫, Metal joint ①, ②, Gasket ⑤, Junction cover ⑩, Adapter plate assembly (with terminal) ⑨, Pin housing, Guide	Plug-in type With terminal block
		AXT625-10A2-$\frac{1}{2}$ Note)	Manifold block ⑪, Metal joint ①, ②, Gasket ⑤	Non plug-in type
13	**End plate (U side) assembly**	AXT625-2A	End plate (U) ⑬, Metal joint ①, ②, Gasket A ③, Guard ⑯	Plug-in type With attachment plug lead wire
		AXT625-2A-20	End plate (U) ⑬, Metal joint ①, ②, Gasket A ③, Guard ⑯	Plug-in type With terminal block
		AXT625-2A-10	End plate (U) ⑬, Metal joint ①, ②, Gasket A ③	Non plug-in type
14	**End plate (D side) assembly**	AXT625-3A	End plate (D) ⑭, Metal joint ①, ②, Gasket B ④, Guard ⑯, Steel ball	Plug-in type With attachment plug lead wire
		AXT625-3A-20	End plate (D) ⑭, Metal joint ①, ②, Gasket B ④, Guard ⑯, Steel ball	Plug-in type With terminal block
		AXT625-3A-10	End plate (D) ⑭, Metal joint ①, ②, Gasket B ④, Steel ball	Non plug-in type

Note) 1: A, B port size Rc 1/8, 2: A, B port size Rc 1/4, (-B): A, B port bottom ported

5 Port Pilot Operated Solenoid Valve
Rubber Seal, Plug-in/Non Plug-in
Series VFR3000

[Option] NRTL /C

Plug-in type

Non plug-in type

JIS Symbol

2 position	3 position
Single	Closed center
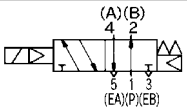	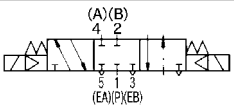
Double	Exhaust center
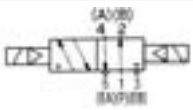	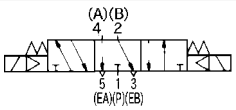
	Pressure center
	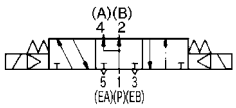

Standard Specifications

Valve specifications	Fluid		Air
	Operating pressure range	2 position single/3 position	0.2 to 0.9 MPa
		2 position double	0.1 to 0.9 MPa
	Ambient and fluid temperature		–10 to 50°C (No freezing. Refer to page 5.)
	Lubrication		Not required (1)
	Manual override		Non-locking push type
	Mounting orientation		Unrestricted
	Shock/Vibration resistance		300/50 m/s² (2)
	Enclosure		Dustproof
Electricity specifications	Coil rated voltage		100, 200 VAC (50/60 Hz), 24 VDC
	Allowable voltage fluctuation		–15 to –10% of rated voltage
	Apparent power (AC) (3)	Inrush	5.6 VA/50 Hz, 5.0 VA/60 Hz
		Holding	3.4 VA (2.1 W)/50 Hz, 2.3 VA (1.5 W)/60 Hz
	Power consumption (DC) (3)		1.8 W
	Electrical entry	Plug-in type	Conduit terminal
		Non plug-in type	Grommet, Grommet terminal Conduit terminal, DIN terminal

Note 1) Use turbine oil Class 1 (ISO VG32), if lubricated.
Note 2) Impact resistance: No malfunction occurred when it is tested with a drop tester in the axial direction and at the right angles to the main valve and armature in both energized and de-energized states every once for each condition. (Values at the initial period)
Vibration resistance: No malfunction occurred in a one-sweep test between 45 and 2000 Hz. Test was performed at both energized and de-energized states in the axial direction and at the right angles to the main valve and armature. (Values at the initial period)
Note 3) At rated voltage

Option Specifications

Pilot type		External pilot Note)
Manual override	Main valve	Direct manual override
	Pilot valve	Non-locking push type A (Extended), Locking type B (Tool required), Locking type C (Lever)
Coil rated voltage		110 to 120, 220, 240 VAC 50/60 Hz
		12 VDC
Porting specifications		Bottom ported
Option		With light/surge voltage suppressor

Note) Operating pressure: 0 to 0.9 MPa
Pilot pressure: 2 position single/3 position 0.2 to 0.9 MPa
2 position double 0.1 to 0.9 MPa

Model

Type of actuation		Model: Plug-in	Model: Non plug-in	Port size Rc	Flow characteristics (1): 1 → 4/2 (P → A/B) C [dm³/(s·bar)]	b	Cv	4/2 → 5/3 (A/B → EA/EB) C [dm³/(s·bar)]	b	Cv	Max. (2) operating cycle (Hz)	Response time (3) (ms)	Mass (4) (kg)
2 position	Single	VFR310□	VFR311□	1/4	7.5	0.38	1.9	7.5	0.34	1.9	5	30 or less	0.61 (0.64) <0.58>
			VFR314□	3/8	8.4	0.39	2.2	8.7	0.38	2.2			
	Double	VFR320□	VFR321□	1/4	7.1	0.41	1.9	7.4	0.40	1.9	5	30 or less	0.71 (0.74) <0.69>
			VFR324□	3/8	7.9	0.36	2.0	8.6	0.37	2.2			
3 position	Closed center	VFR330□	VFR331□	1/4	6.8	0.40	1.8	6.3	0.38	1.6	3	50 or less	0.72 (0.75) <0.71>
			VFR334□	3/8	7.2	0.39	1.9	6.5	0.40	1.7			
	Exhaust center	VFR340□	VFR341□	1/4	6.5	0.42	1.7	7.9 [3.4]	0.41 [0.47]	2.0 [0.96]	3	50 or less	0.72 (0.75) <0.71>
			VFR344□	3/8	6.9	0.42	1.8	9.5 [3.4]	0.39 [0.46]	2.4 [0.96]			
	Pressure center	VFR350□	VFR351□	1/4	7.6 [2.4]	0.33 [0.48]	1.9 [0.69]	6.1	0.36	1.5	3	50 or less	0.72 (0.75) <0.71>
			VFR354□	3/8	9.3 [2.4]	0.34 [0.47]	2.2 [0.69]	6.5	0.41	1.7			

Note 1) [ ]: Denotes the normal position.
Note 2) Min. operating frequency is once in 30 days.
Note 3) Based on dynamic performance test, JIS B 8375-1981. (0.5 MPa, Coil temperature: 20°C, at rated voltage, without surge voltage suppressor)
Note 4) For VFR3□00-□FZ-$^{02}_{03}$, ( ): VFR3□10-DZ□-$^{02}_{03}$, < >: VFR3□40-□G-$^{02}_{03}$

How to Order

Electrical entry

F: Plug-in type, conduit terminal

Option

Nil	None
Z	With light/surge voltage suppressor

CE-compliant

Nil	—
Q	CE-compliant *

* Electrical entry: D/DO, Y/YO and F only

Porting specifications (P, A, EA, EB port)

Nil	Side ported
B	Bottom ported *

* Option

Port size (P, A, B, EA, EB port)

Nil	Without sub-plate
02	1/4
03	3/8

* For bottom ported: Rc 1/4

Thread type

Nil	Rc
F	G
N	NPT
T	NPTF

Plug-in VFR3 1 0 0 □ – 5 F □ □ – □ 02 □ – □

Non plug-in VFR3 1 1 1 □ – 1 D □ □ – □ 02 □ – □ **Common electrical entry**

Non plug-in VFR3 1 4 0 □ – 1 G □ □ – □ 02 □ – □ **Individual electrical entry**

Symbol

1	2 position single
2	2 position double
3	3 position closed center 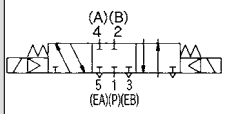
4	3 position exhaust center
5	3 position pressure center

Body option

0	Standard
1 *	Direct manual override

* Option

Pilot type

Nil	Internal pilot
R *	External pilot

* Option

Coil rated voltage

1	100 VAC, 50/60 Hz
2	200 VAC, 50/60 Hz
3 *	110 to 120 VAC 50/60 Hz
4 *	220 VAC, 50/60 Hz
5	24 VDC
6 *	12 VDC
7 *	240 VAC, 50/60 Hz
9 *	Other

* Option

Option/VFR3□1□

Nil	None
Z	With light/surge voltage suppressor

Option/VFR3□4□

Nil	None
Z *	With light/surge voltage suppressor
S *	With surge voltage suppressor

* Indicator light is not available for grommet type. With surge voltage suppressor is available for grommet type only.

Electrical entry: VFR3□1□

E: Grommet terminal

D: DIN terminal

Electrical entry: VFR3□4□

G: Grommet

E: Grommet terminal

T: Conduit terminal

D, Y: DIN terminal

Pilot valve manual override

Nil: Non-locking push type

A *: Non-locking push type A (Extended)

B *: Locking type B (Tool required)

C *: Locking type C (Lever)

* Option

How to Order Pilot Valve Assembly

SF4 – 1 F □ – 70 – □ – □

Coil rated voltage

Symbol	Rated voltage
1	100 VAC, 50/60 Hz
2	200 VAC, 50/60 Hz
3 *	110 to 120 VAC, 50/60 Hz
4 *	220 VAC, 50/60 Hz
5	24 VDC
6 *	12 VDC
7 *	240 VAC, 50/60 Hz
9 *	Other

* Option

Electrical entry, Light/Surge voltage suppressor

Symbol	Electrical entry	Indicator light	With surge voltage suppressor	Applicable valve model
F *	Plug-in	—	—	VFR3□0□ VFR3□1□
G	Grommet	—	—	VFR3□4□
GS		—	●	
E	Grommet terminal	—	—	
EZ		●	●	
T	Conduit terminal	—	—	
TZ		●	●	
D	DIN terminal	—	—	
DZ		●	●	
Y	DIN terminal (DIN43650B type)	—	—	
YZ		●	●	

Manual override

Nil	Non-locking push type
A *	Non-locking push type A (Extended)
B *	Locking type B (Tool required)
C *	Locking type C (Lever)

* Option

Symbol

Symbol	Applicable valve model
Nil	VFR3□0□ VFR3□1□
1	VFR3□4□

CE-compliant

Nil	—
Q	CE-compliant *

* Electrical entry: D, Y and F only

* "VFR3□0□", "VFR3□1□": Pilot valve assembly is all plug-in (F).

Cylinder Speed Chart

Use as a guide for selection.
Please confirm the actual conditions with SMC Sizing Program.

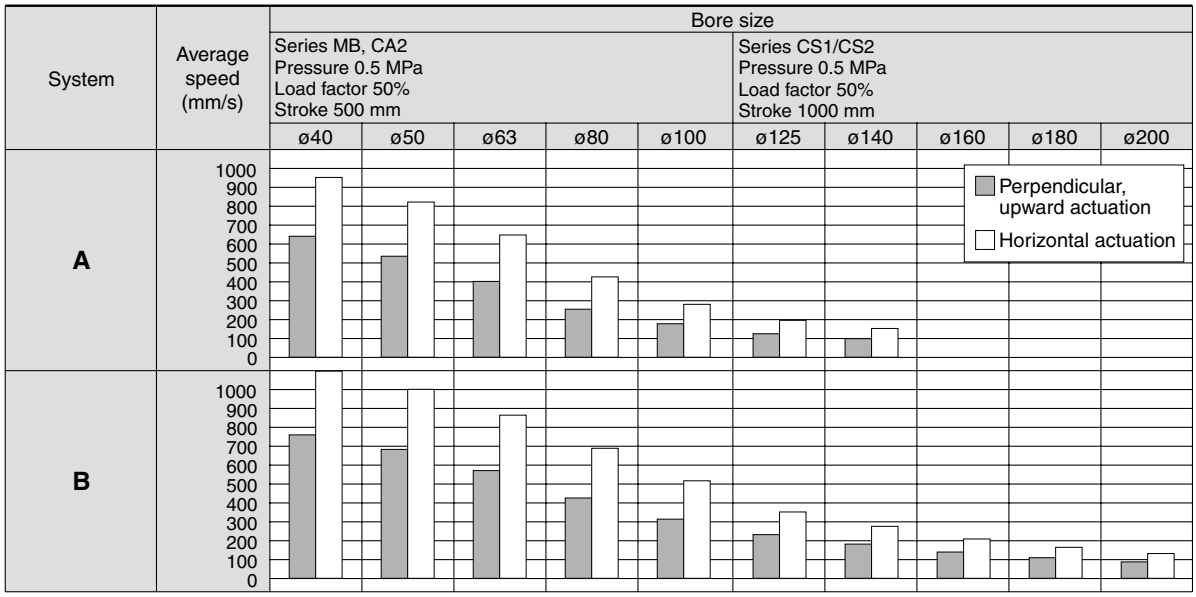

∗ It is when the cylinder is extending that is meter-out controlled by speed controller which is directly connected with cylinder, and its needle valve with being fully open.
∗ The average velocity of the cylinder is what the stroke is divided by the total stroke time.
∗ Load factor: ((Load weight x 9.8)/Theoretical force) x 100%

System Components

System	Solenoid valve	Speed controller	Silencer	SPG (Steel pipe) dia. x Length
A	Series VFR3000 Rc 1/4	AS4000-02 (S = 24 mm²)	AN200-02 (S = 35 mm²)	6A x 1 m
B	Series VFR3000 Rc 3/8	AS420-03 (S = 73 mm²)	AN300-03 (S = 60 mm²)	10A x 1 m

How to Order Sub-plate Assembly

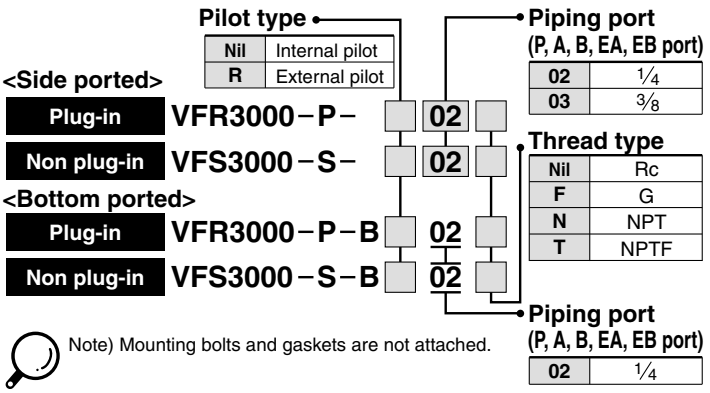

Note) Mounting bolts and gaskets are not attached.

Construction

2 position single

VFR31□0

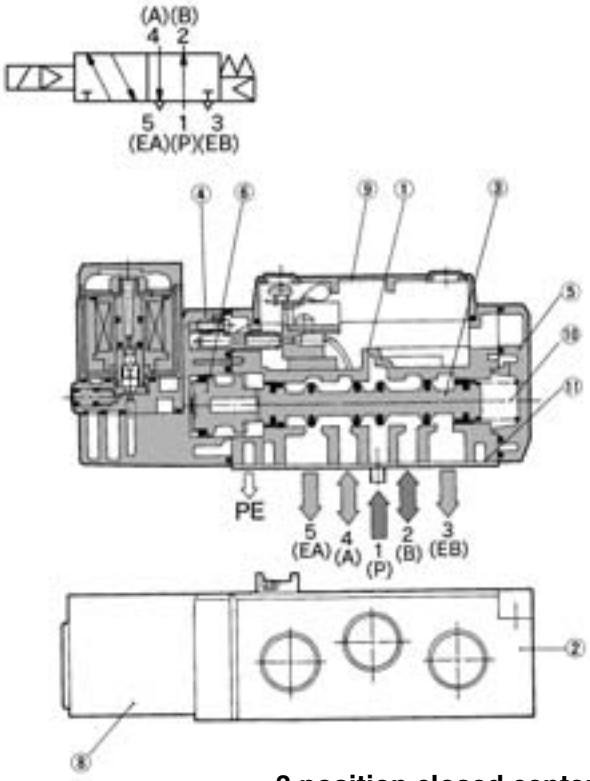

2 position double

VFR32□0

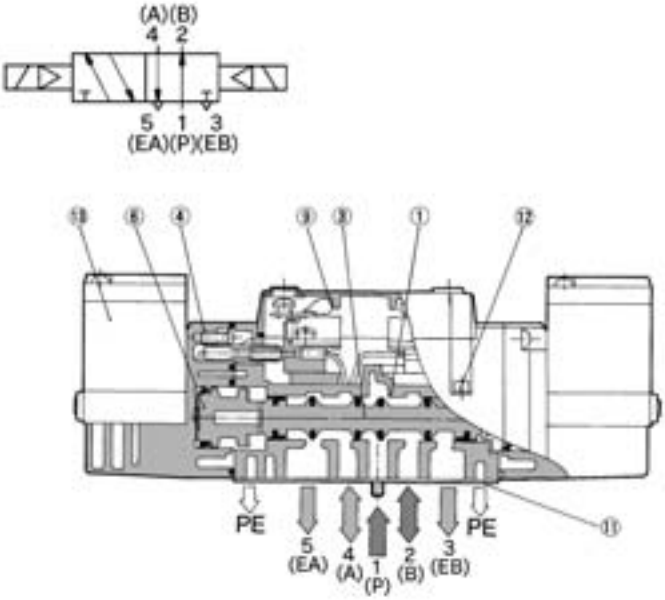

3 position closed center/exhaust center/pressure center

Closed center: VFR33□0

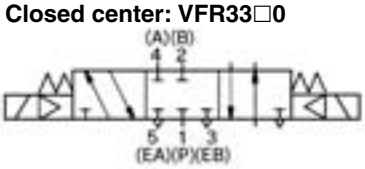

Exhaust center: VFR34□0

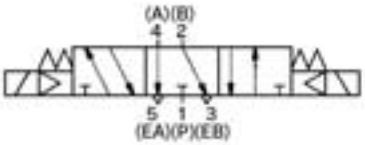

Pressure center: VFR35□0

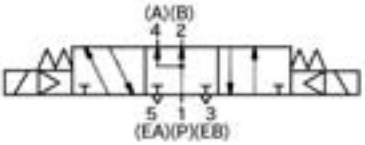

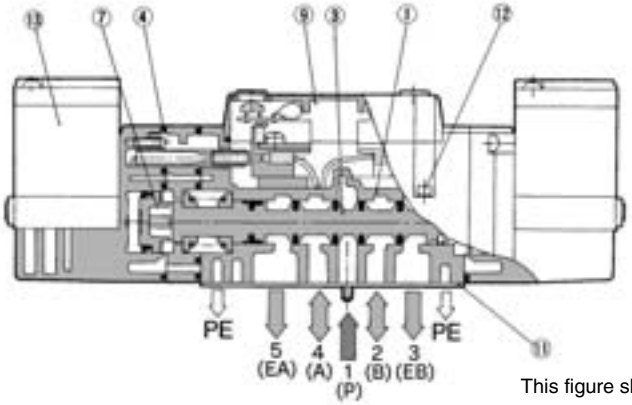

This figure shows a closed center type.

Component Parts

No.	Description	Material	Note
1	**Body**	Aluminum die-casted	Platinum silver
2	**Sub-plate**	Aluminum die-casted	Platinum silver
3	**Spool valve**	Aluminum, NBR	
4	**Adapter plate**	Resin	Black
5	**End plate**	Resin	Black

Component Parts

No.	Description	Material	Note
6	**Piston**	Resin	
7	**Piston**	Resin	
8	**Junction cover**	Resin	
9	**Light cover**	Resin	
10	**Return spring**	Stainless steel	

Replacement Parts

No.	Description	Material	Description		
			VFR31□□	**VFR32□□**	**VFR33□□/34□□/35□□**
11	**Gasket**	NBR	VFR3000-26-4	VFR3000-26-4	VFR3000-26-4
12	**Hexagon socket head screw**	Steel	AXT632-3 (M3 x 32)	AXT632-3 (M3 x 32)	AXT632-3 (M3 x 32)
13	**Pilot valve assembly**	—	Refer to “How to Order Pilot Valve Assembly” on page 1252.		
—	**Sub-plate assembly**	—	Refer to “How to Order Sub-plate Assembly” on page 1253.		

Plug-in: 2 Position Single/Double, 3 Position Closed Center/Exhaust Center/Pressure Center

2 position single: VFR310$^{0}_{1}$-□FZ

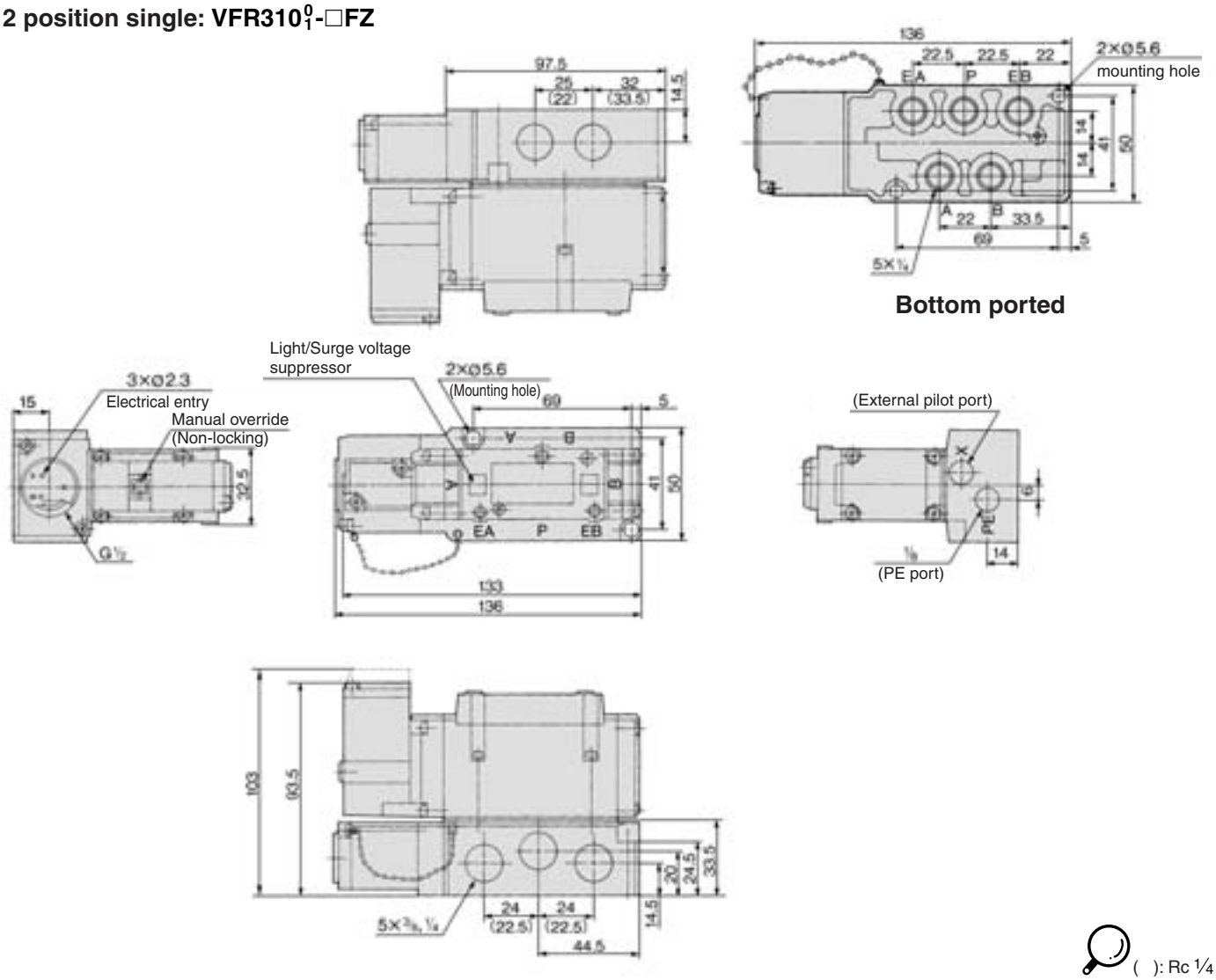

( ): Rc ¼

2 position single: VFR320$^{0}_{1}$-□FZ

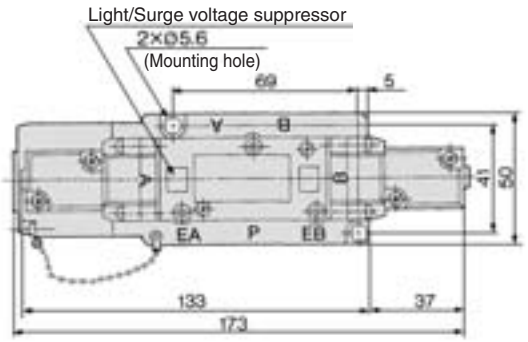

∗ Other dimensions are the same as the single type.

3 position closed center: VFR330$^{0}_{1}$-□FZ
3 position exhaust center: VFR340$^{0}_{1}$-□FZ
3 position pressure center: VFR350$^{0}_{1}$-□FZ

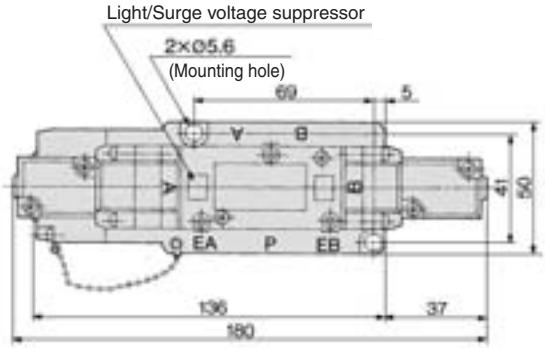

∗ Other dimensions are the same as the single type.

Non Plug-in: 2 Position Single/Double, 3 Position Closed Center/Exhaust Center/Pressure Center

2 position single: VFR311$^{0}_{1}$-□E, VFR311$^{0}_{1}$-□DZ

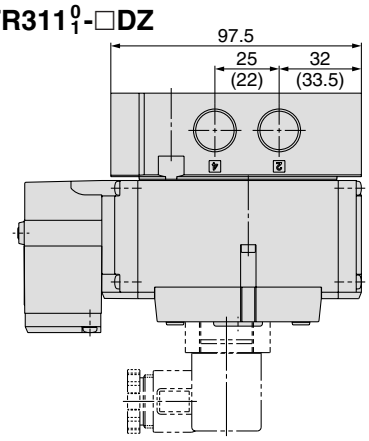

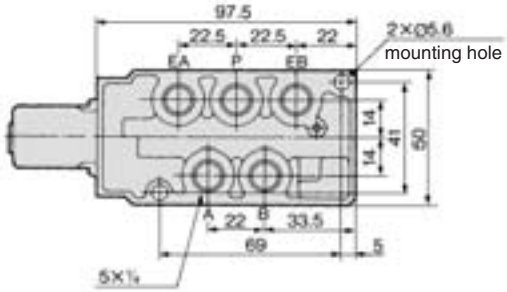

Bottom ported

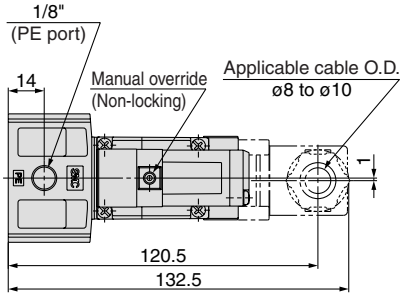

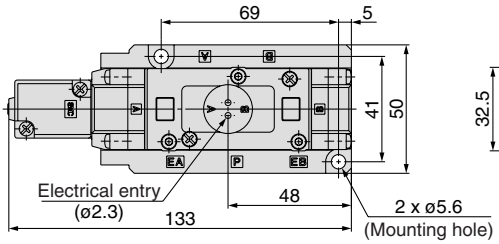

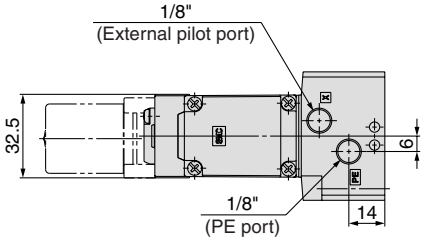

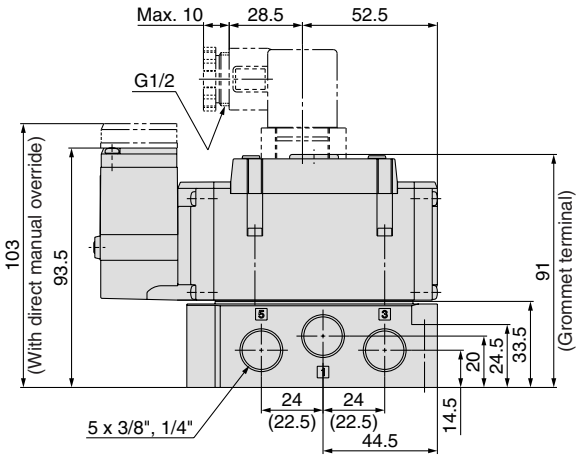

( ): Rc ¼

2 position double: VFR321$^{0}_{1}$-□E, VFR321$^{0}_{1}$-□DZ

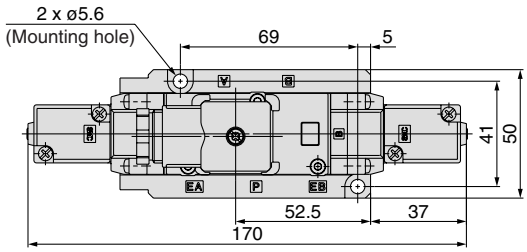

∗ Other dimensions are the same as the single type.

3 position closed center: VFR331$^{0}_{1}$-□E, VFR341$^{0}_{1}$-□DZ
3 position exhaust center: VFR341$^{0}_{1}$-□E, VFR341$^{0}_{1}$-□DZ
3 position pressure center: VFR351$^{0}_{1}$-□E, VFR351$^{0}_{1}$-□DZ

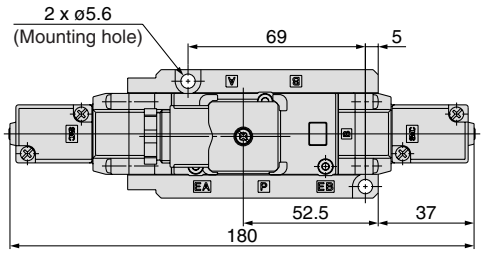

∗ Other dimensions are the same as the single type.

Non Plug-in: 2 Position Single

2 position single: VFR314$^{0}_{1}$-□G

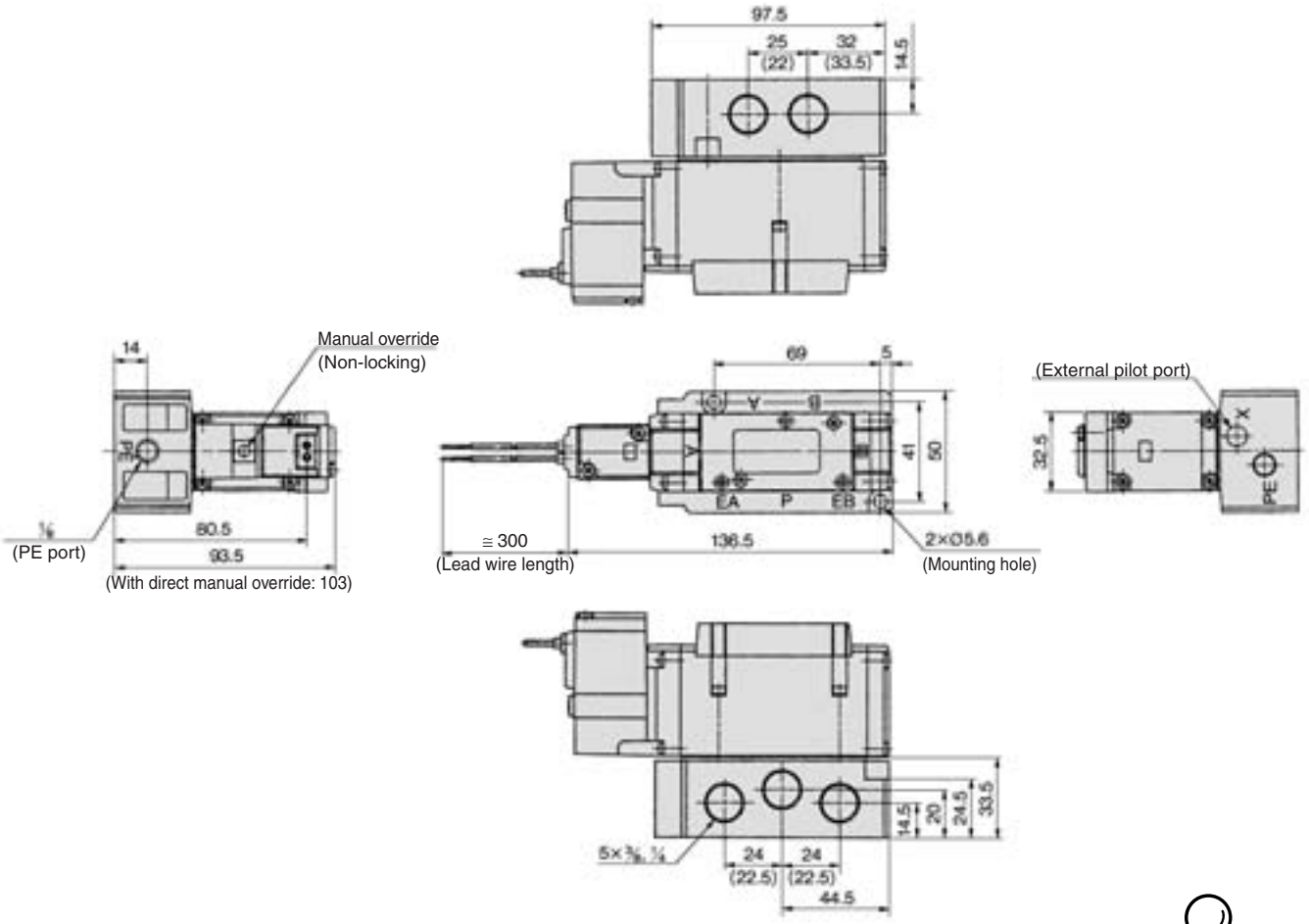

( ): Rc 1/4

E: Grommet terminal

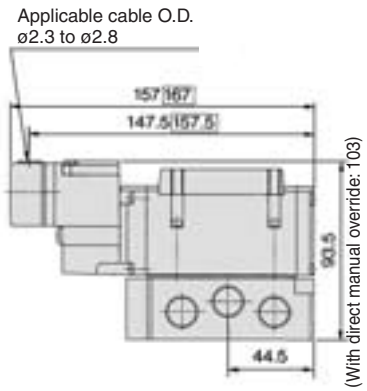

□: With light/surge voltage suppressor

T: Conduit terminal

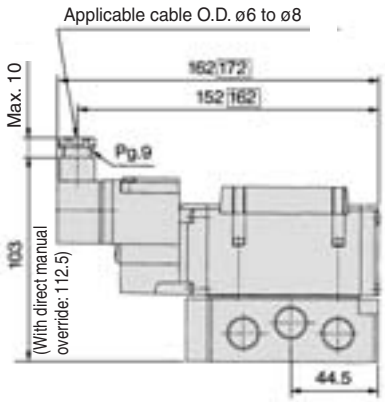

□: With light/surge voltage suppressor

D, Y: DIN terminal

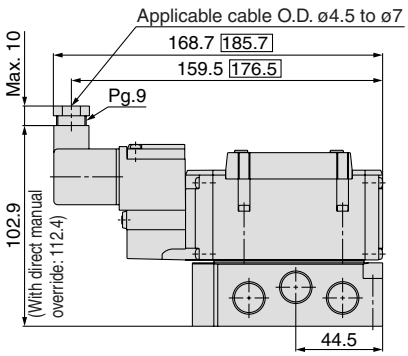

□: With light/surge voltage suppressor

Non Plug-in: 2 Position Double, 3 Position Closed Center/Exhaust Center/Pressure Center

2 position double: VFR324$^{0}_{1}$-□G

3 position closed center: VFR334$^{0}_{1}$-□G
3 position exhaust center: VFR344$^{0}_{1}$-□G
3 position pressure center: VFR354$^{0}_{1}$-□G

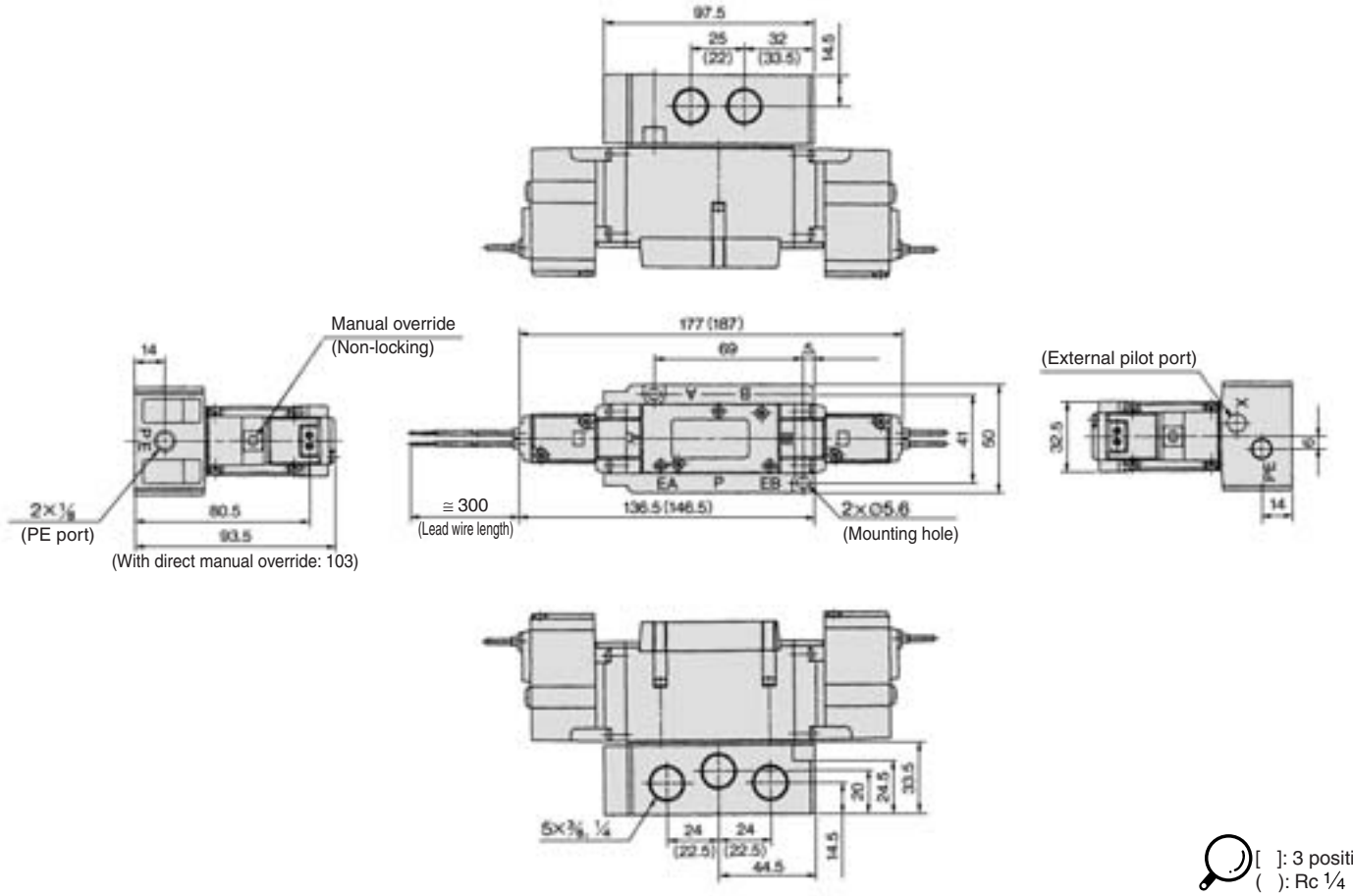

[ ]: 3 position
( ): Rc 1/4

E: Grommet terminal

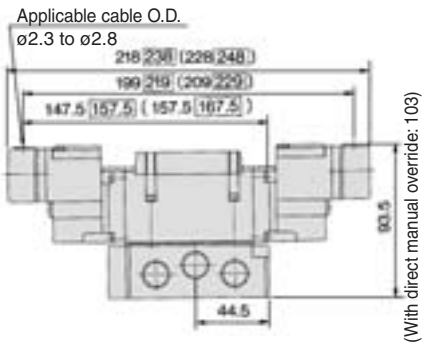

[ ]: 3 position
▭: With light/surge voltage suppressor

T: Conduit terminal

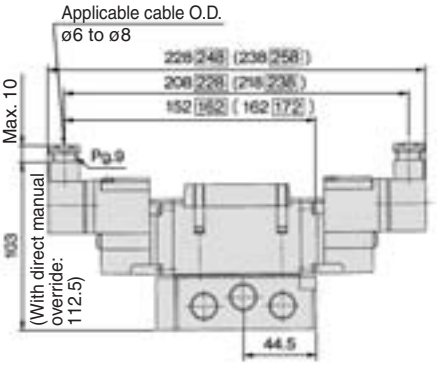

[ ]: 3 position
▭: With light/surge voltage suppressor

D, Y: DIN terminal

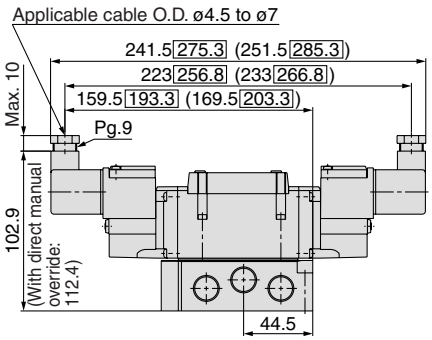

[ ]: 3 position
▭: With light/surge voltage suppressor

Manifold Specifications

Manifold Specifications

Base mounted	Wiring	Porting specifications	Port size		Stations	Applicable valve model
		A, B port	P, EA, EB	A, B		
Plug-in type **VV5FR3-01□(-Q)**	• With terminal block	Side/Bottom	Note) ½	¼, ⅜ C8, C10	2 to 10	VFR3□00-□F(-Q)
	• With multi-connector • With D-sub connector				2 to 8	
Non plug-in type **VV5FR3-10(-Q)**	• Grommet terminal • DIN terminal				2 to 10	VFR3□1□-□E VFR3□1□-□D(-Q)
Non plug-in type **VV5FR3-40(-Q)**	• Grommet • Grommet terminal • Conduit terminal • DIN terminal					VFR3□4□-□G VFR3□4□-□E VFR3□4□-□T VFR3□4□-□D(-Q)

Note) If silencer is mounted to EA/EB port, use silencer "AN403-04" (O.D. ø27).

How to Order Manifold Assembly

<Example> Plug-in type with terminal block: 6 stations

VV5FR3-01T-061-02 ..... **1 set (Manifold base part no.)**
∗VFR3100-5FZ ..... **3 sets (2 position single part no.)**
∗VFR3200-5FZ ..... **2 sets (2 position double part no.)**
∗VVFS3000-10A ..... **1 set (Blanking plate)**
→ The asterisk denotes the symbol for assembly. Prefix it to the part nos. of the solenoid valve, etc.

Valve arrangement is counted from the D side.
When ordering, specify the part nos. in order from the 1st. station in the D side.
When entry of part numbers becomes complicated, indicate on the manifold specification sheet.

<Example> Non plug-in type: 6 stations

VV5FR3-10-061-03 ..... **1 set1 set (Manifold base part no.)**
∗VFR3110-5D ..... **5 sets (2 position single part no.)**
∗VFR3410-5D ..... **1 set (3 position exhaust center part no.)**
∗VVFS3000-R-03-2 ..... **1 set (Individual EXH spacer part no.)**
→ The asterisk denotes the symbol for assembly. Prefix it to the part nos. of the solenoid valve, etc.

Valve arrangement is counted from the D side.
When ordering, specify the part nos. in order from the 1st. station in the D side.
When entry of part numbers becomes complicated, indicate on the manifold specification sheet.

Plug-in Type: With Terminal Block

- **Since lead wires of solenoid valve are connected with the terminals on upper surface of terminal block, corresponding lead wires from power source can be wired at the bottom of terminal block.**

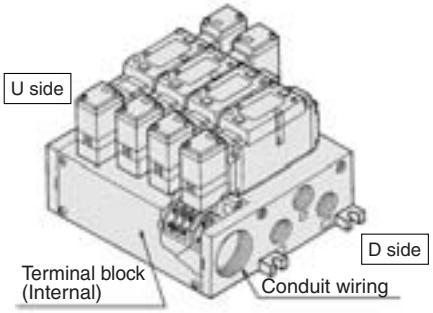

VV5FR3 – 01T – 06 1 – 02 □ – □

- **Series VFR3000 Manifold**
- **Plug-in type with terminal block**
- **Stations**

02	2 stations
⋮	⋮
10	10 stations

- **Symbol**

Symbol	Passage P	Passage EA, EB	Porting specifications (A, B)
1	Common	Common	Side
2			Bottom ∗

∗ Option

- **Port size**

Symbol	P, EA, EB	A, B ∗
02	½	¼
03		⅜
C8		One-touch fitting for ø8
C10		One-touch fitting for ø10
M		Mixed

∗ For bottom ported: Rc 1/4, 3/8 only.

- **Thread type**

Nil	Rc
F	G
N	NPT
T	NPTF

- **CE-compliant**

Nil	—
Q	CE-compliant

Plug-in Type: With Multi-connector (For wiring specifications, refer to page 1326.)

- **Master connection of power and solenoid valves.**
- **Quick wiring permits ease of installation.**

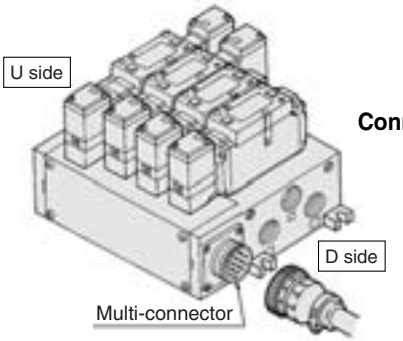

VV5FR3 – 01C D – 05 1 – 02 □ – □

- **Series VFR3000 Manifold**
- **Plug-in type with multi-connector**
- **Connector mounting direction**

D	D side mounting
U	U side mounting

- **Stations**

02	2 stations
⋮	⋮
08 ∗	8 stations

∗ Max: 8 stations

- **Symbol**

Symbol	Passage P	Passage EA, EB	Porting specifications (A, B)
1	Common	Common	Side
2			Bottom ∗

∗ Option

- **Port size**

Symbol	P, EA, EB	A, B ∗
02	½	¼
03		⅜
C8		One-touch fitting for ø8
C10		One-touch fitting for ø10
M		Mixed

∗ For bottom ported: Rc 1/4, 3/8 only.

- **Thread type**

Nil	Rc
F	G
N	NPT
T	NPTF

- **CE-compliant**

Nil	—
Q	CE-compliant

Plug-in Type: With D-sub Connector (For wiring specifications, refer to page 1326.)

- Wide range of interchangeability (25 pin D-sub connector conforms to MIL standard)
- Quick wiring permits easier installation.

VV5FR3 – 01F D – 06 1 – 02 ☐ – ☐

- Series VFR3000 Manifold
- Plug-in type with D-sub connector
- Connector mounting direction

D	D side mounting
U	U side mounting

- Stations

02	2 stations
⋮	⋮
08 *	8 stations

* Max: 8 stations

- Symbol

Symbol	Passage P	Passage EA, EB	Porting specifications (A, B)
1	Common	Common	Side
2			Bottom *

* Option

- Port size

Symbol	P, EA, EB	A, B *
02	½	¼
03		⅜
C8		One-touch fitting for ø8
C10		One-touch fitting for ø10
M		Mixed

* For bottom ported: Rc 1/4, 3/8 only.

- Thread type

Nil	Rc
F	G
N	NPT
T	NPTF

- CE-compliant

Nil	—
Q	CE-compliant

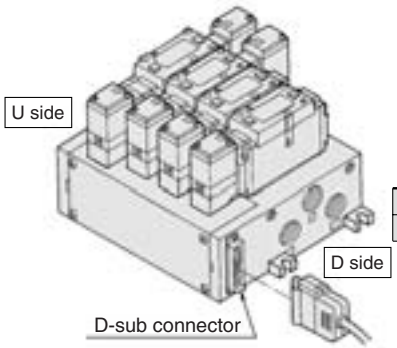

Non Plug-in Type: Grommet Terminal, DIN Terminal (Common electrical entry)

- Individual wiring for every valve

VV5FR3 – 10 – 05 1 – 02 ☐ – ☐

- Series VFR3000 Manifold
- Non plug-in type Common electrical

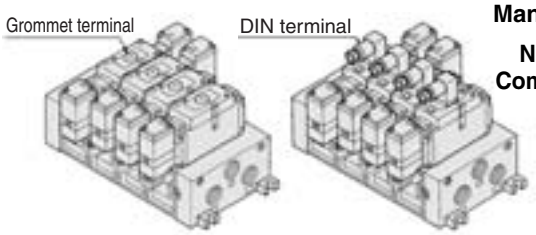

- Stations

02	2 stations
⋮	⋮
10	10 stations

- Symbol

Symbol	Passage P	Passage EA, EB	Porting specifications (A, B)
1	Common	Common	Side
2			Bottom *

* Option

- Port size

Symbol	P, EA, EB	A, B *
02	½	¼
03		⅜
C8		One-touch fitting for ø8
C10		One-touch fitting for ø10
M		Mixed

* For bottom ported: Rc 1/4, 3/8 only.

- Thread type

Nil	Rc
F	G
N	NPT
T	NPTF

- CE-compliant

Nil	—
Q	CE-compliant

Non Plug-in Type: Grommet, Grommet Terminal, Conduit Terminal, DIN Terminal (Individual electrical entry)

- Individual wiring for every valve

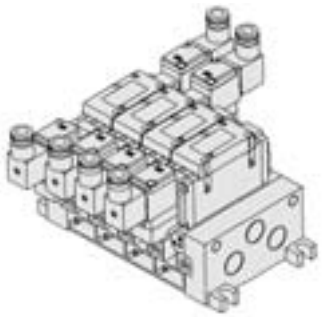

VV5FR3 – 40 – 05 1 – 02 ☐ – ☐

Note) Manifold base is in common with "VV5FR3-10".

- Series VFR3000 Manifold
- Non plug-in type Individual electrical entry
- Stations

02	2 stations
⋮	⋮
10	10 stations

- Symbol

Symbol	Passage P	Passage EA, EB	Porting specifications (A, B)
1	Common	Common	Side
2			Bottom *

* Option

- Port size

Symbol	P, EA, EB	A, B *
02	½	¼
03		⅜
C8		One-touch fitting for ø8
C10		One-touch fitting for ø10
M		Mixed

* For bottom ported: Rc 1/4, 3/8 only.

- Thread type

Nil	Rc
F	G
N	NPT
T	NPTF

- CE-compliant

Nil	—
Q	CE-compliant

Note) Manifold base is in common with Series VFS3000.

Manifold/Option Parts Assembly

Individual SUP spacer
Setting individual SUP spacer on the manifold block enables individual SUP port for each valve.

Body type	Plug-in type	Non plug-in type
Part no.	VVFS3000-P-03-1	VVFS3000-P-03-2

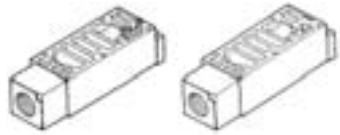

Individual EXH spacer
Setting individual EXH spacer on the manifold block enables individual EXH port for each valve.

Body type	Plug-in type	Non plug-in type
Part no.	VVFS3000-R-03-1	VVFS3000-R-03-2

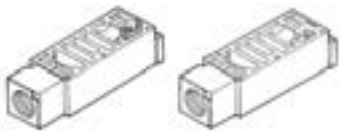

SUP block disk
When supplying manifold with more than two different pressures, high and low, insert a block disk in between stations subjected to different pressures.

Body type	Plug-in type	Non plug-in type
Part no.	AXT636-1A	

EXH block disk
When valve exhaust affects the other stations on the circuit, insert EXH block disk in between stations to separate valve exhaust.

Body type	Plug-in type	Non plug-in type
Part no.	AXT636-1A	

Throttle valve spacer
Needle valve set on the manifold block can control cylinder speed by throttling exhaust.

Body type	Plug-in type	Non plug-in type
Part no.	VVFS3000-20A-1	VVFS3000-20A-2

Shape

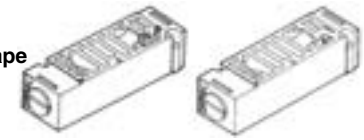

Interface regulator
Interface regulator set on the manifold block can regulate pressure for each valve. (Refer to "Flow Characteristics" on page 1324 before operation.)

Body type	Plug-in type	Non plug-in type
P port regulation	ARBF3050-00-P-1	ARBF3050-00-P-2
A port regulation	ARBF3050-00-A-1	ARBF3050-00-A-2
B port regulation	ARBF3050-00-B-1	ARBF3050-00-B-2

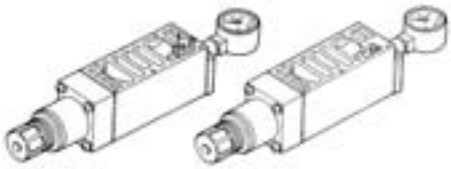

SUP stop valve spacer
If SUP stop valve spacer is set, valve can be removed for maintenance without stopping air pressure supply for other valves.

Body type	Plug-in type	Non plug-in type
Part no.	VVFS3000-37A-1	VVFS3000-37A-2

(Height will be 27.5 mm higher.)

Blanking plate
It is used by attaching on the manifold block for being prepared for removing a valve for maintenance reasons or planning to mount a spare valve, etc.

Body type	Plug-in type	Non plug-in type
Part no.	VVFS3000-10A	

∗ Mounting screws: 4 positions

Manifold Option

With exhaust cleaner
Plug-in type/Non plug-in type
- Valve exhaust noise dampening: 35 dB or more.
- Collects oil mist: collecting rate 99.9% or more
- Piping process reduced.

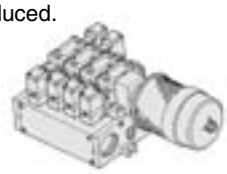

For details, refer to page 1266.

With control unit
Plug-in type/Non plug-in type
- Filter, regulation valve, pressure switch and air release valve are all combined to form one unit.
- Piping processes are eliminated.

For details, refer to page 1269.

Manifold: Plug-in Type

With terminal block: VV5FR3-01T-Station 1-Port size

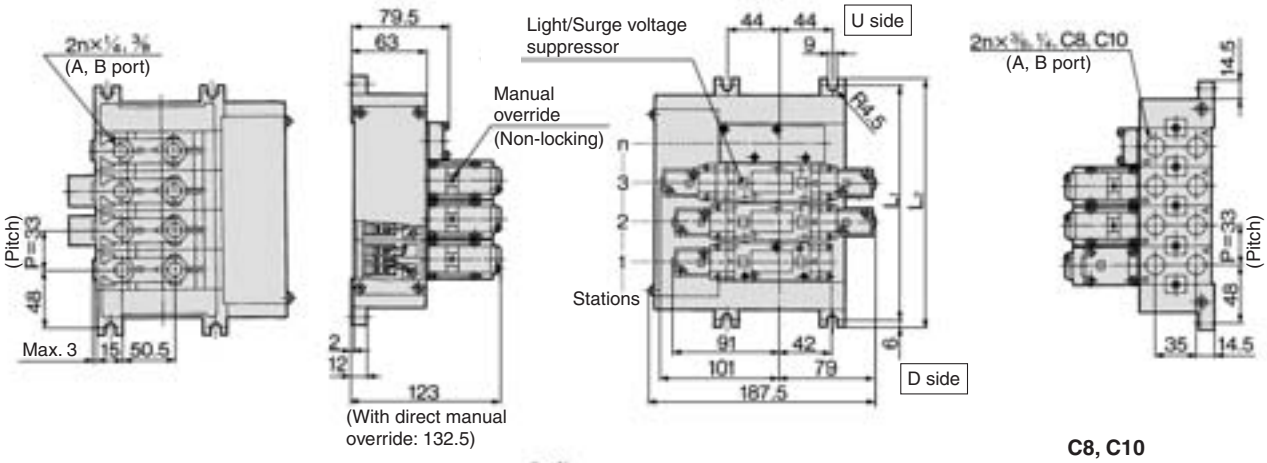

Bottom ported: VV5FR3-01T-Station 2-Port size

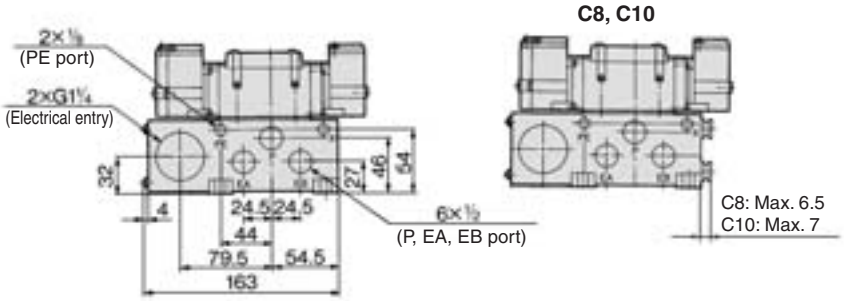

n: Station

L \ Stations	2	3	4	5	6	7	8	9	10	Formula
L_1	129	162	195	228	261	294	327	360	393	$L_1 = 33 \times n + 63$
L_2	141	174	207	240	273	306	339	372	405	$L_2 = 33 \times n + 75$

With multi-connector: VV5FR3-01CD-Station 1-Port size, VV5FR3-01CU-Station 1-Port size

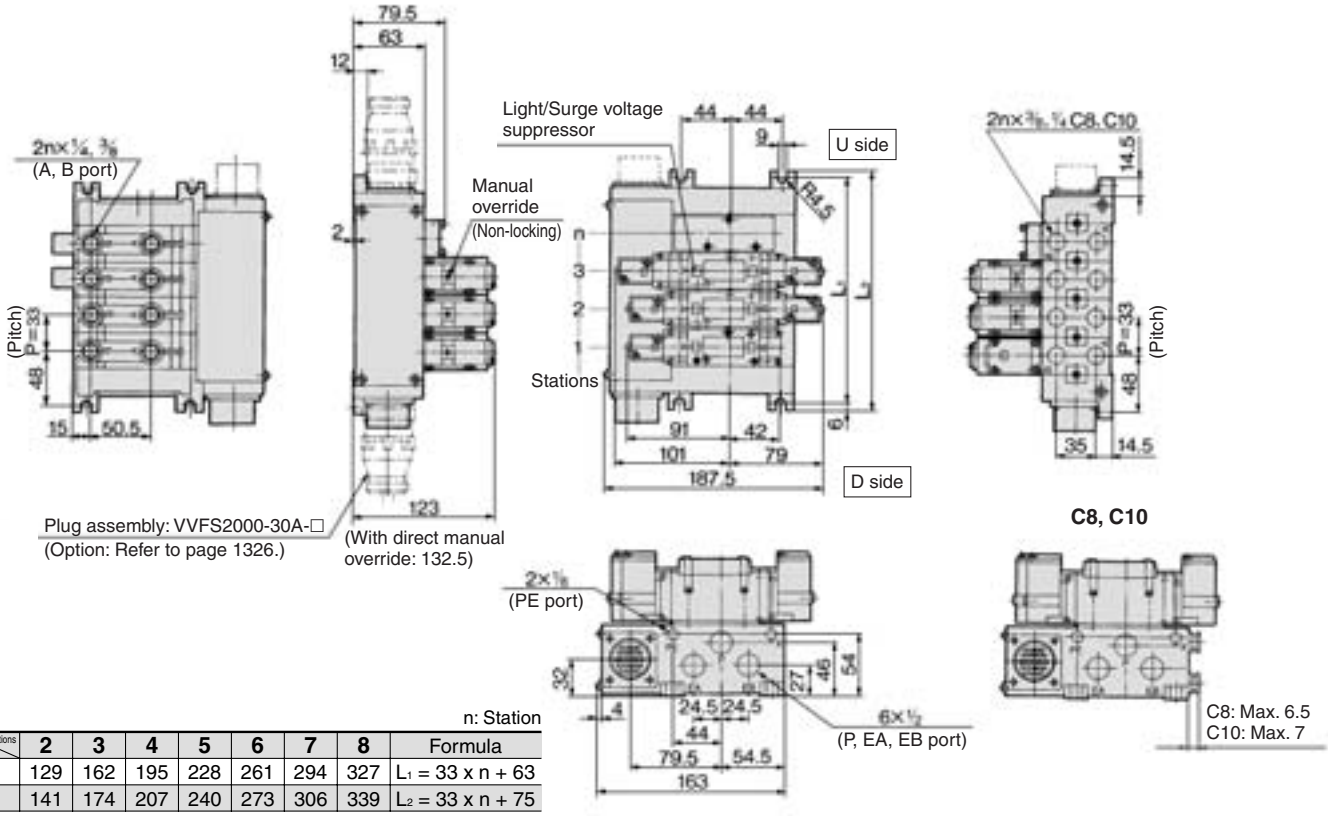

n: Station

L \ Stations	2	3	4	5	6	7	8	Formula
L_1	129	162	195	228	261	294	327	$L_1 = 33 \times n + 63$
L_2	141	174	207	240	273	306	339	$L_2 = 33 \times n + 75$

Manifold: Plug-in Type

With D-sub connector: VV5FR3-01FD-Station 1-Port size, VV5FR3-01FU-Station 1-Port size

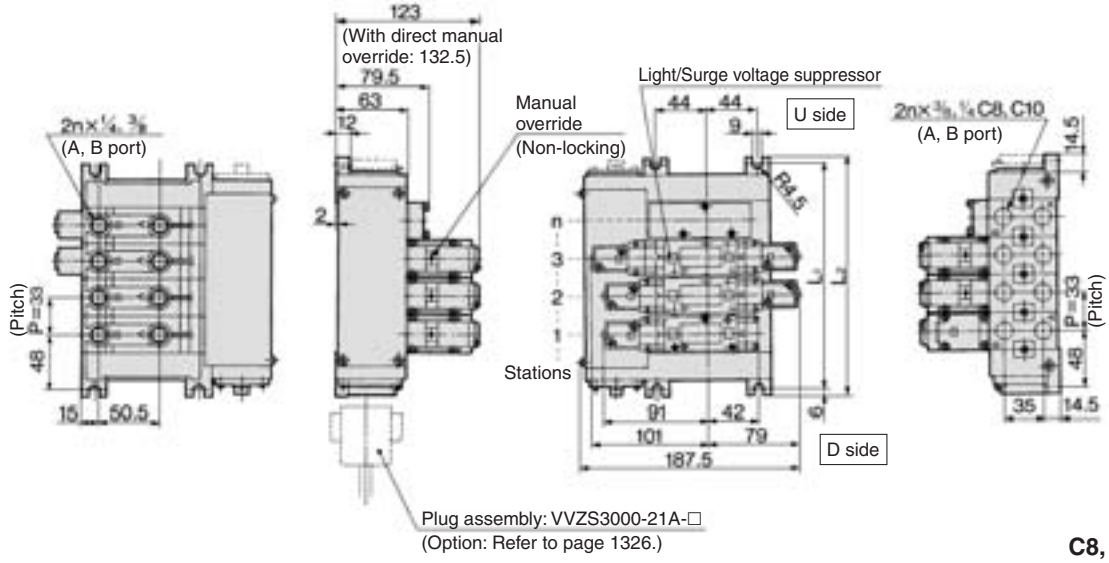

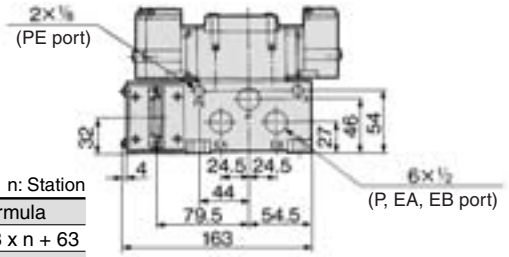

C8, C10

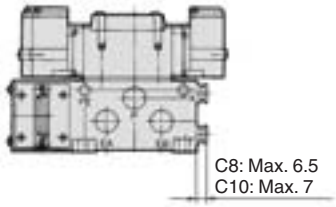

For wiring specifications, refer to page 1326.

n: Station

L \ Stations	2	3	4	5	6	7	8	Formula
L_1	129	162	195	228	261	294	327	$L_1 = 33 \times n + 63$
L_2	141	174	207	240	273	306	339	$L_2 = 33 \times n + 75$

Manifold: Non Plug-in Type

VV5FR3-10-Station 1-Port size

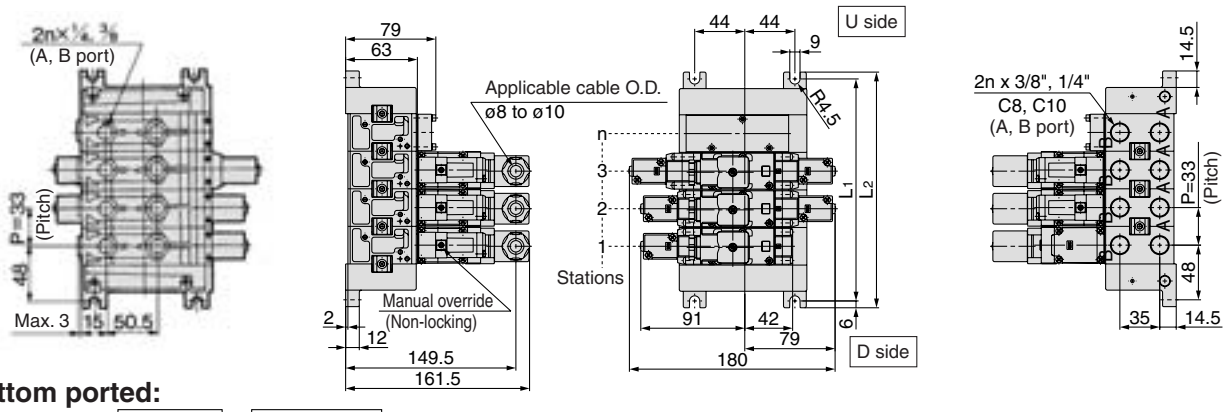

Bottom ported:
VV5FR3-10-Station 2-Port size

C8, C10

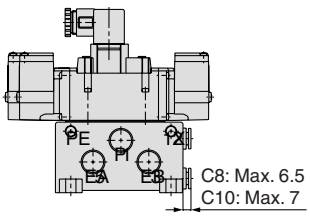

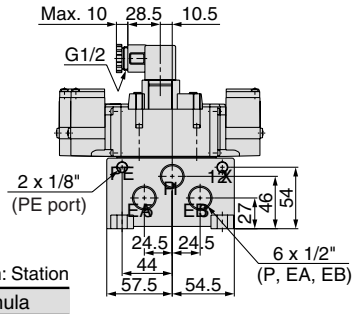

Grommet with terminal

n: Station

L \ Stations	2	3	4	5	6	7	8	9	10	Formula
L_1	129	162	195	228	261	294	327	360	393	$L_1 = 33 \times n + 63$
L_2	141	174	207	240	273	306	339	372	405	$L_2 = 33 \times n + 75$

Manifold: Plug-in Type

VV5FR3-40-Station 1-Port size

G: Grommet

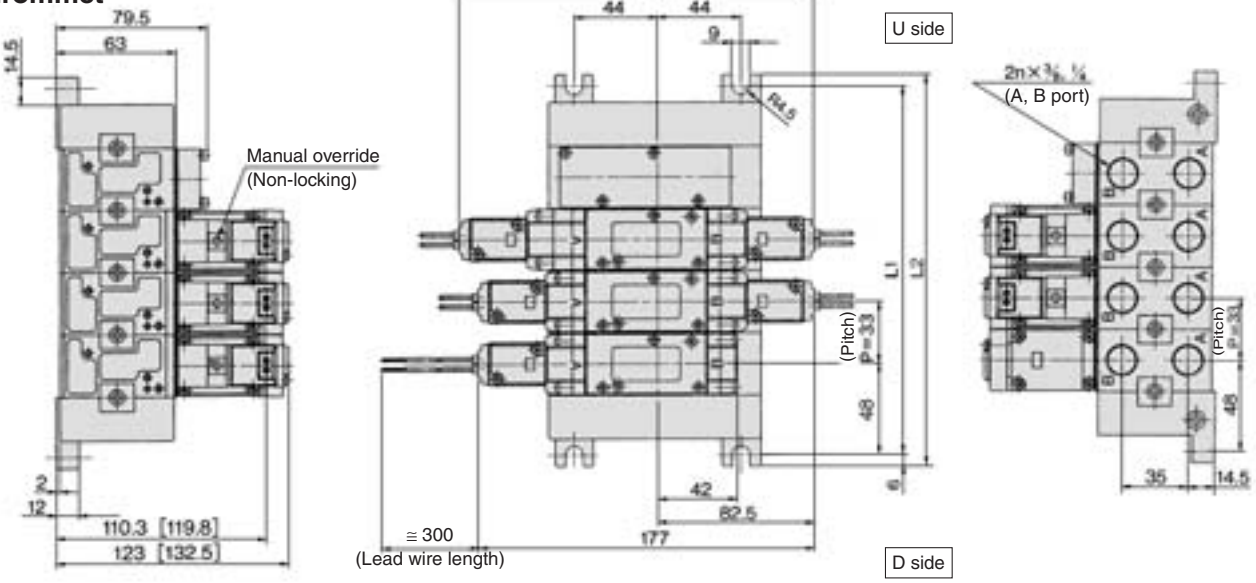

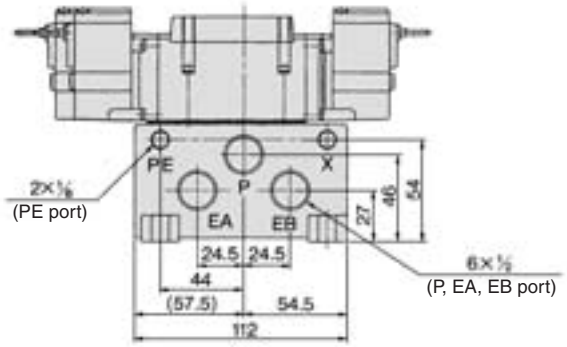

n: Station

L \ Stations	2	3	4	5	6	7	8	9	10	Formula
L_1	129	162	195	228	261	294	327	360	393	$L_1 = 33 \times n + 63$
L_2	141	174	207	240	273	306	339	372	405	$L_2 = 33 \times n + 75$

[ ]: With direct manual override

E: Grommet terminal

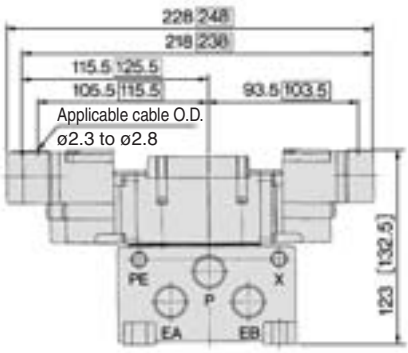

: With light/surge voltage suppressor

T: Conduit terminal

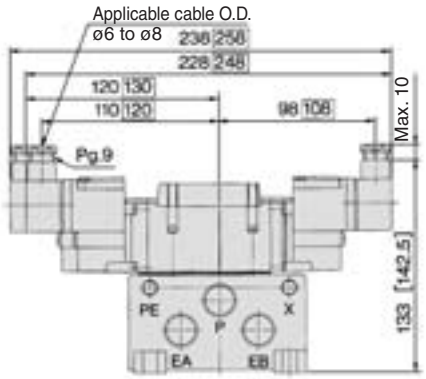

: With light/surge voltage suppressor

D, Y: DIN terminal

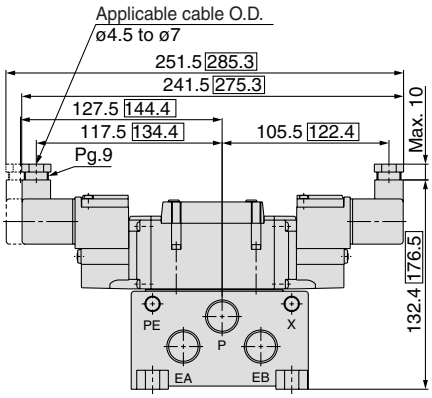

: With light/surge voltage suppressor

Manifold/Option Parts Assembly: Plug-in Type/Non Plug-in Type

Individual SUP spacer:
VVFS3000-P-03-1 (Plug-in type)
VVFS3000-P-03-2 (Non plug-in type)

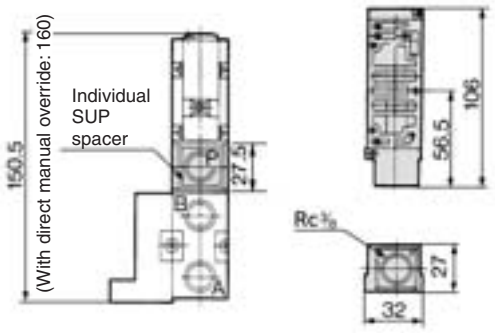

Individual EXH spacer:
VVFS3000-R-03-1 (Plug-in type)
VVFS3000-R-03-2 (Non plug-in type)

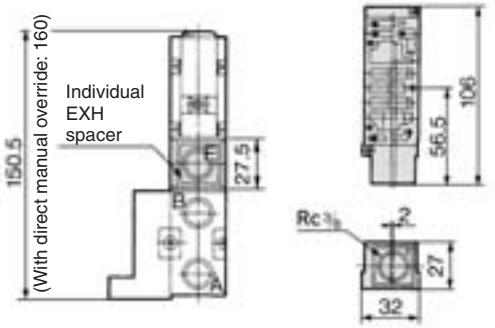

SUP/EXH block disk: AXT636-1A

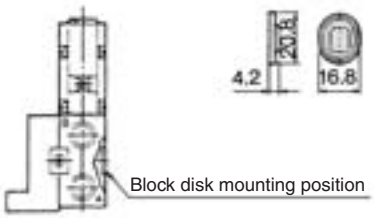

Note) Used with exclusive manifold block

Throttle valve spacer:
VVFS3000-20A-1 (Plug-in type)
VVFS3000-20A-2 (Non plug-in type)

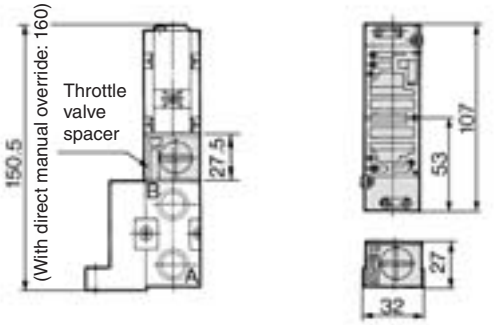

Interface regulator/P port regulation:
ARBF3050-00-P-1 (Plug-in type)
ARBF3050-00-P-2 (Non plug-in type)

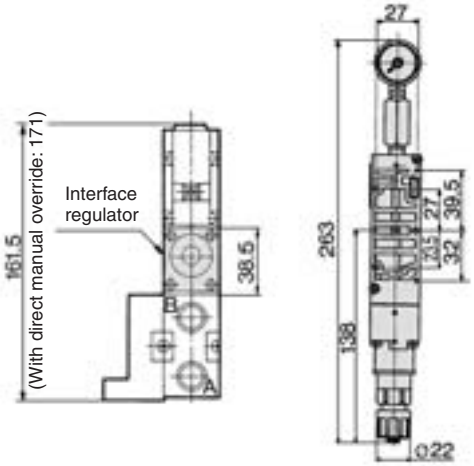

Interface regulator/A port regulation:
ARBF3050-00-A-1 (Plug-in type)
ARBF3050-00-A-2 (Non plug-in type)

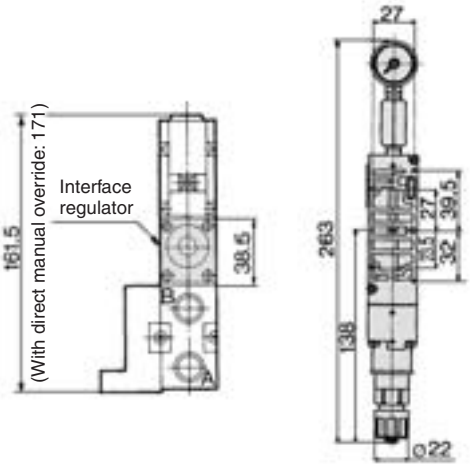

Interface regulator/B port regulation:
ARBF3050-00-B-1 (Plug-in type)
ARBF3050-00-B-2 (Non plug-in type)

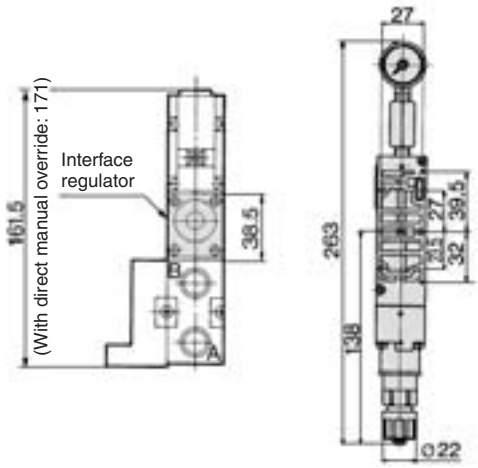

Manifold with Exhaust Cleaner

- **Serves to protect working environment.**
- **Valve exhaust noise dampening: 35 dB or more.**
- **Collection rate of drainage and oil mist: 99.9% or more**
- **Piping work is reduced.**

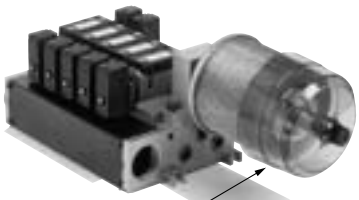

Plug-in type

Exhaust cleaner AMC610-10 (Option)

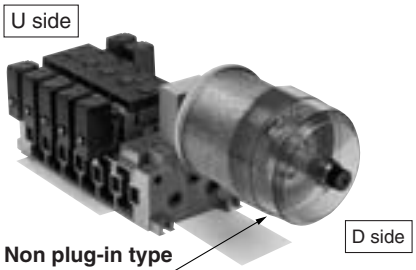

Non plug-in type

Exhaust cleaner AMC610-10 (Option)

Manifold Specifications

Manifold	Plug-in type: **VV5FR3-01□(-Q)**	Non plug-in type: **VV5FR3-10(-Q)**	Non plug-in type: **VV5FR3-40(-Q)**
Wiring	With terminal block With multi-connector With D-sub connector	DIN terminal Grommet terminal	Grommet, Grommet terminal Conduit terminal, DIN terminal
Applicable valve model	VFR3□0□-□F(-Q)	VFR3□1□-□D(-Q) VFR3□1□-□E	VFR3□4□-□G, VFR3□4□-□E VFR3□4□-□T, VFR3□4□-□D(-Q)
Porting specifications Rc	Common SUP, Common EXH		
	A, B port	Side: Rc 1/4, 3/8, C8, C10 Bottom: Rc 1/4, 3/8 (Option)	
	P port	Side: Rc 1/2 EXH port: Rc 1	
Stations	2 to 10 stations (With multi-connector/D-sub connector: 2 to 8 stations)		
Applicable exhaust cleaners	AMC610-10 (Port size: R1) Note)		

Note) Exhaust cleaner "AMC610-10" is not included.

How to Order

VV5FR3 - 10 □ - 06 1 - 03 □ - CD - □

Series VFR3000 Manifold

Base type/ Electrical entry

01T	Plug-in type with terminal block
01C	Plug-in type with multi-connector
01F	Plug-in type with D-sub connector
10	Non plug-in type Common electrical entry
40	Non plug-in type Individual electrical entry

Connector mounting direction

Symbol	With connector	Applicable base
Nil	None	01T, 10, 40
D	D side mounting	01C, 01F
U	U side mounting	

Stations

02	2 stations
⋮	⋮
10 Note)	10 stations

Note) • Base 01T/10/40: 2 to 10 stations
• Base 01C/01F: 2 to 8 stations

Symbol

Symbol	Passage P	Passage EA, EB	Porting specifications (A, B)
1	Common	Common	Side
2			Bottom *

* Option

Port size

Symbol	P, EA, EB	A, B *
02	1/2	1/4
03		3/8
C8		One-touch fitting for ø8
C10		One-touch fitting for ø10
M		Mixed

* For bottom ported: Rc 1/4, 3/8

Thread type

Nil	Rc
F	G
N	NPT
T	NPTF

Exhaust cleaner mounting direction

Symbol	Exhaust cleaner mounting direction	
CD	D side	D side mounting
CU	U side	U side mounting

CE-compliant

Nil	—
Q	CE-compliant

How to Order Manifold Assembly

<Example> Plug-in type with terminal block (6 stations)

VV5FR3-01T-061-03-CD ..... **1 set (Manifold base part no.)**
***VFR3100-5FZ** ..... **3 sets (2 position single part no.)**
***VFR3200-5FZ** ..... **2 sets (2 position double part no.)**
***VVFS3000-10A** ..... **1 set (Blanking plate assembly part no.)**
***AMC610-10** ..... **1 set (Exhaust cleaner part no.)**

→ The asterisk denotes the symbol for assembly. Prefix it to the part nos. of the solenoid valve, etc.

Valve arrangement is counted from the D side.
When ordering, specify the part nos. in order from the 1st. station in the D side.
When entry of part numbers becomes complicated, indicate on the manifold specification sheet.

<Example> Non plug-in type: 6 stations

VV5FR3-10-061-03-CU ..... **1 set (Manifold base part no.)**
***VFR3110-5E** ..... **3 sets (2 position single part no.)**
***VFR3210-5E** ..... **2 sets (2 position double part no.)**
***VVFS3000-10A** ..... **1 set (Blanking plate assembly part no.)**
***AMC610-10** ..... **1 set (Exhaust cleaner part no.)**

→ The asterisk denotes the symbol for assembly. Prefix it to the part nos. of the solenoid valve, etc.

Valve arrangement is counted from the D side.
When ordering, specify the part nos. in order from the 1st. station in the D side.
When entry of part numbers becomes complicated, indicate on the manifold specification sheet.

⚠ Caution

When using an exhaust cleaner, mount it downwards.

Refer to Best Pneumatics No. 6 for Exhaust Cleaner details.

Manifold with Exhaust Cleaner: Plug-in Type/Non Plug-in Type

Plug-in type: VV5FR3-01T-Station 1-Port size-CD/CU

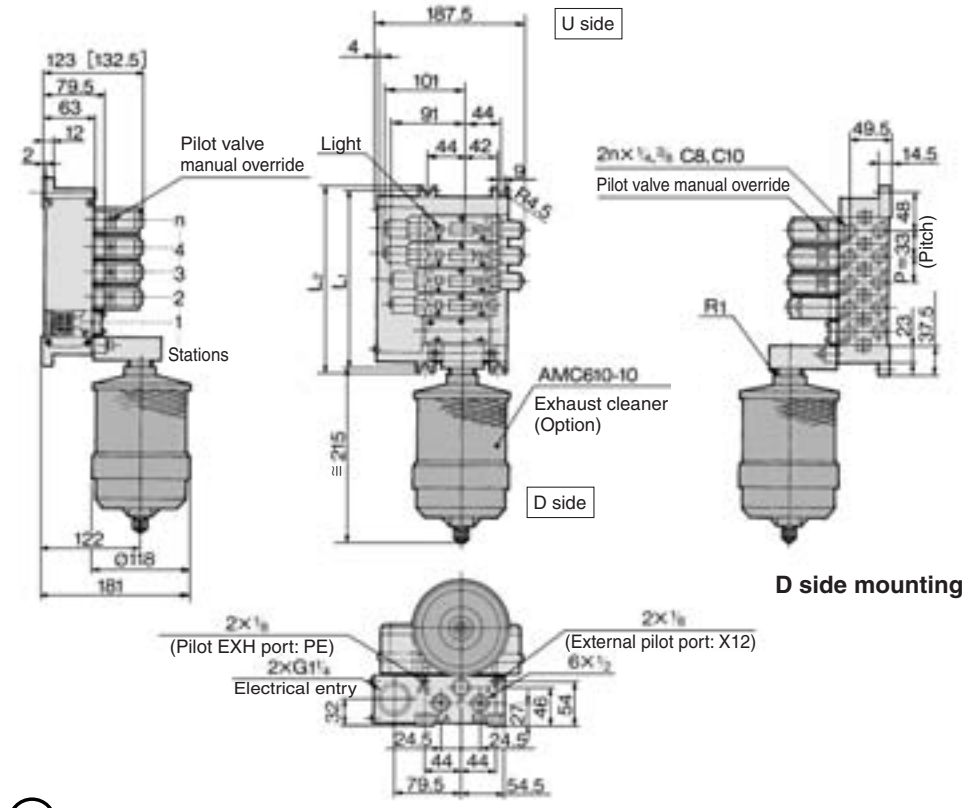

D side mounting

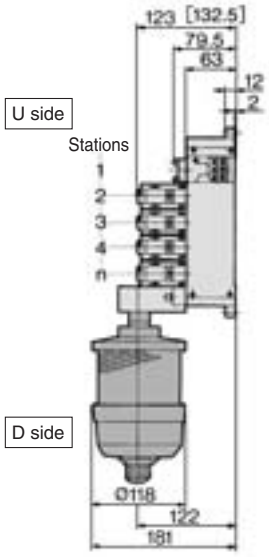

U side mounting

[ ]: With direct manual override

Non plug-in type: VV5FR3-10-Station 1-Port size-CD/CU

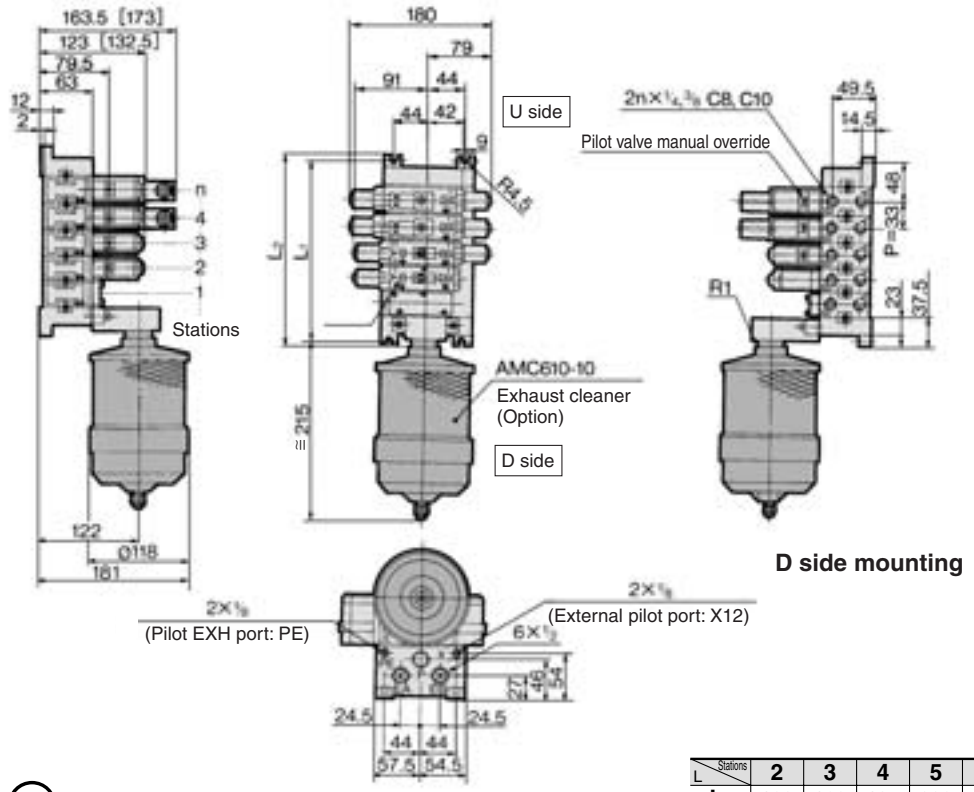

D side mounting

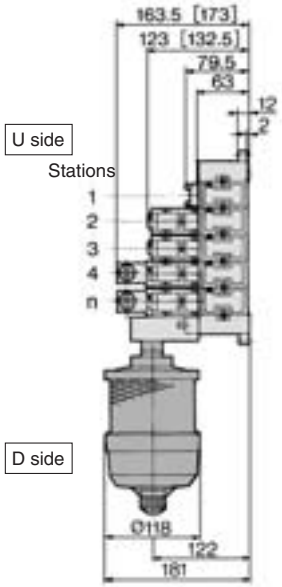

U side mounting

[ ]: With direct manual override

n: Station

L \ Stations	2	3	4	5	6	7	8	9	10	Formula
L_1	129	162	195	228	261	294	327	360	393	$L_1 = 33 \times n + 63$
L_2	141	174	207	240	273	306	339	372	405	$L_2 = 33 \times n + 75$

Manifold with Exhaust Cleaner: Non Plug-in Type

Non plug-in type: VV5FR3-40-Station 1-Port size-CD/CU

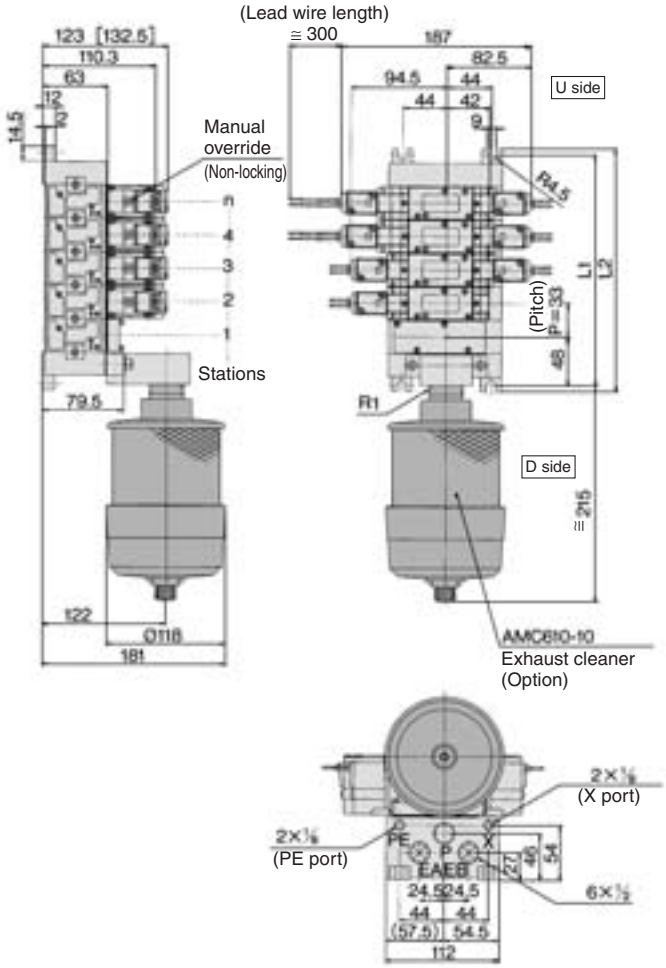

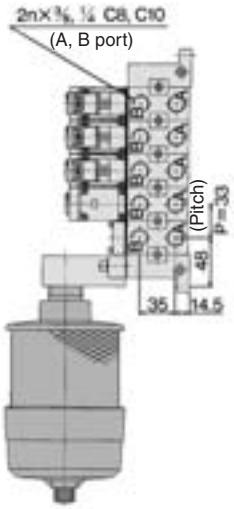

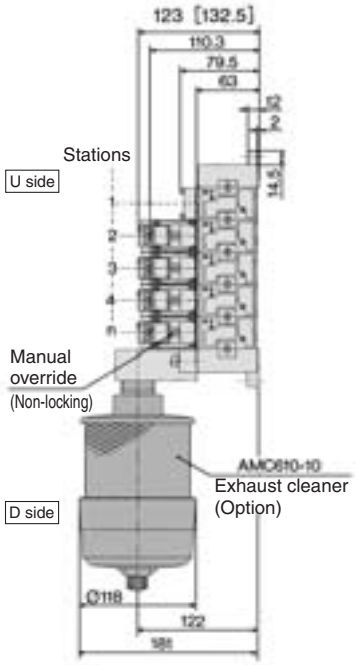

[ ]: With direct manual override

n: Station

L \ Stations	2	3	4	5	6	7	8	9	10	Formula
L_1	129	162	195	228	261	294	327	360	393	$L_1 = 33 \times n + 63$
L_2	141	174	207	240	273	306	339	372	405	$L_2 = 33 \times n + 75$

Manifold with Control Unit

- **Control unit (Filter, Regulator, Pressure switch, Air release valve) are all standardized to the one unit, and can be mounted on the manifold base without any attachments.**
- **Piping processes are eliminated.**

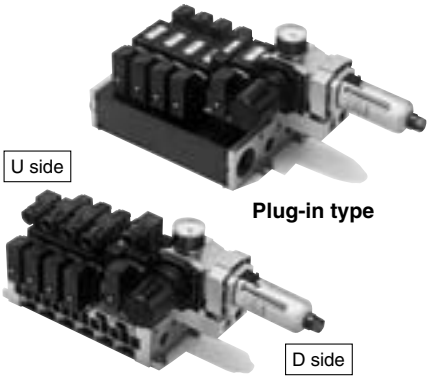

Plug-in type

Non plug-in type

⚠ Caution

Air filter with auto-drain or manual drain must be mounted with the air filter at the bottom.

Manifold Specifications

Manifold	Plug-in type: **VV5FR3-01□(-Q)**	Non plug-in type: **VV5FR3-10(-Q)**	Non plug-in type: **VV5FR3-40(-Q)**
Wiring	With terminal block With multi-connector With D-sub connector	DIN terminal Grommet terminal	Grommet, Grommet terminal Conduit terminal, DIN terminal
Applicable valve model	VFR3□0□-□F(-Q)	VFR3□1□-□D(-Q) VFR3□1□-□E	VFR3□4□-□G, VFR3□4□-□E VFR3□4□-□T, VFR3□4□-□ D/Y (-Q)
Porting specifications	Common SUP, Common EXH		
	A, B port	Side: Rc 1/4, 3/8, C8, C10 Bottom: Rc 1/4, 3/8 (Option)	
	P, EA, EB port	Side: Rc 1/2	
Stations	2 to 10 (With multi-connector/D-sub connector: 2 to 8) *		

* Including station of control unit

Control Unit Specifications

Air filter (With auto-drain/With manual drain)	
Filtration degree	5 μm
Regulator	
Set pressure (Outlet pressure)	0.05 to 0.85 MPa
Pressure switch	
Set pressure range: OFF	0.1 to 0.6 MPa
Differential	0.08 MPa
Contact	1a
Indicator light	LED (RED)
Max. switch capacity	2 VA AC, 2 W DC
Max. operating current	24 VAC, DC or less: 50 mA 100 VAC, DC: 20 mA
Inside voltage drop	4 V or less
Air release valve (Single only)	
Operating pressure range	0.2 to 0.9 MPa

Control Unit/Option

Air release valve spacer (1)	<Plug-in type> VVFS3000-24A-1R (D side mounting)	
	<Non plug-in type> VVFS3000-24A-2R (D side mounting)	
Pressure switch (2)	IS1000P-2-1	
Blanking plate	For filter regulator	MP2-3
	For pressure switch	MP3-2
	For air release valve	VVFS3000-24A-10
Filter element	INA-13-854-12-5B	

Note 1) Combining valve "VFR31□□" (single) and release valve spacer makes it possible to use this as an air release valve.
Note 2) Pressure switch cannot be mounted later on non plug-in type.

How to Order

VV5FR3 – 10 ☐ – 08 1 – 02 ☐ – AP ☐ – ☐

Series VFR3000 Manifold

Base type/Electrical entry

01T	Plug-in with terminal block
01C	Plug-in with multi-connector
01F	Plug-in type with D-sub connector
10	Non plug-in type (Common entry)
40	Non plug-in type (Individual entry)

Connector mounting direction

Symbol	With connector	Applicable base
Nil	None	01T, 10, 40
D	D side mounting	01C, 01F
U	U side mounting	

Stations

02	2 stations
⋮	⋮
10 Note)	10 stations

Note) • Base 01T/10/40: 2 to 10 stations
• Base 01C/01F: 2 to 8 stations
• Including stations of control unit.

Symbol

Symbol	Passage		Porting specifications (A, B)
	P	EA, EB	
1	Common	Common	Side
2			Bottom *

* Option

Port size

Symbol	P, EA, EB	A, B *
02	1/2	1/4
03		3/8
C8		One-touch fitting for ø8
C10		One-touch fitting for ø10
M		Mixed

* For bottom ported: only 1/4, 3/8

Thread type

Nil	Rc
F	G
N	NPT
T	NPTF

Control unit type

Symbol / Control equipment	Nil	MP	AP	M	A	G	F	C	E
Air release valve		●	●	●	●			●	●
Air filter regulator with manual drain		●		●		●			
Air filter regulator with auto-drain			●		●		●		
Pressure switch		●	●						
Blanking plate (Air release valve)						●	●		
Blanking plate (Filter regulator)								●	
Blanking plate (Pressure switch)				●	●	●	●	●	
Required stations		2 stations							1 station

Note) Control unit is D side mounting only.

Control unit type

Nil	None
1	100 VAC, 50/60 Hz
5	24 VDC
9	Other

CE-compliant

Nil	—
Q	CE-compliant

How to Order Manifold Assembly

<Example> Plug-in type with terminal block

VV5FR3-01T-081-03-AP5 ..... **1 set (Manifold base part no.)**
***VFR3100-5FZ** ..... **4 sets (2 position single part no.)**
***VFR3200-5FZ** ..... **2 sets (2 position double part no.)**
→ The asterisk denotes the symbol for assembly. Prefix it to the part nos. of the solenoid valve, etc.

The 1st and 2nd station are used for control unit mounting.
When ordering, specify the part nos. in order from the 3rd. station in the D side.
When entry of part numbers becomes complicated, indicate on the manifold specification sheet.

<Example> Non plug-in type

VV5FR3-10-061-03-A5 ..... **1 set (Manifold base part no.)**
***VFR3110-5D** ..... **4 sets (2 position single part no.)**
→ The asterisk denotes the symbol for assembly. Prefix it to the part nos. of the solenoid valve, etc.

The 1st and 2nd station are used for control unit mounting.
When ordering, specify the part nos. in order from the 3rd. station in the D side.
When entry of part numbers becomes complicated, indicate on the manifold specification sheet.

Manifold with Control Unit: Plug-in Type/Non Plug-in Type

Plug-in type:

VV5FR3-01T-[Station]1-[Port size]-AP[Voltage of air release valve]

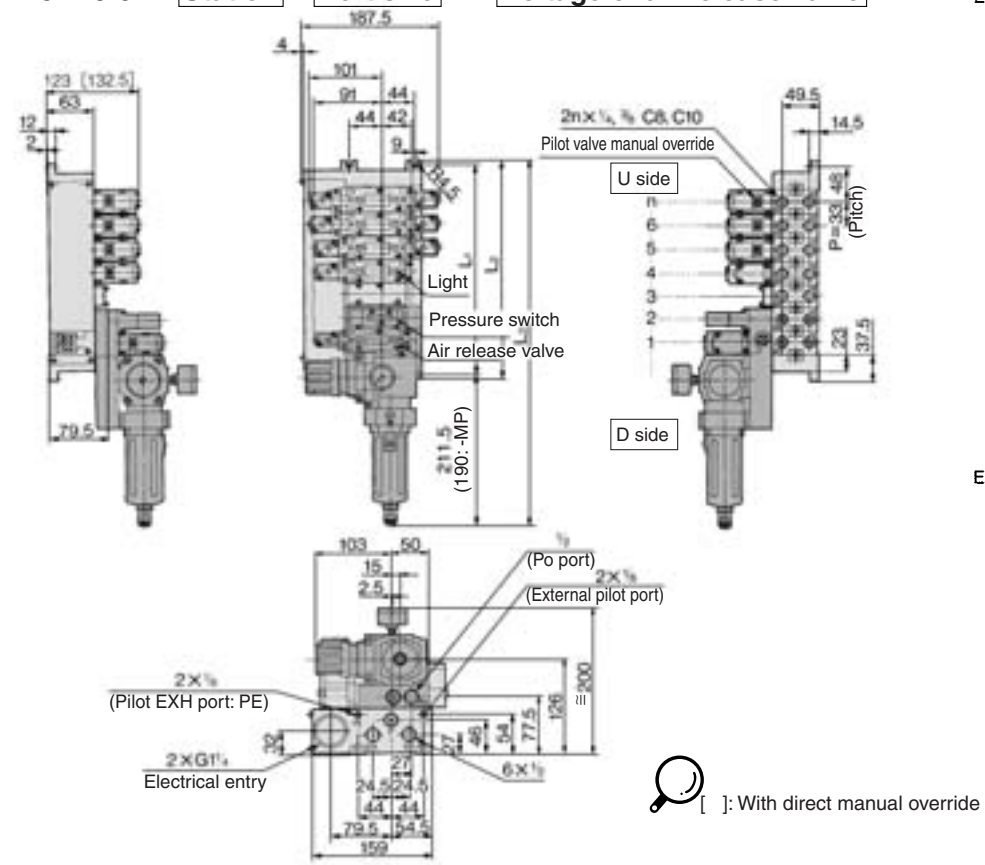

Example for manifold

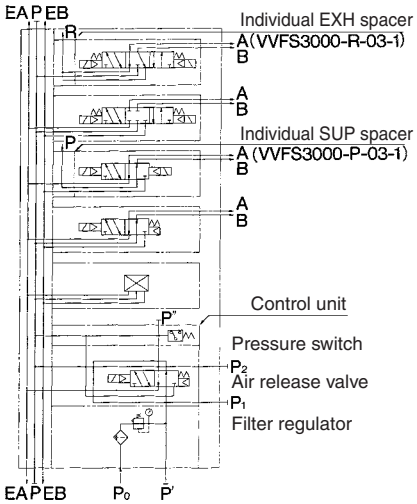

Non plug-in type:

VV5FR3-10-[Station]1-[Port size]-AP[Voltage of air release valve]

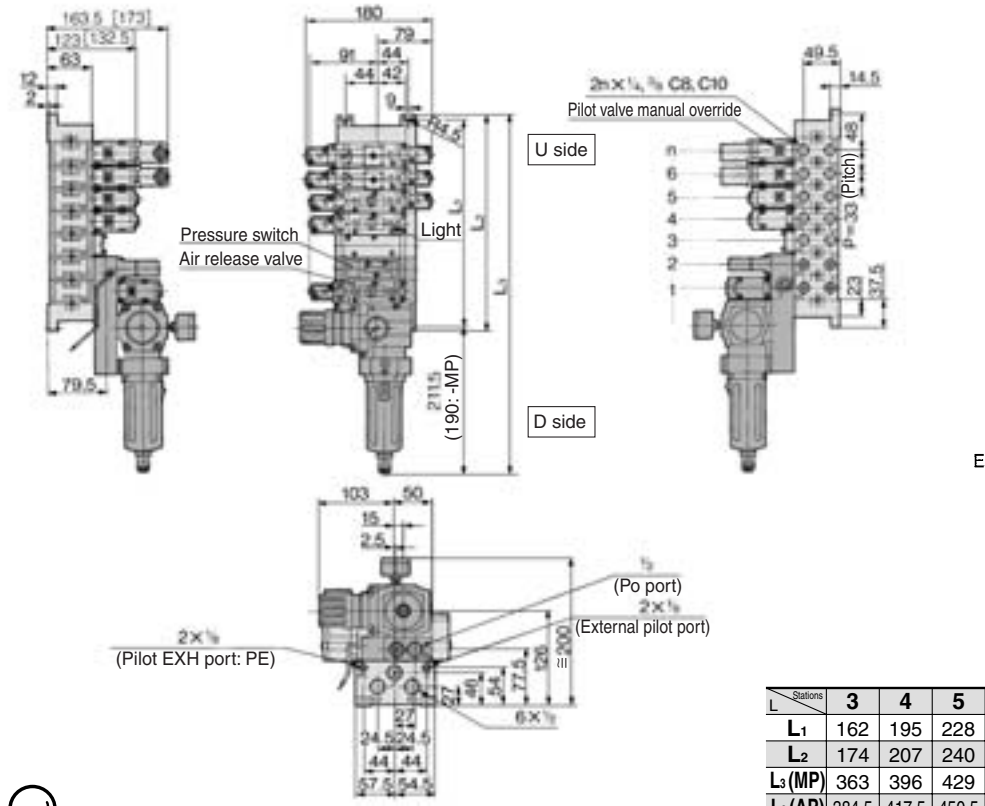

Example for manifold

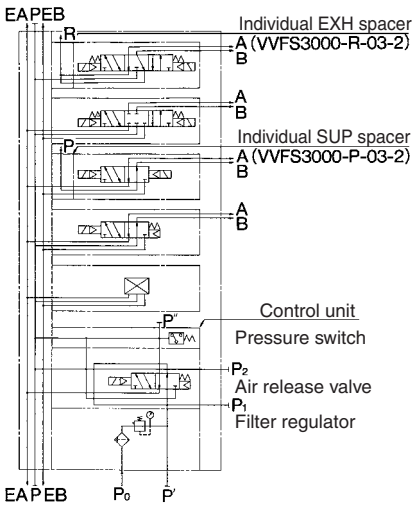

n: Station

L \ Stations	3	4	5	6	7	8	9	10	Formula
L_1	162	195	228	261	294	327	360	393	$L_1 = 33 \times n + 63$
L_2	174	207	240	273	306	339	372	405	$L_2 = 33 \times n + 75$
L_3(MP)	363	396	429	462	495	528	561	594	$L_3 = 33 \times n + 264$
L_3(AP)	384.5	417.5	450.5	483.5	516.5	549.5	582.5	615.5	$L_3 = 33 \times n + 285.5$

Manifold with Control Unit: Non Plug-in Type

Non plug-in type: VV5FR3-40-Station 1-Port size-AP Voltage of air release valve

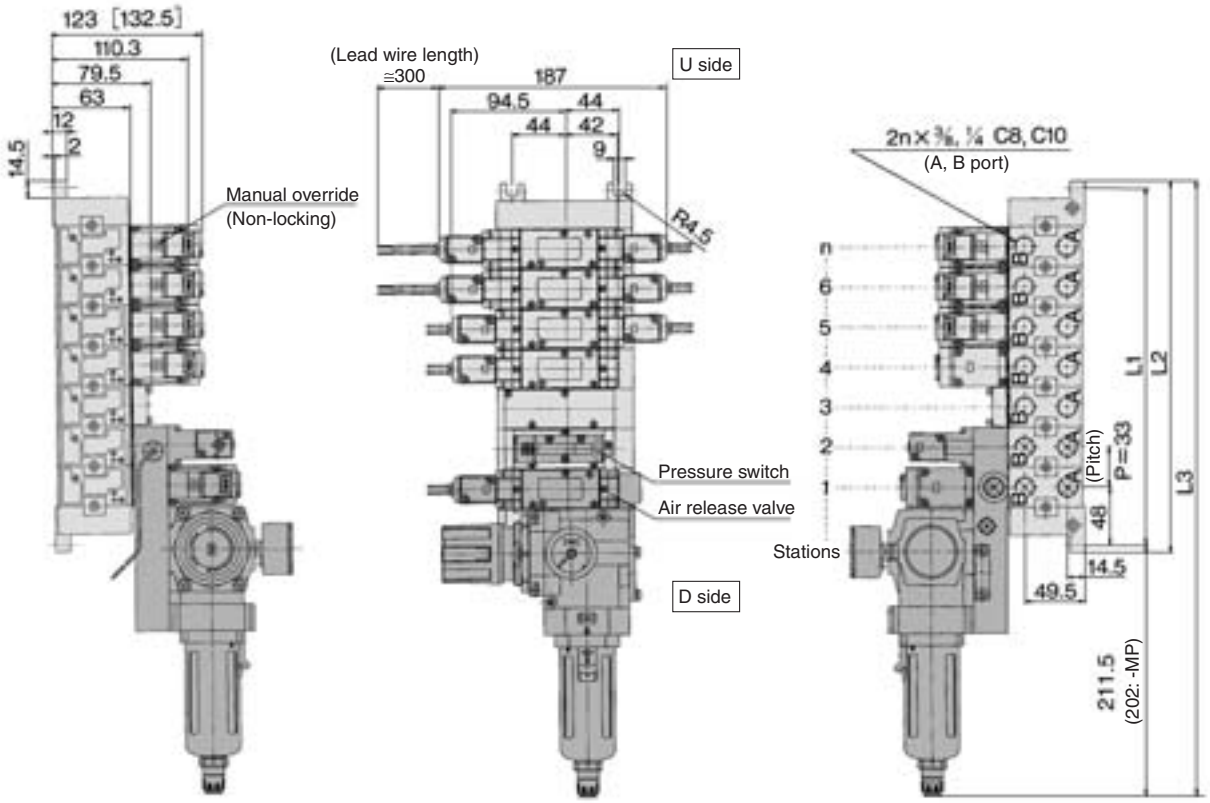

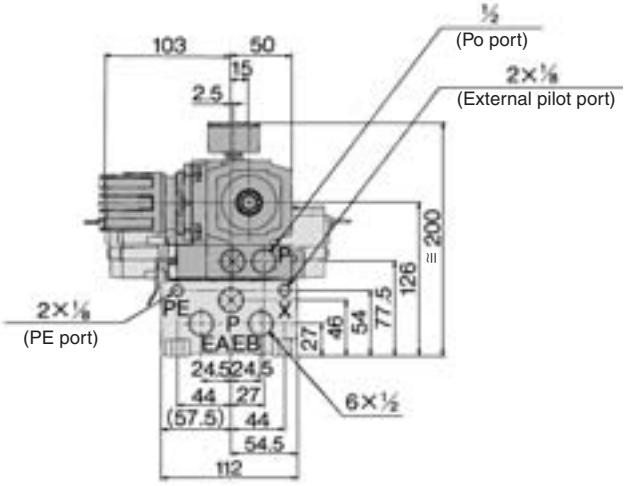

n: Station

L \ Stations	3	4	5	6	7	8	9	10	Formula
L_1	162	195	228	261	294	327	360	393	$L_1 = 33 \times n + 63$
L_2	174	207	240	273	306	339	372	405	$L_2 = 33 \times n + 75$
L_3(MP)	363	396	429	462	495	528	561	594	$L_3 = 33 \times n + 264$
L_3(AP)	384.5	417.5	450.5	483.5	516.5	549.5	582.5	615.5	$L_3 = 33 \times n + 285.5$

[ ]: With direct manual override

( ): MP

Manifold Base Construction: Plug-in Type/Non Plug-in Type

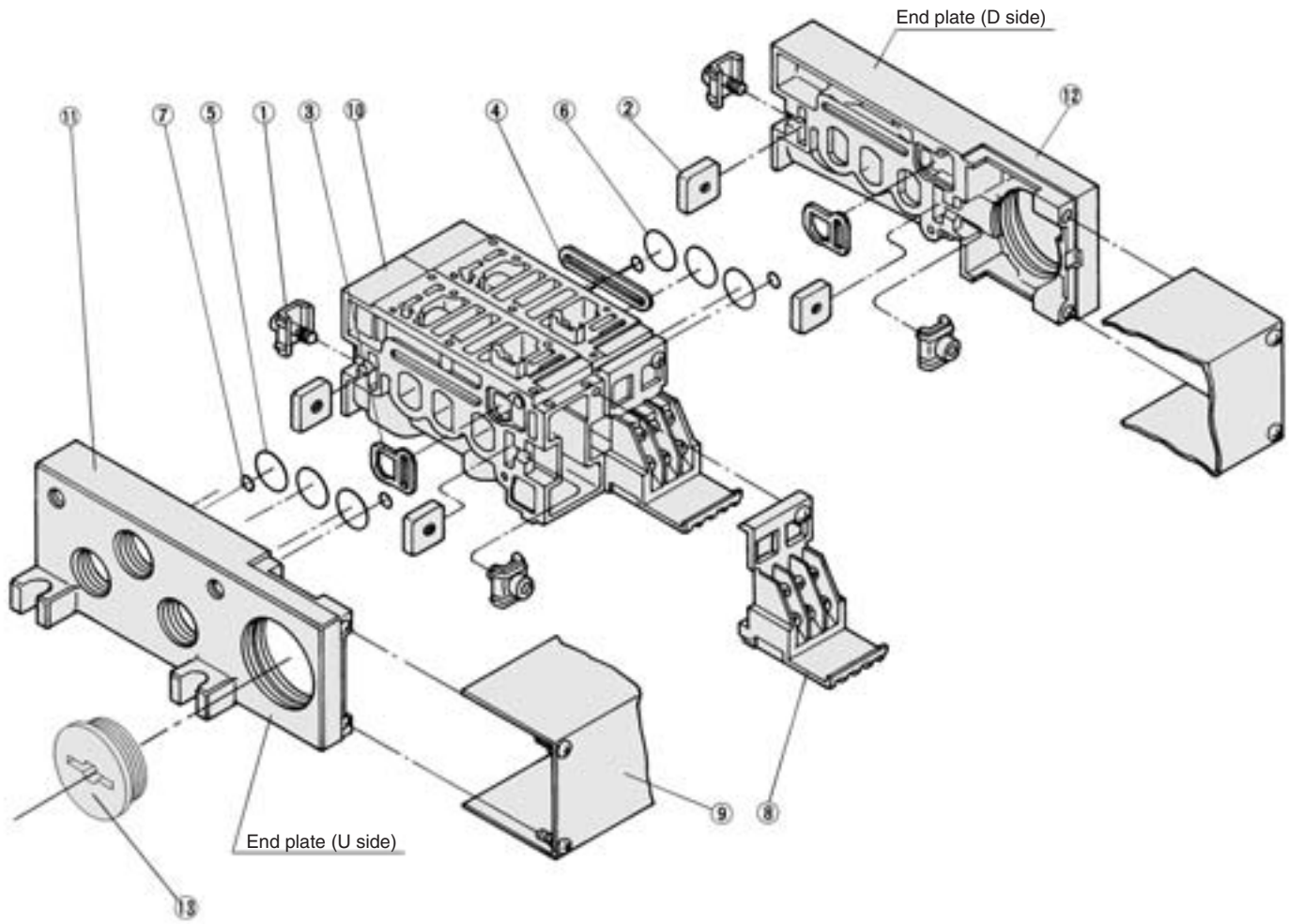

Replacement Parts

No.	Description	Material	Part no.
1	**Connection fitting A**	Steel	VVFS3000-5-1A
2	**Connection fitting B**	Steel	VVFS3000-5-2
3	**Gasket**	NBR	VVFS3000-7-1
4	**Gasket**	NBR	VVFS3000-8
5	**O-ring**	NBR	19.8 x 16.6 x 1.6 (for end plate)
6	**O-ring**	NBR	20 x 16 x 2 (for manifold block)
7	**O-ring**	NBR	6.2 x 3 x 1.6
8	**Terminal assembly**	—	VVFS3000-6A
9	**Junction cover assembly**	—	For 01T VVFS3000-4A-Stations
13	**Rubber plug**	NBR	AXT336-9

Note) Manifold Base/Construction: Plug-in type with terminal block.

Replacement Parts: Sub Assembl

No.	Description	Assembly part no.	Component parts	Applicable manifold base
10	**Manifold block assembly** Note)	VVFS3000-1A-1-02/03/C8/C10	Manifold block ⑩, Terminal ⑧, Connection bracket ①, ②, Gasket ③, ④, O-ring ⑥, ⑦, Receptacle assembly	Plug-in type
		VVFS3000-1A-2-02/03/C8/C10	Manifold block ⑨, Connection bracket ①, ②, Gasket ③, ④, O-ring ⑥, ⑦	Non plug-in type
11	**End plate (U side) assembly**	VVFS3000-2A-1	End plate (U) ⑪, Connection bracket ①, ②, Gasket ④, O-ring ⑤, ⑦	Plug-in type
		VVFS3000-2A-2	End plate (U) ⑪, Connection bracket ①, ②, Gasket ④, O-ring ⑤, ⑦	Non plug-in type
12	**End plate (D side) assembly**	VVFS3000-3A-1	End plate (D) ⑫, Connection bracket ①, ②, Gasket ③	Plug-in type
		VVFS3000-3A-2	End plate (D) ⑫, Connection bracket ①, ②, Gasket	Non plug-in type

Note) For side ported

∗ Contact SMC for CE-compliant products.

5 Port Pilot Operated Solenoid Valve
Rubber Seal, Plug-in/Non Plug-in
Series VFR4000

[Option] NRTL /C

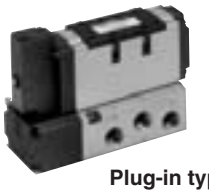

Plug-in type

Non plug-in type

JIS Symbol

2 position	3 position
Single	Closed center
	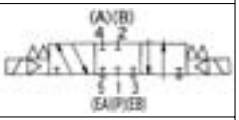
Double	Exhaust center
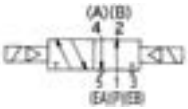	
	Pressure center

Standard Specifications

Valve specifications	Fluid		Air
	Operating pressure range	2 position single/3 position	0.2 to 0.9 MPa
		2 position double	0.1 to 0.9 MPa
	Ambient and fluid temperature		–10 to 50°C (No freezing. Refer to page 5.)
	Lubrication		Non-lube (1)
	Manual override		Non-locking push type
	Mounting orientation		Unrestricted
	Shock/Vibration resistance		300/50 m/s² (2)
	Enclosure		Dustproof
Electricity specifications	Coil rated voltage		100, 200 VAC (50/60 Hz), 24 VDC
	Allowable voltage fluctuation		–15 to –10% of rated voltage
	Apparent power (AC) (3)	Inrush	5.6 VA/50 Hz, 5.0 VA/60 Hz
		Holding	3.4 VA (2.1 W)/50 Hz, 2.3 VA (1.5 W)/60 Hz
	Power consumption (DC) (3)		1.8 W
	Electrical entry	Plug-in type	Conduit terminal
		Non plug-in type	Grommet, Grommet terminal Conduit terminal, DIN terminal

Note 1) Use turbine oil Class 1 (ISO VG32), if lubricated.
Note 2) Impact resistance: No malfunction occurred when it is tested with a drop tester in the axial direction and at the right angles to the main valve and armature in both energized and de-energized states every once for each condition. (Values at the initial period)
Vibration resistance: No malfunction occurred in a one-sweep test between 45 and 2000 Hz. Test was performed at both energized and de-energized states in the axial direction and at the right angles to the main valve and armature. (Values at the initial period)
Note 3) At rated voltage

Option Specifications

Pilot type		External pilot Note)
Manual override	Main valve	Direct manual override
	Pilot valve	Non-locking push type A (Extended), Locking type B (Tool required), Locking type C (Lever)
Coil rated voltage		110 to 120, 220, 240 VAC 50/60 Hz
		12 VDC
Porting specifications		Bottom ported
Option		With light/surge voltage suppressor

Note) Operating pressure: 2 position 0 to 0.9 MPa
3 position 0.15 to 0.9 MPa
Pilot pressure: 2 position single 0.2 to 0.9 MPa
2 position double 0.1 to 0.9 MPa
3 position 0.5 x P + 0.1 to 0.9 MPa
(P: Operating pressure)

Model

Type of actuation		Model: Plug-in	Model: Non plug-in	Port (1) size	Flow characteristics (2) 1 → 4/2 (P → A/B) C [dm³/(s·bar)]	b	Cv	4/2 → 5/3 (A/B → EA/EB) C [dm³/(s·bar)]	b	Cv	Max.(3) operating cycle (Hz)	(4) Response time (ms)	(5) Mass (kg)
2 position	Single	VFR410□	VFR411□	3/8	13	0.30	3.2	14	0.28	3.4	5	50 or less	1.10 (1.04) <1.04>
			VFR414□	1/2	15	0.30	3.8	14	0.30	3.8			
	Double	VFR420□	VFR421□	3/8	14	0.31	3.4	14	0.26	3.4	5	50 or less	1.20 (1.16) <1.16>
			VFR424□	1/2	15	0.30	4.0	14	0.30	3.7			
3 position	Closed center	VFR430□	VFR431□	3/8	13	0.32	3.2	13	0.25	3.0	3	50 or less	1.20 (1.16) <1.16>
			VFR434□	1/2	14	0.28	3.5	13	0.29	3.4			
	Exhaust center	VFR440□	VFR441□	3/8	13	0.31	3.2	14 [13]	0.32 [0.30]	3.6 [3.2]	3	70 or less	1.20 (1.16) <1.16>
			VFR444□	1/2	14	0.30	3.7	14 [13]	0.32 [0.30]	3.6 [3.2]			
	Pressure center	VFR450□	VFR451□	3/8	13 [5.0]	0.27 [0.42]	3.2 [1.3]	13	0.28	3.1	3	70 or less	1.20 (1.16) <1.16>
			VFR454□	1/2	15 [5.3]	0.22 [0.42]	3.7 [1.5]	13	0.28	3.3			

Note 1) EA, EB port: Rc 3/8
Note 2) [ ]: Normal position
Note 3) Min. operating frequency is once in 30 days.
Note 4) Based on dynamic performance test, JIS B 8375-1981. (0.5 MPa, Coil temperature: 20°C, at rated voltage, without surge voltage suppressor)
Note 5) For VFR4□00-□FZ-$^{03}_{04}$, ( ): VFR4□10- DZ□-$^{03}_{04}$, < >: VFR4□40-□G-$^{03}_{04}$

How to Order

Electrical entry

F: Plug-in type, conduit type

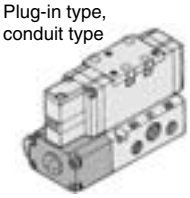

Option

Nil	None
Z	With light/surge voltage suppressor

Porting specifications (P, A, B, EA, EB port)

Nil	Side ported
B *	Bottom ported

* Option. no bottom piping for external pilot.

Port size (P, A and B port)

Nil	Without sub-plate
03	3/8
04 *	1/2

EA, EB port: Rc 3/8

Thread type

Nil	Rc
F	G
N	NPT
T	NPTF

CE-compliant

Nil	—
Q	CE-compliant *

* Electrical entry: D, Y and F only

Plug-in	VFR4	□	0	0	□	–	5	F	□	□	–	□	03	□	–	□
Non plug-in	VFR4	□	1	1	□	–	1	D	□	□	–	□	03	□	–	□
Non plug-in	VFR4	□	4	0	□	–	1	G	□	□	–	□	03	□	–	□

Common electrical entry

Individual electrical entry

Symbol

1	2 position single
2	2 position double
3	3 position closed center
4	3 position exhaust center
5	3 position pressure center

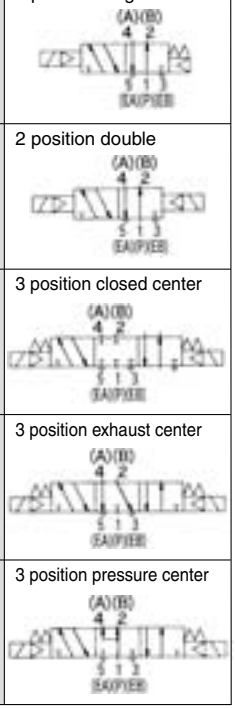

Body option

0	Standard
1 *	Direct manual override

* Option

Pilot type

Nil	Internal pilot
R *	External pilot

* Option

Coil rated voltage

1	100 VAC, 50/60 Hz
2	200 VAC, 50/60 Hz
3 *	110 V to 120 VAC, 50/60 Hz
4 *	220 VAC, 50/60 Hz
5	24 VDC
6 *	12 VDC
7 *	240 VAC, 50/60 Hz
9 *	Other

* Option

Option: VFR4□1□

Nil	None
Z	With light/surge voltage suppressor

Option: VFR4□4□

Nil	None
Z *	With light/surge voltage suppressor
S *	With surge voltage suppressor

* Indicator light (Z) is not available for grommet type. Surge voltage suppressor (S) is available only on grommet.

Electrical entry: VFR4□1□

E: Grommet terminal

D: DIN terminal

Electrical entry: VFR4□4□

G: Grommet

E: Grommet terminal

T: Conduit terminal

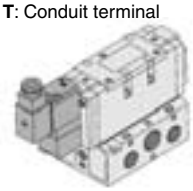

D, Y: DIN terminal

Pilot valve Manual override

Nil: Non-locking push type

A *: Non-locking push type A (Extended)

B *: Locking type B (Tool required)

C *: Locking type C (Lever)

* Option

How to Order Pilot Valve Assembly

SF4 – 1 F □ – 70 – □ – □

Coil rated voltage

Symbol	Rated voltage
1	100 VAC, 50/60 Hz
2	200 VAC, 50/60 Hz
3 *	110 to 120 VAC, 50/60 Hz
4 *	220 VAC, 50/60 Hz
5	24 VDC
6 *	12 VDC
7 *	240 VAC, 50/60 Hz
9 *	Other

* Option

Electrical entry, Light/Surge voltage suppressor

Symbol	Electrical entry	Indicator light	With surge voltage suppressor	Applicable valve model
F *	Plug-in	—	—	VFR4□0□ VFR4□1□
G	Grommet	—	—	VFR4□4□
GS		—	●	
E	Grommet terminal	—	—	
EZ		●	●	
T	Conduit terminal	—	—	
TZ		●	●	
D	DIN terminal	—	—	
DZ		●	●	
Y	DIN terminal (DIN43650B type)	—	—	
YZ		●	●	

Manual override

Nil	Non-locking push type
A *	Non-locking push type A (Extended)
B *	Locking type B (Tool required)
C *	Locking type C (Lever)

* Option

CE-compliant

Nil	—
Q	CE-compliant *

* Electrical entry: D, Y and F only

Symbol

Symbol	Applicable valve model
Nil	VFR4□0□ VFR4□1□
1	VFR4□4□

* VFR4□0□, VFR4□1□: Pilot valve assembly is all plug-in (F).

Use as a guide for selection.
Please confirm the actual conditions with SMC Sizing Program.

Cylinder Speed Chart

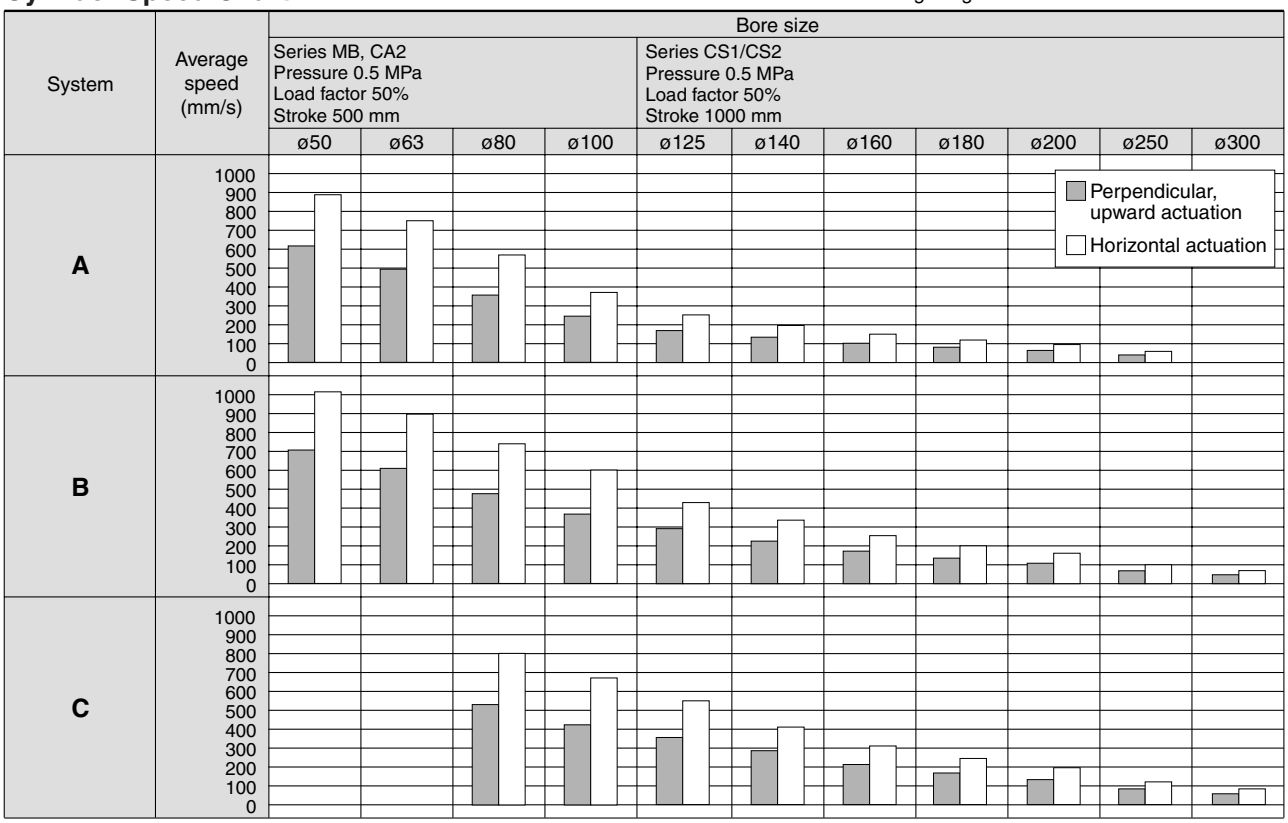

∗ It is when the cylinder is extending that is meter-out controlled by speed controller which is directly connected with cylinder, and its needle valve with being fully open.
∗ The average velocity of the cylinder is what the stroke is divided by the total stroke time.
∗ Load factor: ((Load weight x 9.8)/Theoretical force) x 100%

System Components

System	Solenoid valve	Speed controller	Silencer	SPG (Steel pipe) dia. x Length
A	Series VFR4000 Rc 3/8	AS4000-03 (S = 21mm²)	AN300-03 (S = 60mm²)	10A x 1 m
B	Series VFR4000 Rc 3/8	AS420-03 (S = 73mm²)	AN300-03 (S = 60mm²)	10A x 1 m
C	Series VFR4000 Rc 1/2	AS420-04 (S = 97mm²)	AN400-04 (S = 90mm²)	15A x 1 m

How to Order Sub-plate Assembly

Pilot type

Nil	Internal pilot
R	External pilot

<Side ported>

Plug-in VFR4000 − P − [ ] 04 [ ]
Non plug-in VFS4000 − S − [ ] 04 [ ]

<Bottom ported>

Plug-in VFR4000 − P − B 04 [ ]
Non plug-in VFS4000 − S − B 04 [ ]

Thread type

Nil	Rc
F	G
N	NPT
T	NPTF

Piping port (P, A, B port)

03	3/8
04	1/2

EA, EB port 3/8

Note) • Bottom ported is not available for external pilot.
• Mounting bolts and gaskets are not included.

Construction

2 position single

VFR41□0

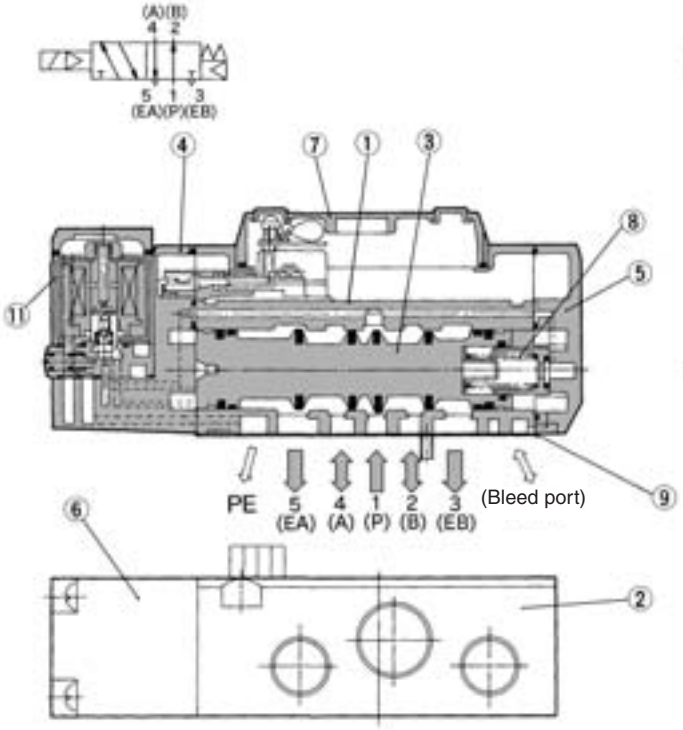

2 position double

VFR42□0

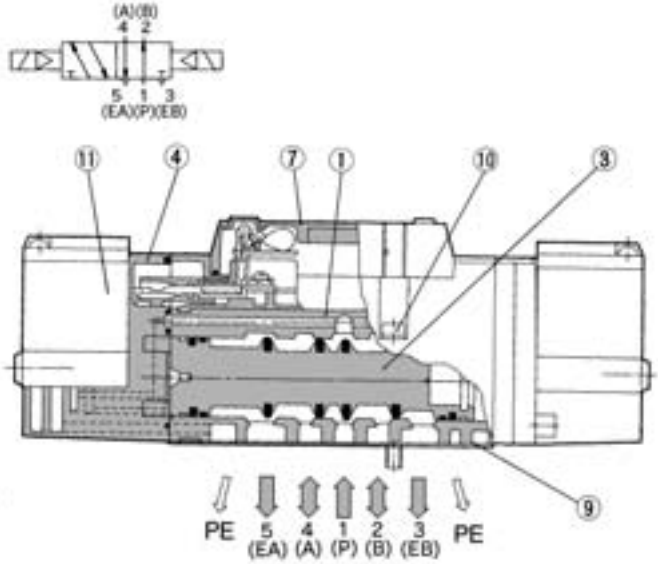

3 position closed center/exhaust center/pressure center

Closed center: VFR43□0

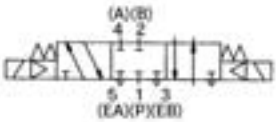

Exhaust center: VFR44□0

Pressure center: VFR45□0

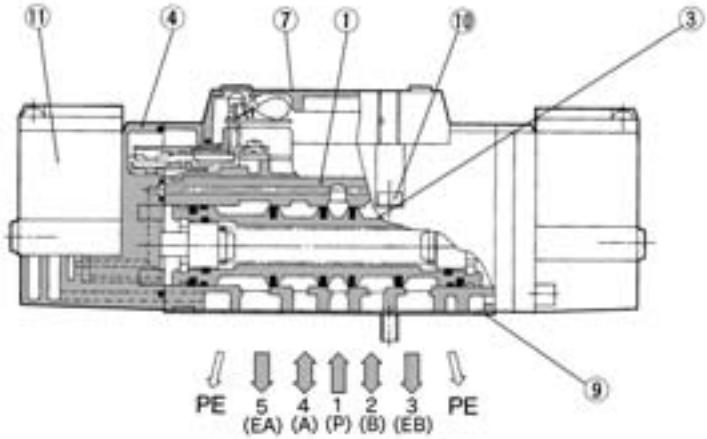

This figure shows a closed center type.

Component Parts

No.	Description	Material	Note
1	**Body**	Aluminum die-casted	Platinum silver
2	**Sub-plate**	Aluminum die-casted	Platinum silver
3	**Spool valve**	Aluminum, NBR	
4	**Adapter plate**	Resin	Black

Component Parts

No.	Description	Material	Note
5	**End plate**	Resin	Black
6	**Junction cover**	Resin	
7	**Light cover**	Resin	
8	**Spool spring**	Stainless steel	

Replacement Parts

No.	Description	Material	Part no.		
			VFR41□□	**VFR42□□**	**VFR43□□/44□□/45□□**
9	**Gasket**	NBR	VFR4000-32-3	VFR4000-32-3	VFR4000-32-3
10	**Hexagon socket head screw**	Steel	AXT335-1-11 (M4 x 40)	AXT335-1-11 (M4 x 40)	AXT335-1-11 (M4 x 40)
11	**Pilot valve assembly**	—	Refer to “How to Order Pilot Valve Assembly” on page 1275.		
—	**Sub-plate assembly**	—	Refer to “How to Order Sub-plate Assembly” on page 1276.		

Plug-in: 2 Position Single/Double, 3 Position Closed Center/Exhaust Center/Pressure Center

2 position single: VFR410$^{0}_{1}$-□F

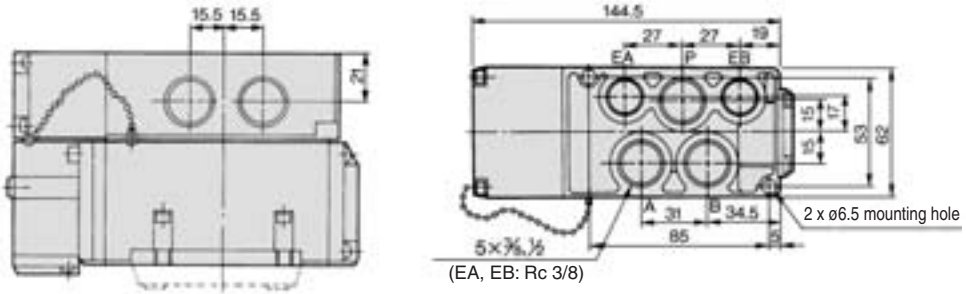

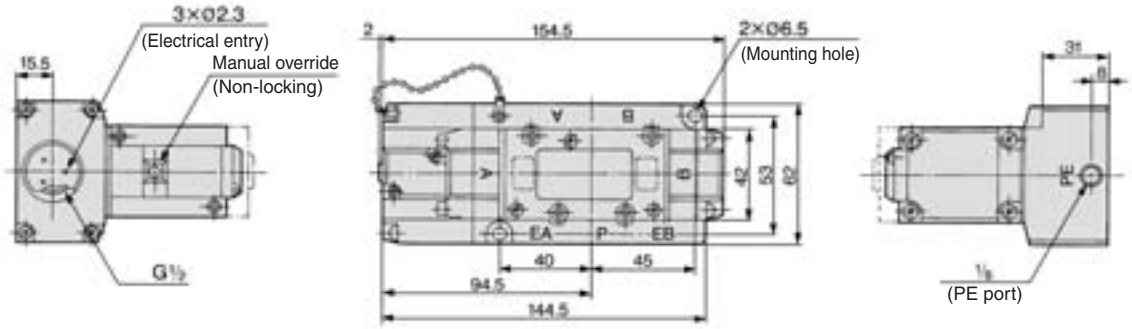

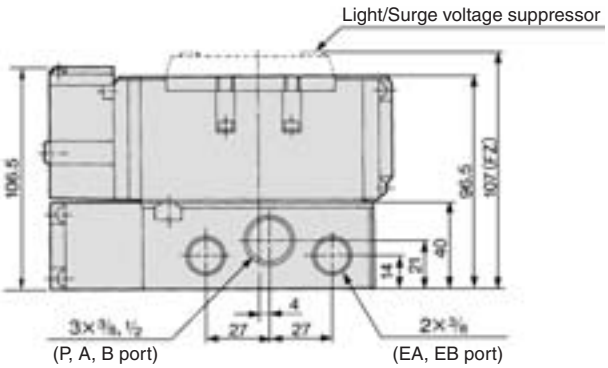

2 position double: VFR420$^{0}_{1}$-□F

3 position closed center: VFR430$^{0}_{1}$-□F
3 position exhaust center: VFR440$^{0}_{1}$-□F
3 position pressure center: VFR450$^{0}_{1}$-□F

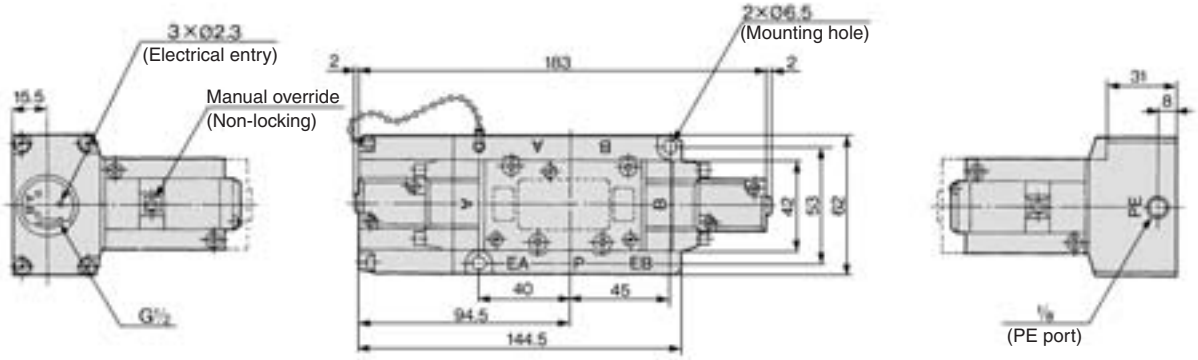

Non Plug-in: 2 Position Single/Double, 3 Position Closed Center/Exhaust Center/Pressure Center

2 position single: VFR411$^{0}_{1}$-□E, VFR411$^{0}_{1}$-□D

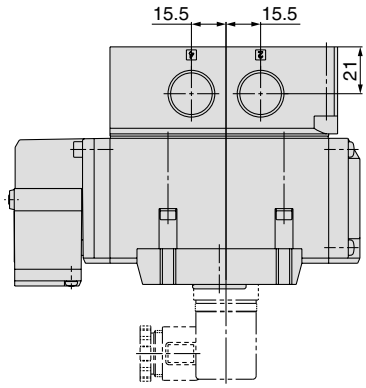

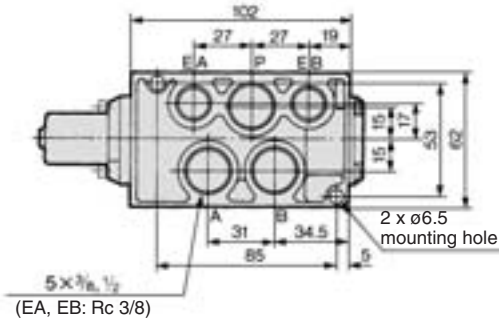

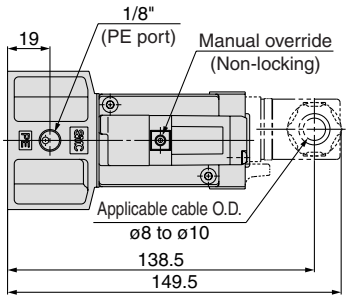

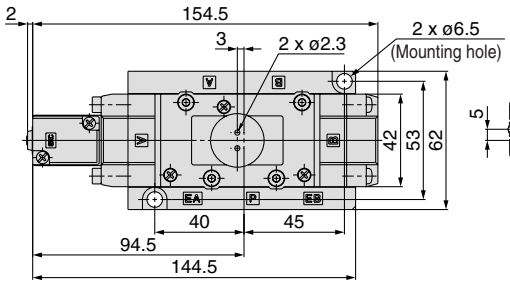

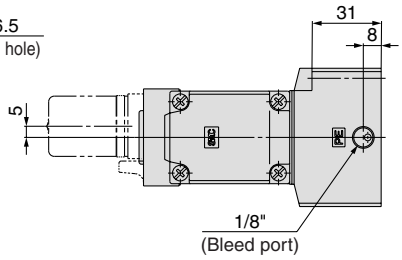

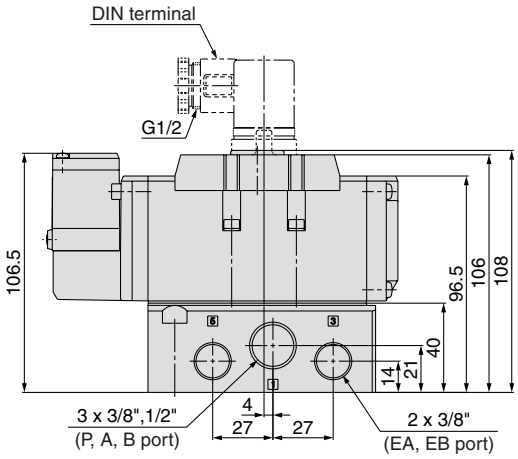

2 position double: VFR421$^{0}_{1}$-□E, VFR421$^{0}_{1}$-□D

3 position closed center: VFR431$^{0}_{1}$-□E, VFR431$^{0}_{1}$-□D
3 position exhaust center: VFR441$^{0}_{1}$-□E, VFR441$^{0}_{1}$-□D
3 position pressure center: VFR451$^{0}_{1}$-□E, VFR451$^{0}_{1}$-□D

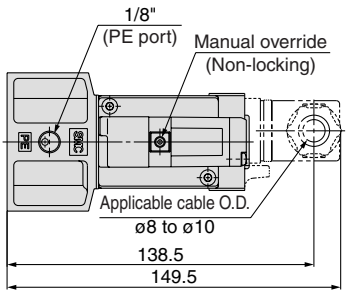

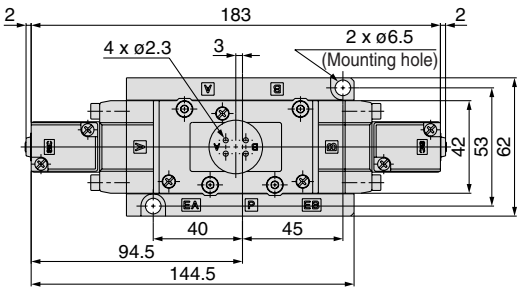

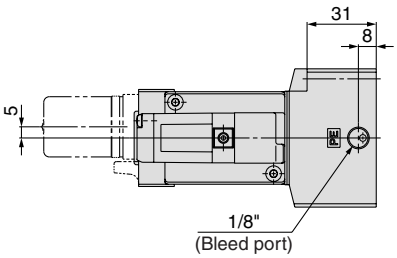

∗ Other dimensions are the same as the single type.

Non Plug-in: 2 Position Single

2 position single: VFR414$^{0}_{1}$-□G

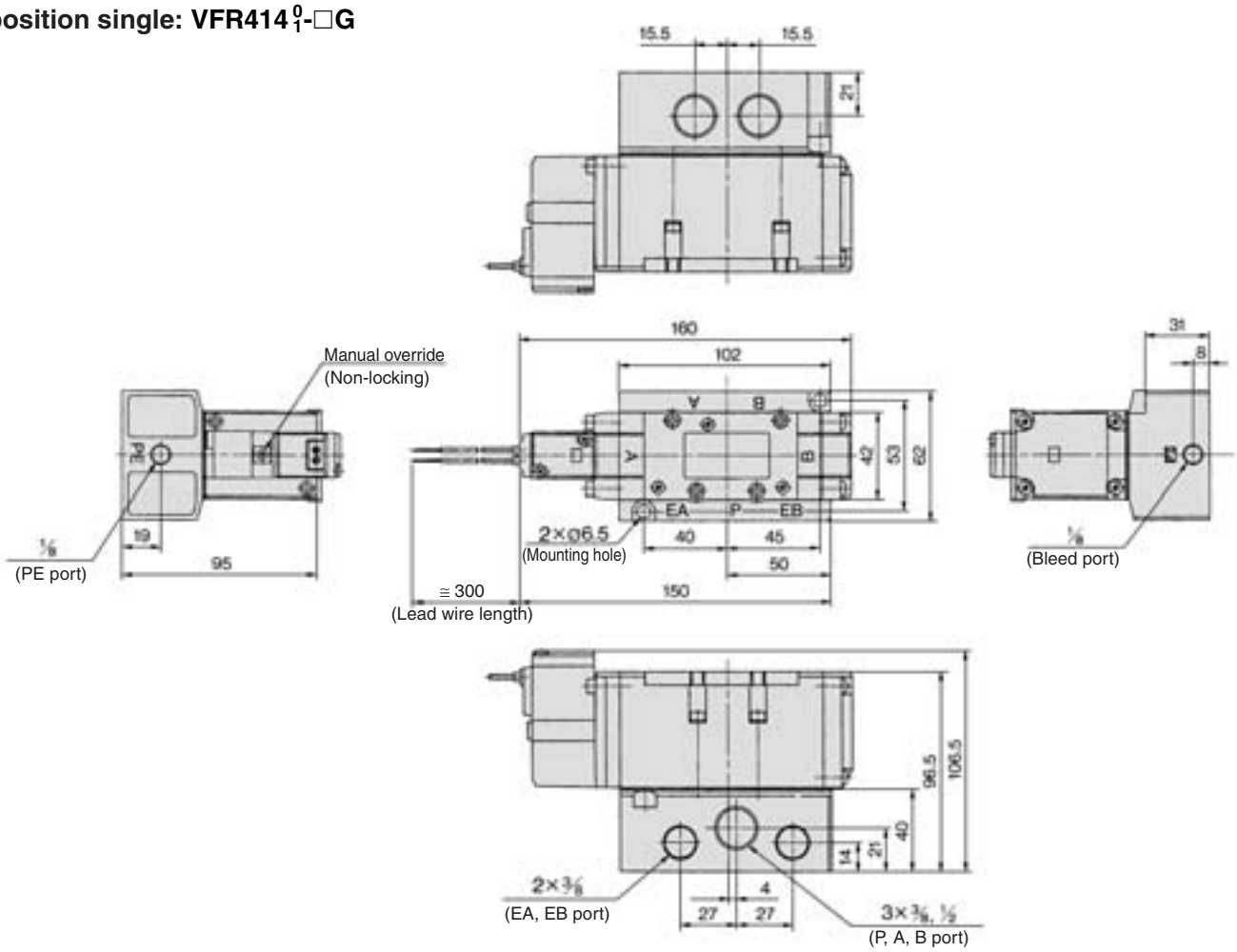

E: Grommet terminal

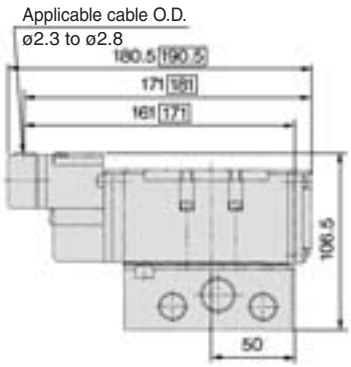

□: With light/surge voltage suppressor

T: Conduit terminal

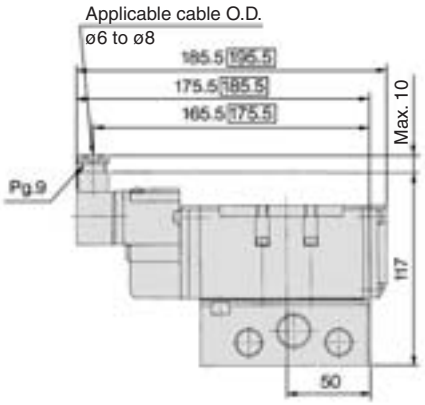

□: With light/surge voltage suppressor

D, Y: DIN terminal

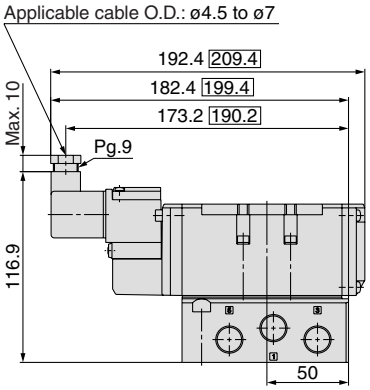

□: With light/surge voltage suppressor

Non Plug-in: 2 Position Double, 3 Position Closed Center/Exhaust Center/Pressure Center

2 position double: VFR424$^{0}_{1}$-□G

3 position closed center: VFR434$^{0}_{1}$-□G
3 position exhaust center: VFR444$^{0}_{1}$-□G
3 position pressure center: VFR454$^{0}_{1}$-□G

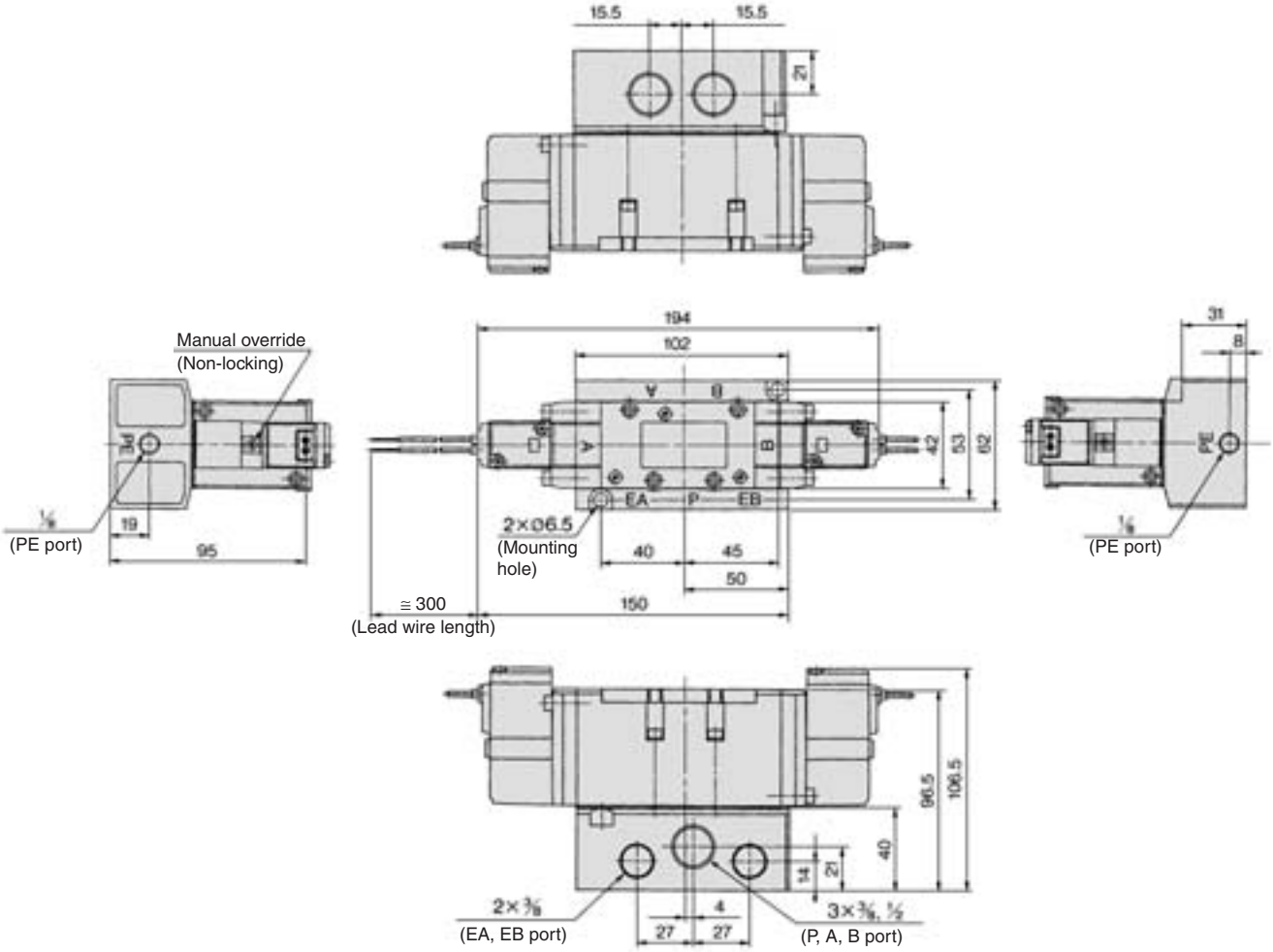

E: Grommet terminal

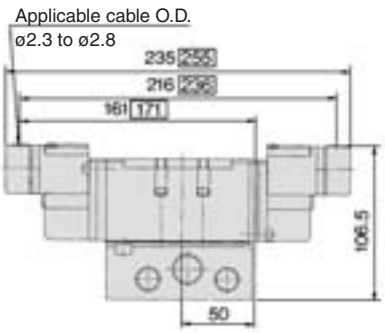

□: With light/surge voltage suppressor

T: Conduit terminal

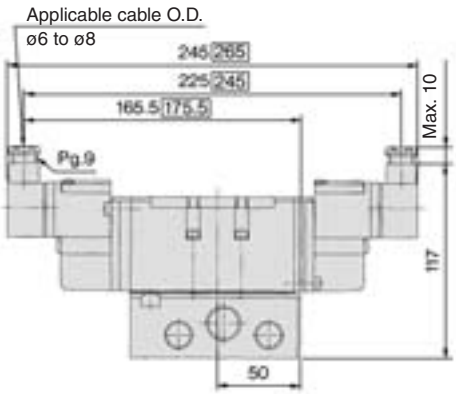

□: With light/surge voltage suppressor

D: DIN terminal

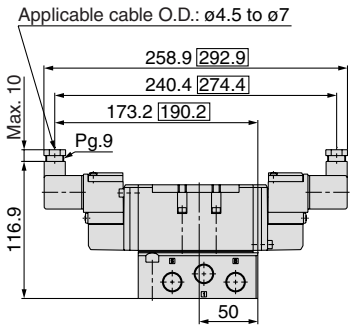

□: With light/surge voltage suppressor

Manifold Specifications

Manifold Specifications

Base model	Wiring	Porting specifications	Port size		Stations	Applicable valve model
		A, B port	P, EA, EB	A, B		
Plug-in type **VV5FR4-01□(-Q)**	• With terminal block	Side/Bottom	½	3/8, ½	2 to 10	VFR4□0□-□F(-Q)
	• With multi-connector • With D-sub connector				2 to 8	
Non plug-in type **VV5FR4-10(-Q)**	• Grommet terminal • DIN terminal				2 to 10	VFR4□1□-□E VFR4□1□-□D(-Q)
Non plug-in type **VV5FR4-40(-Q)**	• Grommet • Grommet terminal • Conduit terminal • DIN terminal					VFR4□4□-□G VFR4□4□-□E VFR4□4□-□T VFR4□4□-□D(-Q)

How to Order Manifold Assembly

<Example> Plug-in type with terminal block: 6 stations

VV5FR4-01T-061-03 ····· **1 set (Manifold base part no.)**
∗VFR4100-5FZ ····· **3 sets (2 position single part no.)**
∗VFR4200-5FZ ····· **2 sets (2 position double part no.)**
∗VVFS4000-10A ····· **1 set (Blanking plate assembly part no.)**
→ The asterisk denotes the symbol for assembly. Prefix it to the part nos. of the solenoid valve, etc.

Valve arrangement is counted from the D side.
When ordering, specify the part nos. in order from the 1st. station in the D side.
When entry of part numbers becomes complicated, indicate on the manifold specification sheet.

<Example> Non plug-in type: 6 stations

VV5FR4-10-061-03 ····· **1 set (Manifold base part no.)**
∗VFR4110-5D ····· **5 sets (2 position single part no.)**
∗VFR4410-5D ····· **1 set (3 position exhaust center part no.)**
∗VVFS4000-R-04-2 ····· **1 set (Individual EXH spacer part no.)**
→ The asterisk denotes the symbol for assembly. Prefix it to the part nos. of the solenoid valve, etc.

Valve arrangement is counted from the D side.
When ordering, specify the part nos. in order from the 1st. station in the D side.
When entry of part numbers becomes complicated, indicate on the manifold specification sheet.

Plug-in Type: With Terminal Block

- **Since lead wires of solenoid valve are connected with the terminals on upper surface of terminal block corresponding lead wires from power source can be wired at the bottom of terminal block.**

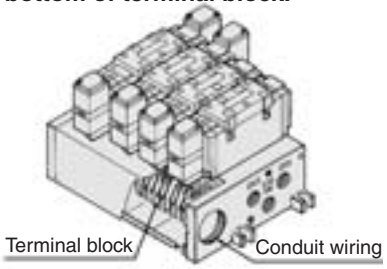

VV5FR4 – 01T – 06 1 – 03 □ – □

- **Series VFR4000 Manifold**
- **Plug-in type with terminal block**
- **Stations**

02	2 stations
⋮	⋮
10	10 stations

- **Symbol**

Symbol	Passage P	Passage EA, EB	Porting specifications (A, B)
1	Common	Common	Side
2			Bottom ∗

∗ Option

- **Thread type**

Nil	Rc
F	G
N	NPT
T	NPTF

- **Port size**

Symbol	P, EA, EB	A, B ∗
03	½	3/8
04		½
M		Mixed

∗ For bottom ported: Rc 3/8 only.

- **CE-compliant**

Nil	—
Q	CE-compliant

Plug-in Type: With Multi-connector (For wiring specifications, refer to page 1326.)

- **Master connection of power and solenoid valves.**
- **Quick wiring permits ease of installation.**

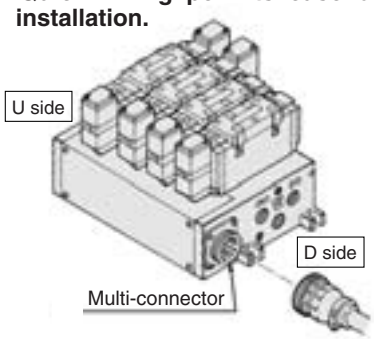

VV5FR4 – 01C D – 05 1 – 03 □ – □

- **Series VFR4000 Manifold**
- **Plug-in type with multi-connector**
- **Connector mounting direction**

D	D side mounting
U	U side mounting

- **Stations**

02	2 stations
⋮	⋮
08 ∗	8 stations

∗ Max: 8 stations

- **Symbol**

Symbol	Passage P	Passage EA, EB	Porting specifications (A, B)
1	Common	Common	Side
2			Bottom ∗

∗ Option

- **Thread type**

Nil	Rc
F	G
N	NPT
T	NPTF

- **Port size**

Symbol	P, EA, EB	A, B ∗
03	½	3/8
04		½
M		Mixed

∗ For bottom ported: Rc 3/8 only.

- **CE-compliant**

Nil	—
Q	CE-compliant

Plug-in Type: With D-sub Connector (For wiring specifications, refer to page 1326.)

- Wide range of interchangeability (D-sub connector (25P) conforming to MIL standard)
- Quick wiring permits easier installation.

VV5FR4 – 01F D – 06 1 – 03 ☐ – ☐

- **Series VFR4000 Manifold**
- **Plug-in type with D-sub connector**
- **Connector mounting direction**

D	D side mounting
U	U side mounting

- **Stations**

02	2 stations
⋮	⋮
08 *	8 stations

* Max: 8 stations

- **Symbol**

Symbol	Passage P	Passage EA, EB	Porting specifications (A, B)
1	Common	Common	Side
2			Bottom *

* Option

- **Port size**

Symbol	P, EA, EB	A, B *
03	½	3/8
04		½
M		Mixed

* For bottom ported: Rc 3/8 only.

- **Thread type**

Nil	Rc
F	G
N	NPT
T	NPTF

- **CE-compliant**

Nil	—
Q	CE-compliant

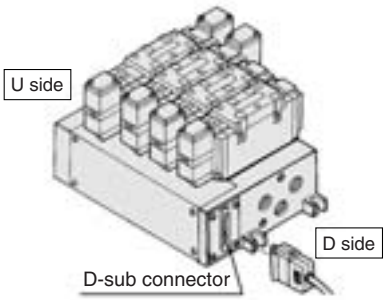

Non Plug-in Type: Grommet Terminal, DIN Terminal (Common electrical entry)

- Individual wiring for every valve

VV5FR4 – 10 – 05 1 – 03 ☐ – ☐

- **Series VFR4000 Manifold**
- **Non plug-in type Common electrical entry**
- **Stations**

02	2 stations
⋮	⋮
10	10 stations

- **Symbol**

Symbol	Passage P	Passage EA, EB	Porting specifications (A, B)
1	Common	Common	Side
2			Bottom *

* Option

- **Port size**

Symbol	P, EA, EB	A, B *
03	½	3/8
04		½
M		Mixed

* For bottom ported: Rc 3/8 only.

- **Thread type**

Nil	Rc
F	G
N	NPT
T	NPTF

- **CE-compliant**

Nil	—
Q	CE-compliant

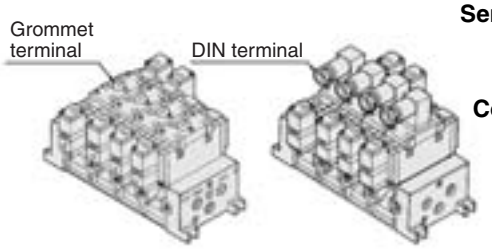

Non Plug-in Type: Grommet, Grommet Terminal, Conduit Terminal, DIN Terminal (Individual electrical entry)

- Individual wiring for every valve

VV5FR4 – 40 – 05 1 – 03 ☐ – ☐

- **Series VFR4000 Manifold**
- **Non plug-in type Individual electrical entry**
- **Stations**

02	2 stations
⋮	⋮
10	10 stations

- **Symbol**

Symbol	Passage P	Passage EA, EB	Porting specifications (A, B)
1	Common	Common	Side
2			Bottom *

* Option

- **Port size**

Symbol	P, EA, EB	A, B *
03	½	3/8
04		½
M		Mixed

* For bottom ported: Rc 3/8 only.

- **Thread type**

Nil	Rc
F	G
N	NPT
T	NPTF

- **CE-compliant**

Nil	—
Q	CE-compliant

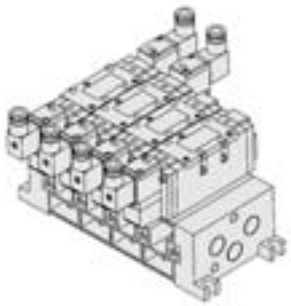

Note) Manifold base is in common with VV5FR4-10.

Note) Manifold base is in common with Series VFS4000 but the connection of terminal block for plug-in type is different.

Manifold/Option Parts Assembly

Individual SUP spacer
Setting individual SUP spacer on the manifold block enables individual SUP port for each valve.

Body type	Plug-in type	Non plug-in type
Part no.	VVFS4000-P-03-1	VVFS4000-P-03-2

Individual EXH spacer
Setting individual EXH spacer on the manifold block enables individual EXH port for each valve.

Body type	Plug-in type	Non plug-in type
Part no.	VVFS4000-R-04-1	VVFS4000-R-04-2

SUP block disk
When supplying manifold with more than two different pressures, high and low, insert a block disk in between stations subjected to plug-in different pressures.

Body type	Plug-in type	Non plug-in type
Part no.	AXT634-10A	

EXH block disk
When valve exhaust affects the other stations on the circuit, insert EXH block disk in between stations to separate valve exhaust.

Body type	Plug-in type	Non plug-in type
Part no.	AXT634-11A	

EXH block disk

SUP block disk

Throttle valve spacer
Needle valve set on the manifold block can control cylinder speed by throttling exhaust.

Body type	Plug-in type	Non plug-in type
Part no.	VVFS4000-20A-1	VVFS4000-20A-2

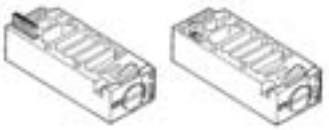

Interface regulator
Interface regulator set on the manifold block can regulate pressure for each valve. (Refer to "Flow Characteristics" on page 1324 before operation.)

Body type	Plug-in type	Non plug-in type
P port regulation	ARBF4050-00-P-1	ARBF4050-00-P-2
A port regulation	ARBF4050-00-A-1	ARBF4050-00-A-2
B port regulation	ARBF4050-00-B-1	ARBF4050-00-B-2

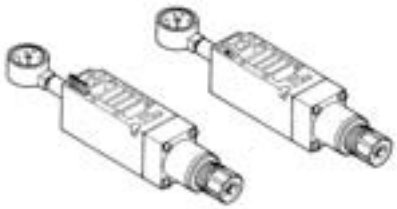

Blanking plate
It is used by attaching on the manifold block for being prepared for removing a valve for maintenance reasons or planning to mount a spare valve, etc.

Body type	Plug-in type	Non plug-in type
Part no.	VVFS4000-10A	

Manifold Option

With exhaust cleaner
- Valve exhaust noise dampening: 35 dB or more.
- Collects oil mist: collecting rate 99.9% or more
- Piping process reduced.

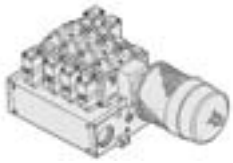

For details, refer to page 1289.

With control unit
Plug-in type/Non Plug-in type
- Filter, regulation valve, pressure switch and air release valve are all combined to form one unit.
- Piping processes are eliminated.

For details, refer to page 1292.

Manifold/Plug-in Type

With terminal block: VV5FR4-01T-Station 1-Port size

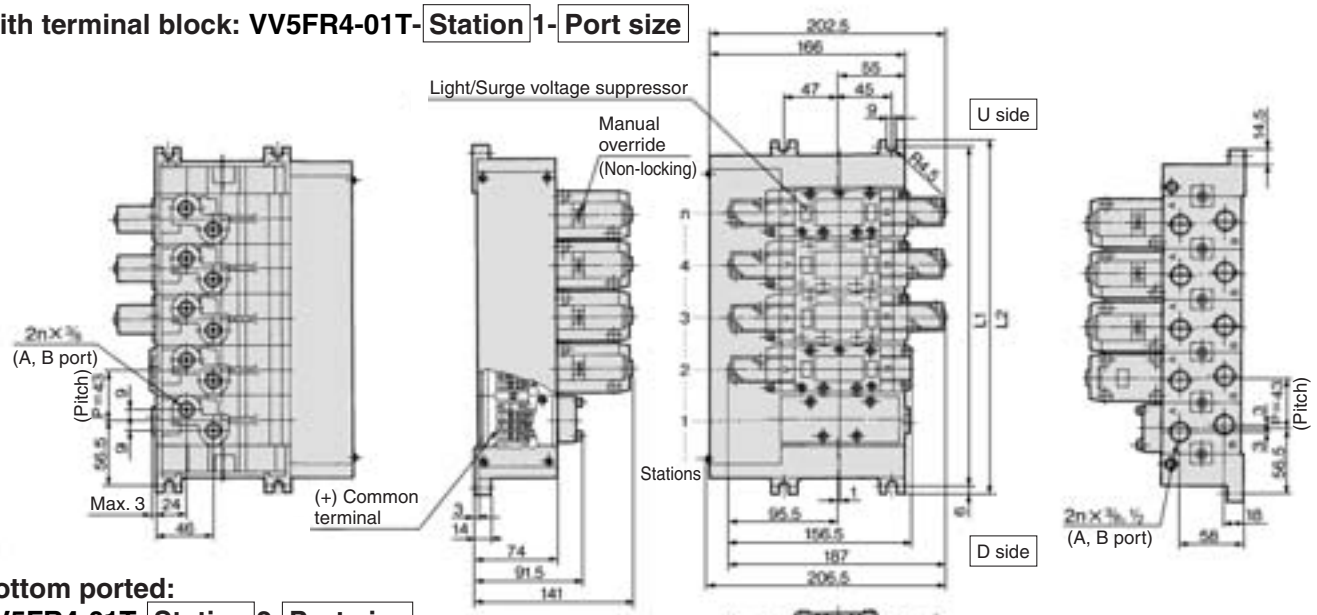

Bottom ported: VV5FR4-01T-Station 2-Port size

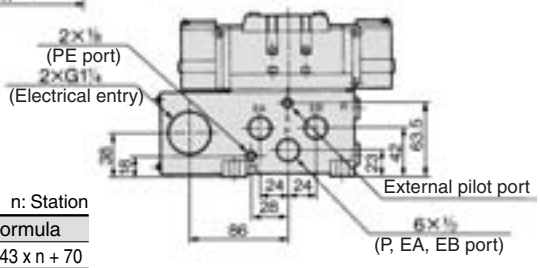

n: Station

L \ Stations	2	3	4	5	6	7	8	9	10	Formula
L_1	156	199	242	285	328	371	414	457	500	$L_1 = 43 \times n + 70$
L_2	168	211	254	297	340	383	426	469	512	$L_2 = 43 \times n + 82$

With multi-connector: VV5FR4-01CD-Station 1-Port size, VV5FR4-01CU-Station 1-Port size

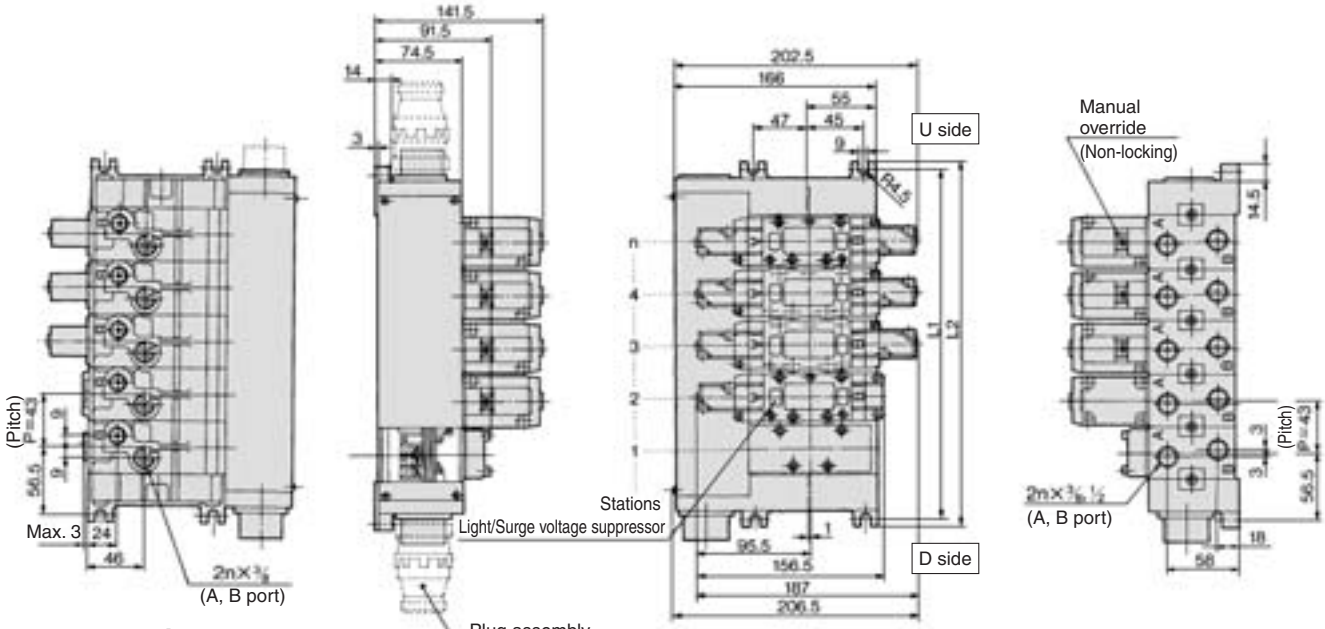

Bottom ported: VV5FR4-01CD/CU-Station 2-Port size

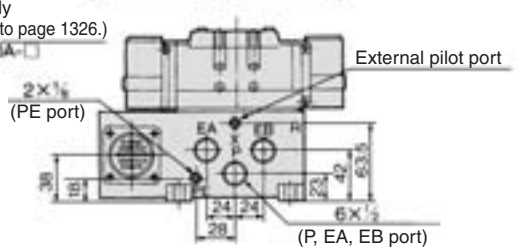

For wiring specifications, refer to page 1326.

n: Station

L \ Stations	2	3	4	5	6	7	8	Formula
L_1	156	199	242	285	328	371	414	$L_1 = 43 \times n + 70$
L_2	168	211	254	297	340	383	426	$L_2 = 43 \times n + 82$

Manifold/Plug-in Type

With D-sub connector: VV5FR4-01FD-Station 1-Port size, VV5FR4-01FU-Station 1-Port size

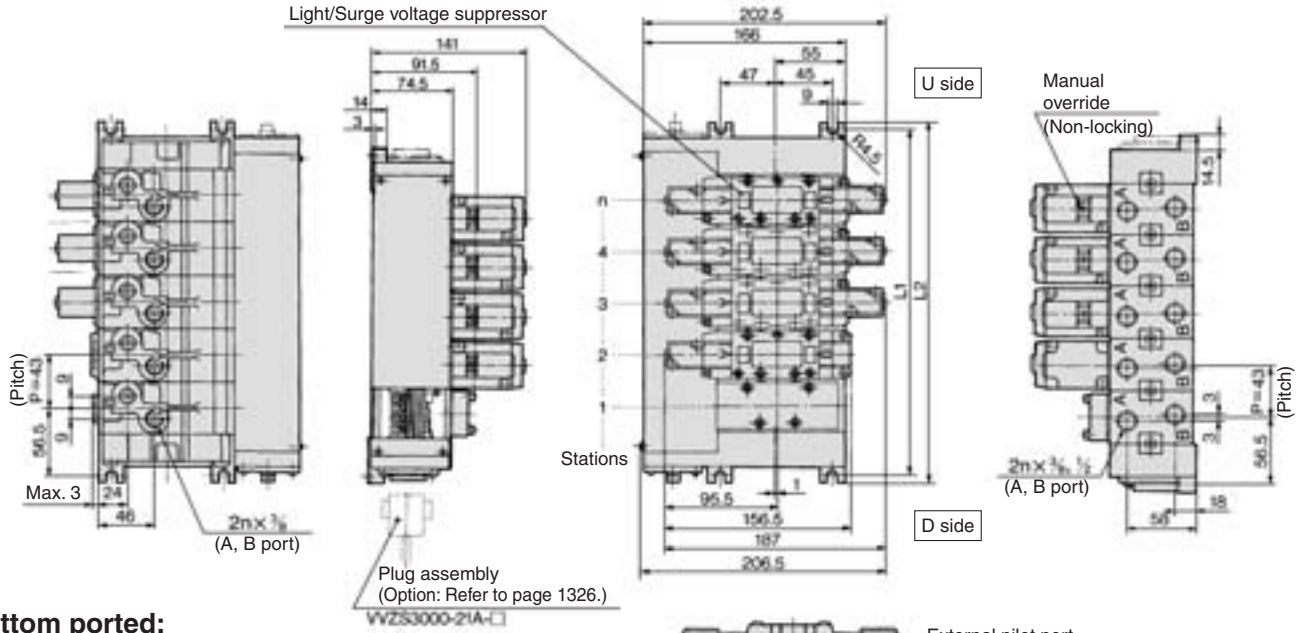

Bottom ported:
VV5FR4-01CD/CU-Station 2-Port size

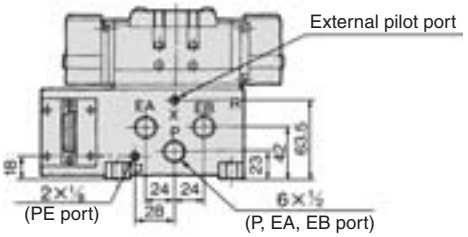

For wiring specifications, refer to page 1326.

n: Station

L \ Stations	2	3	4	5	6	7	8	Formula
L_1	156	199	242	285	328	371	414	$L_1 = 43 \times n + 70$
L_2	168	211	254	297	340	383	426	$L_2 = 43 \times n + 82$

Manifold/Non Plug-in Type

VV5FR4-10-Station 1-Port size

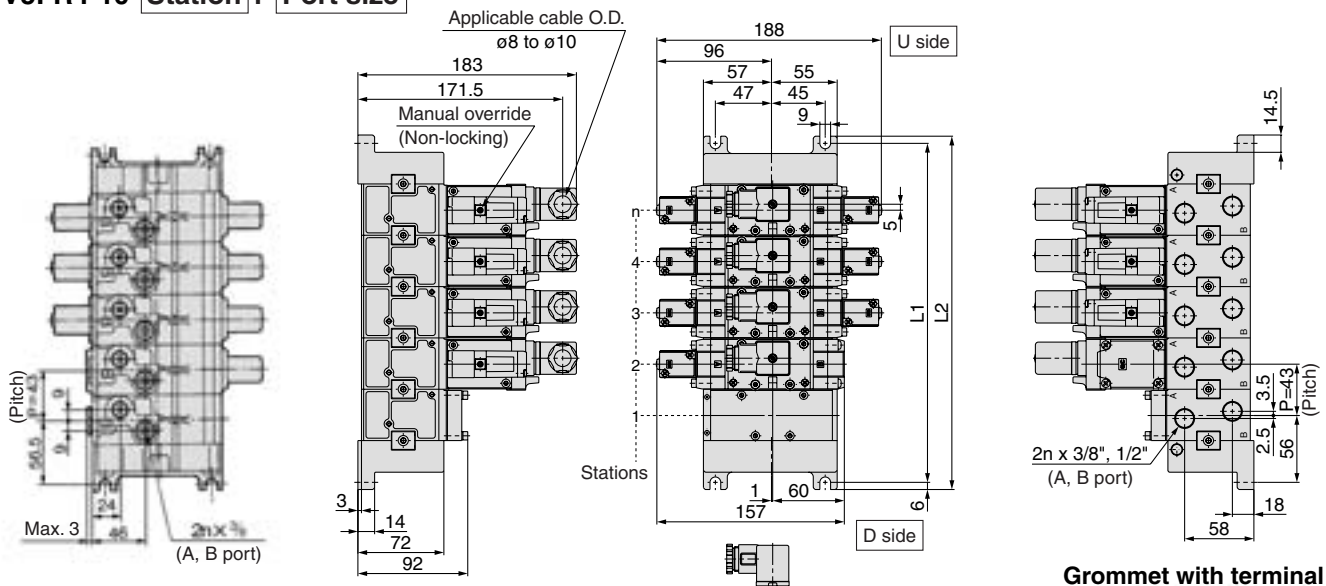

Bottom ported:
VV5FR4-10-Station 2-Port size

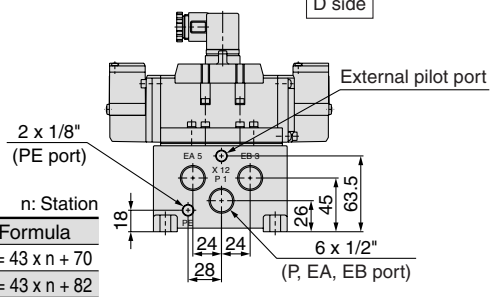

Grommet with terminal

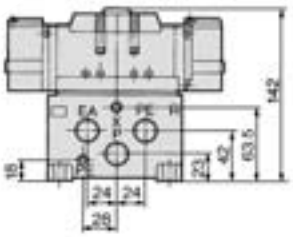

n: Station

L \ Stations	2	3	4	5	6	7	8	9	10	Formula
L_1	156	199	242	285	328	371	414	457	500	$L_1 = 43 \times n + 70$
L_2	168	211	254	297	340	383	426	469	512	$L_2 = 43 \times n + 82$

Manifold/Non Plug-in Type

VV5FR4-40-Station 1-Port size

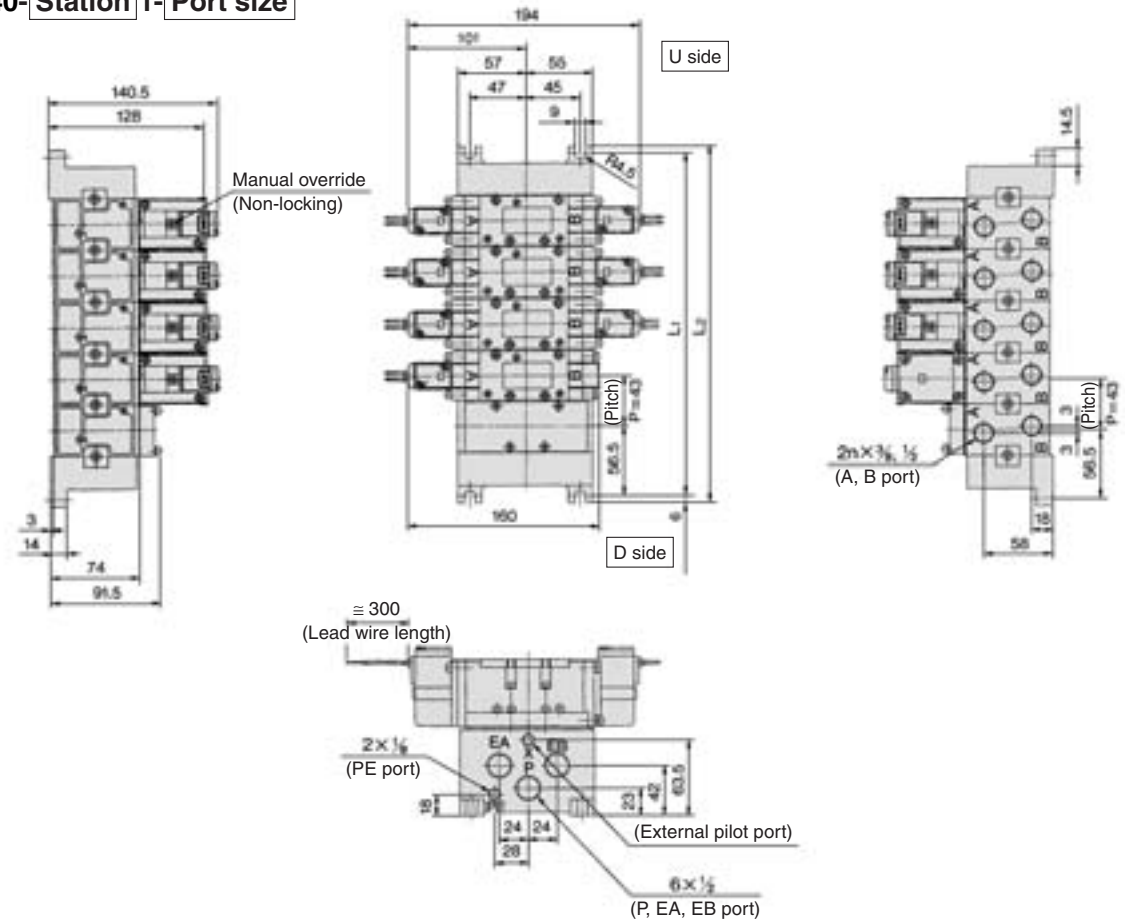

n: Stations

L \ Stations	2	3	4	5	6	7	8	9	10	Formula
L_1	156	199	242	285	328	371	414	457	500	$L_1 = 43 \times n + 70$
L_2	168	211	254	297	340	383	426	469	512	$L_2 = 43 \times n + 82$

E: Grommet terminal

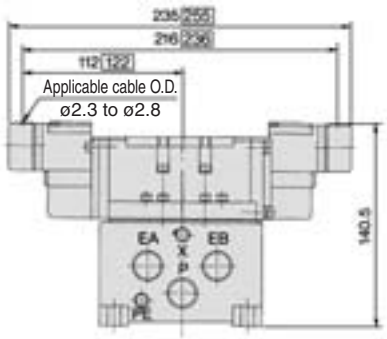

□: With light/surge voltage suppressor

T: Conduit terminal

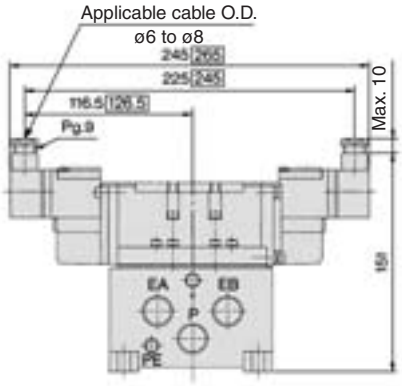

□: With light/surge voltage suppressor

D, Y: DIN terminal

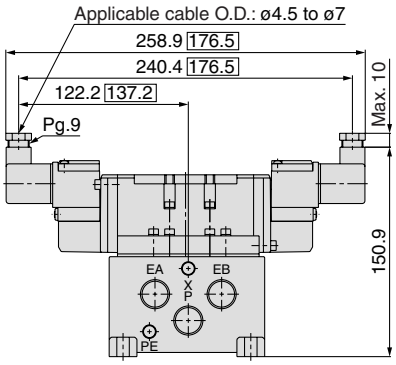

□: With light/surge voltage suppressor

Manifold/Option Parts Assembly: Plug-in Type/Non Plug-in Type

Individual SUP spacer:
VVFS4000-P-03-1 (Plug-in type)
VVFS4000-P-03-2 (Non plug-in type)

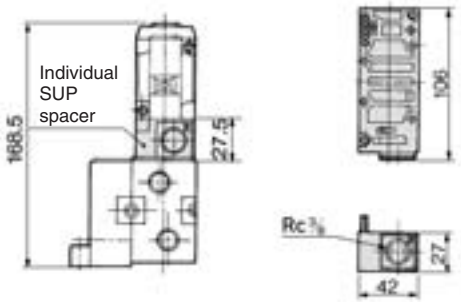

Individual EXH spacer:
VVFS4000-R-04-1 (Plug-in type)
VVFS4000-R-04-2 (Non plug-in type)

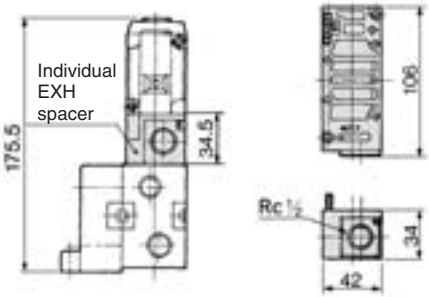

SUP block disk: AXT634-10A
EXH block disk: AXT634-11A

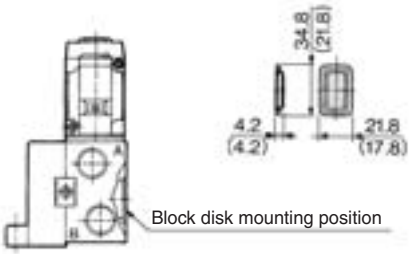

Note) Used with exclusive manifold block

( ): EXH block disk

Throttle valve spacer:
VVFS4000-20A-1 (Plug-in type)
VVFS4000-20A-2 (Non plug-in type)

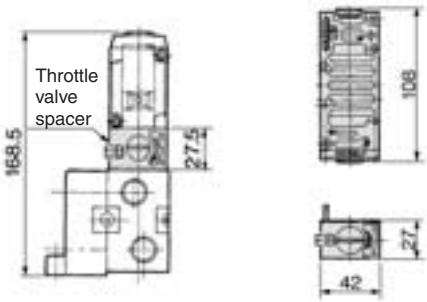

Interface regulator/P port regulation:
ARBF4050-00-P-1 (Plug-in type)
ARBF4050-00-P-2 (Non plug-in type)

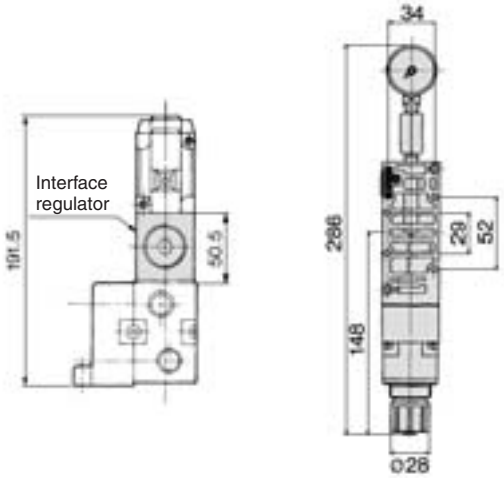

Interface regulator/A port regulation:
ARBF4050-00-A-1 (Plug-in type)
ARBF4050-00-A-2 (Non plug-in type)

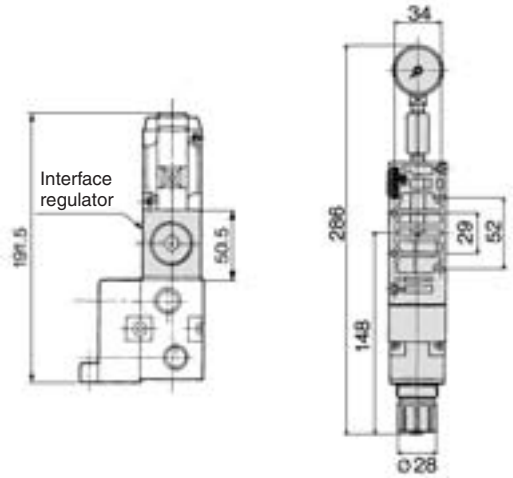

Interface regulator/B port regulation:
ARBF4050-00-B-1 (Plug-in type)
ARBF4050-00-B-2 (Non plug-in type)

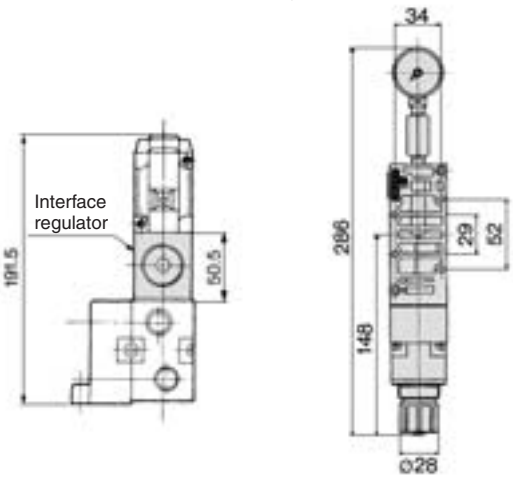

Dimensions: FZ type dimensions of direct manual style are also the same.

Manifold with Exhaust Cleaner

- **Serves to protect working environment.**
- **Valve exhaust noise dampening: 35 dB or more.**
- **Collection rate of drainage and oil mist: 99.9% or more.**
- **Piping work is reduced.**

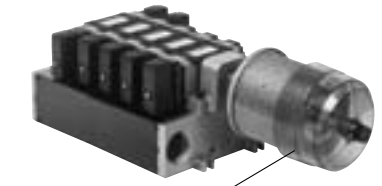

Plug-in type

Exhaust cleaner (Option)

U side

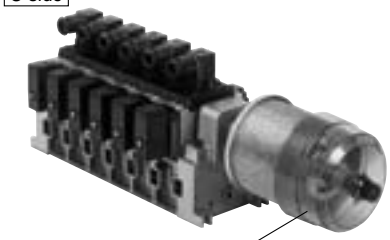

D side

Non plug-in type

Exhaust cleaner (Option)

Manifold Specifications

Manifold	Plug-in type: **VV5FR4-01□(-Q)**	Non plug-in type: **VV5FR4-10(-Q)**	Non plug-in type: **VV5FR4-40(-Q)**
Wiring	With terminal block With multi-connector With D-sub connector	DIN terminal Grommet terminal	Grommet, Grommet terminal, Conduit terminal, DIN terminal
Applicable valve model	VFR4□0□-□F(-Q)	VFR4□1□-□D(-Q) VFR4□1□-□E	VFR4□4□-□G, VFR4□4□-□E VFR4□4□-□T, VFR4□4□-□D(-Q)
Porting specifications	Common SUP, Common EXH		
	A, B port	Side: $^3/_8$, $^1/_2$ Bottom: $^3/_8$ (Option)	
	P port	Side: $^1/_2$ EXH 1 $1^1/_2$	
Stations	2 to 10 stations (With multi-connector/D-sub connector: 2 to 8 stations)		
Applicable exhaust cleaners	AMC610-10 (Port size: R 1), AMC810-14 (Port size: R $1^1/_2$) (1)		

Note 1) Use "AMC810-14" when used with 5 or more stations or in high frequency.
Exhaust cleaner "AMC610-10" and "AMC810-14" are not attached.

How to Order

VV5FR4 – 10 □ – 06 1 – 03 □ – CD – □

Series VFR4000 Manifold

Base type/Electrical entry

01T	Plug-in type with terminal block
01C	Plug-in type with multi-connector
01F	Plug-in type with D-sub connector
10	Non plug-in type Common electrical entry
40	Non plug-in type Individual electrical entry

Connector mounting direction

Symbol	With connector	Applicable base
Nil	None	01T, 10, 40
D	D side mounting	01C, 01F
U	U side mounting	

Stations

02	2 stations
⋮	⋮
10 Note)	10 stations

Note) • Base 01T/10/40: 2 to 10 stations
• Base 01C/01F: 2 to 8 stations

Symbol

Symbol	Passage P	Passage EA, EB	Porting specifications (A, B)
1	Common	Common	Side
2			Bottom *

* Option

Port size

Symbol	P, EA, EB	A, B *
03	$^1/_2$	$^3/_8$
04		$^1/_2$
M		Mixed

* For bottom ported: Rc 3/8 only.

Thread type

Nil	Rc
F	G
N	NPT
T	NPTF

Exhaust cleaner mounting direction

Symbol	Exhaust cleaner mounting direction	
CD	D side	D side mounting
CU	U side	U side mounting

* Please indicate size or port size of exhaust cleaner.

CE-compliant

Nil	—
Q	CE-compliant

How to Order Manifold Assembly

<Example> Plug-in type with terminal block (6 stations)

VV5FR4-01T-061-03-CD ····· **1 set (Manifold base part no.)**
***VFR4100-5FZ** ····· **3 sets (2 position single part no.)**
***VFR4200-5FZ** ····· **2 sets (2 position double part no.)**
***VVFS4000-10A** ····· **1 set (Blanking plate assembly part no.)**
***AMC610-10** ····· **1 set (Exhaust cleaner part no.)**
→ The asterisk denotes the symbol for assembly. Prefix it to the part nos. of the solenoid valve, etc.

Valve arrangement is counted from the D side.
When ordering, specify the part nos. in order from the 1st. station in the D side.
When entry of part numbers becomes complicated, indicate on the manifold specification sheet.

<Example> Non plug-in type: 6 stations

VV5FR4-10-061-03-CU ····· **1 set (Manifold base part no.)**
***VFR4110-5E** ····· **3 sets (2 position single part no.)**
***VFR4210-5E** ····· **2 sets (2 position double part no.)**
***VVFS4000-10A** ····· **1 set (Blanking plate assembly part no.)**
***AMC810-14** ····· **1 set (Exhaust cleaner part no.)**
→ The asterisk denotes the symbol for assembly. Prefix it to the part nos. of the solenoid valve, etc.

Valve arrangement is counted from the D side.
When ordering, specify the part nos. in order from the 1st. station in the D side.
When entry of part numbers becomes complicated, indicate on the manifold specification sheet.

⚠ Caution

When using an exhaust cleaner, mount it downwards.

Refer to Best Pneumatics No. 6 for Exhaust Cleaner details.

Manifold with Exhaust Cleaner: Plug-in Type/Non Plug-in Type

Plug-in type: VV5FR4-01T-Station 1-Port size-CD/CU

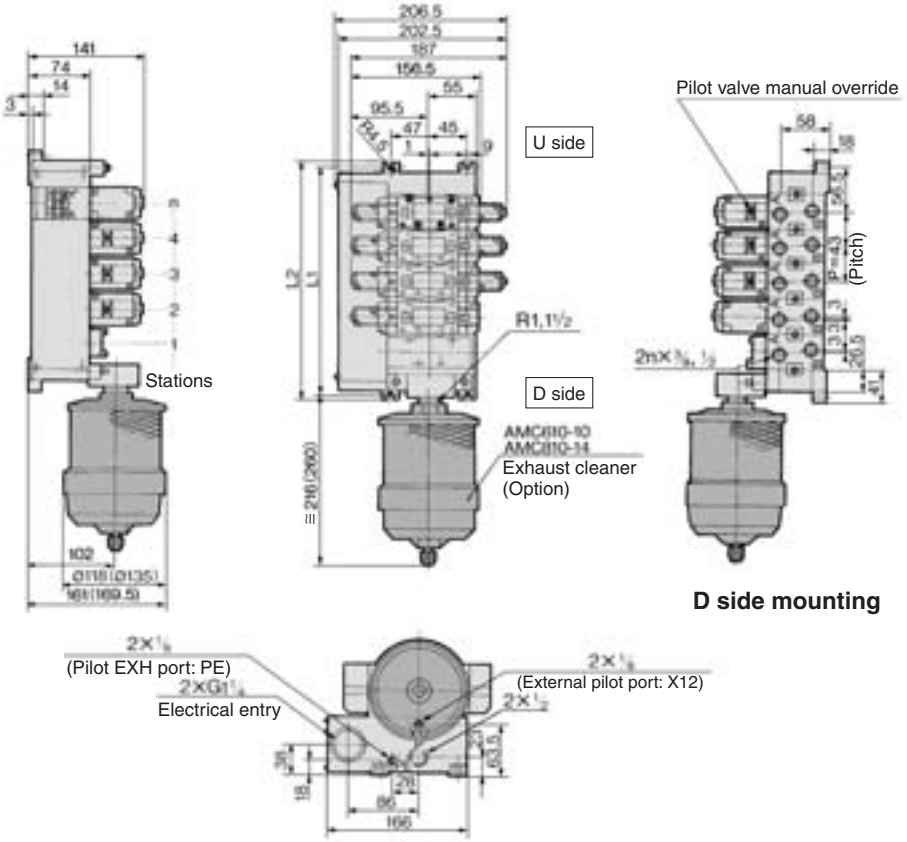

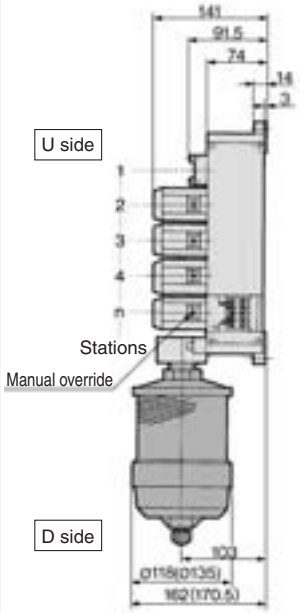

U side mounting

( ): AMC810

Non plug-in type: VV5FR4-10-Station 1-Port size-CD/CU

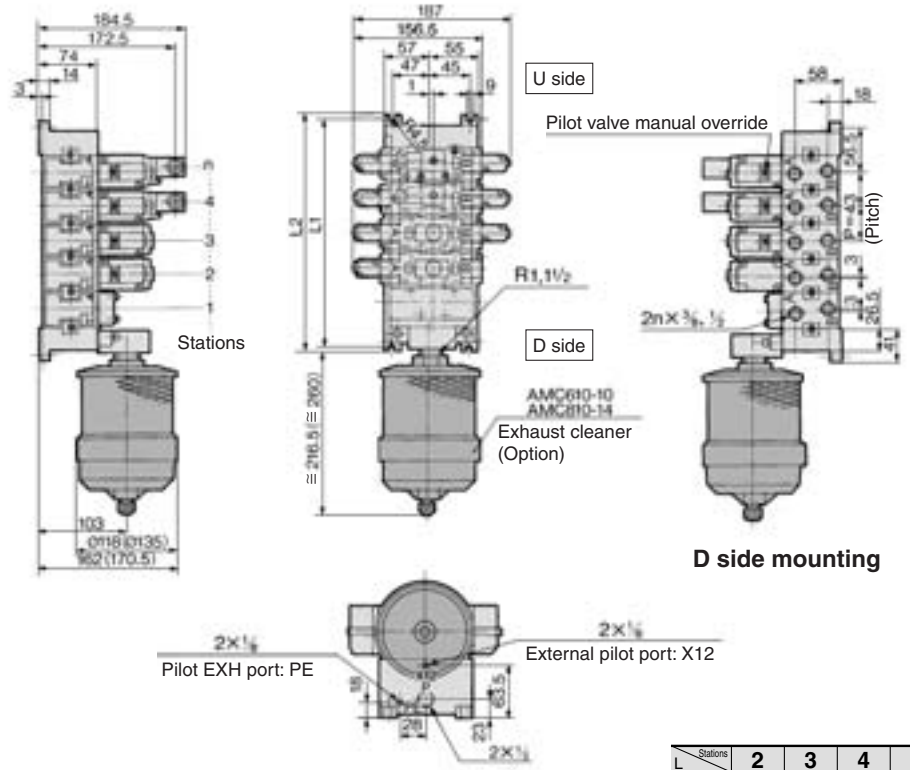

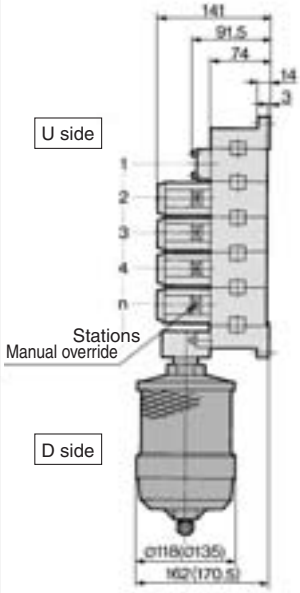

U side mounting

n: Station

L \ Stations	2	3	4	5	6	7	8	9	10	Formula
L_1	156	199	242	285	328	371	414	457	500	$L_1 = 43 \times n + 70$
L_2	168	211	254	297	340	383	426	469	512	$L_2 = 43 \times n + 82$

( ): AMC810

Manifold with Exhaust Cleaner: Non Plug-in Type

Non plug-in type: VV5FR4-40-Station 1-Port size-CD/CU

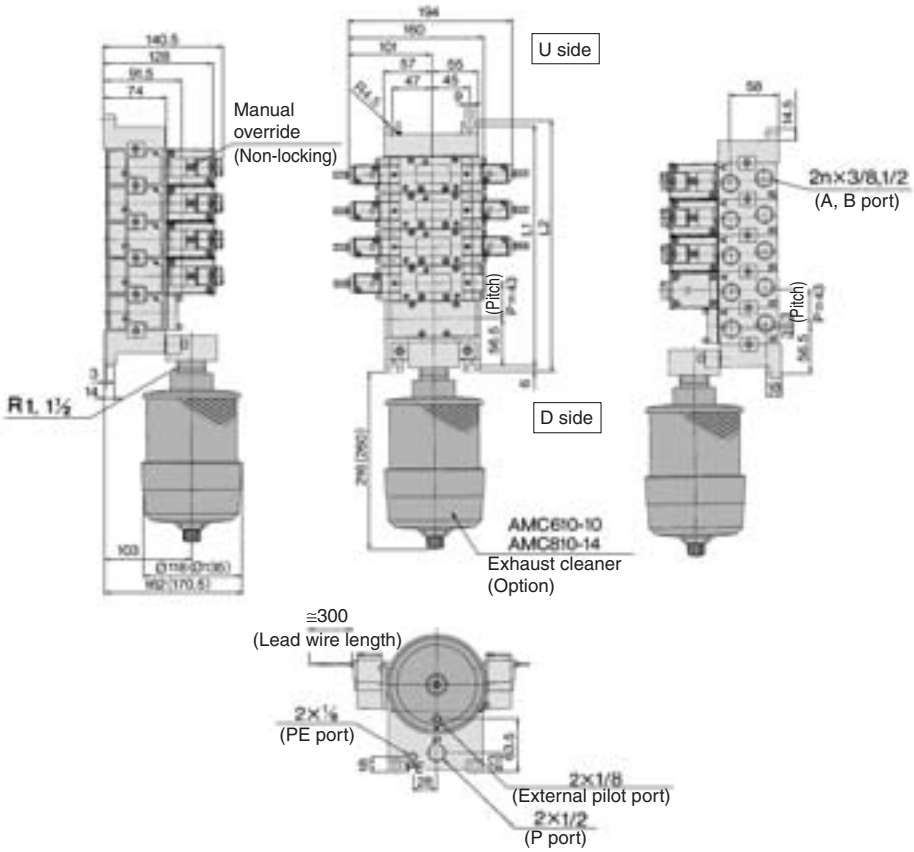

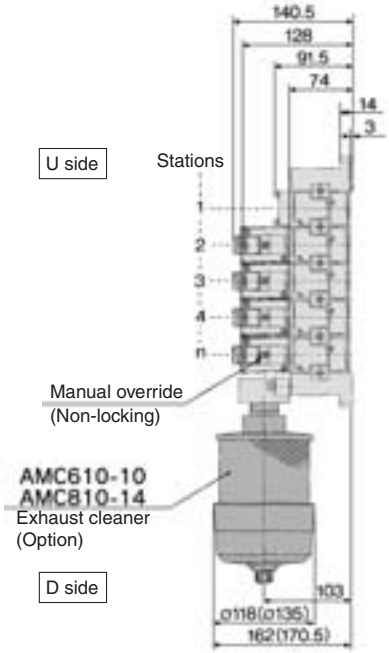

U side mounting

( ): AMC810

n: Station

L \ Stations	2	3	4	5	6	7	8	9	10	Formula
L_1	156	199	242	285	328	371	414	457	500	$L_1 = 43 \times n + 70$
L_2	168	211	254	297	340	383	426	469	512	$L_2 = 43 \times n + 82$

Manifold with Control Unit

- **Control unit (Filter, Regulator, Pressure switch, Air release valve) are all standardized to the one unit, and can be mounted on the manifold base without any attachments.**
- **Piping processes are eliminated.**

Plug-in type

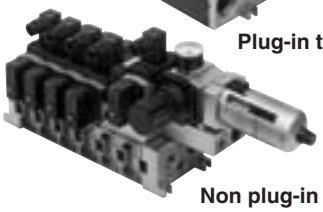

Non plug-in type

⚠ Caution

Air filter with auto-drain or manual drain must be mounted with the air filter at the bottom.

Manifold Specifications

Manifold	Plug-in type: **VV5FR4-01□(-Q)**	Non plug-in type: **VV5FR4-10(-Q)**	Non plug-in type: **VV5FR4-40(-Q)**
Wiring	With terminal block With multi-connector With D-sub connector	DIN terminal Grommet terminal	Grommet, Grommet terminal, Conduit terminal, DIN terminal
Applicable valve model	VFR4□0□-□F(-Q)	VFR4□1□-□D(-Q) VFR4□1□-□E	VFR4□4□-□G, VFR4□4□-□E VFR4□4□-□T, VFR4□4□-□D(-Q)
Porting specifications	Common SUP, Common EXH		
	A, B port	Side: $^3/_8$, $^1/_2$, Bottom: $^3/_8$	
	P, EA, EB port	Side: $^1/_2$	
Stations	2 to 10 (With multi-connector/D-sub connector: 2 to 8) *		

* Including station of control unit

Control Unit Specifications

Air filter (With auto-drain/With manual drain)	
Filtration degree	5 μm
Regulator	
Set pressure (Outlet pressure)	0.05 to 0.85 MPa
Pressure switch	
Set pressure range: OFF	0.1 to 0.6 MPa
Differential	0.08 MPa
Contact	1a
Indicator light	LED (RED)
Max. switch capacity	2 VA AC, 2 W DC
Max. operating current	24 VAC, DC or less: 50 mA 48 VAC, DC: 40 mA 100 VAC, DC: 20 mA
Inside voltage drop	4 V or less
Air release valve (Single only)	
Operating pressure range	0.2 to 0.9 MPa

Control Unit/Option

Air release valve spacer (1)	<Plug-in type> VVFS4000-24A-1R (D side mounting)	
	<Non plug-in type> VVFS4000-24A-2R (D side mounting)	
Pressure switch (2)	IS1000P-2-1	
Blanking plate	For filter regulator	MP2-3
	For pressure switch	MP3-2
	For air release valve	VVFS4000-24A-10
Filter element	11104-5B	

Note 1) Combining valve "VFR41□□" (single) and release valve spacer makes it possible to use this as an air release valve.
Note 2) Pressure switch cannot be mounted later on non plug-in type.

How to Order

VV5FR4 – 01C D – 08 1 – 03 □ – AP □ – □

Series VFR4000 Manifold

Base type/Electrical entry

01T	Plug-in type with terminal block
01C	Plug-in type with multi-connector
01F	Plug-in type with D-sub connector
10	Non plug-in type (Common entry)
40	Non plug-in type (Individual entry)

Connector mounting direction

Symbol	With connector	Applicable base
Nil	None	01T, 10, 40
D	D side mounting	01C, 01F
U	U side mounting	

Stations

02	2 stations
⋮	⋮
10 Note)	10 stations

Note) • Base 01T/10/40: 2 to 10 stations
• Base 01C/01F: 2 to 8 stations
• Including stations of control unit.

Symbol

Symbol	Passage P	Passage EA, EB	Porting specifications (A, B)
1	Common	Common	Side
2			Bottom *

* Option

Port size

Symbol	P, EA, EB	A, B *
03	½	3/8
04		½
M		Mixed

* For bottom ported: only 3/8

Thread type

Nil	Rc
F	G
N	NPT
T	NPTF

Control unit type

Control equipment \ Symbol	Nil	MP	AP	M	A	G	F	C	E
Air release valve		●	●	●	●			●	●
Air filter regulator with manual drain		●		●		●			
Air filter regulator with auto-drain			●		●		●		
Pressure switch		●	●						
Blanking plate (Air release valve)						●	●		
Blanking plate (Filter regulator)								●	
Blanking plate (Pressure switch)				●	●	●	●	●	
Required stations		2 stations							1 station

Note) Control unit is D side mounting only.

CE-compliant

Nil	—
Q	CE-compliant

Air release valve coil rating

Nil	None
1	100 VAC, 50/60 Hz
5	24 VDC
9	Other

How to Order Manifold Assembly

<Example> Plug-in type with terminal block

VV5FR4-01T-081-03-AP5	**1 set (Manifold base part no.)**
***VFR4100-5FZ**	**5 sets (2 position single part no.)**
***VFR4200-5FZ**	**2 sets (2 position double part no.)**

→ The asterisk denotes the symbol for assembly. Prefix it to the part nos. of the solenoid valve, etc.

The 1st and 2nd station are used for control unit mounting.
When ordering, specify the part nos. in order from the 3rd. station in the D side.
When entry of part numbers becomes complicated, indicate on the manifold specification sheet.

<Example> Non plug-in type

VV5FR4-10-061-03-A5	**1 set (Manifold base part no.)**
***VFR4110-5D**	**5 sets (2 position single part no.)**

→ The asterisk denotes the symbol for assembly. Prefix it to the part nos. of the solenoid valve, etc.

The 1st and 2nd station are used for control unit mounting.
When ordering, specify the part nos. in order from the 3rd. station in the D side.
When entry of part numbers becomes complicated, indicate on the manifold specification sheet.

Manifold with Control Unit: Plug-in Type/Non Plug-in Type

Plug-in type:

VV5FR4-01T-Station 1-Port size-AP Voltage of air release valve

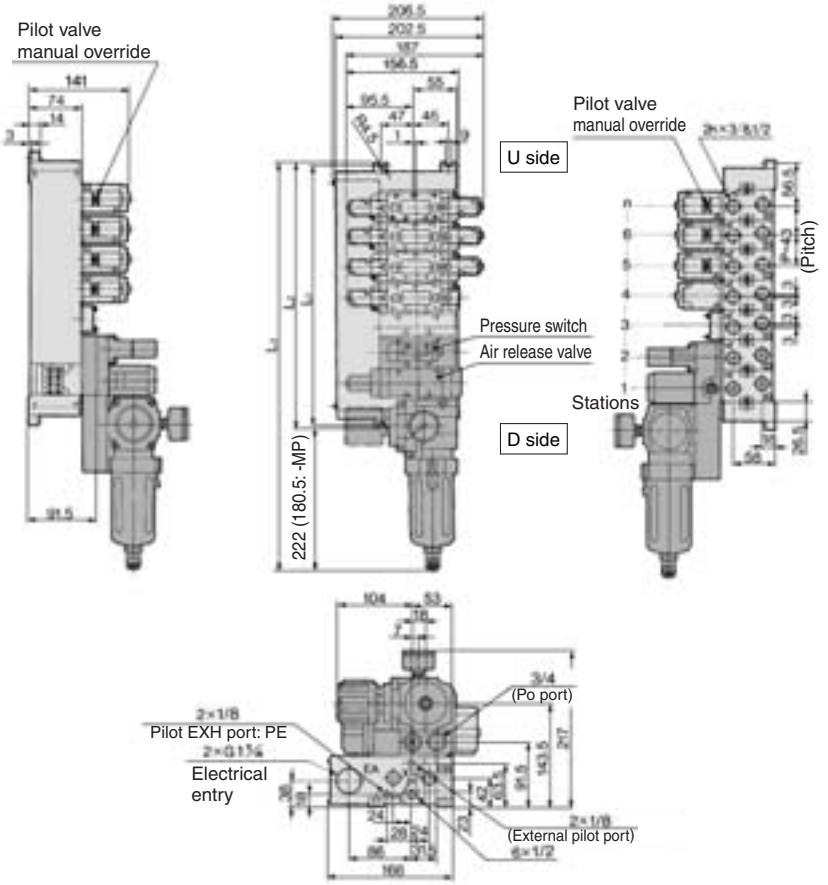

Example for manifold

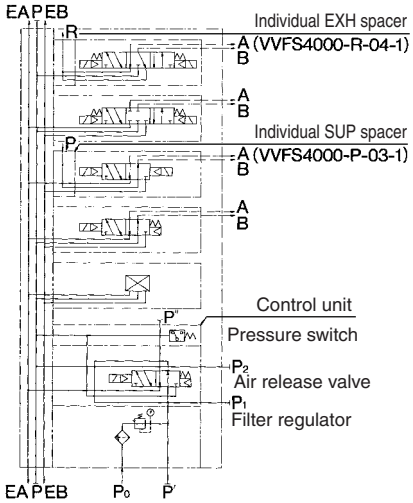

Non plug-in type:

VV5FR4-10-Station 1-Port size-AP Voltage of air release valve

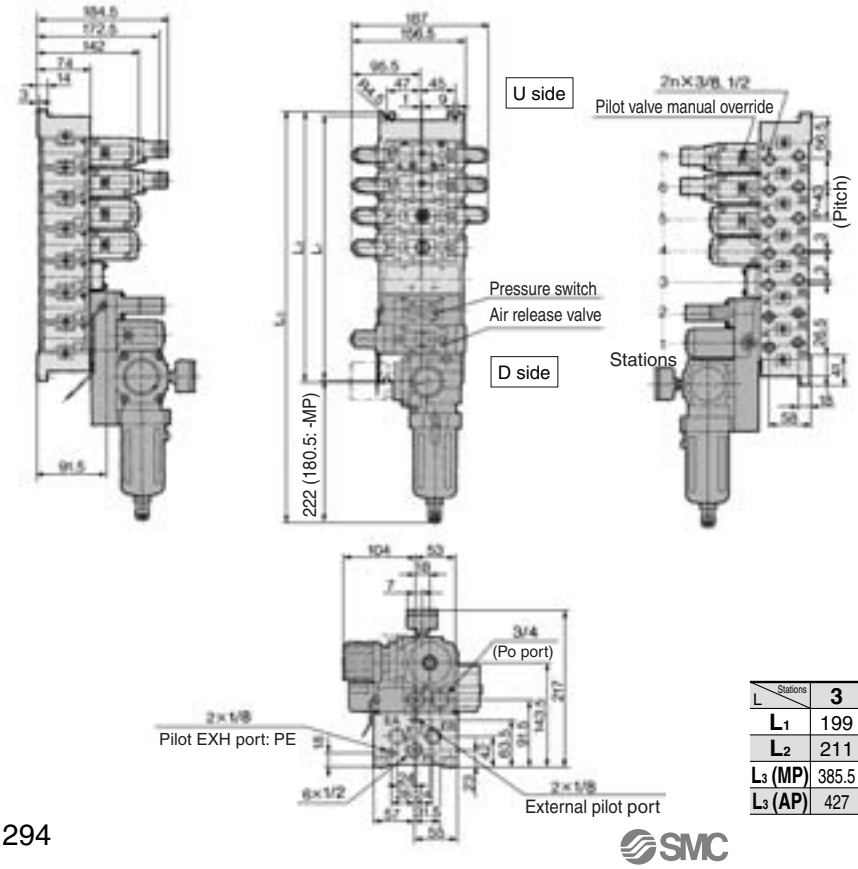

Example for manifold

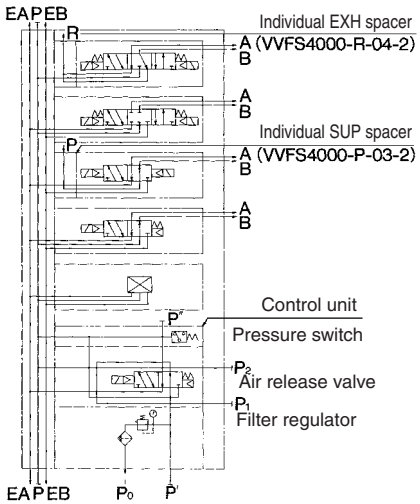

n: Station

L \ Stations	3	4	5	6	7	8	9	10	Formula
L_1	199	242	285	328	371	414	457	500	$L_1 = 43 \times n + 70$
L_2	211	254	297	340	383	426	469	512	$L_2 = 43 \times n + 82$
L_3 (MP)	385.5	428.5	471.5	514.5	557.5	600.5	643.5	686.5	$L_3 = 43 \times n + 256.5$
L_3 (AP)	427	470	513	556	599	642	685	728	$L_3 = 43 \times n + 298$

Manifold with Control Unit: Non Plug-in Type

Non plug-in type: VV5FR4-40-Station 1-Port size-AP Voltage of air release valve

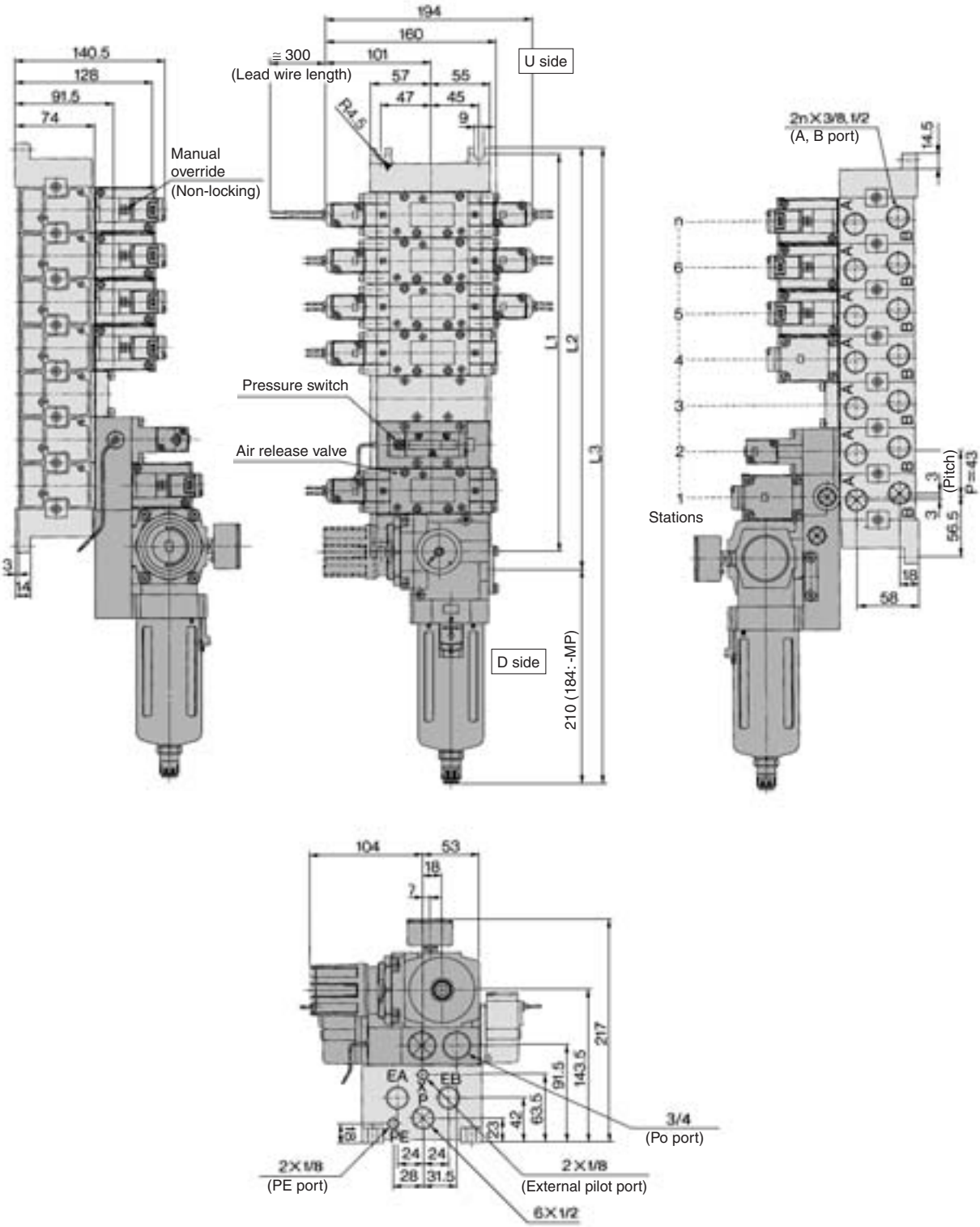

n: Station

L \ Stations	3	4	5	6	7	8	9	10	Formula
L_1	199	242	285	328	371	414	457	500	$L_1 = 43 \times n + 70$
L_2	211	254	297	340	383	426	469	512	$L_2 = 43 \times n + 82$
L_3 (MP)	385.5	428.5	471.5	514.5	557.5	600.5	643.5	686.5	$L_3 = 43 \times n + 256.5$
L_3 (AP)	427	470	513	556	599	642	685	728	$L_3 = 43 \times n + 298$

Manifold Base Construction: Plug-in Type/Non Plug-in Type

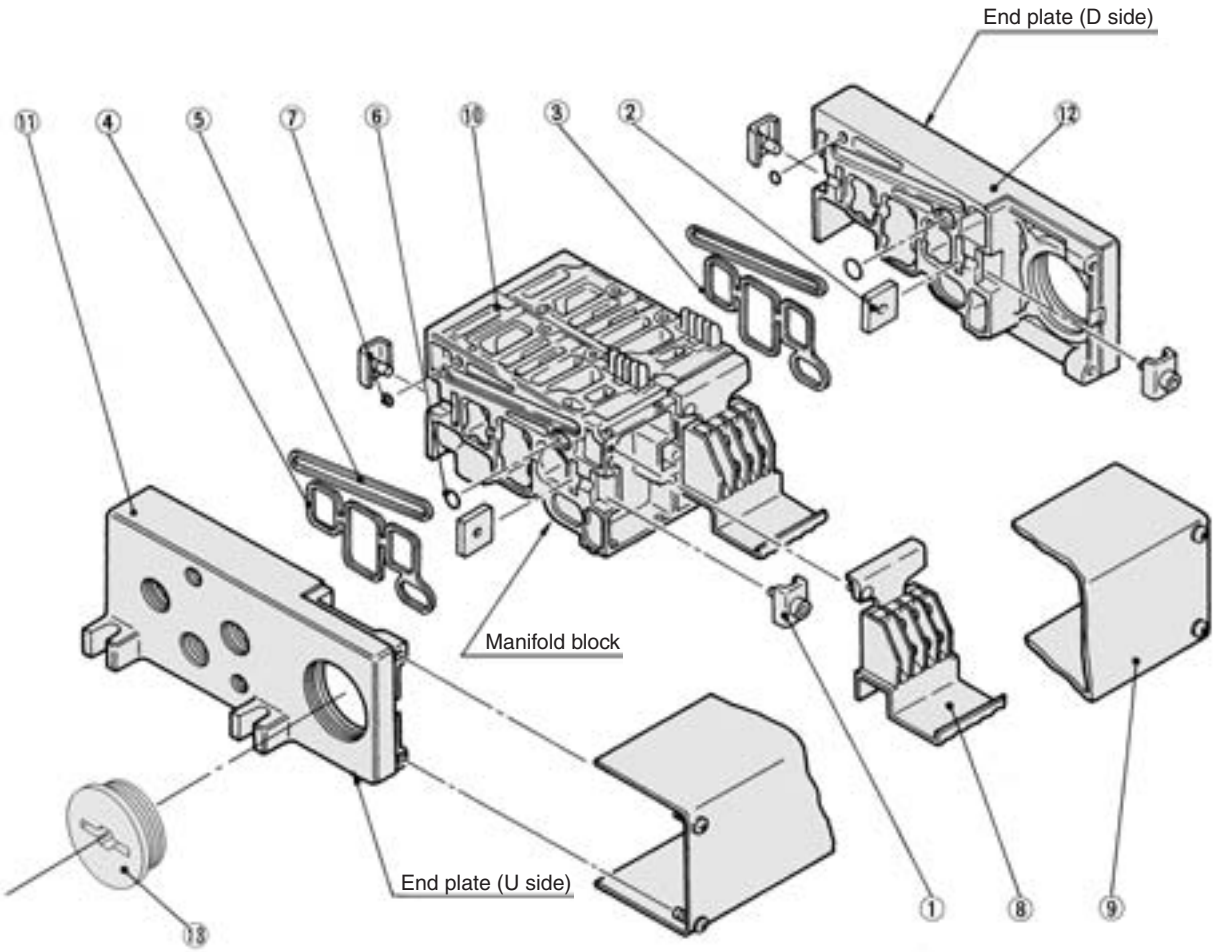

Replacement Parts

No.	Description	Material	Part no.
1	**Connection fitting A**	Steel	VVF4000-5-1A
2	**Connection fitting B**	Steel	VVF4000-5-2
3	**Gasket**	NBR	VVF4000-7 (for end plate)
4	**Gasket**	NBR	VVF4000-7-1 (for manifold block)
5	**Gasket**	NBR	VVF4000-8
6	**O-ring**	NBR	AS568-011
7	**O-ring**	NBR	P-3
8	**Terminal assembly**	—	VFR4000-14-1A
9	**Junction cover assembly**	—	For 01T | VVF4000-4A-Stations
13	**Rubber plug**	NBR	AXT336-9

Note) Manifold Base/Construction: Plug-in type with terminal block.

Replacement Parts: Sub Assembly

No.	Description	Assembly part no.	Component parts	Applicable manifold base
10	**Manifold block assembly** Note)	VFR4000-19-1A-03/04	Manifold block ⑩, Terminal ⑧, Connection bracket ①, ②, Gasket ④, ⑤, O-ring ⑥, ⑦, Receptacle assembly	Plug-in type
		VFR4000-19-2A-03/04	Manifold block ⑩, Connection bracket ①, ②, Gasket ④, ⑤, O-ring ⑥, ⑦	Non plug-in type
11	**End plate (U side) assembly**	VVF4000-2A-1	End plate (U) ⑪, Metal joint ①, ②	Plug-in type
		VVF4000-2A-2	End plate (U) ⑪, Metal joint ①, ②	Non plug-in type
12	**End plate (D side) assembly**	VVF4000-3A-1	End plate (D) ⑫, Connection bracket ①, ②, Gasket ③, ④, O-ring ⑥, ⑦	Plug-in type
		VVF4000-3A-2	End plate (D) ⑫, Connection bracket ①, ②, Gasket ③, ⑤, O-ring ⑥, ⑦	Non plug-in type

Note) For side ported

∗ Contact SMC for CE-compliant products.

5 Port Pilot Operated Solenoid Valve
Rubber Seal, Plug-in/Non Plug-in
Series VFR5000

CE [Option]

Plug-in type

Non plug-in type

Standard Specifications

Valve specifications	Fluid			Air
	Operating pressure range	2 position single/3 position		0.2 to 0.9 MPa
		2 position double		0.1 to 0.9 MPa
	Ambient and fluid temperature			–10 to 50°C (No freezing. Refer to page 5.)
	Lubrication			Non-lube (1)
	Manual override			Non-locking push type
	Mounting orientation			Unrestricted
	Shock/Vibration resistance			300/50m/s² (2)
	Enclosure			Dustproof
Electricity specifications	Coil rated voltage			100, 200 VAC (50/60 Hz), 24 VDC
	Allowable voltage fluctuation			–15 to –10% of rated voltage
	Apparent power (AC) (3)		Inrush	5.6 VA/50 Hz, 5.0 VA/60 Hz
			Holding	3.4 VA/50 Hz, 2.3 VA/60 Hz
	Power consumption (DC) (3)			1.8 W
	Electrical entry			Plug-in type: Conduit terminal
				Non plug-in type: Grommet terminal, DIN terminal

Note 1) Use turbine oil Class 1 (ISO VG32), if lubricated. Note 3) At rated voltage
Note 2) Impact resistance: No malfunction occurred when it is tested with a drop tester in the axial direction and at the right angles to the main valve and armature in both energized and de-energized states every once for each condition. (Values at the initial period)
Vibration resistance: No malfunction occurred in a one-sweep test between 45 and 2000 Hz. Test was performed at both energized and de-energized states in the axial direction and at the right angles to the main valve and armature. (Values at the initial period)

JIS Symbol

2 position	3 position
Single	Closed center
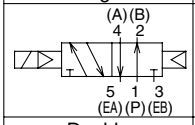	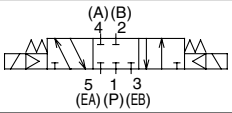
Double	Exhaust center
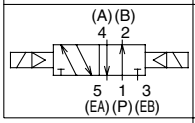	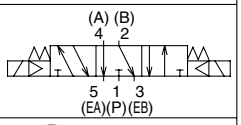
	Pressure center
	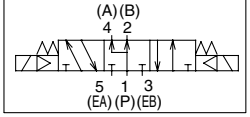

Option Specifications

Pilot type		External pilot Note)
Manual override	Main valve	Direct manual override
	Pilot valve	Non-locking push type A (Extended), Locking type B (Tool required), Locking type C (Lever)
Coil rated voltage		110 to 120, 220, 240 VAC 50/60 Hz
		12 VDC
Porting specifications		Bottom ported
Option		With light/surge voltage suppressor

Note) Operating pressure:
2 position 0 to 0.9 MPa
3 position 0.15 to 0.9 MPa

Pilot pressure:
2 position single 0.2 to 0.9 MPa
2 position double 0.1 to 0.9 MPa
3 position 0.3 x P + 0.1 to 0.9 MPa
(P: Operating pressure)

Model

Type of actuation		Model: Plug-in	Model: Non plug-in	Port size	Flow characteristics (1) 1 → 4/2 (P → A/B) C [dm³/(s·bar)]	b	Cv	4/2 → 5/3 (A/B → EA/EB) C [dm³/(s·bar)]	b	Cv	Max. (2) operating cycle (Hz)	Response (3) time (ms)	Mass (4) (kg)
2 position	Single	VFR510□	VFR511□	3/8	17	0.36	4.7	18	0.40	5.0	5	60 or less	1.77 (1.72)
				1/2	20	0.28	5.2	23	0.32	6.2			
				3/4	23	0.27	5.8	25	0.21	6.2			
	Double	VFR520□	VFR521□	3/8	16	0.37	4.6	18	0.41	5.1	5	60 or less	1.88 (1.83)
				1/2	20	0.27	5.2	23	0.32	6.1			
				3/4	23	0.26	5.8	25	0.20	6.1			
3 position	Closed center	VFR530□	VFR531□	3/8	15	0.38	4.1	16	0.31	4.3	3	80 or less	1.87 (1.82)
				1/2	17	0.31	4.6	20	0.33	5.4			
				3/4	18	0.28	4.7	21	0.30	5.4			
	Exhaust center	VFR540□	VFR541□	3/8	14	0.38	3.6	17 [16]	0.39 [0.35]	4.8 [4.3]	3	80 or less	1.87 (1.82)
				1/2	17	0.29	4.6	21 [18]	0.31 [0.34]	5.6 [5.0]			
				3/4	18	0.29	4.6	23 [20]	0.27 [0.33]	5.9 [5.2]			
	Pressure center	VFR550□	VFR551□	3/8	16 [9.4]	0.39 [0.40]	4.2 [2.6]	17	0.36	4.5	3	80 or less	1.87 (1.82)
				1/2	18 [9.7]	0.32 [0.45]	5.0 [2.9]	20	0.31	5.3			
				3/4	19 [9.2]	0.35 [0.48]	5.4 [2.8]	21	0.29	5.6			

Note 1) [ ]: Denotes the normal position.
Note 2) Min. operating frequency is once in 30 days.
Note 3) Based on dynamic performance test, JIS B 8375-1981. (Coil temperature: 20°C, at rated voltage, without surge voltage suppressor)
Note 4) For VFR5□00-□FZ-06, ( ): VFR5□10-□DZ-06

How to Order

Plug-in VFR5 □ 0 0 □ – 5 F □ □ – □ 06 □ – □

Non plug-in VFR5 □ 1 1 □ – 1 D □ □ – □ 06 □ – □

Electrical entry

F: Plug-in type, conduit type

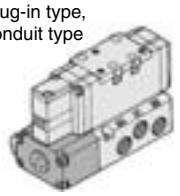

Option

Nil	None
Z *	With light/surge voltage suppressor

Porting specifications

Nil	Side ported
B *	Bottom ported

* In the case of external pilot (Option), bottom piping is not available.

Port size

Nil	Without sub-plate
03	3/8
04	1/2
06	3/4

Thread type

Nil	Rc
F	G
N	NPT
T	NPTF

Symbol

1	2 position single (A)(B) 4 2 / 5 1 3 (EA)(P)(EB)
2	2 position double (A)(B) 4 2 / 5 1 3 (EA)(P)(EB)
3	3 position closed center (A)(B) 4 2 / 5 1 3 (EA)(P)(EB)
4	3 position exhaust center (A)(B) 4 2 / 5 1 3 (EA)(P)(EB)
5	3 position pressure center (A)(B) 4 2 / 5 1 3 (EA)(P)(EB)

Body option

0	Standard
1 *	Direct manual override

* Option

Pilot type

Nil	Internal pilot
R *	External pilot

* Option

Coil rated voltage

1	100 VAC, 50/60 Hz
2	200 VAC, 50/60 Hz
3 *	110 to 120 VAC, 50/60 Hz
4 *	220 VAC, 50/60 Hz
5	24 VDC
6 *	12 VDC
7 *	240 VAC, 50/60 Hz
9 *	Other

* Option

Electrical entry

E: Grommet terminal

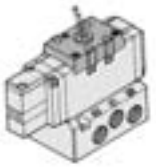

D: DIN terminal

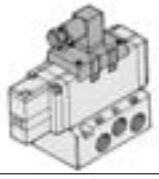

Pilot valve Manual override

Nil: Non-locking push type

A *: Non-locking push type A (Extended)

B *: Locking type B (Tool required)

C *: Locking type C (Lever)

* Option

CE-compliant

Nil	—
Q	CE-compliant *

* Electrical entry: D and F only

How to Order Pilot Valve Assembly

SF4 – 1 F □ – 70 – □

Coil rated voltage

Symbol	Rated voltage
1	100 VAC, 50/60 Hz
2	200 VAC, 50/60 Hz
3 *	110 to 120 VAC, 50/60 Hz
4 *	220 VAC, 50/60 Hz
5	24 VDC
6 *	12 VDC
7 *	240 VAC, 50/60 Hz
9 *	Other

* Option

Manual override

Nil	Non-locking push type
A *	Non-locking push type A (Extended)
B *	Locking type B (Tool required)
C *	Locking type C (Lever)

* Option

CE-compliant

Nil	—
Q	CE-compliant

Cylinder Speed Chart

Use as a guide for selection.
Please confirm the actual conditions with SMC Sizing Program.

Series	Average speed (mm/s)	Bore size: Series CS1/CS2, Pressure 0.5 MPa, Load factor 50%, Stroke 300 mm						
		ø125	ø140	ø160	ø180	ø200	ø250	ø300
VFR5100-06	800							
	700							
	600							
	500							
	400							
	300							
	200							
	100							
	0							

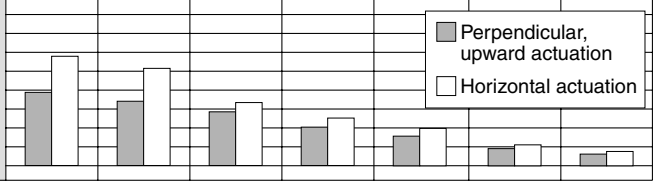

∗ It is when the cylinder is extending that is meter-out controlled by speed controller which is directly connected with cylinder, and its needle valve with being fully open.
∗ The average velocity of the cylinder is what the stroke is divided by the total stroke time.
∗ Load factor: ((Load weight x 9.8)/Theoretical force) x 100%

Conditions

		Series CS1/CS2
VFR5110-06	Tube x Length	SGP20A x 1 m
	Speed controller	AS500-06
	Silencer	AN500-06

How to Order Sub-plate Assembly

Pilot type

Nil	Internal pilot
R	External pilot

<Side ported>

Plug-in VFR5000−P− □ 06 □

Non plug-in VFS5000−S− □ 06 □

<Bottom ported>

Plug-in VFR5000−P− B 06 □

Non plug-in VFS5000−S− B 06 □

Thread type

Nil	Rc
F	G
N	NPT
T	NPTF

Piping port

03	3/8
04	1/2
06	3/4

Note) • Bottom ported is not available for external pilot.
• Mounting bolts and gaskets are not included.

Construction

2 position single

VFR51□0

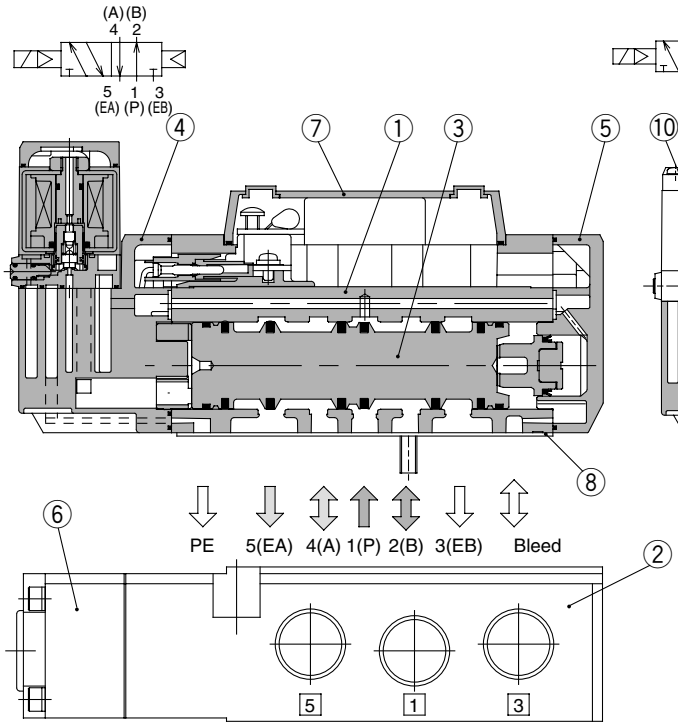

2 position double

VFR52□0

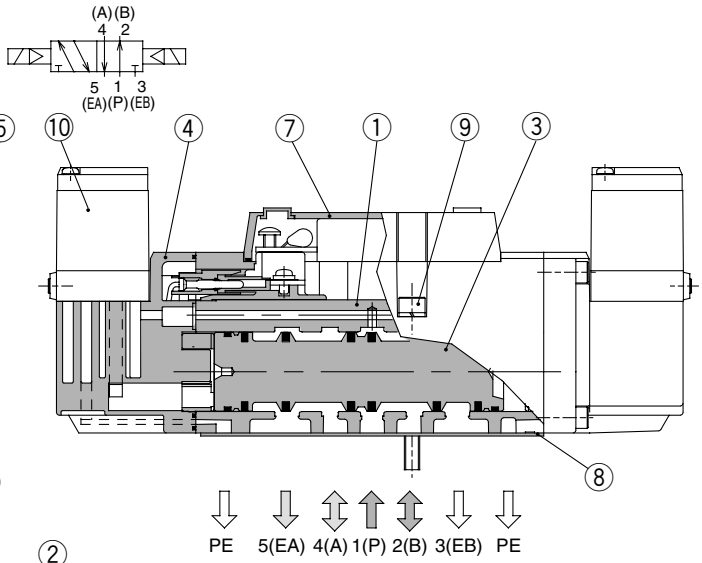

3 position closed center/exhaust center/pressure center

Closed center: VFR53□0

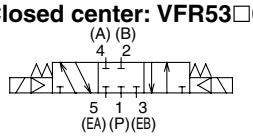

Exhaust center: VFR54□0

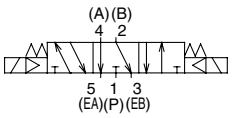

Pressure center: VFR55□0

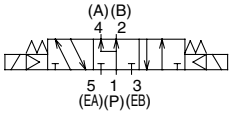

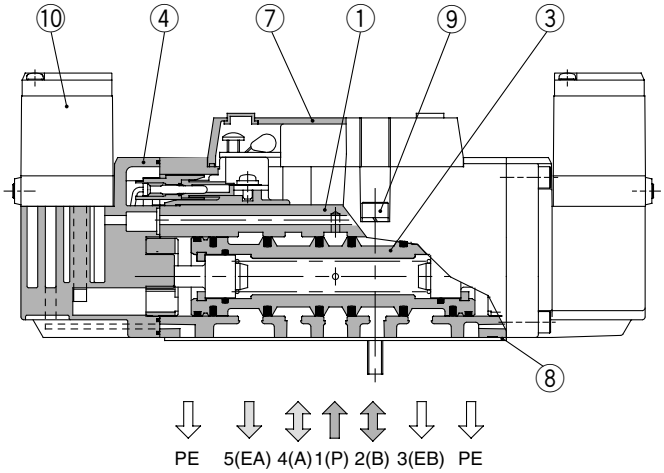

This figure shows a closed center type.

Component Parts

No.	Description	Material	Note
1	**Body**	Aluminum die-casted	Platinum silver
2	**Sub-plate**	Aluminum die-casted	Platinum silver
3	**Spool valve**	Aluminum, NBR	
4	**Adapter plate**	Resin	Black

Component Parts

No.	Description	Material	Note
5	**End plate**	Resin	Black
6	**Junction cover**	Resin	Black
7	**Light cover**	Resin	

Replacement Parts

No.	Description	Material	Part no.		
			VFR51□□	**VFR52□□**	**VFR53□□/54□□/55□□**
8	**Gasket**	NBR	AXT627-10-1	AXT627-10-1	AXT627-10-1
9	**Hexagon socket head screw**	Steel	AXT627-42-1 (M5 x 50)	AXT627-42-1 (M5 x 50)	AXT627-42-1 (M5 x 50)
10	**Pilot valve assembly**	—	Refer to “How to Order Pilot Valve Assembly” on page 1298.		

Plug-in: 2 Position Single/Double, 3 Position Closed Center/Exhaust Center/Pressure Center

2 position single: VFR510$^{0}_{1}$-□F(Z)

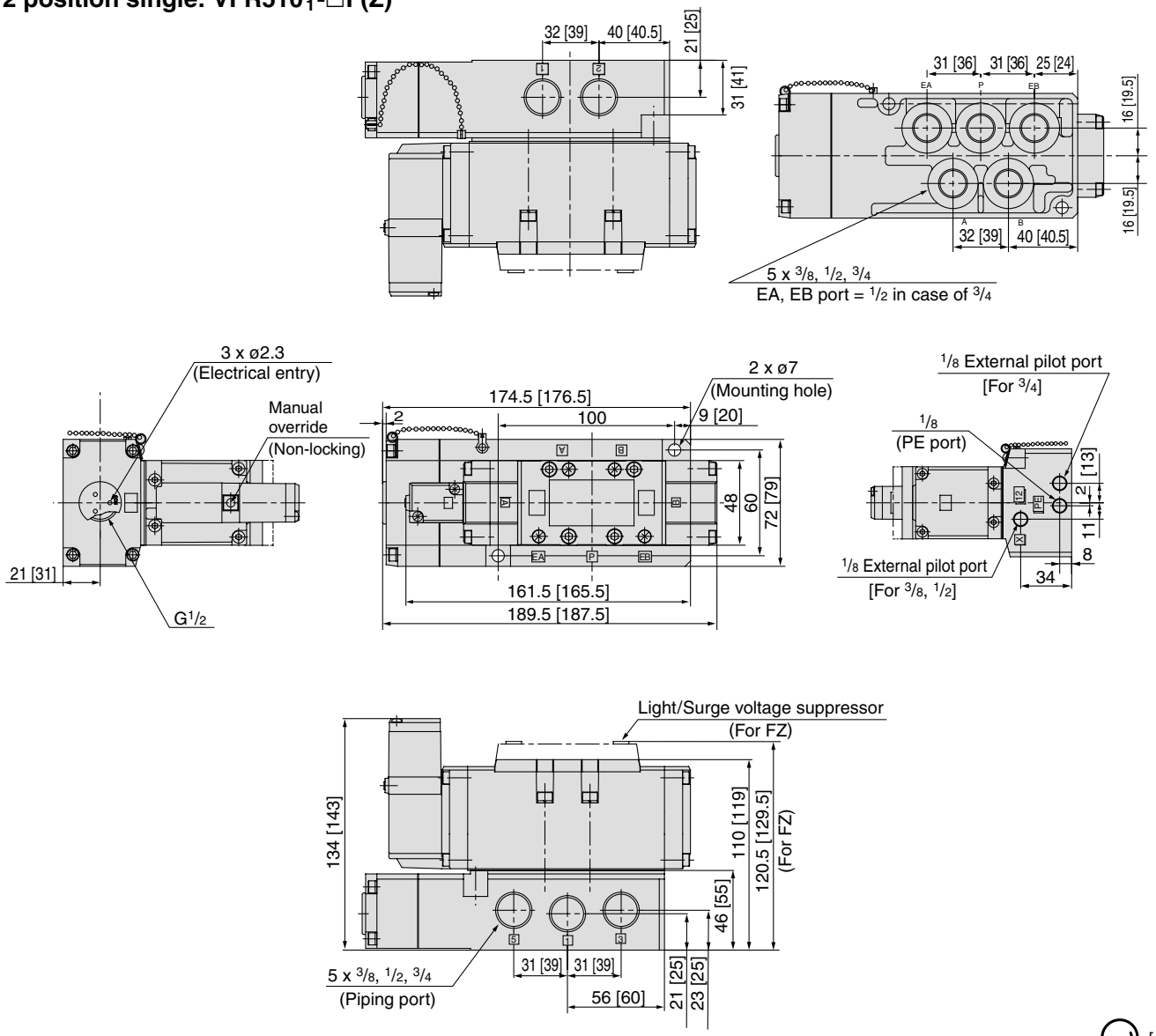

[ ] = 3/4

2 position double: VFR520$^{0}_{1}$-□F(Z)

3 position closed center: VFR530$^{0}_{1}$-□F(Z)
3 position exhaust center: VFR540$^{0}_{1}$-□F(Z)
3 position pressure center: VFR550$^{0}_{1}$-□F(Z)

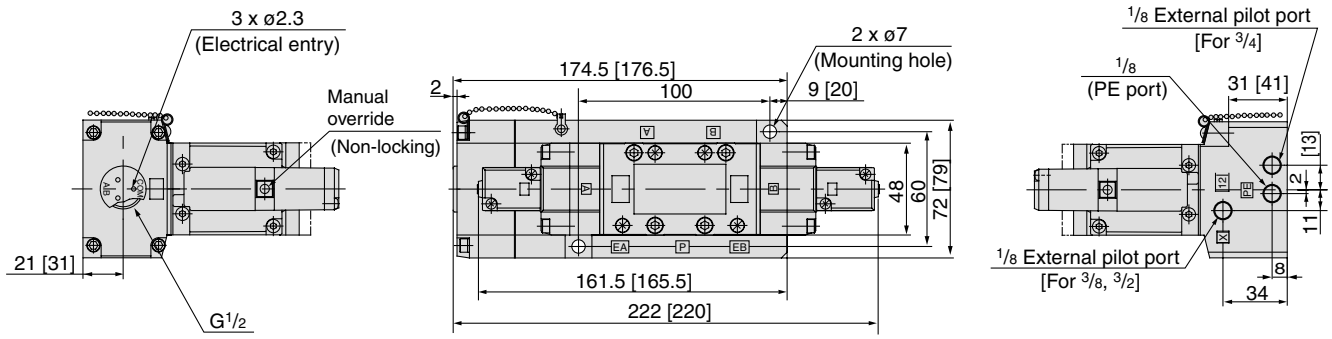

∗ Other dimensions are the same as the single type.
[ ] = 3/4

Plug-in: 2 Position Single/Double, 3 Position Closed Center/Exhaust Center/Pressure Center

2 position single: VFR511$^{0}_{1}$-□E, VFR511$^{0}_{1}$-□D(Z)

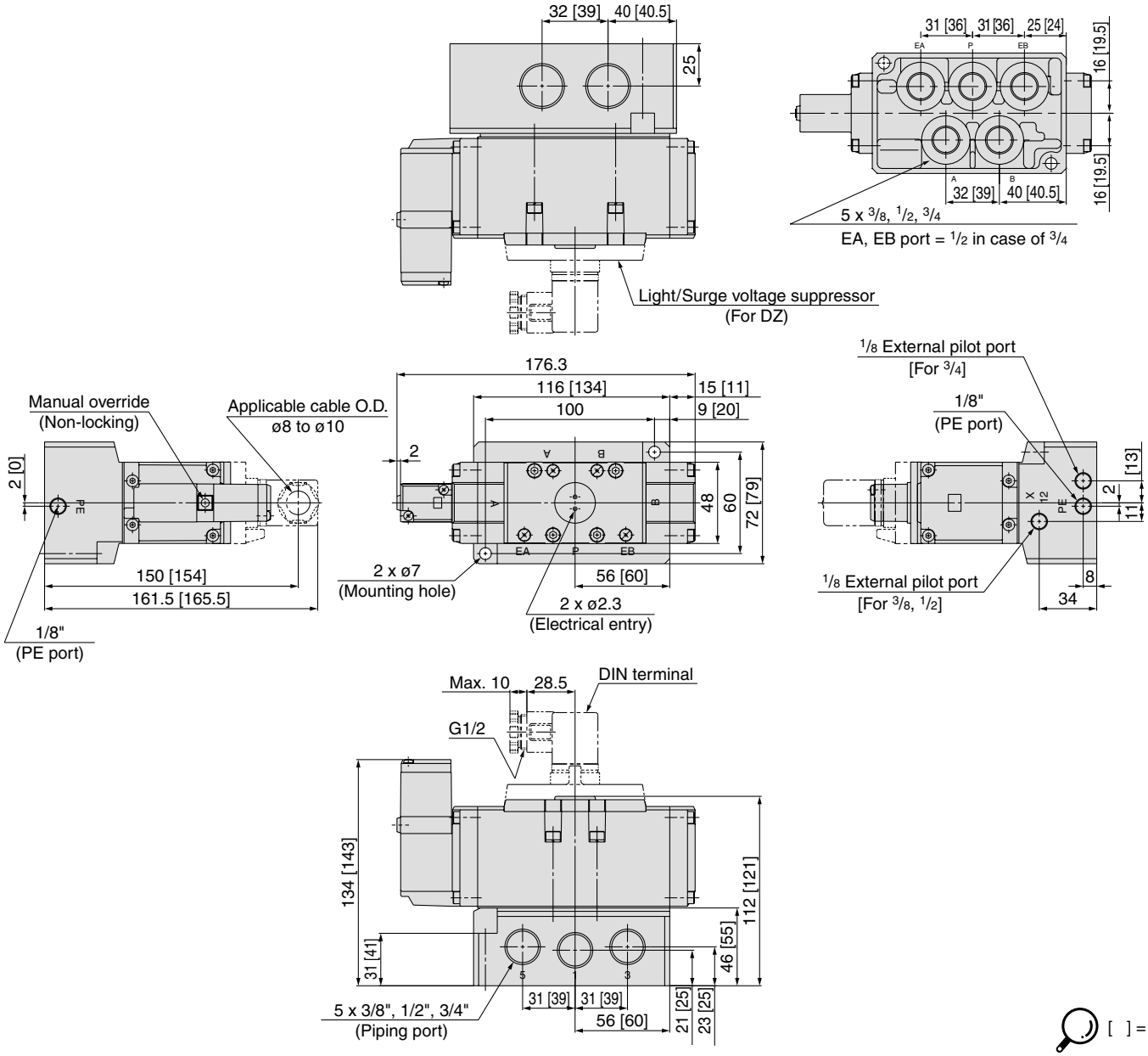

2 position double: VFR521$^{0}_{1}$-□E, VFR521$^{0}_{1}$-□D(Z)

3 position closed center: VFR531$^{0}_{1}$-□E, VFR531$^{0}_{1}$-□D(Z)
3 position exhaust center: VFR541$^{0}_{1}$-□E, VFR541$^{0}_{1}$-□D(Z)
3 position pressure center: VFR551$^{0}_{1}$-□E, VFR551$^{0}_{1}$-□D(Z)

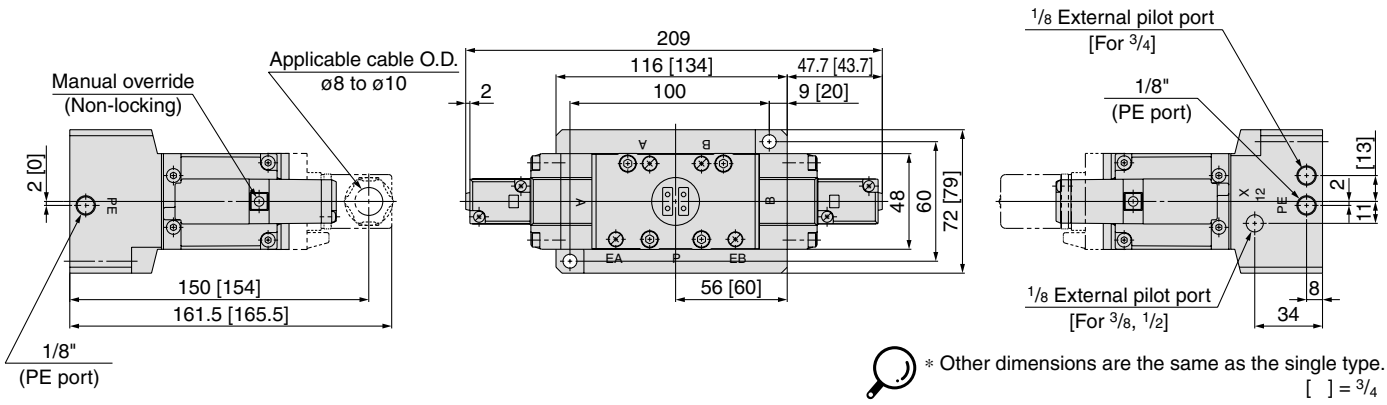

Manifold Specifications

Manifold Specifications

Base model	Wiring	Porting specifications	Port size Rc		Stations	Applicable valve model
		A, B port	P, EA, EB	A, B		
Plug-in type **VV5FR5-01□(-Q)**	• With terminal block	Side/Bottom	¾	½, ¾	2 to 10	VFR5□0□-□F(-Q)
	• With multi-connector • With D-sub connector				2 to 8	
Non plug-in type **VV5FR5-10(-Q)**	• Grommet terminal • DIN terminal				2 to 10	VFR5□1□-□E VFR5□1□-□D(-Q)

How to Order Manifold Assembly

Instruct by specifying the valves, blanking plate and manifold option parts assembly to be mounted on the manifold along with the manifold base model no.

<Example> Plug-in type with terminal block: 6 stations

VV5FR5-10T-061-04 ..... **1 set (Manifold part number)**
∗VFR5100-5FZ ..... **3 sets (2 position single)**
∗VFR5200-5FZ ..... **2 sets (2 position double)**
∗VVFS5000-10A ..... **1 set (Blanking plate assembly part no.)**
→ The asterisk denotes the symbol for assembly. Prefix it to the part nos. of the solenoid valve, etc.

Valve arrangement is counted from the D side.
When ordering, specify the part nos. in order from the 1st. station in the D side.
When entry of part numbers becomes complicated, indicate on the manifold specification sheet.

<Example> Non plug-in type: 6 stations

VV5FR5-10-061-04 ..... **1 set (Manifold part number)**
∗VFR5110-5D ..... **5 sets (2 position single)**
∗VFR5410-5D ..... **1 set (3 position exhaust center)**
∗VVFS5000-R-04-2 ..... **1 set (Individual EXH spacer)**
→ The asterisk denotes the symbol for assembly. Prefix it to the part nos. of the solenoid valve, etc.

Valve arrangement is counted from the D side.
When ordering, specify the part nos. in order from the 1st. station in the D side.
When entry of part numbers becomes complicated, indicate on the manifold specification sheet.

Plug-in Type: With Terminal Block

- **Since lead wires of solenoid valve are connected with the terminals on upper surface of terminal block corresponding lead wires from power source can be wired at the bottom of terminal block.**

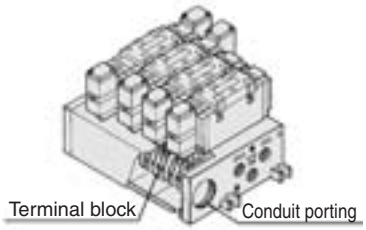

VV5FR5 – 01T – 06 1 – 04 ☐ – ☐

Series VFR5000 Manifold

Plug-in type with terminal block

Stations

02	2 stations
⋮	⋮
10	10 stations

Symbol

Symbol	Passage P	Passage EA, EB	Porting specifications (A, B)
1	Common	Common	Side
2			Bottom ∗

∗ Option

Port size

Symbol	P, EA, EB	A, B ∗
04	¾	½
06		¾
M		Mixed

∗ For bottom ported: 1/2 only.

Thread type

Nil	Rc
F	G
N	NPT
T	NPTF

CE-compliant

Nil	—
Q	CE-compliant

Plug-in Type: With Multi-connector (For wiring specifications, refer to page 1326.)

- **Master connection of power and solenoid valves.**
- **Quick wiring permits ease of installation.**

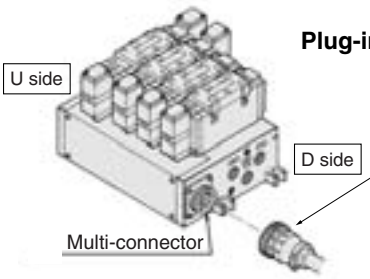

Plug assembly (Option)
Refer to page 1326.

VV5FR5 – 01C D – 05 1 – 04 ☐ – ☐

Series VFR5000 Manifold

Plug-in Type with multi-connector

Connector mounting direction

D	D side mounting
U	U side mounting

Stations

02	2 stations
⋮	⋮
08 ∗	8 stations

∗ Max: 8 stations

Symbol

Symbol	Passage P	Passage EA, EB	Porting specifications (A, B)
1	Common	Common	Side
2			Bottom ∗

∗ Option

Port size

Symbol	P, EA, EB	A, B ∗
04	¾	½
06		¾
M		Mixed

∗ For bottom ported: 1/2 only.

Thread type

Nil	Rc
F	G
N	NPT
T	NPTF

CE-compliant

Nil	—
Q	CE-compliant

Plug-in Type: With D-sub Connector (For wiring specifications, refer to page 1326.)

- Wide range of interchangeability (D-sub connector (25P) conforming to MIL standard)
- Quick wiring permits easier installation.

VV5FR5 – 01F D – 06 1 – 04 ☐ – ☐

- Series VFR5000 Manifold
- Plug-in type with D-sub connector
- Connector mounting direction

D	D side mounting
U	U side mounting

- Stations

02	2 stations
⋮	⋮
08 *	8 stations

* Max: 8 stations

- Symbol

Symbol	Passage P	Passage EA, EB	Porting specifications (A, B)
1	Common	Common	Side
2			Bottom *

* Option

- Port size

Symbol	P, EA, EB	A, B *
04	3/4	1/2
06		3/4
M		Mixed

* For bottom ported: 1/2 only.

- Thread type

Nil	Rc
F	G
N	NPT
T	NPTF

- CE-compliant

Nil	—
Q	CE-compliant

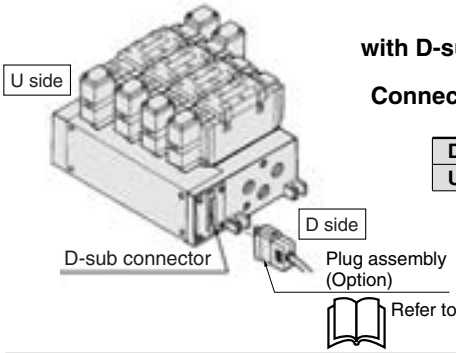

Refer to page 1326.

Non Plug-in Type: Grommet Terminal, DIN Terminal

- Wiring for every valve

VV5FR5 – 10 – 05 1 – 04 ☐ – ☐

- Series VFR5000 Manifold
- Non plug-in type
- Stations

02	2 stations
⋮	⋮
10	10 stations

- Symbol

Symbol	Passage P	Passage EA, EB	Porting specifications (A, B)
1	Common	Common	Side
2			Bottom *

* Option

- Port size

Symbol	P, EA, EB	A, B *
04	3/4	1/2
06		3/4
M		Mixed

* For bottom ported: 1/2 only.

- Thread type

Nil	Rc
F	G
N	NPT
T	NPTF

- CE-compliant

Nil	—
Q	CE-compliant

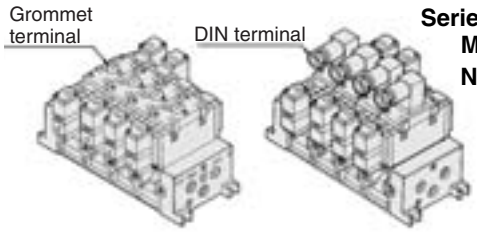

Note) Manifold base is common for Series VFS5000. Terminal block is not required.

Manifold/Option Parts Assembly

Individual SUP spacer
Supply port can be located at each valve individually after individual SUP spacer is mounted on manifold block.

Body type	Plug-in type	Non plug-in type
Part no.	VVFS5000-P-04-1	VVFS5000-P-04-2

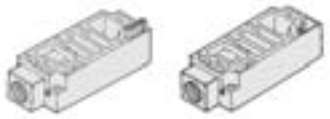

Individual EXH spacer
Exhaust port can be located at each valve individually after individual EXH spacer is mounted on manifold block. (Common EXH type)

Body type	Plug-in type	Non plug-in type
Part no.	VVFS5000-R-04-1	VVFS5000-R-04-2

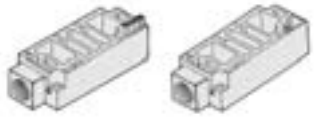

SUP block disk
When 2 or more pressures (high and low) are supplied to one manifold, insert a disk between the stations which are supplied different pressures.

Body type	Plug-in type	Non plug-in type
Part no.	AXT628-12A	

EXH block disk
Use exhaust blocks to eliminate back flow to other stations. Use supply disks to operate two pressures on the same manifold.

Body type	Plug-in type	Non plug-in type
Part no.	AXT512-14-1A	

EXH block disk

SUP block disk

Throttle valve spacer
Mount interface speed control on manifold block. Cylinder speed can be controlled by metered out flow.

Body type	Plug-in type	Non plug-in type
Part no.	VVFS5000-20A-1	VVFS5000-20A-2

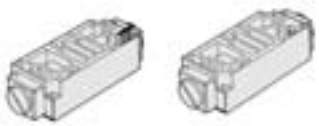

Interface regulator
When interface regulator is mounted on manifold block, regulation to that valve is possible.
(Refer to “Flow Characteristics” on page 1324 before operation.)

Body type	Plug-in type	Non plug-in type
P port regulation	ARBF5050-00-P-1	ARBF5050-00-P-2
A port regulation	ARBF5050-00-A-1	ARBF5050-00-A-2
B port regulation	ARBF5050-00-B-1	ARBF5050-00-B-2

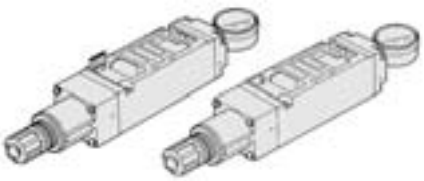

Blanking plate
It is used by attaching on the manifold block for being prepared for removing a valve for maintenance reasons or planning to mount a spare valve, etc.

Body type	Plug-in type	Non plug-in type
Part no.	VVFS5000-10A	

Manifold Option

With exhaust cleaner
Plug-in type/Non plug-in type
- High noise reduction effect: 35 dB or more
- Drainage and mist are collected (99.9% or more).
- Piping work is reduced.

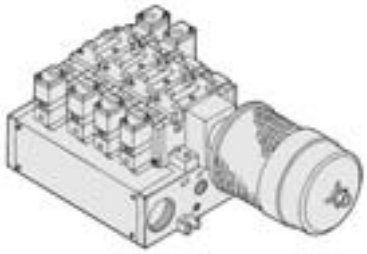

For details, refer to page 1308.

Manifold: Plug-in Type/Non Plug-in Type

Plug-in type (With terminal block):
VV5FR5-01T-Station 1-Bore size

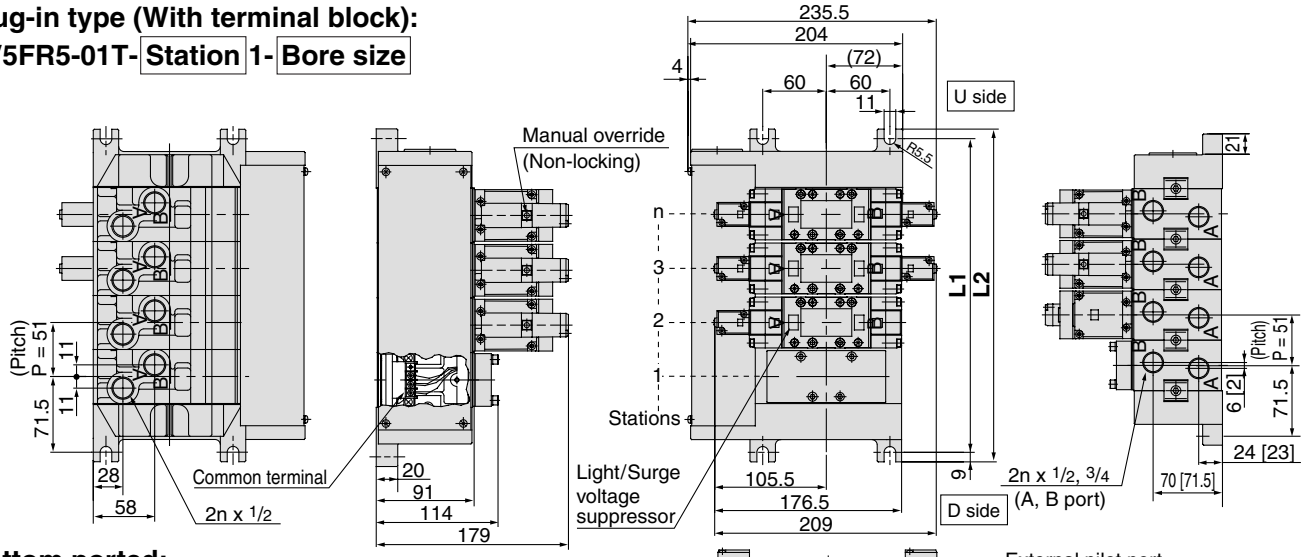

Bottom ported:
VV5FR5-01T-Station 2-Bore size

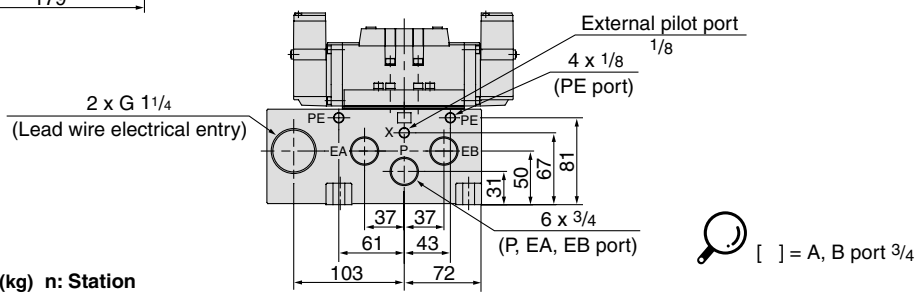

[ ] = A, B port 3/4

Formula for manifold weight M = 0.911n + 1.621 (kg) n: Station

Non plug-in type: VV5FR5-10-Station 1-Bore size

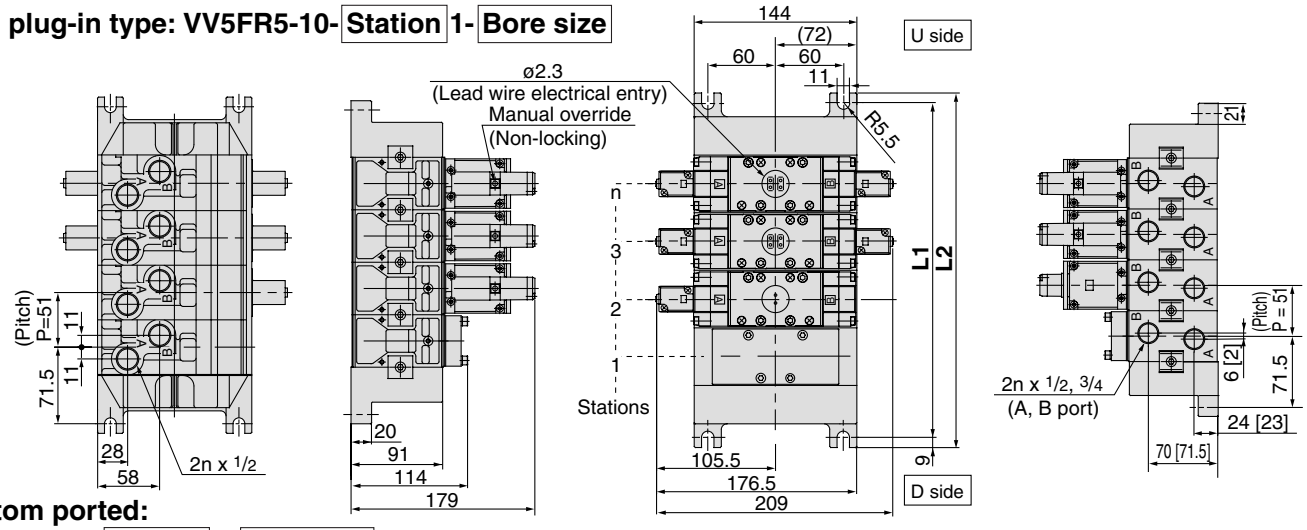

Bottom ported:
VV5FR5-10-Station 2-Port size

DIN terminal

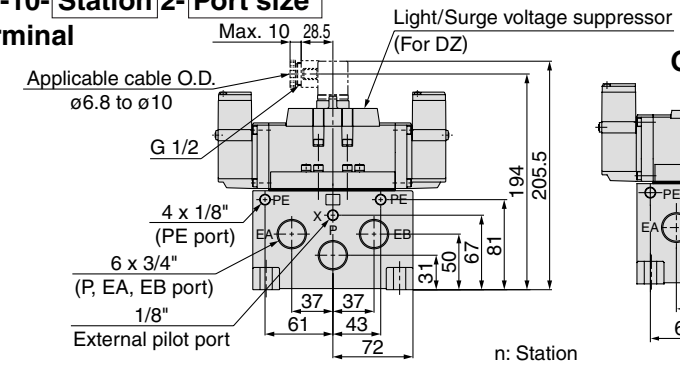

Grommet with terminal

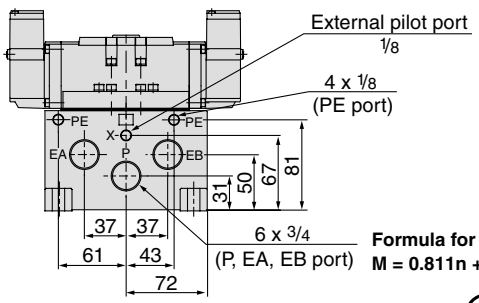

n: Station

L \ Stations	2	3	4	5	6	7	8	9	10	Formula
L_1	194	245	296	347	398	449	500	551	602	$L_1 = 51 \times n + 92$
L_2	212	263	314	365	416	467	518	569	620	$L_2 = 51 \times n + 110$

Formula for manifold weight M = 0.811n + 1.231 (kg) n: Stations

[ ] = A, B port 3/4

Manifold/Plug-in type: With Multi-connector/With D-sub connector

Plug-in type/With multi-connector: VV5FR5-01CD-Station 1-Bore size, VV5FR5-01CU-Station 1-Bore size

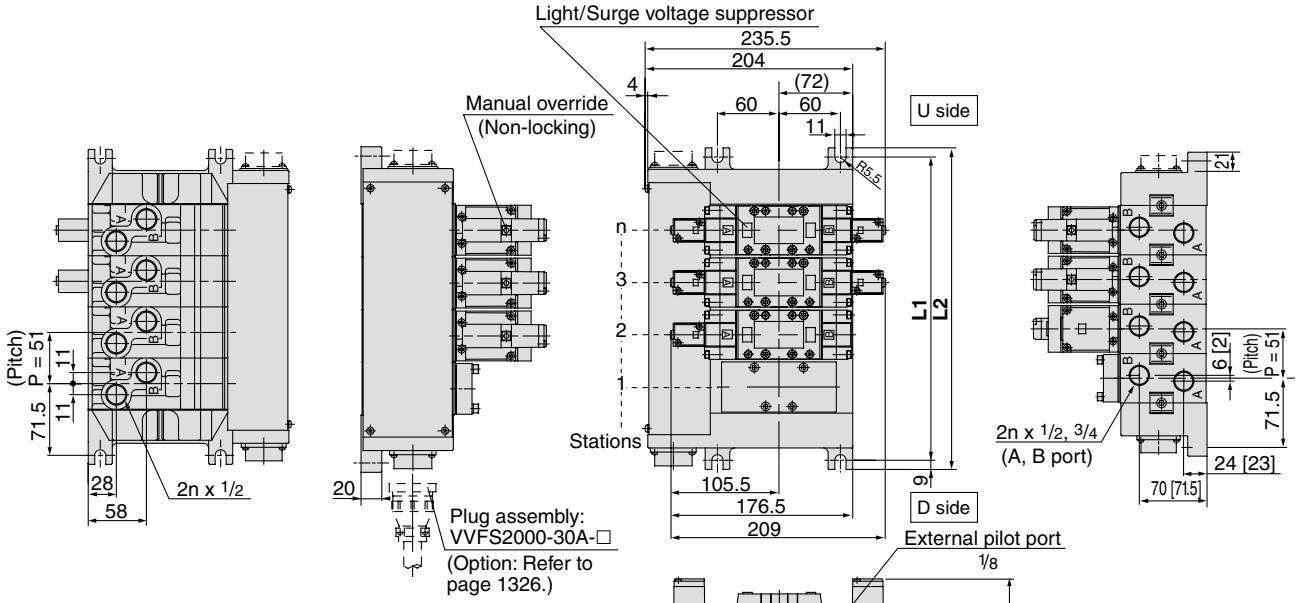

Bottom ported:
VV5FR5-01CD/CU-Station 2-Bore size

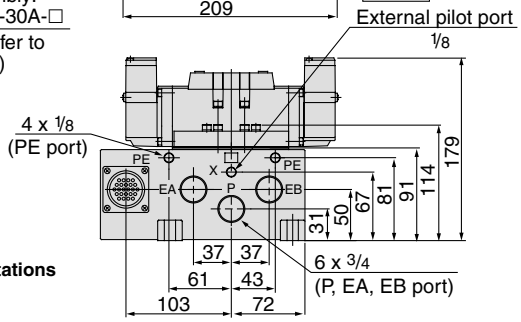

Formula for manifold weight M = 0.916n + 1.709 (kg) n: Stations

∗ For wiring specifications, refer to page 1326.

[ ] = A, B port 3/4

Plug-in type/With D-sub connector: VV5FR5-01FD-Station 1-Bore size, VV5FR5-01FU-Station 1-Bore size

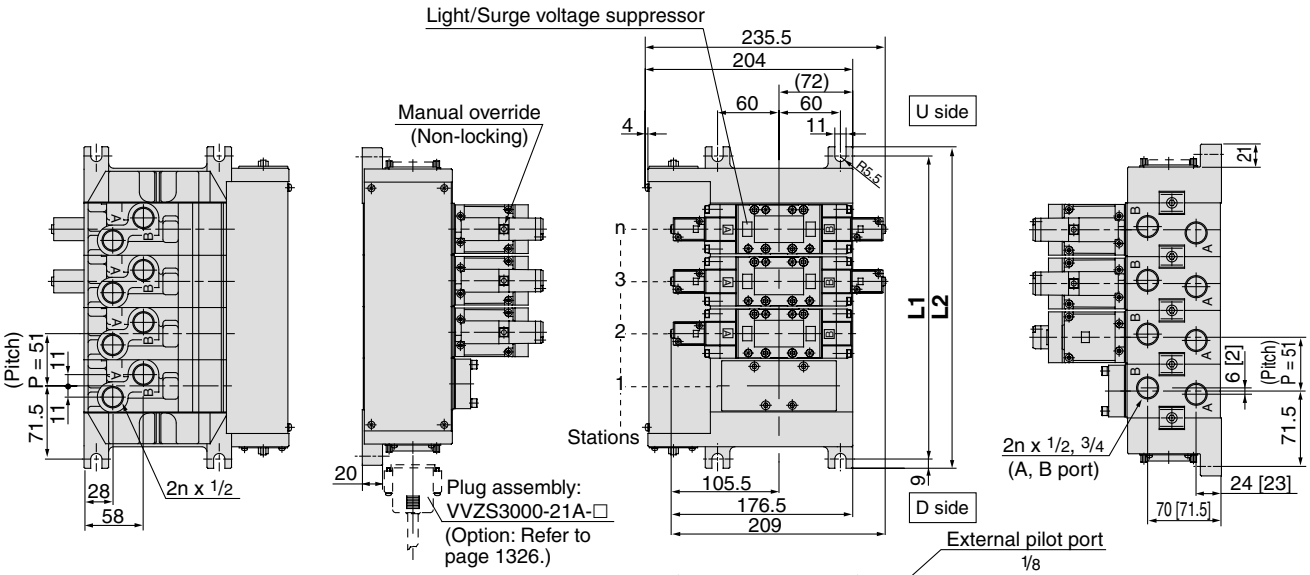

Bottom ported:
VV5FR5-01FD/FU-Station 2-Bore size

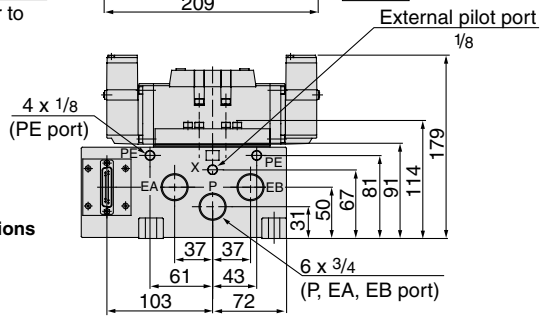

Formula for manifold weight M = 0.916n + 1.633 (kg) n: Stations

∗ For wiring specifications, refer to page 1326.

n: Station

L \ Stations	2	3	4	5	6	7	8	Formula
L_1	194	245	296	347	398	449	500	$L_1 = 51 \times n + 92$
L_2	212	263	314	365	416	467	518	$L_2 = 51 \times n + 110$

[ ] = A, B port 3/4

Manifold with Exhaust Cleaner

- **Protection of work environment**
- **Reduction of valve exhaust noise of 35 dB or more**
- **Drainage and mist are collected. (99.9% or more)**
- **Piping work is reduced.**

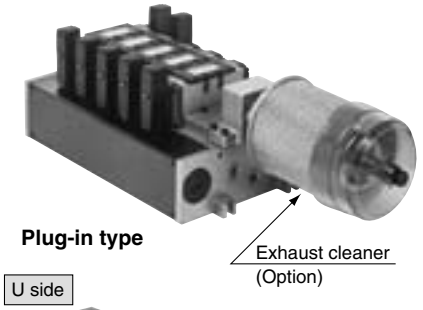

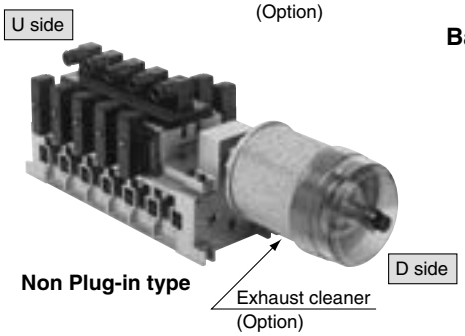

Manifold Specifications

Manifold	Plug-in type: **VV5FR5-01□(-Q)**	Non plug-in type: **VV5FR5-10(-Q)**
Wiring	With terminal block With multi-connector With D-sub connector	DIN terminal Grommet terminal
Applicable valve model	VFR5□00-□F(-Q)	VFR5□10-□D(-Q), VFR5□10-□E
Porting specifications	Common SUP/Common EXH	
	A, B port	Side: 1/2, 3/4, Bottom: 1/2 (Option)
	P port	Side: 3/4 EXH: 1 1/2
Stations	2 to 10 (1)	
Applicable exhaust cleaners	AMC810-14 (Connecting port R 1 1/2) (2)	

Note 1) With multi connector, or with D-sub connector: 8 stations max.
Note 2) Exhaust cleaner: Not attached.

How to Order

VV5FR5 - 10 □ - 06 1 - 04 □ - CD - □

Series VFR5000 Manifold

Base type/Electrical entry

01T	Plug-in type With Terminal block
01C	Plug-in type with multi-connector
01F	Plug-in type with D-sub connector
10	Non plug-in type

Connector mounting direction

Symbol	With connector	Applicable base
Nil	None	01T, 10
D	D side mounting	01C, 01F
U	U side mounting	

Stations

02	2 stations
⋮	⋮
10	10 stations

- Base 01T, 10: 2 to 10 stations
- Base 01C/01F: 2 to 8 stations

Port size

Symbol	P, EA, EB	A, B *
04	3/4	1/2
06		3/4
M		Mixed

* For bottom ported: 1/2 only.

Symbol

Symbol	Passage P	Passage EA, EB	Porting specifications (A, B)
1	Common	Common	Side
2			Bottom *

* Option

Exhaust cleaner mounting direction

Symbol	Exhaust cleaner mounting direction	
CD	D side	D side mounting
CU	U side	U side mounting

Thread type

Nil	Rc
F	G
N	NPT
T	NPTF

CE-compliant

Nil	—
Q	CE-compliant

How to Order Manifold Assembly

Instruct by specifying the valves and blanking plate to be mounted on the manifold along with the manifold base model no.

<Example> Plug-in type with terminal block: 6 stations

VV5FR5-01T-061-04-CD	**1 set (Manifold part no.)**
***VFR5100-5FZ**	**3 sets (2 position single part no.)**
***VFR5200-5FZ**	**2 sets (2 position double part no.)**
***VVFS5000-10A**	**1 set (Blanking plate assembly part no.)**
***AMC810-14**	**1 set (Exhaust cleaner part no.)**

→ The asterisk denotes the symbol for assembly. Prefix it to the part nos. of the solenoid valve, etc.

Valve arrangement is counted from the D side.
When ordering, specify the part nos. in order from the 1st. station in the D side.
When entry of part numbers becomes complicated, indicate on the manifold specification sheet.

<Example> Non plug-in type: 6 stations

VV5FR5-10-061-04-CU	**1 set (Manifold part no.)**
***VFR5110-5E**	**3 sets (2 position single part no.)**
***VFR5210-5E**	**2 sets (2 position double part no.)**
***VVFS5000-10A**	**1 set (Blanking plate assembly part no.)**
***AMC810-14**	**1 set (Exhaust cleaner part no.)**

→ The asterisk denotes the symbol for assembly. Prefix it to the part nos. of the solenoid valve, etc.

Valve arrangement is counted from the D side.
When ordering, specify the part nos. in order from the 1st. station in the D side.
When entry of part numbers becomes complicated, indicate on the manifold specification sheet.

⚠ Caution

When using exhaust cleaner, mount it downwards.

Manifold with Exhaust Cleaner: Plug-in Type/Non Plug-in Type

Plug-in type: VV5FR5-01T-Station 1-Port size-CD/CU

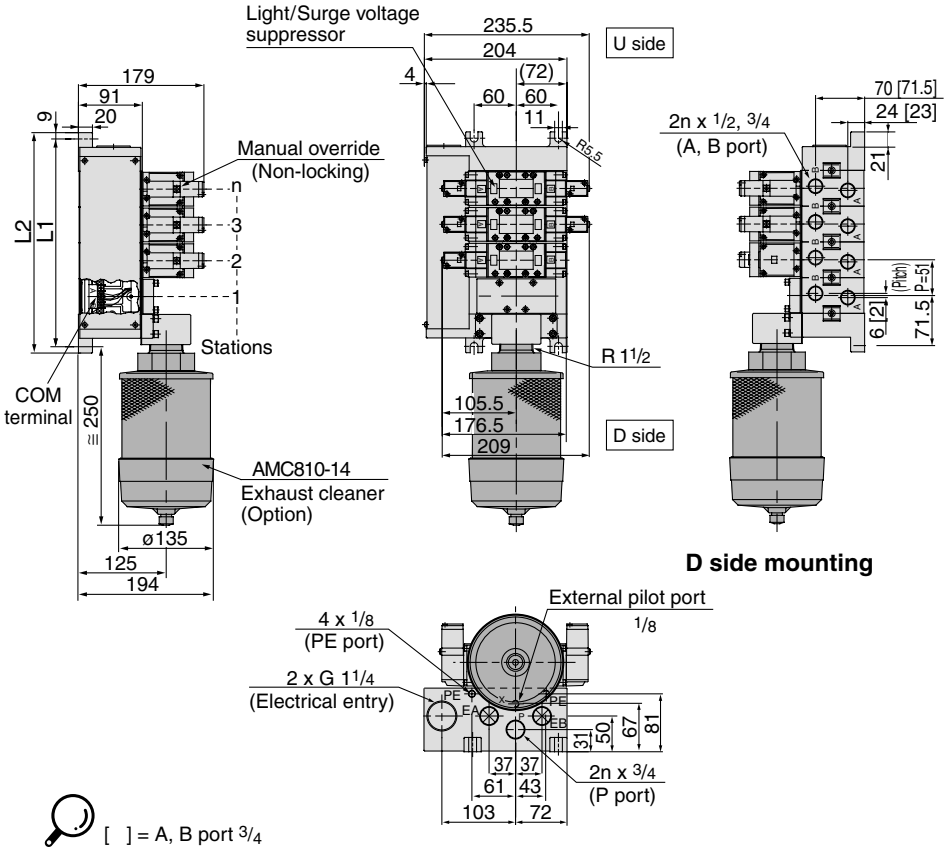

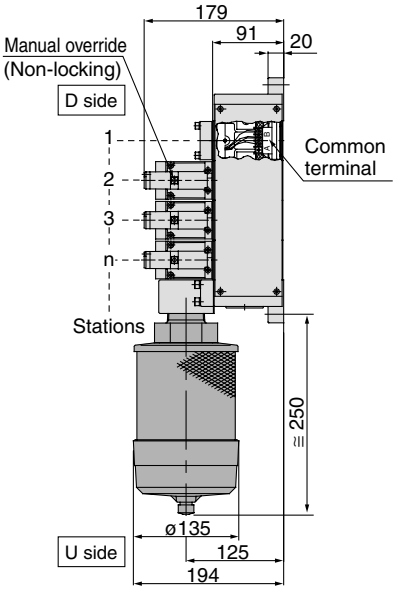

U side mounting

[ ] = A, B port 3/4

Non plug-in type: VV5FR5-10-Station 1-Port size-CD/CU

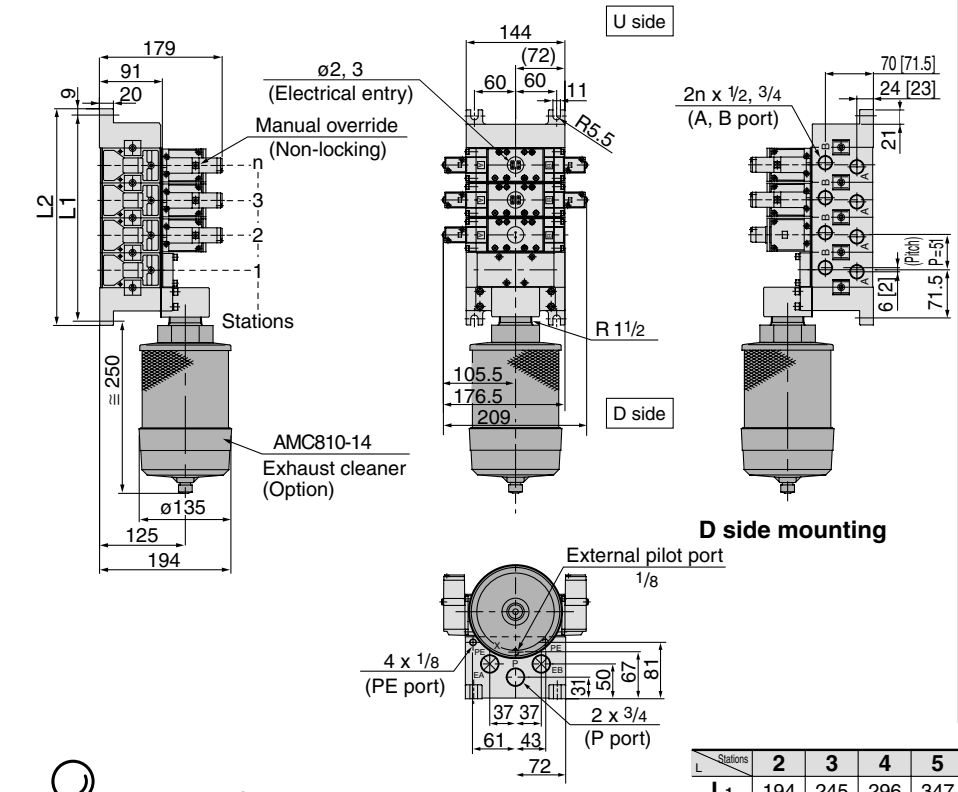

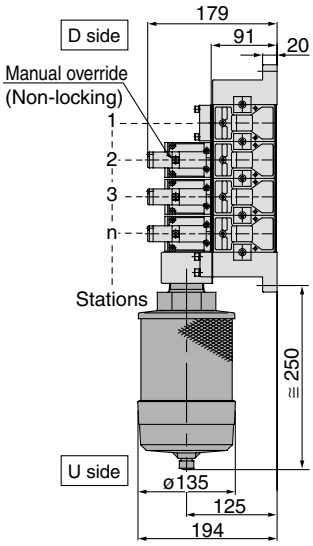

U side mounting

[ ] = A, B port 3/4

n: Stations

L \ Stations	2	3	4	5	6	7	8	9	10	Formula
L_1	194	245	296	347	398	449	500	551	602	$L_1 = 51 \times n + 92$
L_2	212	263	314	365	416	467	518	569	620	$L_2 = 51 \times n + 110$

Manifold Option Parts Assembly/Plug-in Type, Non Plug-in Type

Individual SUP spacer
VVFS5000-P-04-1 (Plug-in type)
VVFS5000-P-04-2 (Non plug-in type)

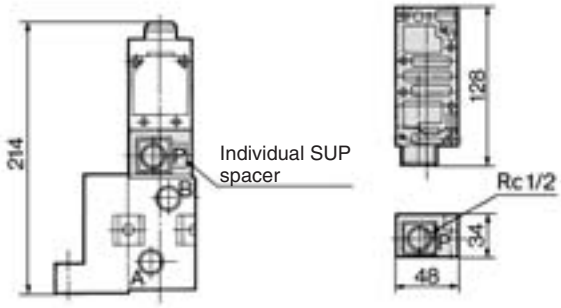

Individual EXH spacer
VVFS5000-R-04-1 (Plug-in type)
VVFS5000-R-04-2 (Non plug-in type)

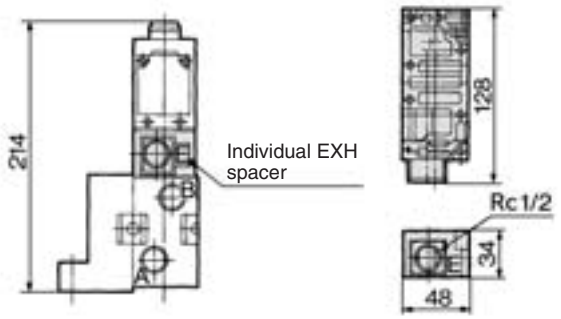

SUP block disk: AXT628-12A
EXH block disk: AXT512-14-1A

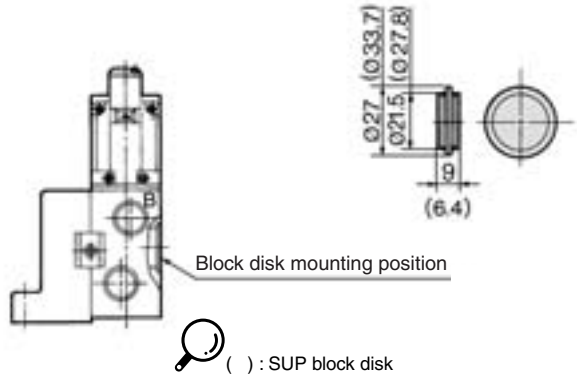

Throttle valve spacer
VVFS5000-20A-1 (Plug-in type)
VVFS5000-20A-2 (Non plug-in type)

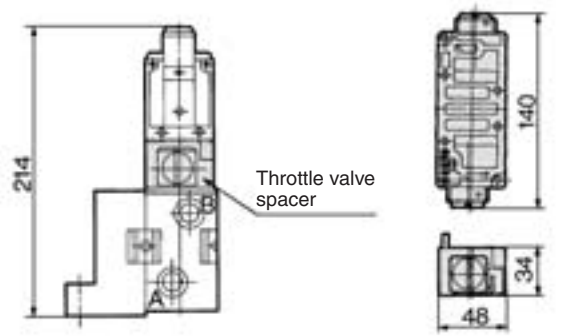

Interface regulator/P port regulation
ARBF5050-00-P-1 (Plug-in type)
ARBF5050-00-P-2 (Non plug-in type)

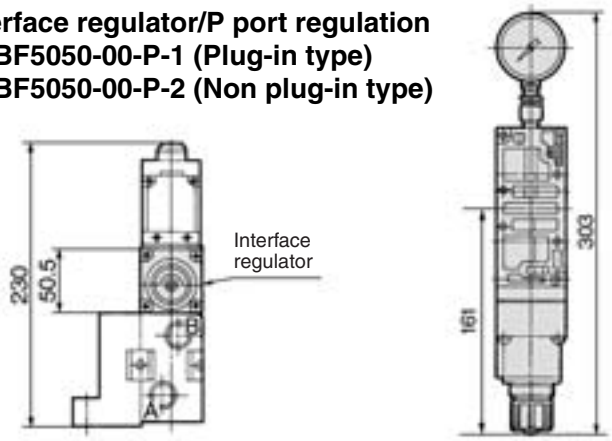

Interface regulator/A port regulation
ARBF5050-00-A-1 (Plug-in type)
ARBF5050-00-A-2 (Non plug-in type)

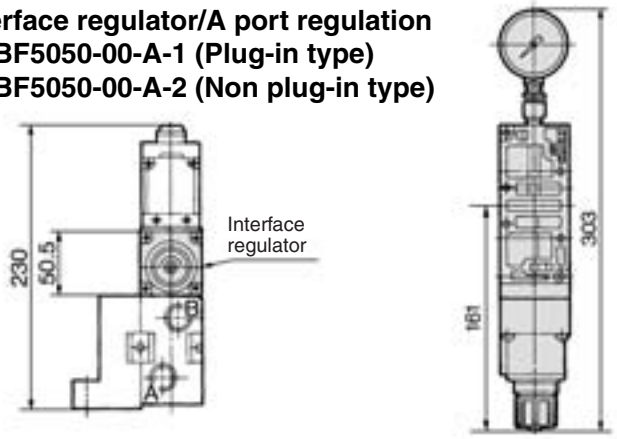

Interface regulator/B port regulation
ARBF5050-00-B-1 (Plug-in type)
ARBF5050-00-B-2 (Non plug-in type)

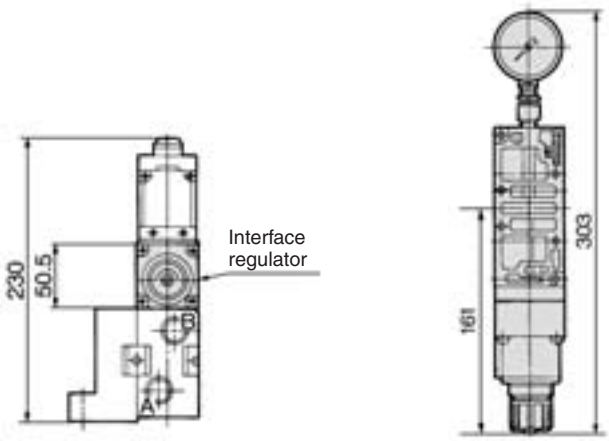

Manifold Base Construction: Plug-in Type/Non Plug-in Type

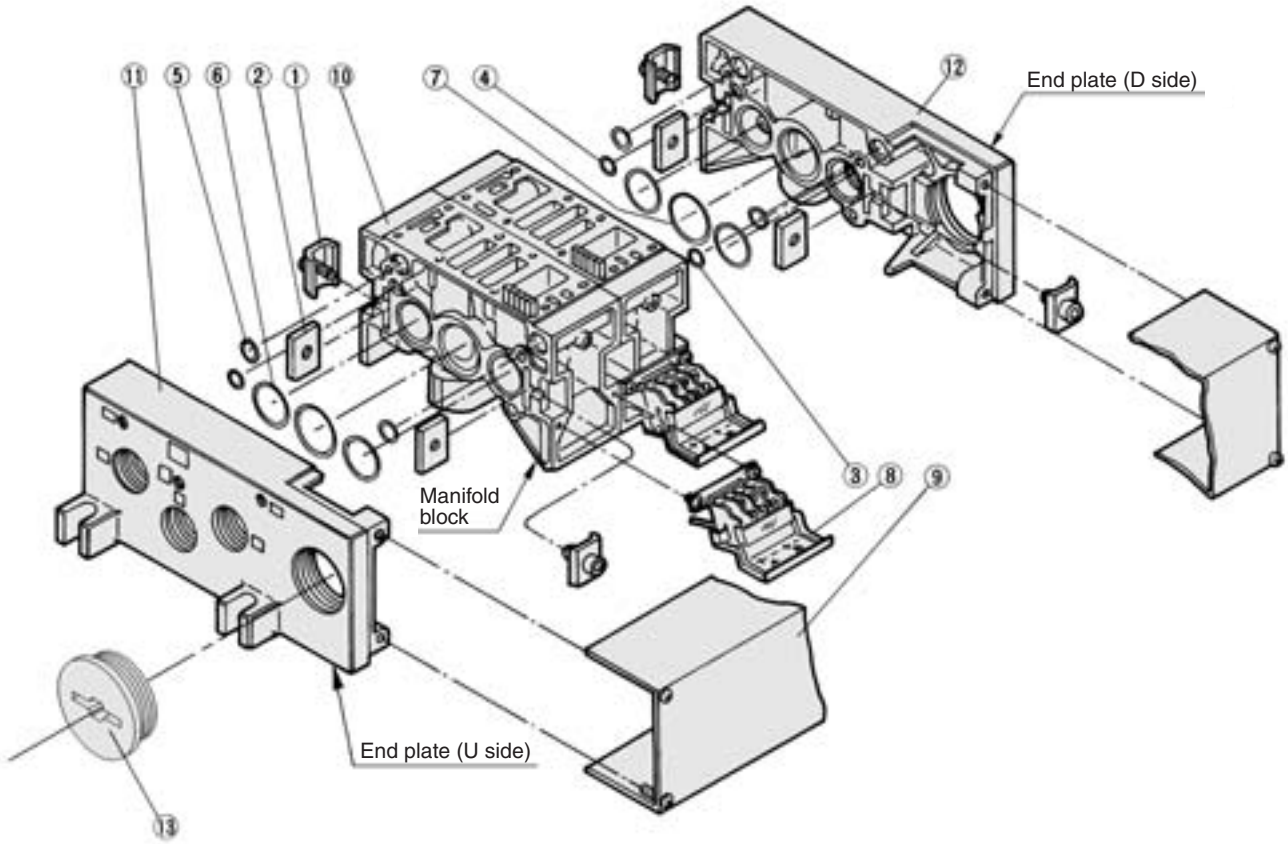

Replacement Parts

No.	Description	Material	Part no.
1	**Connection fitting A**	Steel plate	AXT628-6-1A
2	**Connection fitting B**	Steel plate	AXT628-6-2
3	**O-ring**	NBR	AS568-006
4	**O-ring**	NBR	AS568-010
5	**O-ring**	NBR	AS568-013
6	**O-ring**	NBR	AS568-022
7	**O-ring**	NBR	AS568-026
8	**Terminal block assembly**	—	VFR5000-21-1A
9	**Junction cover assembly**	For 01T	VVFS5000-4A-Stations
13	**Rubber plug**	NBR	AXT336-9

- When requiring replacement manifold stations, order replacement parts assembly no. ⑩: manifold block assembly part.
  For plug-in type: The manifold base with terminal stand (integrated with a junction cover) is required with the ⑨ junction cover assembly.

Replacement Parts: Sub Assembly

Note) Manifold Base/Construction: Plug-in type with terminal block.

No.	Description	Assembly part no.	Component parts	Applicable manifold base
10	**Manifold block assembly**	VFR5000-20-1A-$^{04}_{06}$	Manifold block ⑩, Metal joint ①, ②, Terminal block ⑧, O-ring ③, ④, ⑤, ⑥, ⑦, Receptacle assembly	Plug-in type
		VVFS5000-1A-2-$^{04}_{06}$	Manifold block ⑩, Metal joint ①, ②, O-ring ③, ④, ⑤, ⑥, ⑦	Non plug-in type
11	**End plate (U side) assembly**	VVFS5000-2A-1	End plate (U) ⑪, Metal joint ①, ②	Plug-in type
		VVFS5000-2A-2	End plate (U) ⑪, Metal joint ①, ②	Non plug-in type
12	**End plate (D side) assembly**	VVFS5000-3A-1	End plate (D) ⑫, Metal joint ①, ②, O-ring ③, ④, ⑤, ⑥, ⑦	Plug-in type
		VVFS5000-3A-2	End plate (D) ⑫, Metal joint ①, ②, O-ring ③, ④, ⑤, ⑥, ⑦	Non plug-in type

∗ Contact SMC for CE-compliant products.

5 Port Pilot Operated Solenoid Valve Rubber Seal, Plug-in/Non Plug-in

Series VFR6000

CE [Option]

Plug-in type

Non plug-in type

Standard Specifications

Valve specifications	Fluid		Air
	Operating pressure range	2 position single/3 position	0.2 to 0.9 MPa
		2 position double	0.1 to 0.9 MPa
	Ambient and fluid temperature		−10 to 50°C (No freezing. Refer to page 5.)
	Lubrication		Non-lube (1)
	Manual override		Non-locking push type
	Shock/Vibration resistance		300/50m/s² (2)
	Enclosure		Dustproof
Electricity specifications	Coil rated voltage		100, 200 VAC (50/60 Hz), 24 VDC
	Allowable voltage fluctuation		−15 to −10% of rated voltage
	Apparent power (AC) (3)	Inrush	5.6 VA/50 Hz, 5.0 VA/60 H
		Holding	3.4 VA/50 Hz, 2.3 VA/60 Hz
	Power consumption (DC) (3)		1.8 W
	Electrical entry		Plug-in type: Conduit terminal; Non plug-in type: Grommet terminal, DIN terminal

Note 1) Use turbine oil Class 1 (ISO VG32), if lubricated.
Note 2) Impact resistance: No malfunction occurred when it is tested with a drop tester in the axial direction and at the right angles to the main valve and armature in both energized and de-energized states every once for each condition. (Values at the initial period)
Vibration resistance: No malfunction occurred in a one-sweep test between 45 and 2000 Hz. Test was performed at both energized and de-energized states in the axial direction and at the right angles to the main valve and armature. (Values at the initial period)
Note 3) At rated voltage

Option Specifications

Main valve manual override	Direct manual override
Coil rated voltage	110 to 120, 220, 240 VAC 50/60 Hz
	12 VDC
Option	With light/surge voltage suppressor

JIS Symbol

2 position	3 position
Single	Closed center
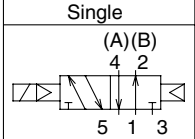	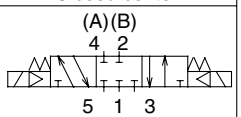
Double	Exhaust center
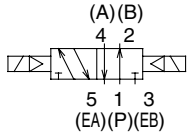	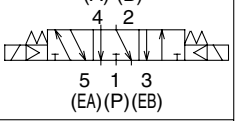
	Pressure center
	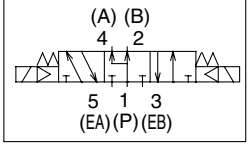

Model

Type of actuation		Model: Plug-in	Model: Non plug-in	Port size	Flow characteristics (1) 1 → 4/2 (P → A/B) C [dm³/(s·bar)]	b	Cv	4/2 → 5/3 (A/B → EA/EB) C [dm³/(s·bar)]	b	Cv	Max. operating cycle (Hz) (2)	Response time (ms) (3)	Mass (kg) (4)
2 position	Single	VFR610□	VFR611□	3/4	40	0.12	9.1	41	0.15	9.6	2	100 or less	4.73 (4.56)
2 position	Double	VFR620□	VFR621□	3/4	40	0.14	9.2	41	0.17	9.7	2	100 or less	4.78 (4.61)
3 position	Closed center	VFR630□	VFR631□	3/4	39	0.17	9.3	39	0.15	9.3	1	150 or less	4.72 (4.55)
3 position	Exhaust center	VFR640□	VFR641□	3/4	38	0.14	8.9	42 [40]	0.12 [0.15]	9.6 [9.4]	1	150 or less	4.72 (4.55)
3 position	Pressure center	VFR650□	VFR651□	3/4	38 [20]	0.10 [0.44]	8.7 [5.7]	40	0.16	9.3	1	150 or less	4.72 (4.55)

Type of actuation		Model: Plug-in	Model: Non plug-in	Port size	Effective area (mm²)
2 position	Single	VFR610□	VFR611□	1	191
2 position	Double	VFR620□	VFR621□	1	191
3 position	Closed center	VFR630□	VFR631□	1	180
3 position	Exhaust center	VFR640□	VFR641□	1	P → A, B: 178 A, B → EA, EB: 212 Normal position: 193
3 position	Pressure center	VFR650□	VFR651□	1	P → A, B: 183 Normal position: 82 A, B → EA, EB: 199

Note 1) [ ]: Denotes the normal position.
Note 2) Min. operating frequency is once in 30 days.
Note 3) Based on dynamic performance test, JIS B 8375-1981. (Coil temperature: 20°C, at rated voltage, without surge voltage suppressor)
Note 4) For VFR6□00-□FZ-06, ( ): VFR6□10-□DZ-06

⚠ Caution

When double solenoid is used, spool valve should be mounted horizontally.
If there are vibrations, spool valve should be mounted perpendicular to the vibration direction.

How to Order

Electrical entry

F: Plug-in type, conduit type

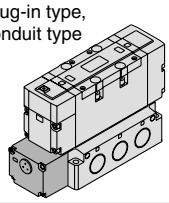

Option

Nil	None
Z	With light/surge voltage suppressor

Port size

Nil	Without sub-plate
06	3/4
10	1

Plug-in VFR6 [ ] 0 [0] – [5] F [ ] – [10] [ ] – [ ]

Non plug-in VFR6 [ ] 1 [1] – [1] [D] [ ] – [10] [ ] – [ ]

Symbol

1	2 position single (A)(B) 4 2 / 5 1 3 (EA)(P)(EB)
2	2 position double (A)(B) 4 2 / 5 1 3 (EA)(P)(EB)
3	3 position closed center (A)(B) 4 2 / 5 1 3 (EA)(P)(EB)
4	3 position exhaust center (A)(B) 4 2 / 5 1 3 (EA)(P)(EB)
5	3 position pressure center (A) (B) 4 2 / 5 1 3 (EA)(P)(EB)

Body option

0	Standard
1 *	Direct manual override

* Option

Coil rated voltage

1	100 VAC, 50/60 Hz
2	200 VAC, 50/60 Hz
3 *	110 to 120 VAC, 50/60 Hz
4 *	220 VAC, 50/60 Hz
5	24 VDC
6 *	12 VDC
7 *	240 VAC, 50/60 Hz
9 *	Other

* Option

Electrical entry

E: Grommet terminal

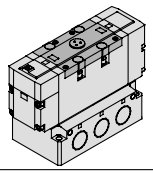

D: DIN terminal

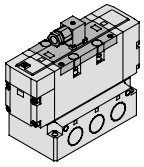

Thread type

Nil	Rc
F	G
N	NPT
T	NPTF

CE-compliant

Nil	—
Q	CE-compliant *

* Electrical entry: D and F only

How to Order Pilot Valve Assembly

SF4 – [1] F – 22 – [ ]

Coil rated voltage

Symbol	Rated voltage
1	100 VAC, 50/60 Hz
2	200 VAC, 50/60 Hz
3 *	110 to 120 VAC, 50/60 Hz
4 *	220 VAC, 50/60 Hz
5	24 VDC
6 *	12 VDC
7 *	240 VAC, 50/60 Hz
9 *	Other

* Option

CE-compliant

Nil	—
Q	CE-compliant

Cylinder Speed Chart

Use as a guide for selection.
Please confirm the actual conditions with SMC Sizing Program.

Series	Average speed (mm/s)	Bore size						
		Series CS1/CS2 Pressure 0.5 MPa Load factor 50% Stroke 300 mm						
		ø125	ø140	ø160	ø180	ø200	ø250	ø300
VFR6100-10	800 700 600 500 400 300 200 100 0	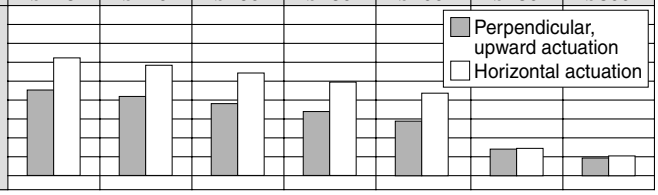						

∗ It is when the cylinder is extending that is meter-out controlled by speed controller which is directly connected with cylinder, and its needle valve with being fully open.
∗ The average velocity of the cylinder is what the stroke is divided by the total stroke time.
∗ Load factor: ((Load weight x 9.8)/Theoretical force) x 100%

Conditions

		Series CS1/CS2
VFR6110-10	Tube x Length	SGP25A x 1 m
	Speed controller	AS600-10
	Silencer	AN600-10

How to Order Sub-plate Assembly

Plug-in **VFR6000 − P − 10 □**

Non plug-in **VFS6000 − S − 10 □**

Note) • Not applicable for external pilot.
• Not applicable for bottom ported.
• Mounting bolt and gasket are not included.

Piping port (P, A, B, EA, EB port)

06	3/4
10	1

Thread type

Nil	Rc
F	G
N	NPT
T	NPTF

Construction

2 position single

VFR61□0

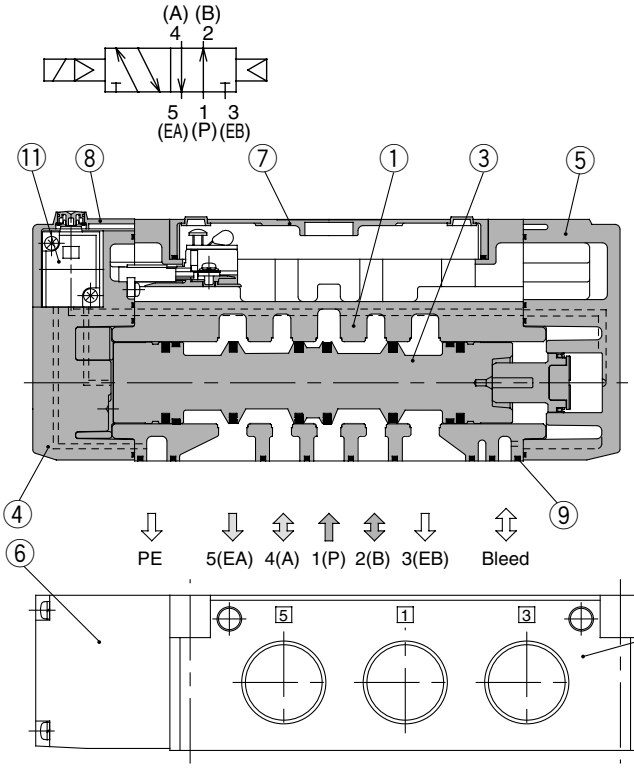

2 position double

VFR62□0

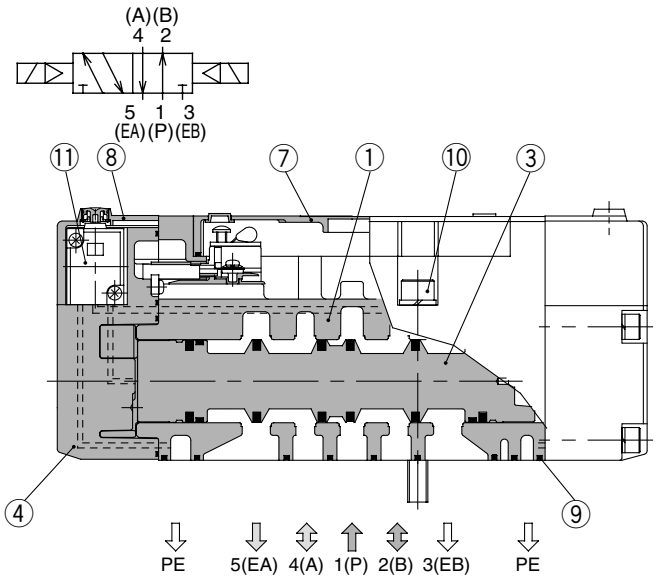

3 position closed center/exhaust center/pressure center

Closed center: VFR63□0

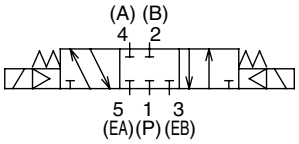

Exhaust center: VFR64□0

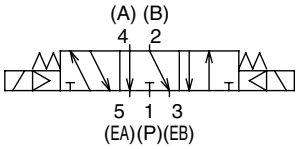

Pressure center: VFR65□0

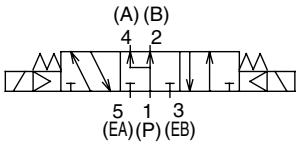

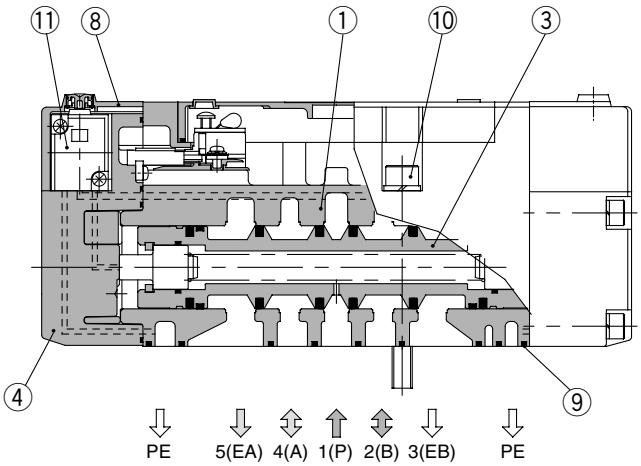

This figure shows a closed center type.

Component Parts

No.	Description	Material	Note
1	**Body**	Aluminum die-casted	Platinum silver
2	**Sub-plate**	Aluminum die-casted	Platinum silver
3	**Spool valve**	Aluminum, NBR	
4	**Adapter plate**	Aluminum die-casted	Black

Component Parts

No.	Description	Material	Note
5	**End plate**	Aluminum die-casted	Black
6	**Junction cover**	Resin	Black
7	**Light cover**	Resin	
8	**Pilot valve cover**	Resin	Black

Replacement Parts

No.	Description	Material	Part no.		
			VFR61□□	**VFR62□□**	**VFR63□□/64□□/65□□**
9	**Gasket**	NBR	VFS6000-15	VFS6000-15	VFS6000-15
10	**Hexagon socket head screw**	Steel	M8 x 80	M8 x 80	M8 x 80
11	**Pilot valve assembly**	—	Refer to “How to Order Pilot Valve Assembly” on page 1313.		

Plug-in: 2 Position Single/Double, 3 Position Closed Center/Exhaust Center/Pressure Center

2 position single: VFR610$^{0}_{1}$-□F(Z)

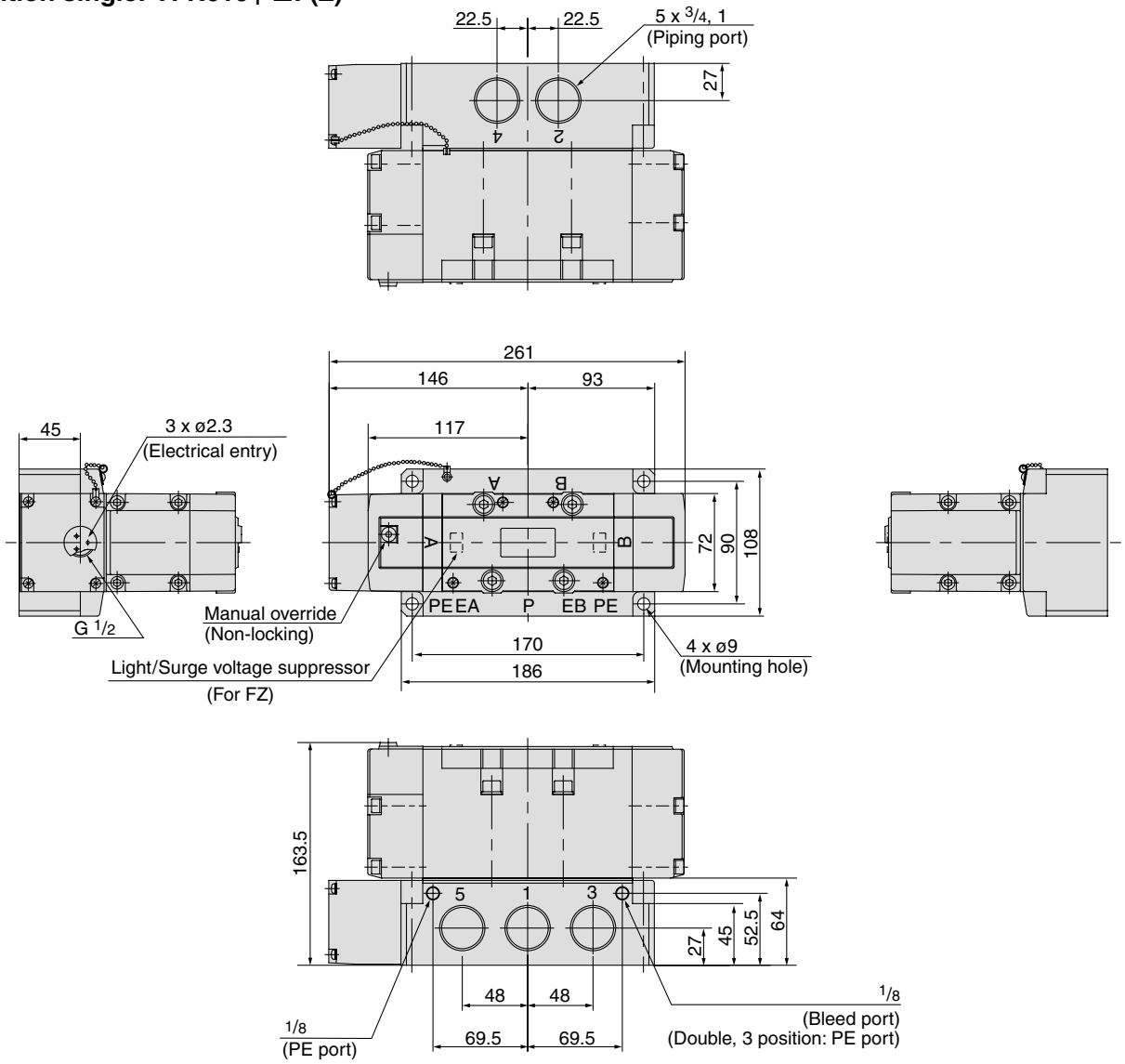

2 position double: VFR620$^{0}_{1}$-□F(Z)

3 position closed center: VFR630$^{0}_{1}$-□F(Z)
3 position exhaust center: VFR640$^{0}_{1}$-□F(Z)
3 position pressure center: VFR650$^{0}_{1}$-□F(Z)

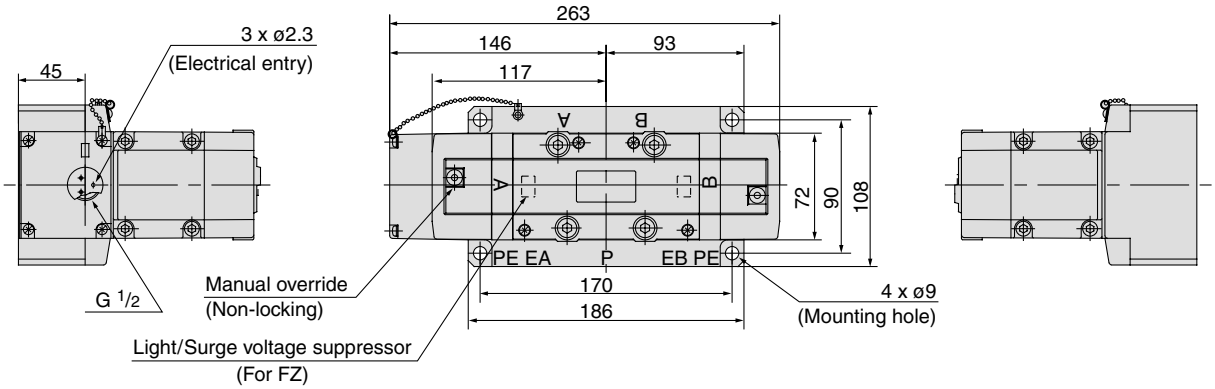

∗ Other dimensions are the same as the single type.

Non Plug-in: 2 Position Single/Double, 3 Position Closed Center/Exhaust Center/Pressure Center

2 position single: VFR611$^{0}_{1}$-□E, VFR611$^{0}_{1}$-□D(Z)

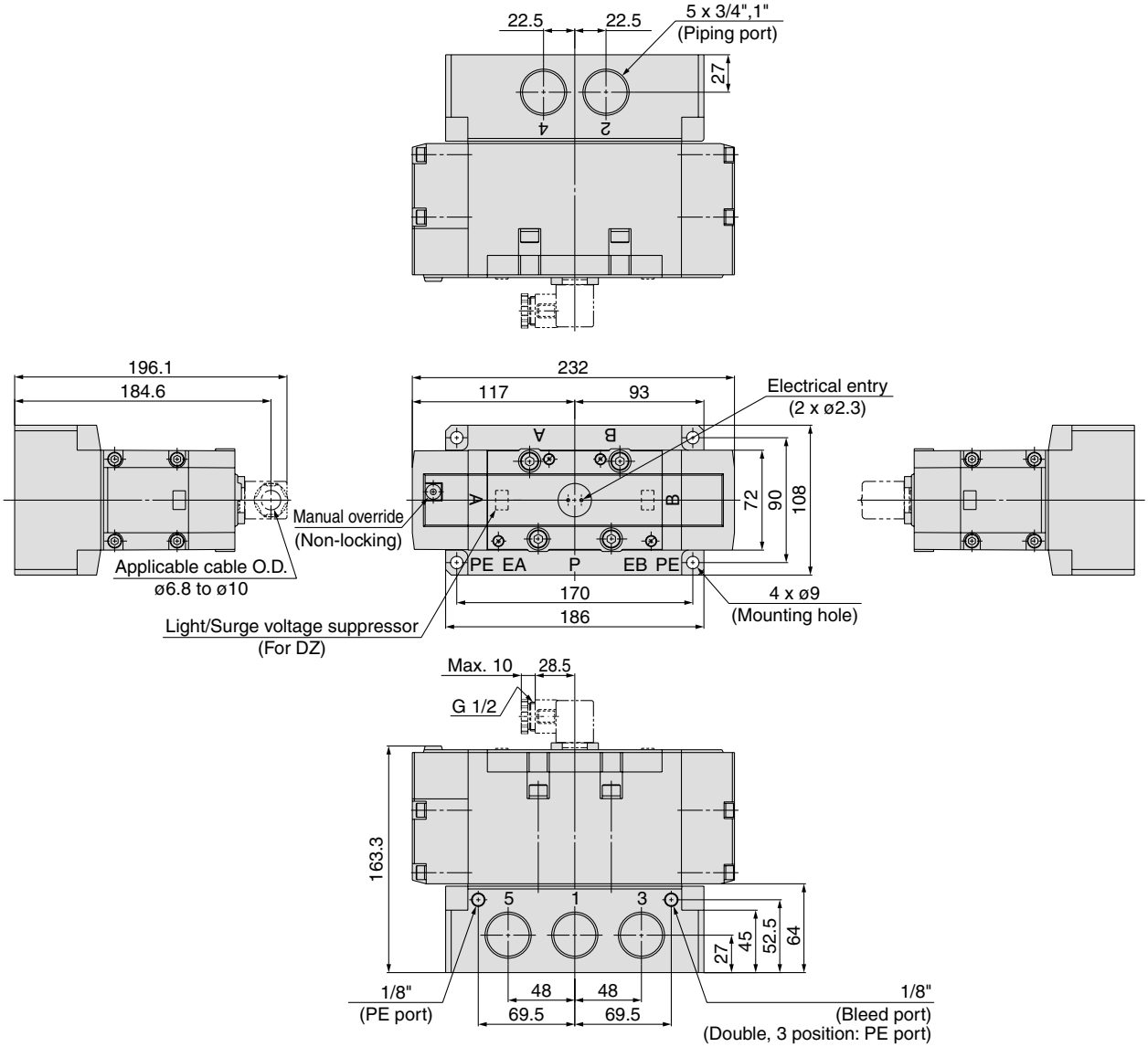

2 position double: VFR621$^{0}_{1}$-□E, VFR621$^{0}_{1}$-□D(Z)

3 position closed center: VFR631$^{0}_{1}$-□E, VFR631$^{0}_{1}$-□D(Z)
3 position exhaust center: VFR641$^{0}_{1}$-□E, VFR641$^{0}_{1}$-□D(Z)
3 position pressure center: VFR651$^{0}_{1}$-□E, VFR651$^{0}_{1}$-□D(Z)

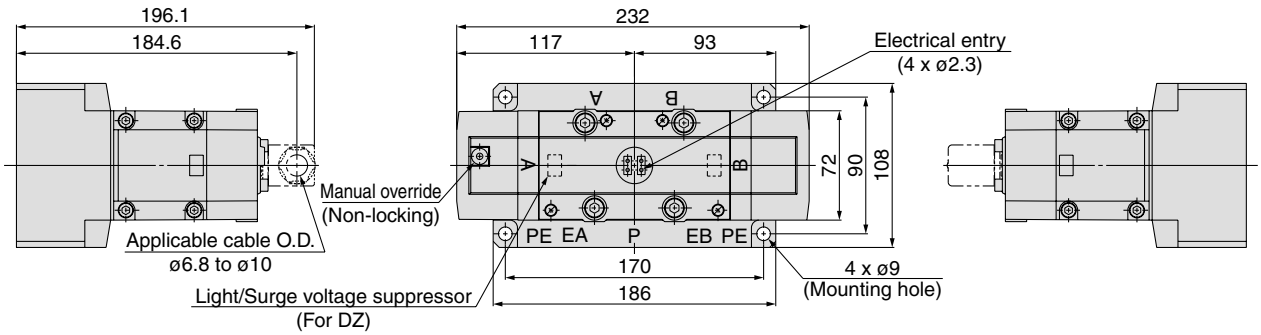

∗ Other dimensions are the same as the single type.

5 Port Pilot Operated Solenoid Valve
Rubber Seal, Non Plug-in
Series VFR2000

NRTL /C

Non plug-in type

How to Order

Non plug-in **30 – VFR2 1 10 □ – 1 D □ □ – □ 02 □**

Conforming to CSA standard

Symbol

1	2 position single 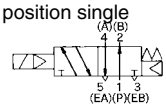
2	2 position double 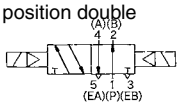
3	3 position closed center 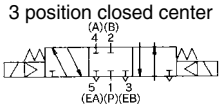
4	3 position exhaust center 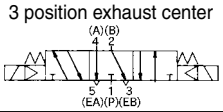
5	3 position pressure center 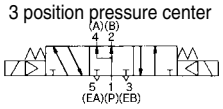

Pilot type

Nil	Internal pilot
R *	External pilot

* Option (External pilot is available only on sub-plate type.)

Coil rated voltage

1	100 VAC, 50/60 Hz
2	200 VAC, 50/60 Hz
3 *	110 to 120 VAC, 50/60 Hz
4 *	220 VAC, 50/60 Hz
5	24 VDC
6 *	12 VDC
7 *	240 VAC, 50/60 Hz

* Option

Piping (P, A, B, EA, EB port)

Nil	Side ported

* Option

Port size (P, A, B port)

Nil	Without sub-plate
01	1/8
02	1/4

EA, EB port: 1/8

Pilot valve manual override

Nil: Non-locking push type	**B***: Locking type B (Tool required)
A*: Non-looking push type A (Extended)	**C***: Locking type C (Lever)

* Option

Option

Nil	None
Z	With light/surge voltage suppressor

Electrical entry

D: DIN terminal

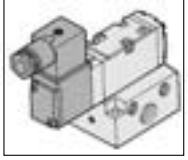

⚠ Refer to the standard product for product specifications, dimensions and model selection procedures.

5 Port Pilot Operated Solenoid Valve
Rubber Seal, Non Plug-in
Series VFR3000

NRTL /C

How to Order

Non plug-in **30** – **VFR3** [1] **4** [0] [ ] – [1] [D] [ ] [ ] – [ ] [02] [ ] **Individual electrical entry**

Conforming to CSA standard

Symbol

1	2 position single
2	2 position double
3	3 position closed center 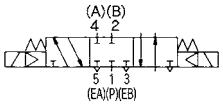
4	3 position exhaust center
5	3 position pressure center

Body option

0	Standard

Pilot type

Nil	Internal pilot
R *	External pilot

* Option

Coil rated voltage

1	100 VAC, 50/60 Hz
2	200 VAC, 50/60 Hz
3 *	110 to 120 VAC, 50/60 Hz
4 *	220 VAC, 50/60 Hz
5	24 VDC
6 *	12 VDC
7 *	240 VAC, 50/60 Hz

* Option

Piping (P, A, B, EA, EB port)

Nil	Side ported
B *	Bottom ported

* Option

Port size (P, A, B, EA, EB port)

Nil	Without sub-plate
02	1/4
03	3/8

* For bottom ported: 1/4

Thread type

Nil	Rc
N	NPT
T	NPTF
F	G

Pilot valve manual override

Nil: Non-locking push type	**B***: Locking type B (Tool required)
A*: Non-looking push type A (Extended)	**C***: Locking type C (Lever)

* Option

Option

Nil	None
Z	With light/surge voltage suppressor

Electrical entry

D: DIN terminal

⚠ Refer to the standard product for product specifications, dimensions and model selection procedures.

5 Port Pilot Operated Solenoid Valve
Rubber Seal, Non Plug-in
Series VFR4000

NRTL /C

How to Order

Non plug-in **30** – **VFR4** [ ] **4** **0** [ ] – **1** **D** [ ] [ ] – [ ] **03** [ ] **Individual electrical entry**

Conforming to CSA standard

Symbol

1	2 position single
2	2 position double
3	3 position closed center 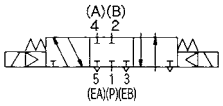
4	3 position exhaust center
5	3 position pressure center

Body option

0	Standard
1 *	Direct manual override

* Option

Pilot type

Nil	Internal pilot
R *	External pilot

* Option

Coil rated voltage

1	100 VAC, 50/60 Hz
2	200 VAC, 50/60 Hz
3 *	110 to 120 VAC, 50/60 Hz
4 *	220 VAC, 50/60 Hz
5	24 VDC
6 *	12 VDC
7 *	240 VAC, 50/60 Hz

* Option

Piping (P, A, B, EA, EB port)

Nil	Side ported
B *	Bottom ported

* Option: Bottom ported is not available for external pilot.

Port size (P, A, B port)

Nil	Without sub-plate
03	3/8
04 *	1/2

EA, EB port: 3/8

Pilot valve manual override

Nil: Non-locking push type	**B***: Locking type B (Tool required)
A*: Non-looking push type A (Extended)	**C***: Locking type C (Lever)

* Option

Option

Nil	None
Z	With light/surge voltage suppressor

Electrical entry

D: DIN terminal

Thread type

Nil	Rc
N	NPT
T	NPTF
F	G

⚠ Refer to the standard product for product specifications, dimensions and model selection procedures.

Series VFR2000/3000/4000/5000/6000
Specific Product Precautions 1

Be sure to read before handling. Refer to front matters 58 and 59 for Safety Instructions Instructions and pages 3 to 7 for 3/4/5 Port Solenoid Valve Precautions.

⚠ Caution

Lead Wire Connection

Plug-in type (With terminal block)

Series VFR2000/3000/4000

- If you remove the junction cover ① on the sub-plate, you will see the plug-in terminal block ② attached to the inside of sub-plate.

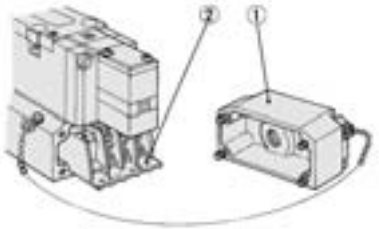

- The following markings are on the terminal block. Connect with corresponding power side.

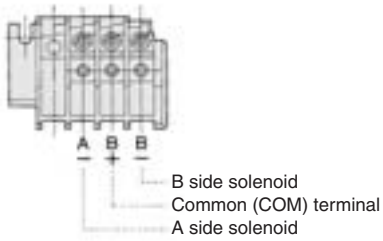

- Although "A–", "B+" and "B–" marks are indicated on the terminal block, this can be used as either "+COM" or "–COM".
- Applicable terminal:
  VFR2000, VFR3000: 1.25-3, 1.25-3S, 1.25Y-3N, 1.25Y-3S
  VFR4000: 1.25-3.5M, 1.25Y-3L, 1.25Y-3M

Series VFR5000

- Remove junction cover for sub-plate ①, depress levers ③ of terminal block assembly ②, pull out terminal block assembly.

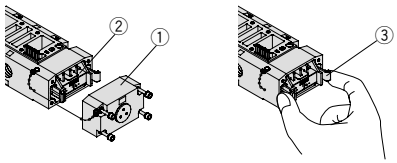

- Terminal block assembly is marked as below. Connect it to power supply side.

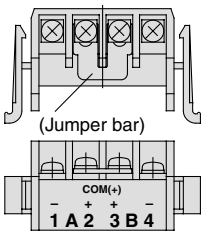

Model \ Terminal block marking	A– (1)	B+ (3)	B– (4)
VFR510□	A side	COM	
VFR520□	A side	COM	B side
VFR$^{3}_{5}$40□	A side	COM	B side

- Terminal block assembly can be used as "+" and "–" common regardless of markings. Do not remove jumper bar because it is used for common connection.
- Applicable terminal:
  1.25-4, 1.25-4M

Series VFR6000

- If you remove the junction cover ① on the sub-plate, you will see the plug-in terminal block ② attached to the inside of sub-plate.

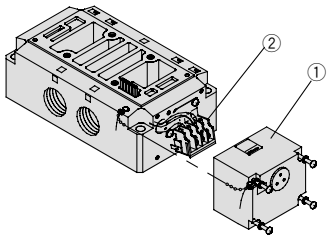

- Terminal block assembly is wired like the following figure. Connect it to each power supply side.

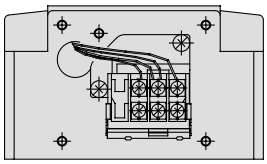

Model \ Position	Left	Center	Right
VFR610□	A side	COM	
VFR620□	A side	COM	B side
VFR$^{3}_{5}$40□	A side	COM	B side

- Can be used as either "+COM" or "–COM".
- Applicable terminal:
  1.25-4, 1.25-4M

Non plug-in type

Series VFR2000
Series VFR3000/4000 (VFR3□40/4□40)

- Type G: Lead wire comes directly from the solenoid part. Connect it with the power source. Grommet with DC voltage surge voltage suppressor has polarity. Connect red lead wire to + (positive) side and black to – (negative) side.

Surge voltage suppressor	
DC	AC
Red (+) / Black (–)	Varistor

- Type E, T, D, Y: In the case of DIN terminal block and terminal block, there is no polarity of positive [+] and negative [–]. Connect no. 1 and no. 2 terminals with corresponding power side.

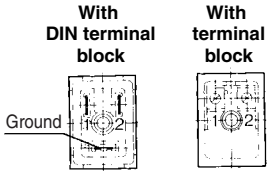

- Applicable cable O.D.
  Type T: ø6 to ø8 mm
  Type E: ø2.3 to ø2.8 mm
  Type D (Series VFR2000): ø6 to ø8 mm
  Type D (Series VFR3000/4000): ø4.5 to ø7 mm
  Type Y: ø4.5 to ø7 mm
- Applicable crimp terminal
  Type E, T: 1.25-3, 1.25-3S, 1.25Y-3N, 1.25Y-3S
  (Round shape or Y shape crimp terminal cannot be used for Type D.)

Series VFR3000/4000/5000/6000 (VFR3□10/4□10)

DIN terminal block type

- Male pin terminal of DIN terminal block of solenoid valves are wired as shown below. Connect to corresponding terminal on the connector.

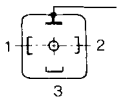

Terminal no.	Internal wiring
1	SOL. A side
2	SOL. B side
3	COM
⏚	Ground

- Can be used as either "+COM" or "–COM".
- Applicable cable
  Cross section of the wire: 0.5 to 1.5 mm²
  Cable O.D.: ø8 to ø10
- Applicable crimp terminal shown below.

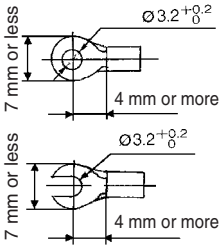

- Proper tightening torque of the connector
  Connector set screw 0.5 to 0.6 N·m
  Terminal screw 0.5 to 0.6 N·m
- Incorrect connection of "COM terminal" (DIN terminal no. 3) can cause damage on power source circuit.

Terminal block type

- Remove cover ①, over terminal block ② attached to the inside of body. Connect with corresponding power side. For a style with light and surge voltage suppressor, straightly pull out the light and surge voltage suppressor substrate ③ and then connect them.

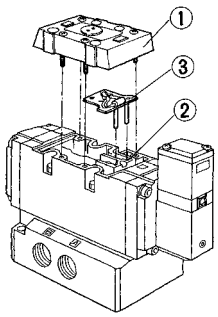

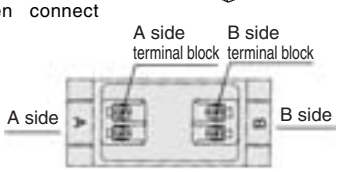

- Applicable terminal:
  VFR3000: 1.25-3, 1.25-3S, 1.25Y-3N, 1.25Y-3S
  VFR4000: 1.25-3.5M, 1.25Y-3L, 1.25Y-3M
  VFR5000/6000: 1.25-3.5M, 1.25-3L, 1.25-3M

Series VFR2000/3000/4000/5000/6000
Specific Product Precautions 2

Be sure to read before handling. Refer to front matters 58 and 59 for Safety Instructions Instructions and pages 3 to 7 for 3/4/5 Port Solenoid Valve Precautions.

⚠ Caution

Attaching and Detaching Connectors

1. To attach a connector, hold the lever and connector unit between your fingers and insert straight onto the pins of the solenoid valve so that the lever's pawl is pushed into the groove and locks.
2. To detach a connector, remove the pawl from the groove by pushing the lever downward with your thumb, and pull the connector straight out.

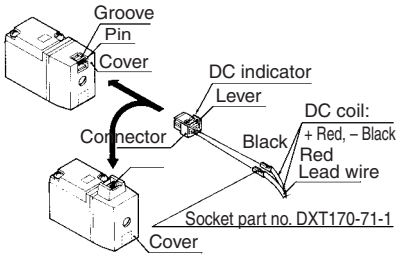

Attaching and Detaching Lead Wires with Sockets

Peel 3.2 to 3.7 mm of the tip of lead wire, enter the core wires neatly into a socket and crimp it with a special crimp tool. Be careful so that the cover of lead wire does not enter into the crimping part.

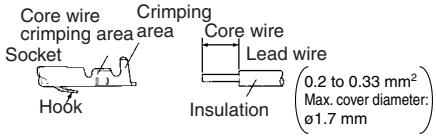

Attaching and Detaching Lead Wires with Sockets

1. Attaching

Insert the sockets into the square holes of the connector (with + and – indication) and, continue to push the sockets all the way in until the lock by hooking into the seats in the connector. (When they are pushed in, their hooks open and they are locked automatically.) Then confirm that they are locked by pulling lightly on the lead wires.

2. Detaching

To detach a socket from a connector, pull out the lead wire while pressing the socket's hook with a stick having a thin tip (approx. 1 mm). If the socket will be used again, first spread the hook outward.

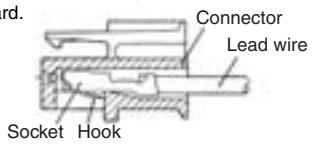

Light/Surge Voltage Suppressor

Refer to table 1 for "Series VFR2000 Plug-in type", "VFR3□⁰₁0, VFR4□⁰₁0 type of Series VFR3000/4000" and "VFR5000/6000", and table 2 for "Series VFR2000 Non plug-in type" and "VFR3□40, VFR4□40 type of Series VFR3000/4000".

Series VFR2000

Plug-in type (VFR2□00)

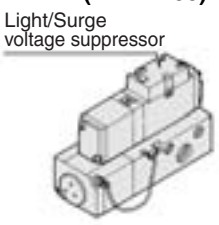

Non plug-in type (VFR2□10)

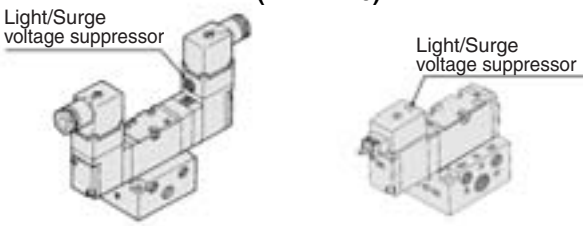

Series VFR3000, 4000

Plug-in type (VFR3□00/4□00)

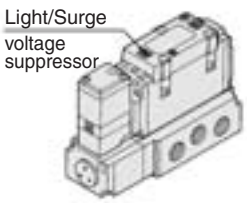

Non plug-in type (VFR3□10/4□10)

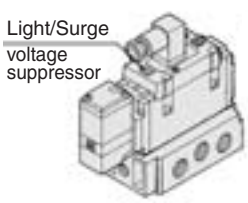

Non plug-in type (VFR3□40/4□40)

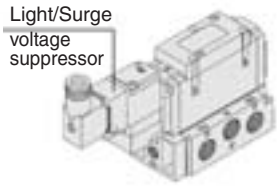

Series VFR5000/6000

Plug-in type (VFR5□00/6□00)

Non plug-in type (VFR5□10/6□10)

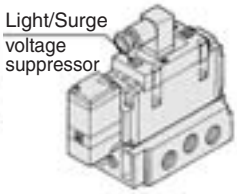

Table (1) Series VFR2000 (VFR2□00)
Series VFR3000/4000 (VFR3□⁰₁0/4□⁰₁0)
Series VFR5000/6000

Voltage		Light/Surge voltage suppressor
AC	Single solenoid	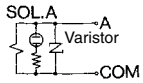
	Double solenoid	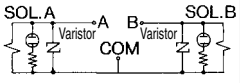
24 VDC or less	Single solenoid	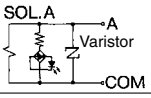
	Double solenoid	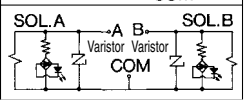

Table (2) Series VFR2000 (VFR2□10)
Series VFR3000/4000 (VFR3□⁰₁40/4□⁰₁40)

Voltage	Light/Surge voltage suppressor
AC	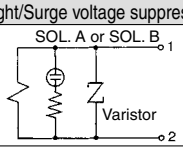
24 VDC or less	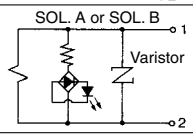

∗ Light/Surge voltage suppressor is not available for grommet type.
For grommet type with surge voltage suppressor, refer to page 1321.

Plug Connector Lead Wire Length

Standard length is 300 mm, but the following lengths are also available.

How to Order Connector Assembly

DXT170 - 80 - □ A - □

• Lead wire color

Symbol	Lead wire with socket	Note
Nil	Sockets (2 pcs.) only	Without lead wire
1	Blue (2 pcs.)	For 100 VAC
2	Red (2 pcs.)	For 200 V AC
3	Gray (2 pcs.)	Other VAC
4	Red: + Black: –	For DC

• Lead wire length

Symbol	Lead wire length (L mm)
Nil	300
6	600
10	1000
15	1500
20	2000
25	2500
30	3000

How to Order

Include the connector assembly part number together with the part number for the plug connector's solenoid valve without a connector.

<Example> For lead wire length 2000 mm
VFR2210-5MO-02 ····· 3 pcs.
DXT170-80-4A-20 ····· 6 pcs.

Series VFR2000/3000/4000/5000/6000
Specific Product Precautions 3

Be sure to read before handling. Refer to front matters 58 and 59 for Safety Instructions Instructions and pages 3 to 7 for 3/4/5 Port Solenoid Valve Precautions.

⚠ Caution

Used as a 3 Port Valve

Plugging one of the cylinder ports (A or B) enables use as a normally closed (N.C.) or normally open (N.O.) 3 port valve.
It is convenient when 3 port valve is needed on a manifold, etc., but it can't be used in special applications such as using as a non-leakage valve. Use it with the exhaust port leaving open.

Plug		B port	A port
Type of actuation		N.C.	N.O.
Number of solenoids	Single	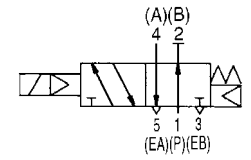	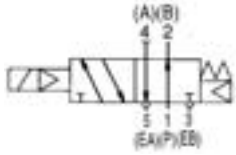
	Double	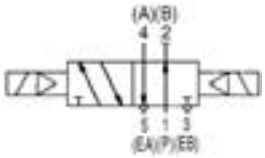	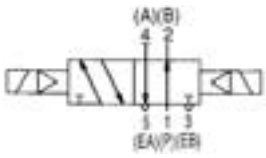

Change Direction of DIN Connector/Cable Entry

- Unscrew retaining screw, pull off outer cover, rotate connector block through 180°. Replace cover and tighten screw.

How to Calculate the Flow Rate

For obtaining the flow rate, refer to front matter 44 to 47.

How to Exchange Solenoid Valves, Pilot Valve Assemblies

How to exchange solenoid valves

- Loosen set screw and take solenoid valve out vertically, otherwise it may cause damage to the solenoid valve. Never remove valve at an angle.
- When mounting solenoid valve on to the base, plug pin assembly (base-side) into receptacle assembly (body-side) vertically.

Tightening Torque for Mounting Bolt

Model	Thread	Tightening torque
Pilot valve assembly	M3 (2 pcs.)	0.6 N·m
VFR2000	M3 (3 pcs.)	0.9 N·m
VFR3000	M3 (3 pcs.)	1.1 N·m
VFR4000	M4 (4 pcs.)	1.4 N·m
VFR5000	M5 (4 pcs.)	2.8 N·m
VFR6000	M8 (4 pcs.)	16 N·m

Note) For more information about the procedure, refer to the instruction manual.

Series VFR2000

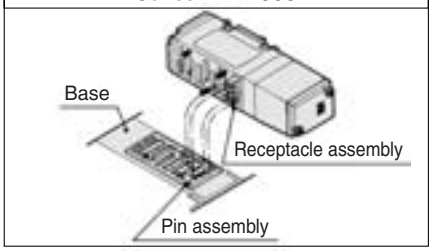

Series VFR3000/4000/5000

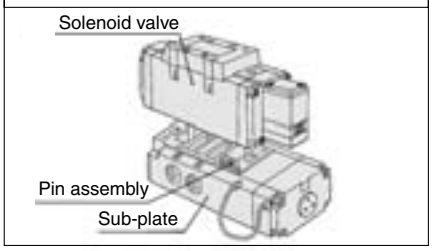

Series VFR6000

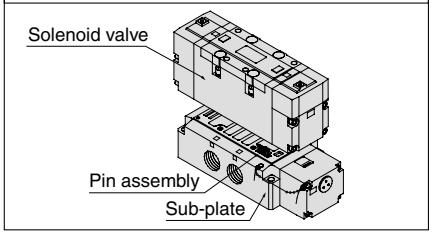

How to exchange pilot valve assemblies

- Possible to exchange pilot valve assemblies like the following figures.

Note) Do not change the rated voltage.

Series VFR2000

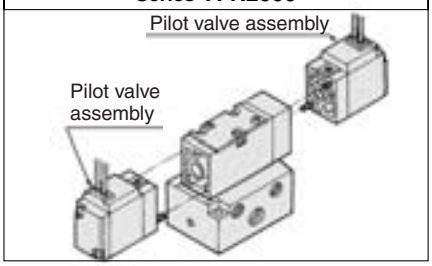

Series VFR3000/4000/5000

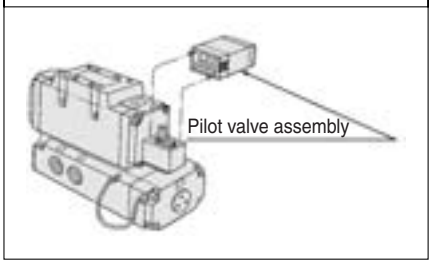

Series VFR6000

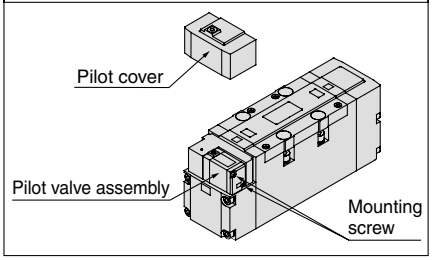

Series VFR2000/3000/4000/5000/6000
Specific Product Precautions 4

Be sure to read before handling. Refer to front matters 58 and 59 for Safety Instructions Instructions and pages 3 to 7 for 3/4/5 Port Solenoid Valve Precautions.

Interface Regulator

⚠ Caution

Specifications

Interface regulator		ARBF2000	ARBF3050			ARBF4050			ARBF5050		
Applicable solenoid valve series		VFR2000	VFR3000			VFR4000			VFR5000		
Regulating port		P	A	B	P	A	B	P	A	B	P
Maximum operating pressure		1.0 MPa (1)									
Set pressure range		0.05 to 0.83 MPa	0.1 to 0.83 MPa (2)								
Ambient and fluid temperature		–5 to 60°C (No freezing) (3)									
Port size for connection of pressure gauge		M5 x 0.8	Rc 1/8								
Weight (kg)		0.16	0.46			0.72			0.83		
Effective area at supply side (mm^2) S at P_1 = 0.7 MPa/P_2 = 0.5 MPa	P → A	5.5	21	18.5	11	35	31	26	44	38	32
	P → B	5.1	18.5	22	12	31	31	24	38	40	31
Effective area at exhaust side (mm^2) S at P_2 = 0.5 MPa	A → EA	12	40			55			90		
	B → EB	11	36			45			77		

Note 1) Maximum operating pressure of solenoid valve is 0.9 MPa.
Note 2) Set the pressure within operating pressure range of solenoid valve.
Note 3) Solenoid valve: Max. 50°C
Note 4) Synthesized effective area with 2 position.
Note 5)
- Operate an interface regulator only by applying pressure from the "P" port of the base, except when using it as a reverse pressure valve.
- To combine a pressure center valve and the A and B port pressure reduction interface regulator, use the ARBF3000, ARBF4000, or the ARBF5000 model.
- To combine a reverse pressure valve and an interface regulator, use the ARBF3000, ARBF4000, or the ARBF5000 model. The P port pressure reduction cannot be used.
- When combining a double check valve and an interface regulator, use a manifold or subplate as a basis, and stack them in the following order; the perfect spacer → the interface regulator → the valve.
- When a closed center valve is combined with the interface regulator's A, B port regulation, note that it cannot be used for intermediate stops of a cylinder because there is leakage from relief port on the regulator.

Flow Characteristics (P → A) (Condition: Inlet pressure 0.7 MPa when 2 position solenoid valve is mounted.)

JIS Symbol

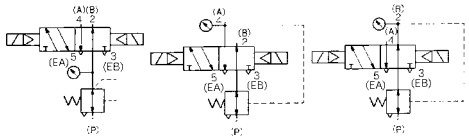

P port regulation A port regulation B port regulation

ARBF2000-00-P

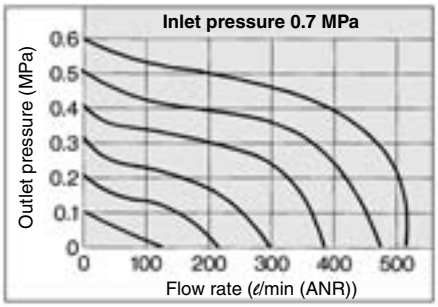

ARBF3050-00-P

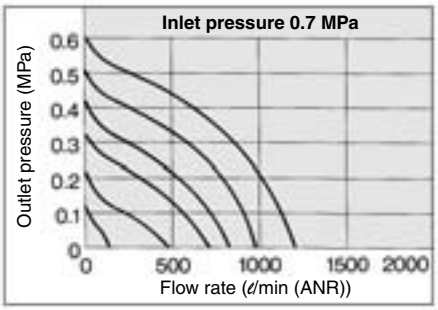

ARBF4050-00-P

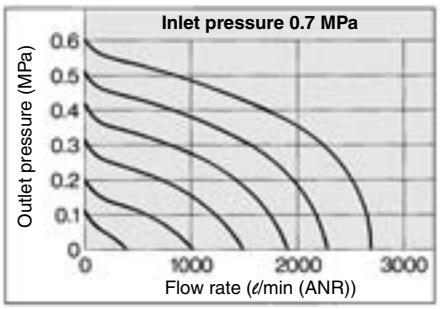

ARBF5050-00-P

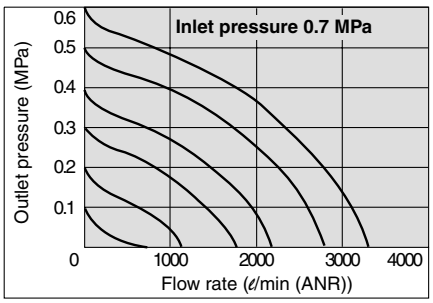

ARBF3050-00-A

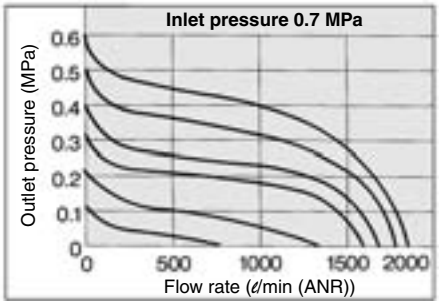

ARBF4050-00-A

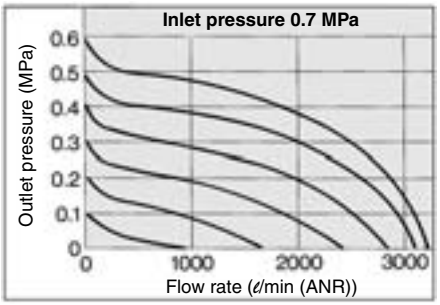

ARBF5050-00-A

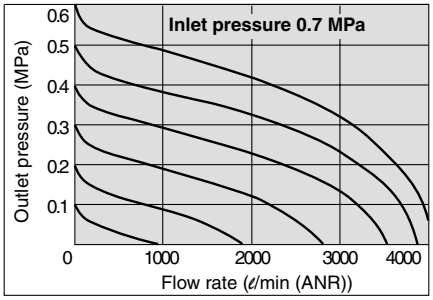

Specific Product Precautions 5

Be sure to read before handling. Refer to front matters 58 and 59 for Safety Instructions Instructions and pages 3 to 7 for 3/4/5 Port Solenoid Valve Precautions.

Lead Wire Connection

⚠ Caution

Type 01T with Terminal Block

Series VFR2000

- Remove junction cover of manifold, exposing terminal block attached to the manifold block. Lead wires from solenoid valve are connected with the terminals on upper side of terminal block. (On the terminal block, lead wire is connected with both A and B sides of solenoid valve in accordance with the corresponding markings A and B on the block.)
  Connect each lead wire of power side corresponding to respective solenoid valve on the lower terminal block.
  Terminal block wiring specifications is in accordance with COM.

Model \ Terminal block marking	A –	B +	B –
VFR2100	A side	COM	
VFR2200	A side	COM	B side
VFR2$^{3}_{4}_{5}$00	A side	COM	B side

- Applicable terminal:
  1.25-3, 1.25-3S, 1.25Y-3N, 1.25Y-3S
- Although “A–”, “B+” and “B–” marks are indicated on the terminal block, VFR2000 can be used as either “+COM” or “–COM”.

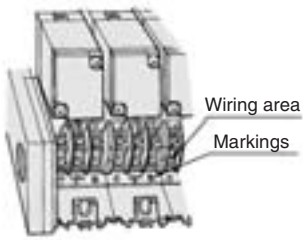

Series VFR3000

Model \ Terminal block marking	A –	COM +	B –
VFR3100	A side	COM	
VFR3200	A side	COM	B side
VFR3$^{3}_{4}_{5}$00	A side	COM	B side

- Applicable terminal:
  1.25-3.5M, 1.25Y-3L, 1.25-3M
- Although “A–”, “COM+” and “B–” marks are indicated on the terminal block, VFR3000 can be used as either “+COM” or “–COM”.

Series VFR4000

Model \ Terminal block marking	A –	B +	B –
VFR4100	A side	COM	
VFR4200	A side	COM	B side
VFR4$^{3}_{4}_{5}$00	A side	COM	B side

- Applicable terminal:
  1.25-3.5M, 1.25Y-3L, 1.25-3M
- Although “A–”, “B+” and “B–” marks are indicated on the terminal block, VFR4000 can be used as either “+COM” or “–COM”.

Series VFR5000

Model \ Terminal block marking	A –	B +	B –
VFR5100	A side	COM	
VFR5200	A side	COM	B side
VFR5$^{3}_{4}_{5}$00	A side	COM	B side

- Applicable terminal:
  1.25-3.5M, 1.25Y-3L, 1.25-3M
- Although “A–”, “B+” and “B–” marks are indicated on the terminal block, VFR5000 can be used as either “+COM” or “–COM”.

Series VFR2000/3000/4000/5000/6000
Specific Product Precautions 6

Be sure to read before handling. Refer to front matters 58 and 59 for Safety Instructions Instructions and pages 3 to 7 for 3/4/5 Port Solenoid Valve Precautions.

⚠ Caution

Lead Wire Connection | **Manifold/Plug-in Type**

Type 01C Circular Connector

Series VFR2000/3000/4000/5000

- When multi-connector is used, mass-termination between power supply side and solenoid valve can be done. This saves the wiring connection labor.
- Wire connection specifications
  Lead wire for both solenoid A and B sides in manifold are connected to connector terminal as COM specifications.

Fig. (1) U side

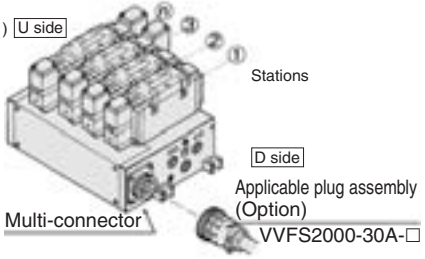

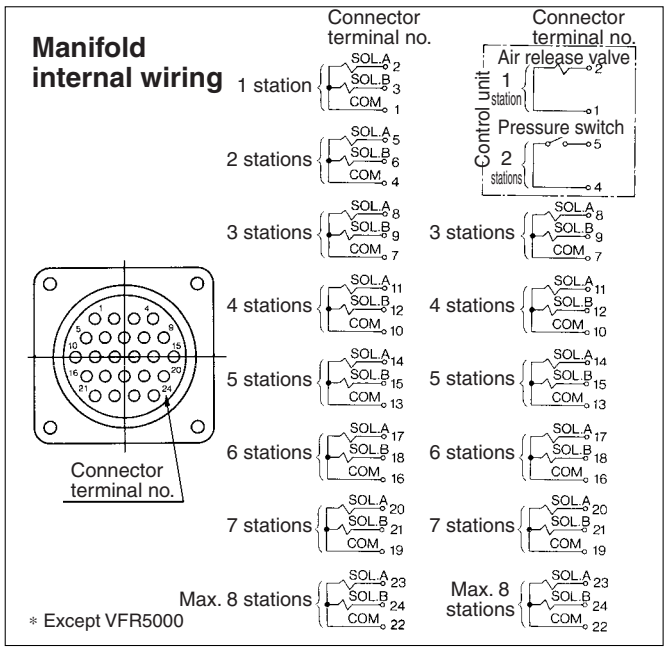

Note 1) Maximum number is 8 stations. Note 2) It is used as +COM and –COM.
Note 3) Station numbers are started from D side although connector is mounted

Applicable Plug Assembly (Option)

Assembly part no.	Cable length	Component parts
VVFS2000-30A-1	1.5 m	Plug 206837-1 1 pc. Cable clamp 206138-1 1 pc. Socket 66101-2 24 pcs. Cable VCTF 24 cores x 0.75 mm² made by Tyco Electronics AMP K.K.
VVFS2000-30A-2	3 m	
VVFS2000-30A-3	5 m	
VVFS2000-30A-4 ∗	7 m	
VVFS2000-30A-5 ∗	10 m	
VVFS2000-30A-6 ∗	15 m	
VVFS2000-30A-7 ∗	20 m	

∗ Option

Cable Color List of Each Terminal No.

Terminal no.	1	2	3	4	5	6	7	8	9	10	11	12	13
Lead wire color	Orange	Orange	Black	Black	Green	Green	Red	Red	Blue	Blue	Yellow	Yellow	Brown
Dot marking	—	Yes	—	Yes	—	Yes	—	Yes	—	Yes	—	Yes	—

Terminal no.	14	15	16	17	18	19	20	21	22	23	24
Lead wire color	Brown	White	White	Pink	Pink	Gray	Gray	Sky blue	Sky blue	Light green	Light green
Dot marking	Yes	—	Yes	—	Yes	—	Yes	—	Yes	—	Yes

Type 01F D-sub Connector

Series VFR2000/3000/4000/5000

- MIL standard type D connector (Terminal: 25 pins) has wide exchangeability and saves wiring labor.
- Wire connection specifications
  Lead wire for both solenoid A and B sides in manifold are connected to connector terminal as COM specifications.

Fig. (2) U side

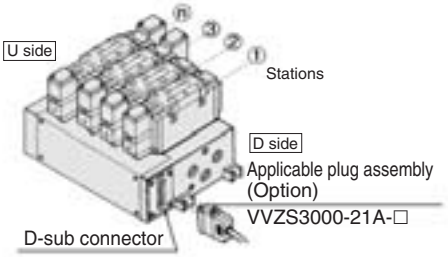

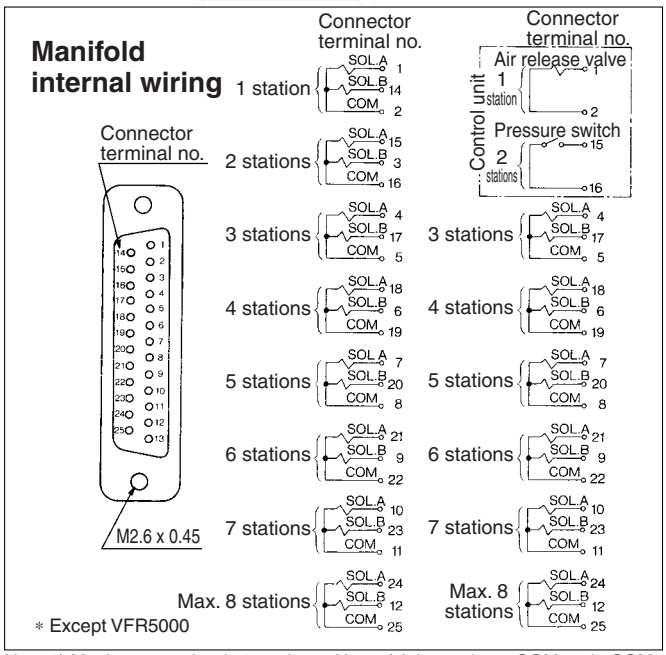

Note 1) Maximum number is 8 stations. Note 2) It is used as +COM and –COM.
Note 3) Station numbers are started from D side although connector is mounted

Applicable Plug Assembly (Option)

Assembly part no.	Cable length	Component parts
VVZS3000-21A-1	1.5 m	Plug MIL standard type D connector Number of terminals: 25 pins Cable: 25 cores x 0.3 mm²
VVZS3000-21A-2	3 m	
VVZS3000-21A-3	5 m	
VVZS3000-21A-4 ∗	8 m	
VVZS3000-21A-5 ∗	10 m	
VVZS3000-21A-6 ∗	15 m	
VVZS3000-21A-7 ∗	30 m	
VVZS3000-21A-8 ∗	20 m	

∗ Option

Cable Color List of Each Terminal No.

Terminal no.	1	2	3	4	5	6	7	8	9	10	11	12
Lead wire color	Black	Brown	Red	Orange	Yellow	Pink	Blue	Purple	Gray	White	White	Yellow
Dot marking	—	—	—	—	—	—	—	White	Black	Black	Red	Red

Terminal no.	13	14	15	16	17	18	19	20	21	22	23	24	25
Lead wire color	Orange	Yellow	Pink	Blue	Purple	Gray	Orange	Red	Brown	Pink	Gray	Black	White
Dot marking	Red	Black	Black	White	—	—	Black	White	White	Red	Red	White	—