SST & PRO II Media Filtration Systems

Installation and Operation Instructions

THIS MANUAL TO BE LEFT WITH THE END-USER

LAKOS PRO II & SST Systems are available with an optional skid mount assembly. Consult factory for details.

TABLE OF CONTENTS

Recommended Accessories ..... Page 2
Introduction 3
Basics of Operation 4
General Specifications PRO II 5
Materials of Construction PRO II 5
General Specifications SST 6
Materials of Construction SST 6
Media Sand Options 7
Site Preparations 7
Pre-Installation Checklist 7
Filter System Installation 8
Assembling The Components 8
Automatic Controller Configuration 9
Start-Up Procedures 10
Periodic/Mid-Season Maintenance 11
Seasonal Shutdown Procedures 11
Backwash Repair Recommendations 12
Troubleshooting 14
APPENDIX
Kits and Spare Parts Listing, LS-695 and LS-699

LS-906 (Rev. 2/12)

LAKOS
Separators and Filtration Solutions

Before You Begin....

CAUTION: Water sources vary and may contain impurities that can adversely affect a filter system. Minerals, biological microbes and other impurities must be identified and addressed by each user on a case-by-case basis. Adhere to seasonal shutdown recommendations to minimize problems. Contact your irrigation system dealer for additional information and further recommendations.

CAUTION: It is common to inject chemicals and/or liquid fertilizers into a drip/micro irrigation system. Such injection is recommended after the filter system to minimize potential deterioration and/or damage to the filter tanks and/or other filter system components.

Recommended Accessories

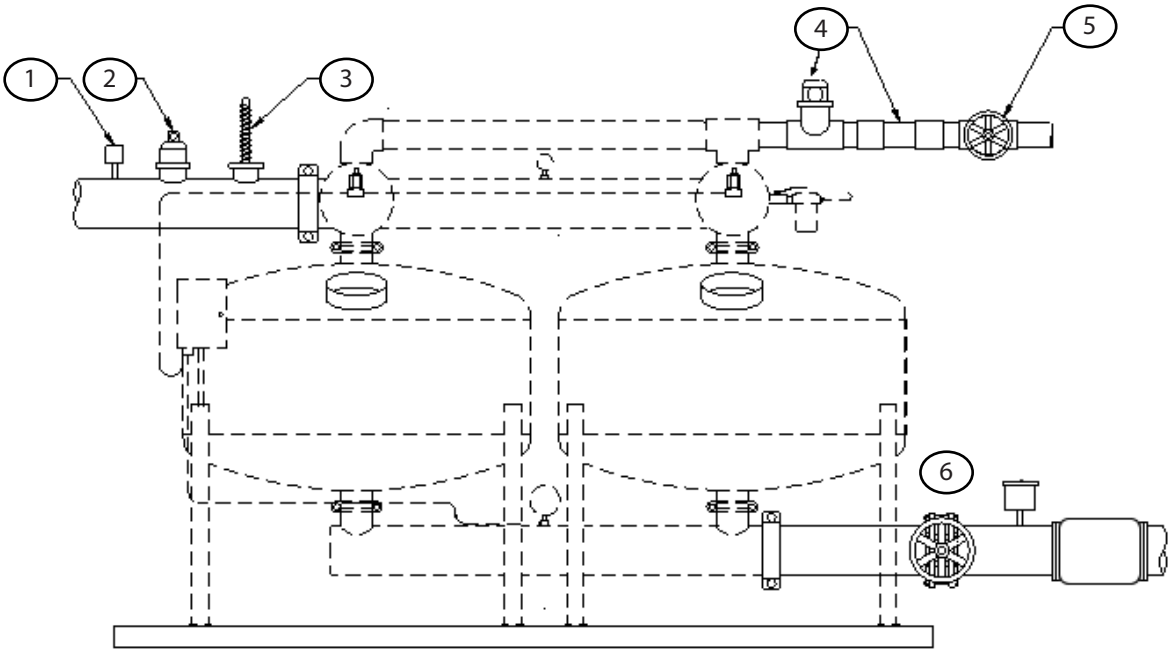

The following items are **NOT INCLUDED** with your LAKOS SST or PRO II Filter System. Consider the need and use your judgement when adding to your system.

1. **High pressure shut-off switch**
   Installed on inlet, pre-set at maximum operating pressure of the filter system.
2. **Air vents**
   Should be installed at highest points in the manifolds to bleed trapped air from the system.
3. **Pressure relief vents**
   These will protect the filter system from excess spikes in pressure or water hammer.
4. **Backwash sightglass/view-tube** (available as an option from LAKOS)
   Provides visual verification that backwash is in progress and operating at proper flow rate.
5. **Backwash line throttling valve**
   This valve helps ensure the proper backwash flow is maintained. See Start-Up Procedures, page 10.
6. **Pressure-Sustaining valve**
   Either manual or automatic valve to ensure adequate flow during backwash. Restricts downstream flow to direct necessary flow/pressure for backwashing.

For Additional Kits and Spare Parts:
Refer to literature LS-695 and LS-699 for SST and PRO II Sand Media Kits

Introduction

LAKOS Systems are the industry standard for operating performance and efficiency. Please read this manual carefully to ensure the best performance possible for your system. This manual contains information regarding assembly, start-up, seasonal shut-down, maintenance and troubleshooting. Keep this document for future use and reference. Should you have any questions or concerns, contact your LAKOS representative for further assistance.

LAKOS Sand Media Filtration Systems are designed for use with drip/micro irrigation systems to keep unwanted particle matter out of the irrigation system. Media filtration is recommended when the contaminants are lightweight in nature, such as algae, organics, silt, etc. For heavy sand particles, which may not backwash during normal operation, consider a LAKOS Centrifugal Separator as a pre-filter to prevent excess accumulation of sand particles on the sand media. (e.g. IHB Separator, BRS, to name two options)

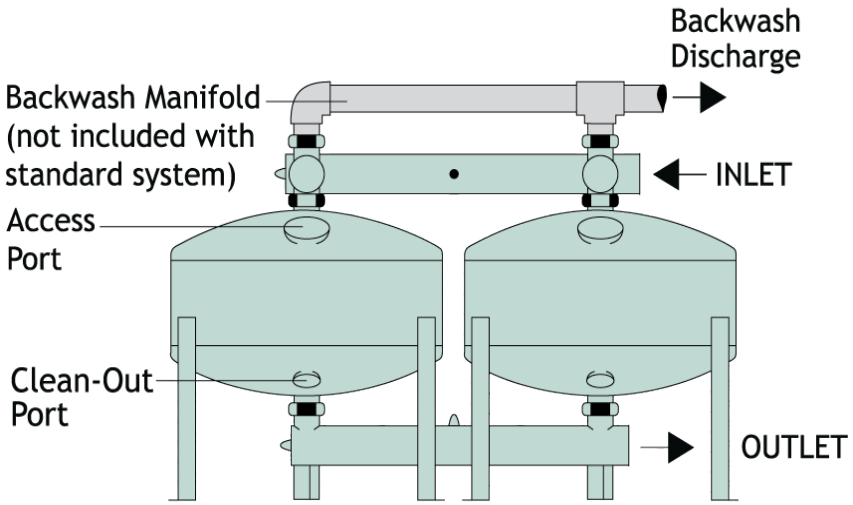

The exclusive LAKOS Underdrain only requires one grade of media sand. No need for a coarse gravel pack, since the LAKOS Underdrain is a full-coverage pattern, enabling backwash water to immediately flow upward from the underdrain to uniformly and completely flush the entire media bed depth and surface area.

LAKOS UNDERDRAIN

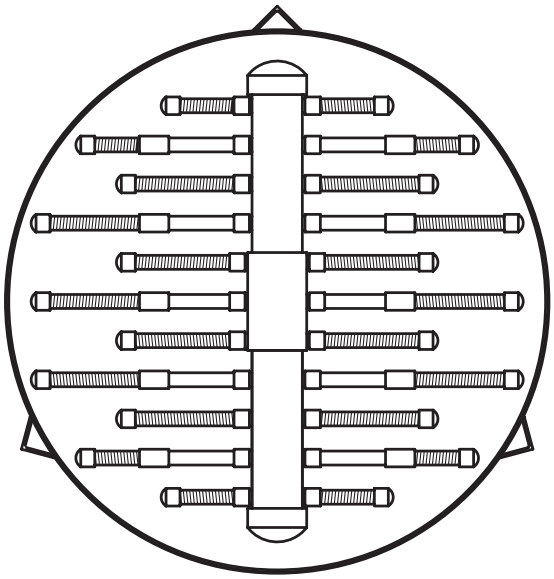

Basics of Operation

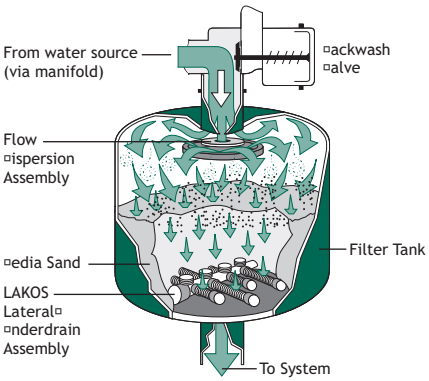

The Filtering Process

The filtering process engages the use of a specified sand media to trap foreign matter on the surface layer, allowing filtered water to percolate through the sand media and LAKOS internal v-slotted lateral assembly, discharging at the bottom of each tank to the outlet manifold.

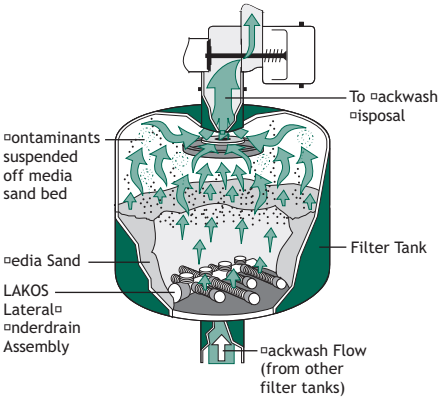

The Backwash Cycle

The backwash cycle flushes trapped debris from the sand media and out of the filter tanks. Each tank in a LAKOS System is flushed individually for maximum agitation of the sand media. Triggered by pressure differential, by elapsed time or manually, each tank's backwash valve is alternately activated into the backwash mode, which simultaneously interrupts inlet flow to that particular tank. Overall system pressure then directs partial system flow back into and through the tank's lateral assembly.

Flow continues for a prescribed period of time (typically one minute), suspending the foreign matter and carrying it out through the tank's top port (normal inlet) and out through the backwash valve and piping. The backwash valve then returns to its original position and restores the now "clean" filter tank to normal service.

NOTE: The LAKOS automatic controller provides a variable time delay between stations to avoid overlapping backwash cycles and maximize backwash efficiency.

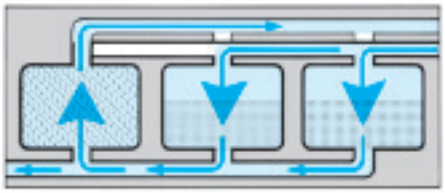

PRO II General Specifications

Model*	Flow Range**		System Manifold Inlet/Outlet Grooved Couplings		System Media Sand Requirement		Maximum Filter Tank Pressure		System Filtration Area		Minimum Backwash Line Size		Recommended Backwash Flow Rate Per Tank	
	U.S. gpm	m^3/hr.	in.	cm.	lbs.	kg	psi	bar	ft^2	m^2	in.	cm.	U.S. gpm	m^3/hr.
PRO-II-2104-2	70-119	16-27	4	10.2	600	272	150	10.3	4.8	0.45	3	7.6	36	8.2
PRO-II-2104-3	107-178	24-40	4	10.2	900	408	150	10.3	7.2	0.67	3	7.6	36	8.2
PRO-II-3204-2	160-270	36-61	4	10.2	1400	635	125	8.6	10.8	1.00	3	7.6	81	18.4
PRO-II-3204-3	240-405	54-92	4	10.2	2100	953	125	8.6	16.2	1.50	3	7.6	81	18.4
PRO-II-4806-2	375-625	100-142	6	15.2	2600	1179	80	5.5	25.1	2.33	4	10.2	188	42.7
PRO-II-4806-3	565-940	128-213	6	15.2	3900	1769	80	5.5	37.7	3.50	4	10.2	188	42.7
PRO-II-4808-4	750-1240	170-282	8	20.3	5200	2358	80	5.5	50.2	4.66	4	10.2	188	42.7
PRO-II-4810-5	940-1550	213-352	10	25.4	6500	2948	80	5.5	62.8	5.83	4	10.2	188	42.7
PRO-II-4810-6	1130-1870	257-425	10	25.4	7800	3537	80	5.5	75.4	7.00	4	10.2	188	42.7
PRO-II-4810-7	1320-2200	300-500	10	25.4	9100	1165	80	5.5	87.9	8.17	4	10.2	188	42.7
PRO-II-4810-8	1510-2510	343-570	10	25.4	10400	1350	80	5.5	100.4	9.33	4	10.2	188	42.7
PRO-II-4812-10	1885-3140	428-715	12	30.5	13000	1680	80	5.5	125.6	11.67	4	10.2	188	42.7

*Model numbers identify individual tank size/diameter (first two numbers), inlet/outlet size (second two numbers) and number of tanks per system (last number).

**Flow range based on a filtration range of 15-25 U.S. gpm/ft^2 (37-61 m^3/hr/m^2).

***NOTE: Minimum recommended operating pressure range for proper actuation of LAKOS Backwash Valve is 20 psi (1.4 bar).
The stated flow range is based on a filtration range of 15-25 gpm/ ft^2. (37-61 m^3/hr/m^2).

Materials of Construction

Filter Tanks: A-36 carbon steel; 3-inch lower sand clean out port; 10 gauge thickness; powdercoated inside and outside.

Manifolds: Piping for 48-inch tanks is stainless steel, grooved-end connections. 14 gauge wall thickness. Piping for 21 & 32-inch tanks is schedule 80 PVC pipe. Couplings are ductile steel.

Backwash Valves: Cast steel body with epoxy coated internal/external. Rear-entry feature for inspection/replacement of plunger diaphragm. Stainless steel shaft & guide bushing (3-inch valve: PVC guide bushing). Stainless steel disc with vulcanized rubber to seal the backwash port.

Controller: Solid-state timing. Standard LAKOS Controller accommodates 12-volt DC or solar power, 110-volt AC or 220-volt AC power supply. Up to 8 stations per controller (add controller to slave for additional stations). Steel housing.

LAKOS Underdrain: Material is schedule 40 PVC, with injection molded PVC slotted screen as the open area component. Open slotting is internally v-slotted (narrow on the exterior surface, wider on the interior surface) providing a nozzle effect to more effectively introduce water into the tank during backwashing. Open slot size is 0.012 inch in the slotted screen.

SST General Specifications

Model*	Flow Range*		System Manifold Inlet/Outlet Grooved Couplings		System Media Sand Requirement		Maximum Filter Tank Pressure		System Filtration Area		Minimum Backwash Line Size		Recommended Backwash Flow Rate Per Tank ***	
	U.S. gpm	m^3/hr.	in.	cm.	lbs.	kg	psi	bar	ft^2	m^2	in.	cm.	U.S. gpm	m^3/hr.
SST-1530-2	38-63	9-14	3	7.6	300	136	100	7.0	2.5	0.23	3	7.6	18	4.1
SST-1803-2	53-88	12-20	3	7.6	500	227	100	7.0	3.5	0.33	3	7.6	27	6.1
SST-1803-3	80-133	18-30	3	7.6	800	363	100	7.0	5.3	0.49	3	7.6	27	6.1
SST-2403-2	95-158	22-36	3	7.6	900	408	100	7.0	6.3	0.59	3	7.6	47	10.7
SST-2404-3	141-235	32-53	4	10.2	900	408	100	7.0	6.3	0.59	3	7.6	47	10.7
SST-3004-2	147-245	33-56	4	10.2	1000	454	100	7.0	9.8	0.91	3	7.6	74	16.8
SST-3004-3	220-368	50-84	4	10.2	1500	680	100	7.0	14.7	1.37	3	7.6	74	16.8
SST-3006-3	220-368	50-84	6	15.2	1500	680	100	7.0	14.7	1.37	3	7.6	74	16.8
SST-3604-2	212-353	48-80	4	10.2	1800	816	100	7.0	14.1	1.31	3	7.6	106	24.1
SST-3606-2	212-353	48-80	6	15.2	1800	816	100	7.0	14.1	1.31	3	7.6	106	24.1
SST-3606-3	318-530	72-120	6	15.2	2700	1225	100	7.0	21.2	1.97	3	7.6	106	24.1
SST-4806-2	377-628	86-143	6	15.2	2600	1179	80	5.5	25.1	2.33	4	10.2	188	42.7
SST-4806-3	566-943	128-214	6	15.2	3900	1769	80	5.5	37.7	3.50	4	10.2	188	42.7
SST-4808-4	753-1255	171-285	8	20.3	5200	2359	80	5.5	50.2	4.66	4	10.2	188	42.7
SST-4810-5	912-1255	207-285	10	25.4	6500	2948	80	5.5	62.8	5.83	4	10.2	188	42.7
SST-4810-6	1131-1885	257-428	10	25.4	7800	3538	80	5.5	75.4	7.00	4	10.2	188	42.7
SST-4810-7	1319-2198	299-499	10	25.4	9100	4128	80	5.5	87.9	8.17	4	10.2	188	42.7
SST-4810-8	1508-2513	342-570	10	25.4	10400	4717	80	5.5	100.5	9.34	4	10.2	188	42.7
SST-4812-8	1508-2513	342-570	12	30.5	10400	4717	80	5.5	100.5	9.34	4	10.2	188	42.7
SST-4812-9	1695-2825	385-641	12	30.5	11700	5307	80	5.5	113.0	10.50	4	10.2	188	42.7
SST-4812-10	1695-2825	385-641	12	30.5	11700	5307	80	5.5	113.0	10.50	4	10.2	188	42.7

*Model numbers identify individual tank size/diameter (first two numbers), inlet/outlet size (second two numbers) and number of tanks per system (last number).

**Flow range based on a filtration range of 15-25 U.S. gpm/ft^2 (37-61 m^3/hr/m^2).

***NOTE: Minimum recommended operating pressure range for proper actuation of LAKOS Backwash Valve is 20 psi (1.4 bar).
The stated flow range is based on a filtration range of 15-25 gpm/ ft^2. (37-61 m^3/hr/m^2).

Materials of Construction

Filter Tanks: 304L certified stainless steel; with 8 inch size, epoxy-coated steel bolt-on top inspection port and 4-inch size lower-dome sand clean-out port & PVC plastic plug. 14 gauge wall thickness.

Manifolds: 304L stainless steel, grooved-end connections. 14 gauge wall thickness.

Backwash Valves: Cast steel body with epoxy coated internals. Rear-entry feature for inspection/ replacement of plunger diaphragm. Stainless steel shaft & guide bushing (3-inch valve: PVC guide bushing). Stainless steel disc with vulcanized rubber to seal the backwash port.

Controller: Solid-state timing. Standard LAKOS Controller accommodates 12-volt DC or solar power, 110-volt AC or 220-volt AC power supply. Up to 8 stations per controller (add controller to slave for additional stations). Steel housing.

(continued on next page)

LAKOS Underdrain:

LAKOS Underdrain

- SST 48 inch tanks- Material is schedule 40 PVC, with injection molded PVC slotted screen as the open area component. Open slotting is internally v-slotted (narrow on the exterior surface, wider on the interior surface) providing a nozzle effect to more effectively introduce water into the tank during backwashing. Open slot size is 0.012 inch in the slotted screen.
- SST 15 - 36 inch tanks- Material is schedule 40 PVC, with plastic wedgewire screen material as the open area component; minimum 135 psi (9.3 bar) collapse strength. Open slotting is internally v-slotted (narrow on the exterior surface, wider on the interior surface) providing a nozzle effect to more effectively introduce water into the tank during backwashing. Open slot size is 0.010 inch in the slotted screen.

Media Sand Options

Overall, the open area of the LAKOS underdrain is approximately four times greater than the inlet/outlet size of the filter tank, providing no pressure loss through the filter (without sand). When sand is added to the filter tanks, a clean sand operating pressure loss of 1-2 psi is to be expected (assuming media sands of #12, #16 and #20 sizes).

Required media sand is not included with standard systems, but is available from LAKOS. Only one grade of sand media is necessary with any LAKOS system -- no coarse gravel base layer is required. The following sand grades are typically chosen for drip/micro irrigation purposes:

Media Grade	Sand Size Specifications
#20 Crushed Silica	200-250 mesh; 75 micron size
#16 Crushed Silica	150-200 mesh; 105 micron size
#12 Crushed Silica	130-140 mesh; 150 micron size

Site Preparations

A level concrete pad is recommended for placement of the LAKOS SST or PRO II Systems. Position the pad and the filter system for the most efficient placement of piping from the pump to the irrigation system and the backwash line. Minimize the number of elbows and changes in elevation to and from the filter system.
All electrical work and components should meet all applicable codes. Protect all wires and electrical components from moisture.

Pre-Installation Checklist

☐ Inventory that all parts are included with the system. See Page 2 for Recommended Accessories.

☐ Check inside each filter tank to be sure no foreign objects or debris are present in the tanks. Verify that the underdrain is in place securely with no damage. Be sure the lower-dome clean-out port is securely tightened.

☐ Check all grooved-end connections for any damage that could hinder proper assembly.

☐ Assemble legs, if the legs on your system were delivered disassembled.

Filter System Installation

Align the filter tanks for easy access to the top access and lower-dome clean-out ports; consider the placement of the manifolds and other components. Attach the backwash valves to each tank securely with couplings, using proper lubricant on the gaskets. Be sure that valves are installed with proper connection to the tanks.

Attach the inlet, outlet and backwash manifolds with grooved-end couplings. **NOTE:** BACKWASH LINE IS NOT PROVIDED BY LAKOS.

IMPORTANT: The common practice of injecting fertilizers or chemicals should be piped into the system line *downstream of the filter system*. Some chemicals can be aggressive and harm or compromise the components of your filter system, reducing the life of your filter system.

Using the top access port, add the proper volume of media sand to each tank (refer to the Specification chart on pages 5 or 6). It is recommended that media sand be added slowly and with some water in the tank to better insure that the sand properly beds both below and around the underdrain. Proper volume of sand will fill each tank to approximately 2/3 level.

Assembling The Components

The following diagrams illustrate the proper assembly of the various parts of your LAKOS Filter System. Note that setting up an automatic system requires a longer setup and configuration time.

With either system, use proper care with the barbed tubing fittings to avoid damage/leaking problems. NOTE: Kit Assembly detail can be found in the LS-695 and LS-699 Spare Parts Listing.

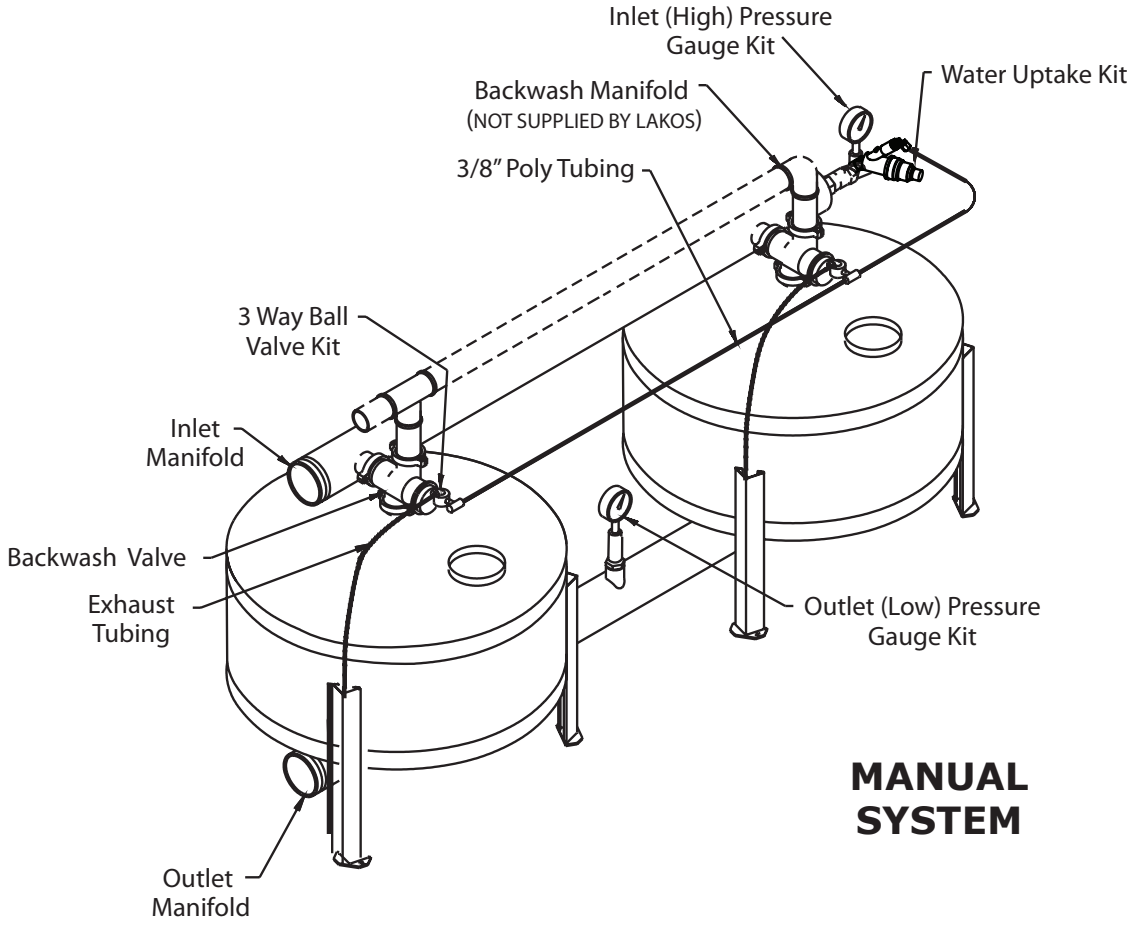

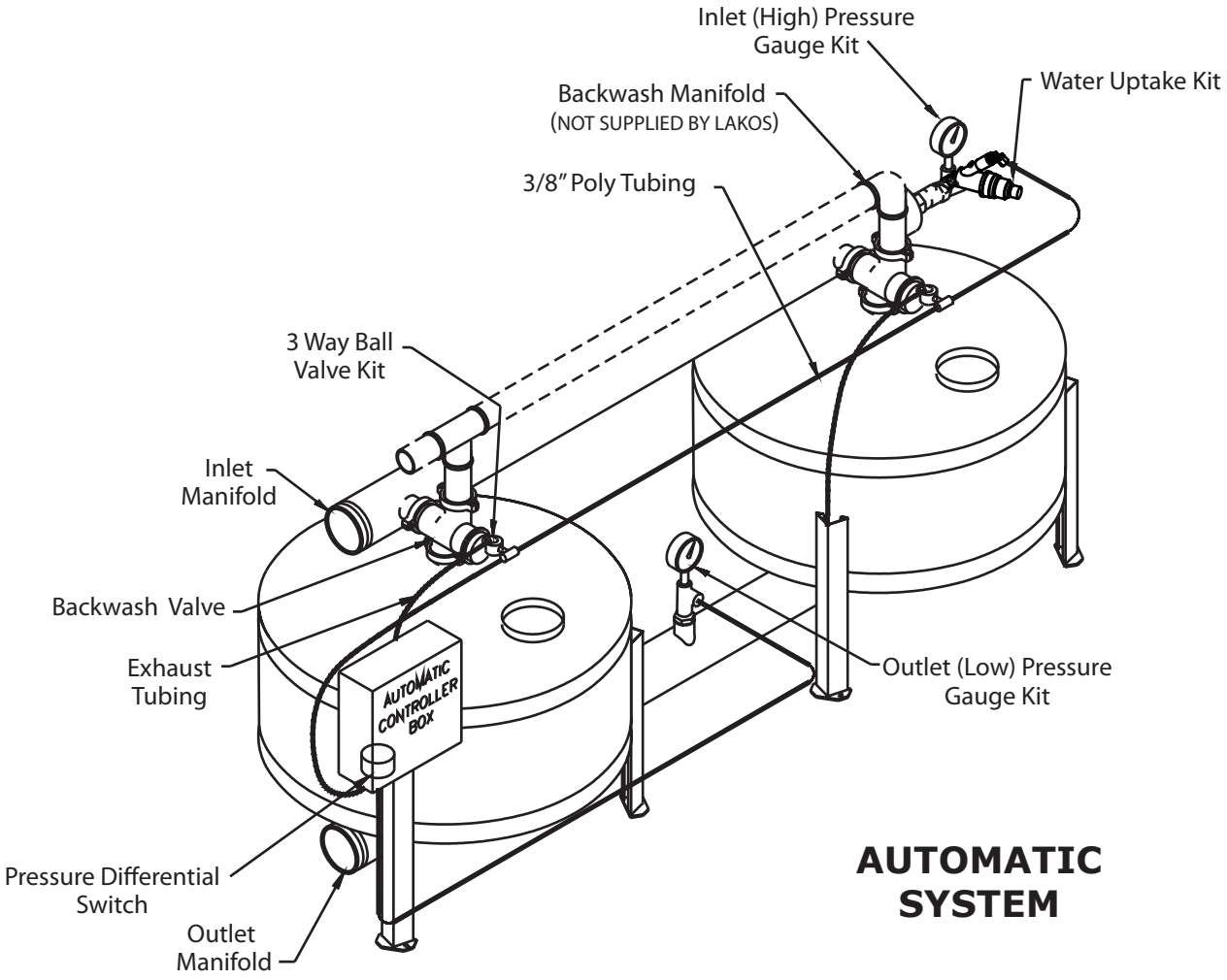

LAKOS Automatic Controller Configuration

For automatic systems only.

Follow all instructions included with the controller for proper installation and set-up. Note that the following settings must be verified before operating this controller. Each of these settings can be found on the backside of the inner control panel.

- **Output Voltage**
  - Select AC if 24 VAC solenoids are used on your backwash valves.
  - Select DC/DCL if your solenoids are either 12 VDC or 12 VDC Latching. If power supply is DC/solar, controller assumes that DCL solenoids are in use.

  IMPORTANT: Do not mix the type of solenoids in your system. All solenoids must be the same type (24VAC, 12VDC or 12VDC Latching).

- **Number of Tanks in Operation**
  Attaching solenoid wiring to the terminal block signifies the number of tanks operating in the system.

- **Pre-Dwell -** A set time of 30 seconds for sustained pressure differential (from inlet to outlet) before controller initiates a backwash cycle.

- **Dwell-Time -** Set time of 60 seconds between backwashing of tanks in a system.

Main Controller Panel Settings

The following functions on the main controller panel must also be set properly:

- **PERIODIC Flush Time**
  This setting insures that the filter system will experience a backwash cycle as set, regardless of the pressure differential setting. In other words, if the contaminant build-up on the filter media does not cause a backwash cycle before this setting, the Periodic timer will initiate a full backwash cycle of all tanks. This prevents troublesome debris, such as fine silt or caking algae, from becoming too difficult to remove via normal backwashing. The recommended Periodic setting is 24 hours; set for more frequent intervals for more problematic contaminants.
- **FLUSH Duration**
  Set the desired duration of your backwash cycle per tank. Typical setting is 90-120 seconds, but longer duration is recommended if the backwash flow does not run clear for about 10-15 seconds at the end of each tank's backwash cycle.
- **DWELL Time**
  Each backwash valve needs time to open and close. Dwell time provides time for one backwash valve to close and the system to normalize before the next backwash valve opens in the backwash cycle. This setting is dependent on system pressure and the age of the backwash valve, but a range of 10 to 25 seconds is recommended.
- **Pressure Differential Switch**
  The Automatic Controller includes a Pressure Differential Switch that must be set for proper operation. This device measures the line pressure difference between the inlet and outlet manifolds on your media filter system. When the pre-set pressure differential is reached, the PD switch will automatically initiate a full backwash cycle of all filter tanks, one tank at a time. Access this switch by opening the inner panel of the controller. Your LAKOS Filter System operates effectively with a pressure differential setting of 6-7 psi. Other settings could result in excessive backwashing or inadequate backwashing, either wasting water or clogging your media sand with too much contaminant material. NOTE: When pressure differential triggers a backwash sequence, the Periodic Flush Time (see above) is reset.

Start-Up Procedures

1 Start the system pump or open the system valve that supplies water through the filter system. Allow time for water to fill the filter tanks and air to bleed out of the system. A minimum of 20 psi is required for system pressure in order to actuate backwash valves.

2 Media sand will require at least one initial backwash cycle (or more) before actual operation. Initiate the manual backwash of each filter tank, *one tank at a time.* To do so, turn the manual button on the automatic solenoid (or move the manual 3-way valve on the back of the backwash valve). Give the valve about 10-15 seconds to fully activate. The throttling valve on the backwash manifold (see Recommended Accessories, page 2) should be fully open at this time.

3 Once the flow through the backwash manifold becomes constant, the backwash water should be fairly dirty in appearance; this is especially true when starting-up a new system or new media sand has been added. At this time, slowly close the throttling valve to reduce backwash flow until only a trace of media sand is present in the backwash flow (about a small handful of media sand in the palm of your hand during a 2-minute backwash cycle is about right). Set the throttling valve to this

position. Allow about two minutes for this initial backwash cycle. Manually adjust the solenoid (or move the 3-way valve for manual systems) to stop the backwash cycle for that filter tank.

NOTE: The manual adjustment for each solenoid should be OFF for normal operation. ON is the manual override.

4 Initiate a backwash cycle for each of the remaining filter tanks in the filter system, as noted above. No need to adjust the throttling valve again. If backwash water is not running fairly clear after this initial backwashing, repeat the backwashing cycle for all filter tanks. It is not unusual to run through three or more backwash cycles to initially clean new media sand.

5 During this initial operation and backwashing cycling, inspect the filter system and connections for any leaks. Adjust the throttling valve only if system flow or pressure changes. If inadequate backwash flow is observed, it may be necessary to install a valve on the system flow line downstream of the filter system to help divert the necessary flow to the backwash cycle. For an automatic system, this downstream valve will need to be adjusted electronically to coincide with each backwash cycle.

Periodic/Mid-Season Maintenance

During an operating season, inspection should be performed regularly. How often you inspect and maintain your filter system can determine how long your filter system will last.

1 Shut off the system pump and disconnect power to the automatic controller. Open the upper inspection ports of each filter tank and inspect media sand for quantity and quality. Loss of sand suggests excessive backwashing. The presence of contaminants or slime suggests inadequate backwashing. Refer to Start-up Procedures on page 10 for backwash adjustments.

2 Via the automatic controller, initiate a manual backwash cycle by pressing the manual button for one second. Each filter tank should backwash as programmed. Note the dwell time and backwash duration.

3 Inspect all tubing & componentry for proper connections and any damage.

4 Check the y-strainer on the water uptake kit; clean internal screen if necessary.

5 Check the pressure gauges for expected readings.

Seasonal Shutdown Procedures

LAKOS recommends that all SST and PRO II tanks be shut down when not in active use for long periods of time. To do this:

1 Perform a long and somewhat aggressive backwash cycle for all filter tanks in the system, backwashing each tank for at least two minutes and opening the backwash throttling valve a bit more than normal operation.
CAUTION: If any chemicals are introduced to the irrigation system at shutdown, it should be downstream of the filter system. If upstream, flush clean water through the filter system before shutting down the filter system at season's end.

2 Shut down the system pump and disconnect power to the automatic controller (if applicable). Open each tank and inspect for sand quantity and quality. If additional or new sand is needed, make note to add the necessary sand prior to start-up before next season.
CAUTION: The presence of slime anywhere inside the tanks or excessive contaminants throughout the sand media suggests the need to replace all media sand. Remove all sand from the media tanks at this time, but do not introduce new sand until just prior to start-up for next season.

3 Drain the filter system completely of all water. It is best to open a coupling connection on outlet manifold of the filter system to ensure that all water is drained from the lowest point of the filter system.

4 All systems: Clean the y-strainer on the water uptake kit.

5. For optimum life expectancy, lubricate the internal shaft of each LAKOS Backwash Valve. Remove the solenoid (automatic systems only) or manual 3-way valve (manual systems only) from the back connection of the backwash valve body. Remove the system backwash line to gain access to the backwash outlet of the valves. Inject air into the back port of each backwash valve (about 20-25 psi) in order to push the internal shaft of the backwash valve into the backwashing position. This exposes the internal shaft to access via the backwash outlet. Maintain this position and apply lubricant onto the shaft. Release the air pressure and allow the lubricated shaft to recede into the body of the backwash valve, lubricating the internal o-rings. Re-attach the solenoids or 3-way valves and backwash line.

Backwash Valve Repair Recommendations

REMOVE THE BACKWASH VALVE FROM THE SYSTEM

1. Begin by removing the back cover from the valve. This will eliminate the need to remove the solenoid, conduit & wiring.
2. Inspect the rubber diaphragm covering the piston. The “smooth and shiny” side of this diaphragm should be facing the back cover of the valve; the cloth-like rough surface should be wrapped around the piston. Check for tears, wear or any holes in this part. Replace if necessary.
3. Loosen and remove the three grooved couplings to release the valve body from the tank and inlet/backwash manifolds.

INSPECT / REPLACE THE DISC

1. Locate (from the backwash opening of the valve body) the 7/16-inch machined portion of the backwash valve’s shaft. Secure that shaft with a wrench to prevent it from rotating.
2. Using the appropriate ratchet with extension, enter the valve body from the inlet opening and loosen the end nut. Disc is removed via the valve’s outlet (to the filter tank).
3. Inspect the rubber on the disc. If it is worn, torn or deformed, it should be replaced.

REMOVE THE SHAFT

This procedure will likely damage the diaphragm. Be prepared to replace the diaphragm.

1. Grasp the piston and pull it straight out of the back of the valve body. The shaft will follow.
2. Inspect the piston for damage of the epoxy coating. If any nicks or scratches are noted, replace the piston.
3. To remove the shaft from the piston, first secure the center section of the shaft (where machined) with a 7/16-inch wrench to prevent rotation. Using a 5/32-inch allen wrench, loosen and remove the pan-head screw located on the face of the piston.
4. Remove the spring. The spring should have a tension of approximately 60 to 70 foot-pounds of pressure. Normal life expectancy is 5 to 7 years. Replacement during maintenance may be more cost-effective than trying to overextend the life of this part.
5. Remove the two o-rings on the shaft (these should be replaced whenever servicing the valve) and inspect the shaft for any rough surfaces. Replace if evident.
6. Wipe all re-usable parts with a clean cloth.

RE-ASSEMBLING THE SHAFT

1. Be sure that the shaft is clean and free of any debris in the groove. Carefully slide the o-ring onto the shaft and into the groove. Apply a small amount of petroleum jelly to lubricate the o-ring.
2. Clean the inside of the stainless steel bushing.
3. Attach the shaft to the piston, using an allen wrench.
4. Place the spring over the shaft, allowing it to rest on the inside of the piston.
5. Guide the threaded end of the shaft through the bushing, using extra care when the o-ring enters the bushing.
6. Test the movement of the shaft in the bushing. It should glide smoothly, not allowing the o-ring to slip out of its groove. If the o-ring does move, apply more petroleum jelly to the o-ring and shaft.

RE-ATTACHING THE DISC

1. *L-0801-A Valve:* Position the stainless steel insert on the bevelled side of the disc against the flat surface inside the inlet of the valve body.
2. *L-0801-B Valve:* Position the stainless steel insert and rubber guard plate against the flat surface inside the inlet of the valve body.
3. Slide the shaft assembly from the backside of the valve body, through the backwash outlet chamber and toward the backwash valve's inlet. Attach the shaft to the disc, securing the shaft with a 7/16-inch wrench and tightening the lock nut onto the disc.
4. Apply pressure to the piston and again check the shaft for smooth travel through the bushing.

RE-ATTACHING THE DIAPHRAGM

1. The diaphragm is marked to identify the "pressure side", which should be the side facing the rear of the valve (exposed to the solenoid). Avoid wrinkling or pinching the diaphragm between the piston and the valve body.
2. At this point, re-install the backwash valve onto the filter tank and manifolds, using the grooved-end couplings.
3. Align the holes on the lip of the diaphragm with the holes on the backwash valve body.
4. Place the backwash valve's back cover into position, being careful to keep the lip of the diaphragm flat against the valve body (creating a gasket between the valve body and back cover). The solenoid should be in the top (12 o'clock) position.
5. Insert the bolts, slide on the lock-washers and secure the nuts to firmly re-attach the back cover to the backwash valve.

Troubleshooting

PROBLEM	POSSIBLE CAUSES	SOLUTIONS
Poor Filtration	● Excessive flow through filters, causing “coning” of media sand and/or forcing contaminants through filter outlet. ● Air in tank(s) may cause disruption of the media sand bed. ● Incorrect media sand. ● Excessively high pressure differential before backwashing, which forces contaminants through filter bed. ● Insufficient volume of media in filter, which allows contaminants to pass through the system.	1. Reduce flow rate or add extra filter tank(s). See pages 5 or 6 for flow recommendations. 2. Bleed off trapped air in system. 3. Replace with proper media sand. Consult your LAKOS representative. 4. Backwash more often at lower differential pressure. 5. Add proper sand media to tank(s) to specified level.
Consistently High Pressure Differential	● Excessive contaminant load restricts flow through the filters and prevents sufficient flow for backwashing. ● Insufficient backwash flow. ● Inadequate media sand volume, which may minimize coverage of backwash flow across filter bed, creating dead spots of accumulated contaminants.	1. Drain tank(s) and remove hand-hole access ports. Carefully skim away any excess or caked contaminants from the media sand bed’s surface. Return tank(s) to normal service and backwash system. 2. Readjust backwash or partially close field valve. 3. Follow #1 and add sand media as necessary.
Increasing Frequency of Backwash Cycle	● Backwash flow or duration is not adequate to flush filter tanks of all contaminants. ● Insufficient sand volume. ● Increased concentration of contaminants in water supply.	1. Adjust backwash flow or duration. 2. Add media sand to achieve proper volume. 3. Adjust backwash frequency or reduce pressure differential setting to achieve more frequent backwash cycles.
Automatic Backwash Fails to Cycle	● Controller power may be off or circuit breaker tripped. ● Improper setting of differential switch. ● Soleniod(s) malfunctioning. ● Loss of sufficient pressure to actuate valve(s).	1. Be sure wiring is connected correctly. Reset circuit breaker. Turn on power. Controller may be faulty and need replacement. 2. Adjust as necessary. Typical is 6-7 psi. 3. Check connections, clean ports and check for the sound of the solenoid actuating. Replace solenoid if necessary. 4. Check filter screen on water uptake kit and hydraulic lines for clogs or breaks/leaks. Replace as necessary.

Troubleshooting

PROBLEM	POSSIBLE CAUSES	SOLUTIONS
Media Sand Appears Downstream	● Incorrect media sand (i.e. too fine and too small) ● Broken, damaged, or missing lateral.	1. Replace media with proper sized media. 2. Repair or replace laterals of the underdrain.
Backwash Valve Leaks	● Obstruction in the valve seat. ● Rubber seating disc is worn or damaged. ● Diaphragm damaged (Leaking from bleed port hole located on the piston chamber).	1. Remove the obstruction. 2. Replace seat disc. 3. Replace diaphragm.
Water Hammer	● Air in tanks. ● Long backwash line causing vacuum.	1. Bleed off trapped air in system. Air vent on system may be required. 2. Install vacuum breaker on backwash line.

Installation Notes

APPENDIX

Kits and Spare Parts Listing

LS-695 for SST Sand Media Kits
LS-699 for PRO II Sand Media Kits

LAKOS
Separators and Filtration Solutions
1365 North Clovis Avenue
Fresno, California 93727 USA
Telephone: (559) 255-1601 Fax: (559) 255-8093
info@lakos.com
www.LAKOS.com