Submersible Pump Protection Separators

Prevents sand abrasion damage to pumps, increasing life and maintaining efficiency

SUB-K

Systems Under 100 gpm

Models available for both turbine and submersible pumps.

Defend your submersible pump and water system from the abrasive, damaging and costly effects of sand with a LAKOS SUB-K Pump Protection Separator. Using controlled centrifugal action, troublesome sand is removed from the water before it enters the pump, reducing wear to impellers and other vital components.

Manufactured using our state-of-the-art injection molding techniques and industrial strength composite materials, the SUB-K features no moving parts to wear out, no screens or filter elements to clean or replace, and requires no routine maintenance. Trouble-free and effective, LAKOS SUB-K Separators are easy to install into water wells as small as 4 inches I.D.

SAND-DAMAGED SUBMERSIBLE PUMP IMPELLER

- **Dramatically reduces sand wear**
- **Extends the pump's life by four times or more**
- **Controls excessive efficiency loss and energy costs**
- **Minimizes breakdowns and replacements**
- **Reduces downstream filtration burden**

Flow range: 3 - 99 U.S. gpm (.7 - 23 m^3/hr)

For higher flow rates and for all turbine pumps, refer to the LAKOS PPS Separators

LAKOS®
Separators and Filtration Solutions

How It Works

Where Does the Sand Go? Will Separated Sand Fill Up the Well?

The SUB-K Series Separator is designed to prevent excessive sand from damaging a pump. Unchecked, sand wear costs significant time and money. Instead, the separator offers a more cost-effective alternative.

Separated sand is periodically discharged deep into the well. Experience has proven that accumulation is not an issue to fear. While rare cases occur where the sand accumulation requires bailing of the well, more often the actual flow of the aquifer serves to evacuate much of the sand to prevent troublesome build-up. In addition, extensive research by Ohio State University addressed this exact concern (Water Well Journal, Oct. 1985). Their study revealed that the accumulation of some sand by a Pump Protection Separator actually changes the inflow of water into the well, creating a state of equilibrium that drastically decreases the flow of further sand into the well.

How to Select a Pump Protection Separator

1. Identify your well diameter. 4" and 4.5" wells use a SUB-PAK. 5" wells and larger use SUB-K.
2. Find your pump's flow range. The best fit model is in the middle of the range. DO NOT OVERSIZE. For VFD (constant pressure/variable flow), select based on maximum flow.
3. Verify minimum 30' of water (submergence) above pump during operation. Verify 20' of space below the separator.

Model	Minimum Well I.D.		Flow Range		Weight	
	in	mm	U.S. gpm	m^3/hr	lbs	kg
SUB-8-4-PAK	4*	102*	3 - 8	0.7 - 1.8	9	4
SUB-12-4-PAK	4*	102*	5 - 12	1.0 - 3.0	9	4
SUB-16-4-PAK	4*	102*	10 - 16	2.5 - 3.8	9	4
SUB-28-4-PAK	4*	102*	14 - 28	3.0 - 6.5	11	4
SUB-8-4-K	4*	102*	3 - 8	0.7 - 1.8	9	4
SUB-12-4-K	4*	102*	5 - 12	1.0 - 3.0	9	4
SUB-16-4-K	4*	102*	10 - 16	2.5 - 3.8	9	4
SUB-28-4-K	4*	102*	14 - 28	3.0 - 6.5	11	4
SUB-12-4.5-PAK	4.5*	114*	5 - 12	1.0 - 3.0	9	4
SUB-28-4.5-PAK	4.5*	114*	14 - 28	3.5 - 6.5	11	4
SUB-8-4.5-PAK	4.5*	114*	3 - 8	0.7 - 1.8	9	4
SUB-12-4.5-PAK	4.5*	114*	5 - 12	1.0 - 3.0	9	4
SUB-16-4.5-PAK	4.5*	114*	10 - 16	2.5 - 3.8	9	4
SUB-28-4.5-PAK	4.5*	114*	14 - 28	3.5 - 6.5	11	4
SUB-8-5-K	5	127	3 - 8	0.7 - 1.8	12	5
SUB-12-5-K	5	127	5 - 12	1.0 - 3.0	12	5
SUB-16-5-K	5	127	10 - 16	2.5 - 3.5	12	5
SUB-28-5-K	5	127	14 - 28	3.0 - 6.5	15	7
SUB-52-5-K	5	127	24 - 52	5.5 - 12.0	20	9
SUB-99-6-K	6*	153	48 - 99	11.0 - 22.5	23	10

General Specifications:

- Maximum Particle Size: 1/4 inch (6mm)
- Maximum Particle Concentration: 500 ppm
- Minimum Depth of Well Below Separator Setting: 20 feet (6.1 m)
- Minimum Submergence of Separator: 30 feet (9.2m) below pumping draw down water level

* *NOTE: All -SUB-PAK Models are designed to accommodate the typical pump diameter of 3-3/4 inches (95 mm). Maximum length of pump motor and inlet screen area (combined) cannot exceed 38 inches (965 mm). Consult factory for special requirements and/or application assistance and for other sizes.*

** *Standard Pump Enclosure Shell for this model is 48 inches (1219 mm) long. Shells also available in optional 60-inch (1524 mm), 72-inch (1829 mm) and 84-inch (2134 mm) lengths.*

For 4” and 4.5” Diameter Wells

SUB-PAK

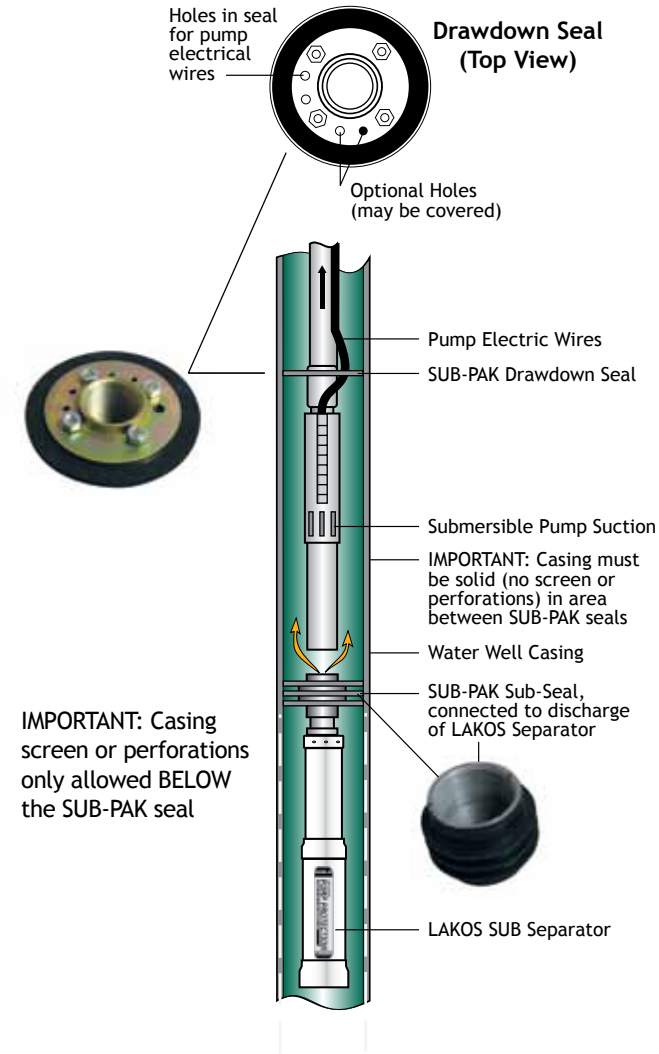

For 5” and Larger Wells

SUB-K

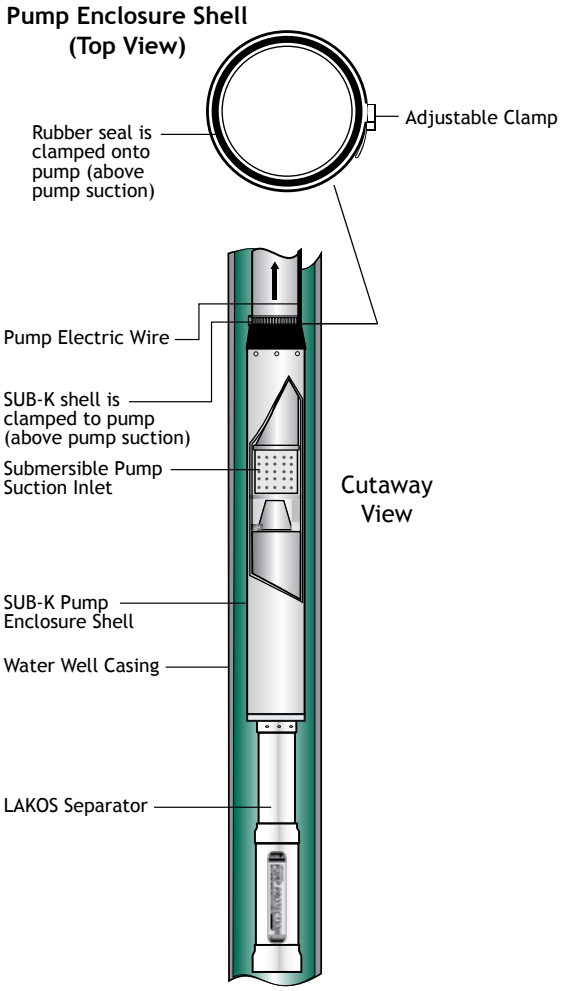

SUB-PAK Seals

Each SUB-PAK Separator includes a Drawdown Seal (attaches to pump outlet) and Sub Seal (attaches to outlet of separator). These replace the SUB-K model Pump Enclosure Shell. Different connection sizes for the Drawdown Seal are provided, depending on the well ID and/or the pump’s riser size. Please note:

- SUB-PAK Separators for 4-inch well ID available with either 1-inch or 1-1/4-inch riser connection to match pump riser size
- SUB-8-4.5-PAK and SUB-12-4.5-PAK Separators for 4-1/2-inch well ID available only with 1-inch riser connection (ask about other options)
- SUB-8-4.5-PAK and larger models for 4-1/2-inch well ID available only with 1-1/4-inch riser connection (ask about other options)

The SUB-Seal (which attaches to the SUB-K Series Separator) has a 2-inch FNPT connection size on all models except SUB-28, which features a 2-1/2-inch FNPT connection size.

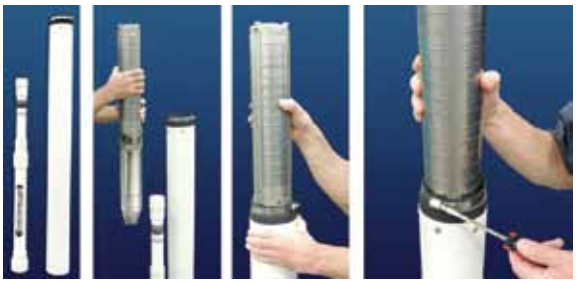

NSF ≤ 0.25% Lead

SUB-08-4-K Pump Protection Separator
SUB-08-5-K Pump Protection Separator
SUB-12-4-K Pump Protection Separator
SUB-12-5-K Pump Protection Separator
SUB-16-4-K Pump Protection Separator
SUB-16-5-K Pump Protection Separator
SUB-28-4-K Pump Protection Separator
SUB-28-5-K Pump Protection Separator
SUB-52-5-K Pump Protection Separator
SUB-99-6-K Pump Protection Separator

Materials of Construction

Separator, Shell and Internal Deflector Plate

PVC composites and ABS. Seal on shell is ethylpropylene rubber with stainless steel clamp.

Flapper Valve

Fabric-reinforced neoprene rubber

Drawdown Seal

Ethylpropylene rubber on a zinc-plated steel coupling. Connection size: 1-inch and 1-1/4 inch female, N.P.T.

Sub Seal

Nitrile rubber on a steel merchant's coupling.

Dimensions

Model	Length of Separator in.	Length of Separator mm
SUB-8-4-PAK*	36.50	927
SUB-12-4-PAK*	36.50	927
SUB-16-4-PAK*	36.50	927
SUB-28-4-PAK*	40.75	1035
SUB-8-5-K	36.50	927
SUB-12-5-K	36.50	927
SUB-16-5-K	36.50	927
SUB-28-5-K	40.75	1035
SUB-52-5-K	43.75	1111
SUB-99-6-K	50.00	1270

Other LAKOS Products

For other solutions, see the complete family of LAKOS Groundwater Filtration Solutions.

For more information go to www.lakos.com and refer to literature LS-847.

Lakos Separators are manufactured and sold under one or more of the following U.S. Patents: 5,320,747; 5,338,341; 5,368,735; 5,425,876; 5,571,416; 5,578,203; 5,622,545; 5,653,874; 5,894,995; 6,090,276; 6,143,175; 6,167,960; 6,202,543; 7,000,782; 7,032,760 and corresponding foreign patents, other U.S. and foreign patents pending.

Installation Specifications

SUB-K

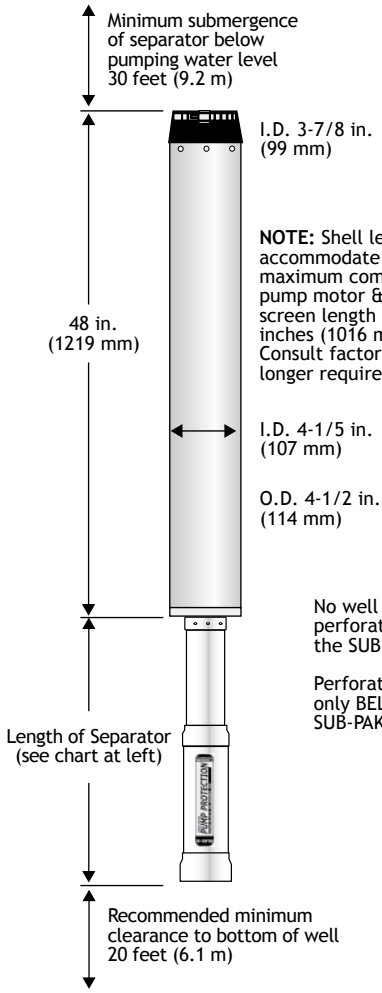

NOTE: Shell length can accommodate a maximum combined pump motor & inlet screen length of 40 inches (1016 mm). Consult factory for longer requirements.

SUB-PAK

4-inch and 4.5-inch wells ONLY

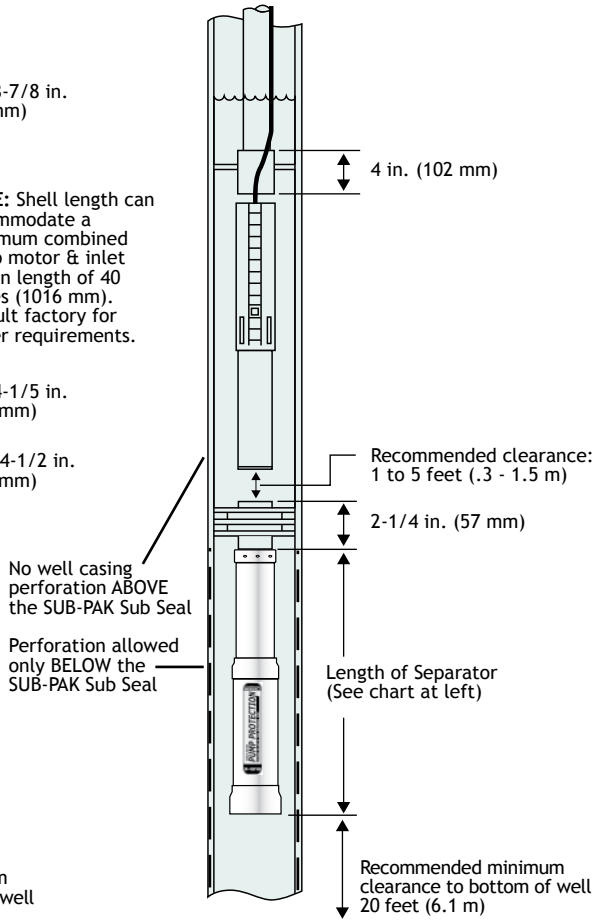

SUB-KOOL Pump Motor Cooling Shroud

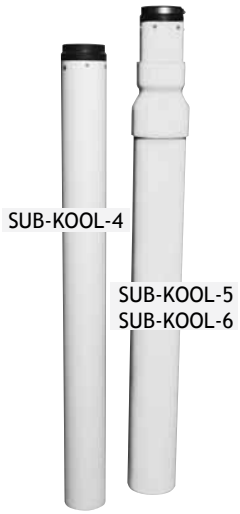

Simple, economical, and effective, the SUB-KOOL shroud is available in three sizes for your pump cooling requirements. All models designed for standard 3-3/4 inch diameter pumps. Select shroud size according to your pump flow requirements.

- Easy to install
- Lightweight
- Corrosion-free composite materials

Model	Length	Inner and Outer Diameter	
SUB-KOOL-4	48 in (1219 mm)	I.D. 4-1/5 in. (107 mm)	O.D. 4-1/2 in. (114 mm)
SUB-KOOL-5	51-3/4 in (1314 mm)	I.D. 4-1/5 in. (107 mm)	O.D. 6-1/8 in. (156 mm)
SUB-KOOL-6	51-3/8 in (1305 mm)	I.D. 4-1/5 in. (107 mm)	O.D. 7-1/2 in. (191 mm)
SUB-KOOL-Custom	Consult Factory		

Printed on recycled paper LS-304V (Rev. 3/15)

LAKOS®
Separators and Filtration Solutions
A wholly owned subsidiary of Lindsay Corporation

1365 North Clovis Avenue
Fresno, California 93727 USA
Telephone: (559) 255-1601
FAX: (559) 255-8093
www.lakos.com
info@lakos.com