TwistIIClean Inline Screen Filters

For Sand, Sediment, Scale, and Light Organics

T2C

Exclusive reverse-flush technology for improved filter cleaning without disassembly or system interruptions. Longer operating cycles. Lower pressure loss.

More Screen Mesh Open Area

TwistIIClean Filters boast twice the open area for greater flow and dirt-handling capacity. Longer operation and less cleaning.

Stainless Steel Screens

Stronger and more durable than common nylon screens for much longer life.

Superior Body Materials

Glass-filled polypropylene gives maximum strength and UV-resistance to degradation, cracking and failure. Clear bowl is acrylic for easy visual inspection to know when cleaning is necessary. Optional SunShield is black stretch-neoprene, provides protection of the screen from algae growth. Top seal is EPDM rubber. Bottom seal at flush port is Viton.

Built-in Tabs for Easy Installation

No need for complicated bracketing. A pair of simple stand-offs and lag bolts (not provided) is all it takes for a secure installation.

Flow Range:
Up to 150 gpm (34 m3/hr)

Maximum Pressure Rating:
100 psi (6.9 bar)

Four Model Sizes: From ¾-inch to 2-inch inlet/outlet.
Inlets/Outlets for 3/4" — 1-1/2" models are NPT male threads; 2" model is flanged.

Automation option for 2-inch model:
Easily attaches/retrofit to any T2C-200 model. Programmable electric actuator. See back cover for details.

Residential Water Wells • Landscape Irrigation • Whole-House Protection
Pre-Filters Water Treatment • Any Pressurized Water System

LAKOS SunShield*

Optional SunShield protects acrylic bowl from discoloring and the internal screen from excessive algae growth when the TwistIIClean Filter is installed in a sunny location. Easily slides on for installation. Easily slides down for inspecting the screen.

**SunShield included with 2-inch model (T2C-200). Available as option for other models for use when installed in sunny locations.*

Patented Reverse Flushing Action

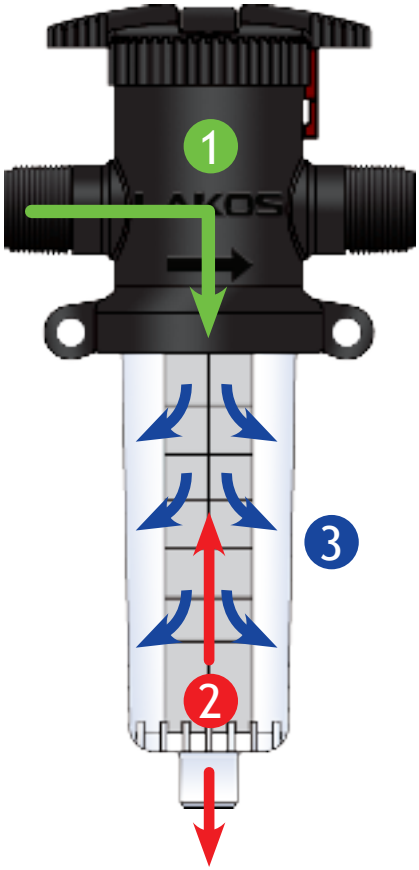

With a 1/4 turn of the handle:

1. Flow direction through the filter element is changed to inside-out.
2. The filter element is lifted to open the bottom flush port.
3. An inside-out backwash occurs, and the filter element is thoroughly cleaned.

TwistIIClean Screen Element Options		
Color of Element	Screen Mesh Size	Common Applications
Brown	30 Mesh	Removal of large particle matter. Pre-filtering ahead of other filters or devices. **Large orifice impact sprinklers.**
White	60 Mesh	Typical **landscape sprinklers. Pre-filter** to fine cartridge filters.
Gray	100 Mesh	Most popular size. Used for **residential systems** and **pre-filtering** before water treatment systems.
Black	140 Mesh	**Drip Irrigation, micro-sprays, spray nozzles, misting systems.**
Blue	200 Mesh	Greatest protection. Often used on **municipal systems.**

General Specifications

TwistIIClean Model Details

Model	Max Flow Rate		Inlet/Outlet Size	Effective Screen Surface Area		Screen Flush Size
	U.S. gpm	m³/hr		in²	cm²	NPT male
T2C-075	25	5.5	3/4 in. male NPT	12.02	77.5	1/2 in.
T2C-100	39	8.9	1 in. male NPT	12.02	77.5	3/4 in.
T2C-150	78	17.7	1-1/2 in male NPT	24.79	159.9	3/4 in.
T2C-200	150	34.0	2 in. flanged	55.5	358.1	3/4 in.

Maximum Pressure: 100 psi (6.9 bar)
Maximum Temperature: 120˚F (49˚C)

Flow vs. Pressure Loss — Clean Water Conditions

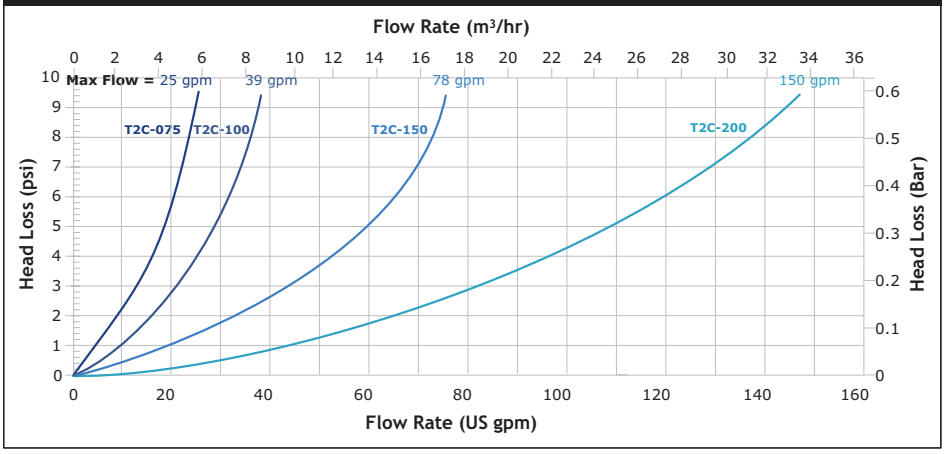

Dimensions

Model	Height		Width		Weight		Weight with Water	
	in	mm	in	mm	lbs	kg	lbs	kg
T2C-075	11-3/4	299	6	152	2	.91	3	1.36
T2C-100	11-3/4	299	6	152	2	.91	3	1.36
T2C-150	15-1/4	387	7-1/2	191	6	2.72	9	4.08
T2C-200	24-23/25	34.0	10.22	260	11	4.99	19	8.62

Drawings

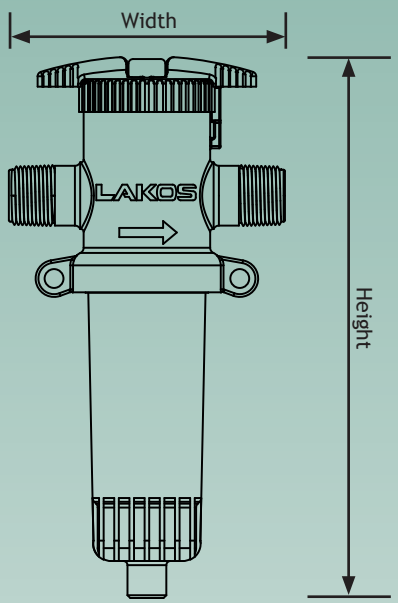

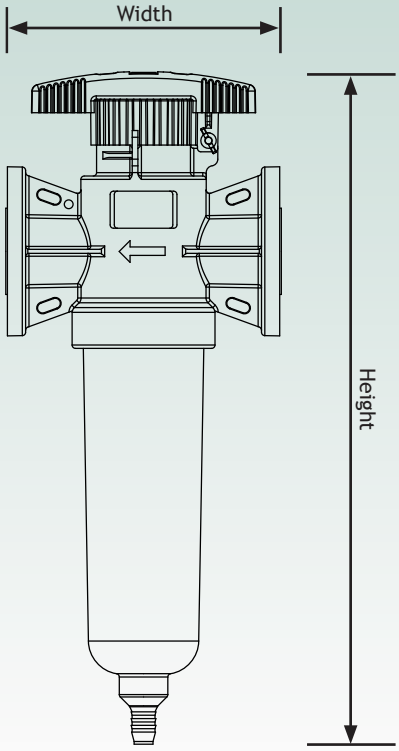

Other LAKOS Filtration Solutions:

LAKOS Sand Separators

Centrifugal-action performance for the removal of sand and settleable particle matter.

LAKOS Pump Protection Sand Separators

Extends the life of submersible and turbine pumps by installing downhole to keep troublesome, abrasive sand from damaging pump impellers, bearings and bowls.

LAKOS Sand Media Filters

Protects drip and micro-spray irrigation systems from suspended particle matter and organics.

LAKOS Self-Cleaning Pump Intake Screens

Continuous rotation and cleaning process keeps pump intakes free of debris and damage when drawing water from surface water sources, such as lakes, canals, ponds and reservoirs.

Limited Warranty

The LAKOS TwistIIClean is warranted to be free of material or workmanship defects for one year from delivery date.

If a fault develops, notify us, giving a complete description of the alleged malfunction. Include the model number(s), date of delivery and operating conditions of subject product(s). We will subsequently review this information and, at our option, supply you with either servicing data or shipping instruction and returned materials authorization. Upon prepaid receipt of subject product(s) at the instructed destination, we will then either repair or replace such product(s), at our option, and if determined to be a warranted defect, we will perform such necessary product repairs or replace such product(s) at our expense. This limited warranty does not cover any products, damages or injuries resulting from misuse, neglect, normal expected wear, chemically-caused corrosion, improper installation or operation contrary to factory recommendation. Nor does it cover equipment that has been modified, tampered with or altered without authorization. No other extended liabilities are stated or implied and this warranty in no event covers incidental or consequential damages, injuries or costs resulting from any such defective product(s).

TwistIIClean Auto

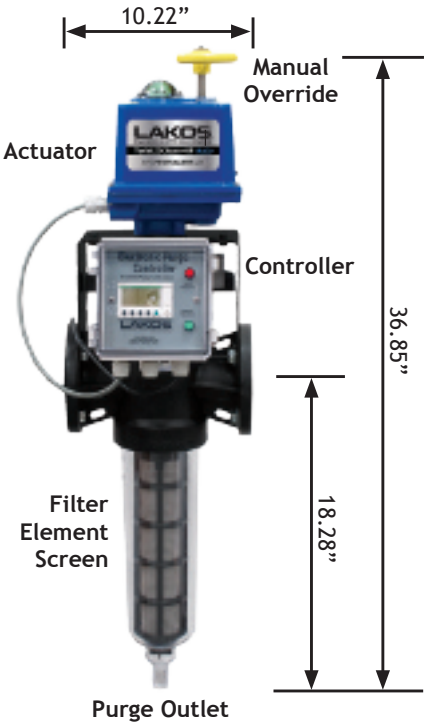

For remote installations and/or applications where manual cleaning is not reasonable or possible, T2C-Auto offers an effective, automatic option.

Flow Range:
Up to 150 U.S. gpm (34 m^3/hr)

Maximum Working Pressure:
100 psi (6.9 bar) at 120°F (49°C)

Maximum Temperature:
120°F (49°C)

Required Power:
115 VAC, 60 Hz

Reliable LCD programming and durable actuation for timer-based reverse-flush operation

- Provides sure, maintenance-free operation. Eliminates manual error and assures routine cleaning to maximize filter efficiency
- Multiple flush cycle and duration options. Default setting is every 3 hours for 32 seconds. Range of cycle settings (longer and shorter) and flush durations (longer only) available
- Electronic actuation, requires 115 VAC, 60 Hz power input
- Fail-Safe option available, including battery back-up to ensure flush cycle closes valve to avoid excessive water waste
- Manual override and clearly visible open/close indicators
- Wall-mount and safety guard included

Printed on recycled paper LS-904 (4/15)

LAKOS®
Separators and Filtration Solutions
A wholly owned subsidiary of Lindsay Corporation

1365 North Clovis Avenue
Fresno, California 93727 USA
Telephone: (559) 255-1601
FAX: (559) 255-8093
www.lakos.com
info@lakos.com

Lakos Separators are manufactured and sold under one or more of the following U.S. Patents:

5,320,747; 5,338,341; 5,368,735; 5,425,876; 5,571,416; 5,578,203; 5,622,545; 5,653,874; 5,894,995; 6,090,276; 6,143,175; 6,167,960; 6,202,543; 7,000,782; 7,032,760 and corresponding foreign patents, other U.S. and foreign patents pending.