SmartPurge™

Advanced Purge Sensor Technology

LAKOS SMARTPURGE™

SmartPurge™ Sensor detects solids level within a LAKOS Separator and activates automated purge. More efficient purge cycles leads to labor and energy savings and reduced downtime.

Features and Benefits:

- Vibrating blade senses changes in solids level within LAKOS Separator, activating purge
- Detects solids with specific gravity 2.6 and up
- Durable 304 stainless steel construction for long life
- Separator purges only when required, reducing energy costs, fluid loss, and maintenance time
- User adjustable purge times
- Status indicator light
- Works with all LAKOS purge valves
- Failsafe mode to warn of improper operation

SPECIFICATIONS:

Maximum Temperature: *176°F (80°C)*
Maximum Pressure: *145 psi (10 bar)*
Controller Power Requirements : *100-240 V, 50/60 Hz*
Controller: *CUL 508c Listed*
Contact Ratings: *5 AMP, 120/240 VAC*
NEMA/TYPE : *4X, IP 66*

The First Smart Separator Purge System Has Arrived.

Fully Automated SmartPurge™ System

- *SmartPurge™ Sensor*
- *Controller*
- *Purge Valve**

**Works with any LAKOS purge valve*

LAKOS SMARTPURGE™

How It Works

The SmartPurge™ has a vibrating blade that stops vibrating when it is covered by accumulated solids in the collection chamber of the LAKOS Separator.

An electronic circuit then activates a relay indicating the purge level has been reached.

An automated purge valve opens for a pre-programmed duration, and the solids are purged.

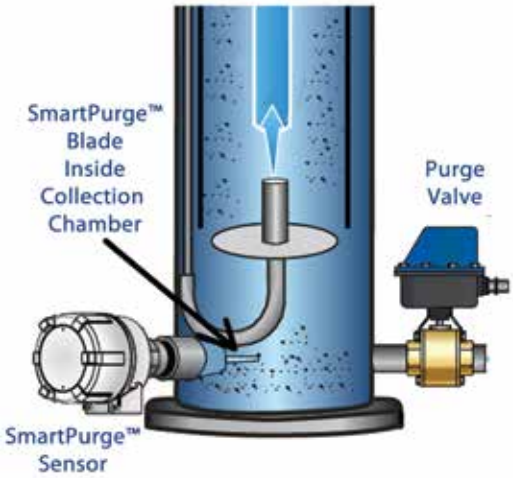

Compatible Purge Valves

ABV Valve

APP Valve

AFS Valve

AKE Valve

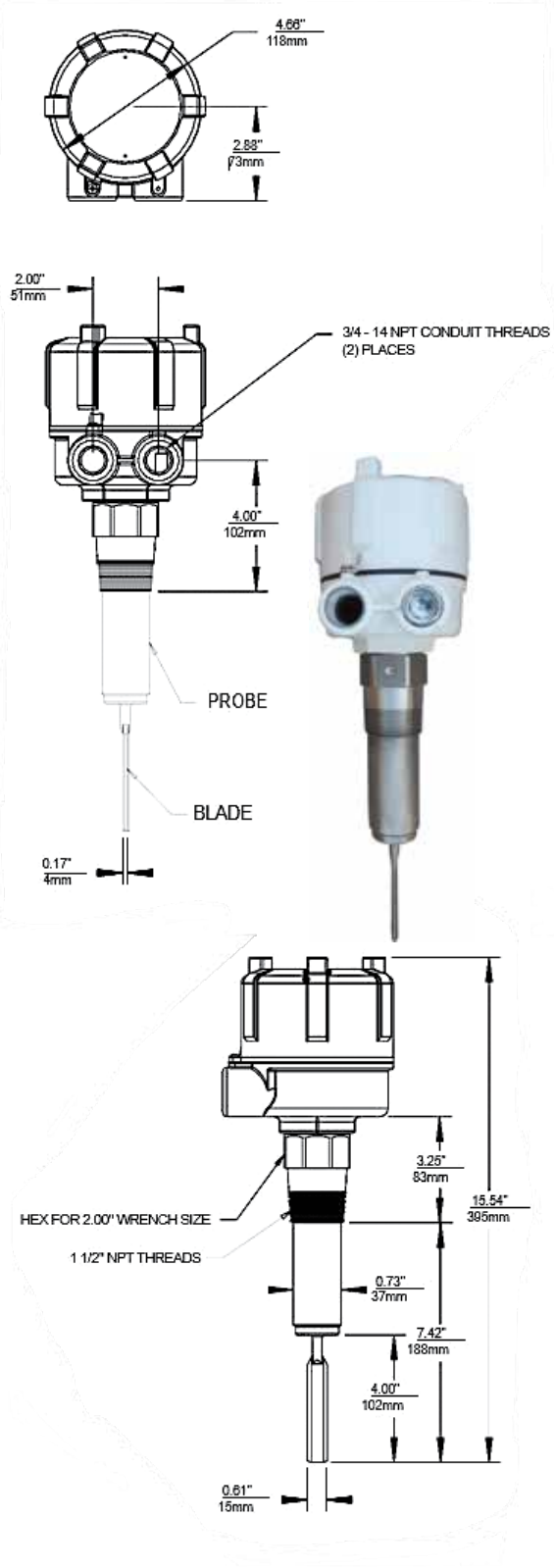

SmartPurge™ is a registered trademark of Claude Laval Corporation

LS-972 (10/14)

LAKOS Separators and Filtration Solutions

1365 North Clovis Avenue
Fresno, CA 93727 USA
www. lakos.com

Tel: 1.559.255.1601

info@lakos.com