Sand Separators for Municipal Waterworks Systems

PWC

LAKOS PWC Sand Separators employ centrifugal action to remove settleable sand, grit and scale from pumped water.

Performance – rated to remove 98% of all sand-like particle matter 200 mesh (74-micron), 2.6 specific gravity and larger in a single pass

NSF/ANSI standard 61 and Annex G

No moving parts to wear out. Eliminates mechanical failures and need for replacement parts

Swirlex internal accelerating slots for optimum performance; patented technology

Vortube for enhanced solids separation/collection; patented technology

No backwashing; Periodic purging (automatic) eliminates downtime, routine maintenance, and system depressurization - See page 2

Low and steady pressure loss - See page 3

Space-saving vertical profile or streamlined low profile provides options to best fit any installation limitations - See pages 4 and 5

For variable-flow systems, two or more separators can be manifolded and controlled via pressure-sensing instrumentation or other techniques - See page 6

Third-party tested and documented - See page 7

ANSI-flanged inlet/outlet connections

LAKOS PWC Sand Separators are certified to NSF/ANSI standard 61 and Annex G

PWC-1040-L	PWC-1060-L
PWC-1040-V	PWC-1060-V
PWC-1050-L	PWC-1080-L
PWC-1050-V	PWC-1080-V

Series Flow Range:
225 - 2050 U.S. gpm
(51 – 465 m^3/hr)
Higher/variable flow rates available, see page 6

Maximum Pressure Rating:
150psi (10.3 bar) at 180°F (82°C)

PWC Series include glycerin-filled inlet/outlet pressure gauges with petcock valves

Automatic heavy-duty purge valves available

How it Works
Model Specs
Low-Profile and Vertical Profile
High-Flow and Variable Flow
Independent Testing
Sample Specifications
Additional Products

LAKOS®
Separators and Filtration Solutions

Automatic Purging

LAKOS Automatic Purge valves ensure solids are purged routinely with zero downtime and no manpower requirements. Zero water loss purge options and solids recovery purge options available.

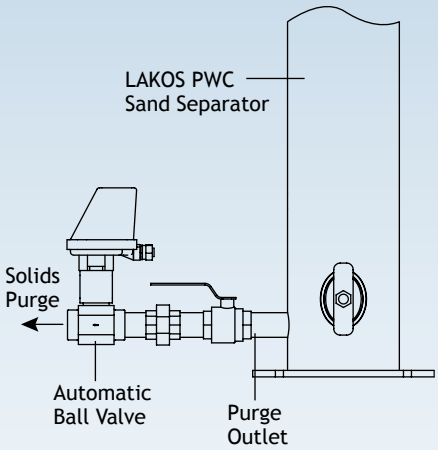

How It Works

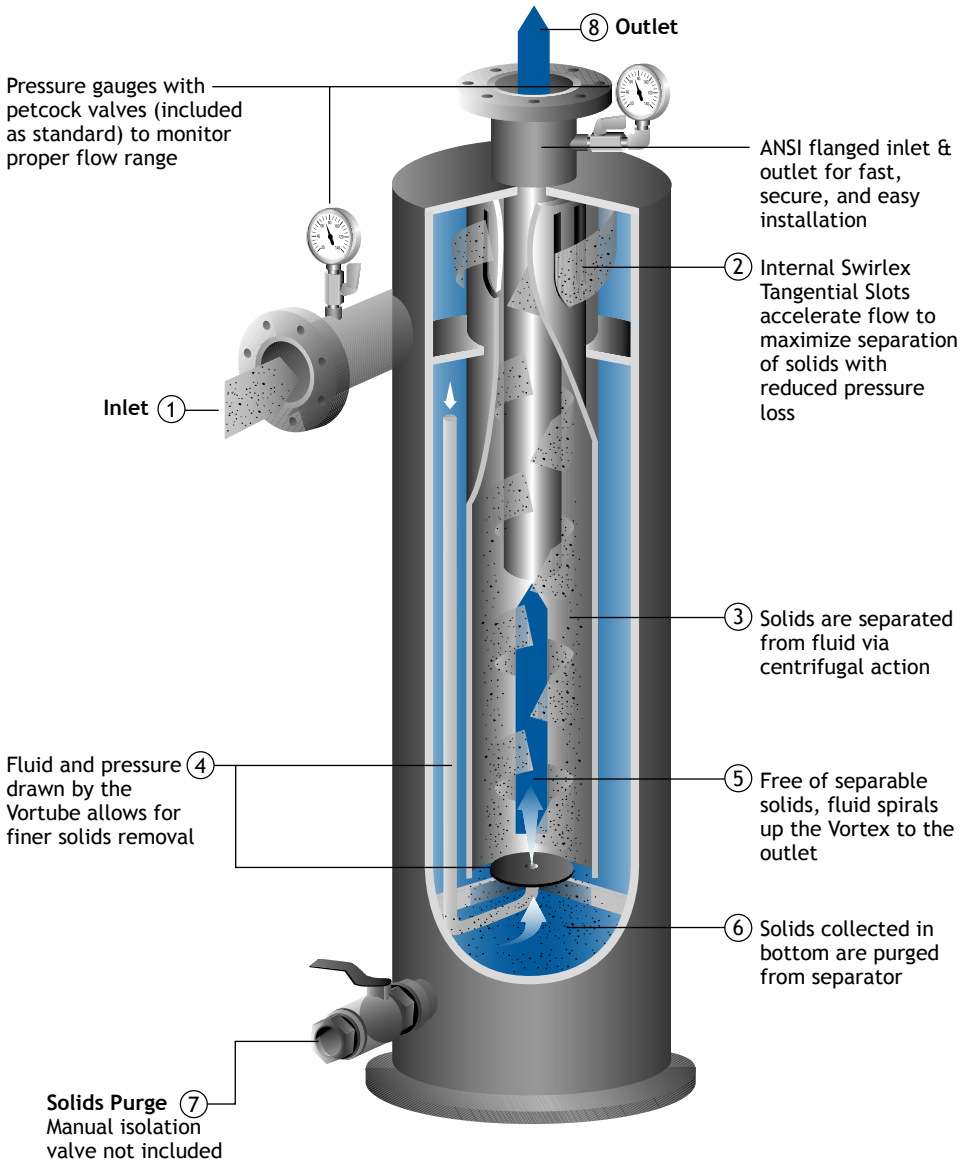

Performance

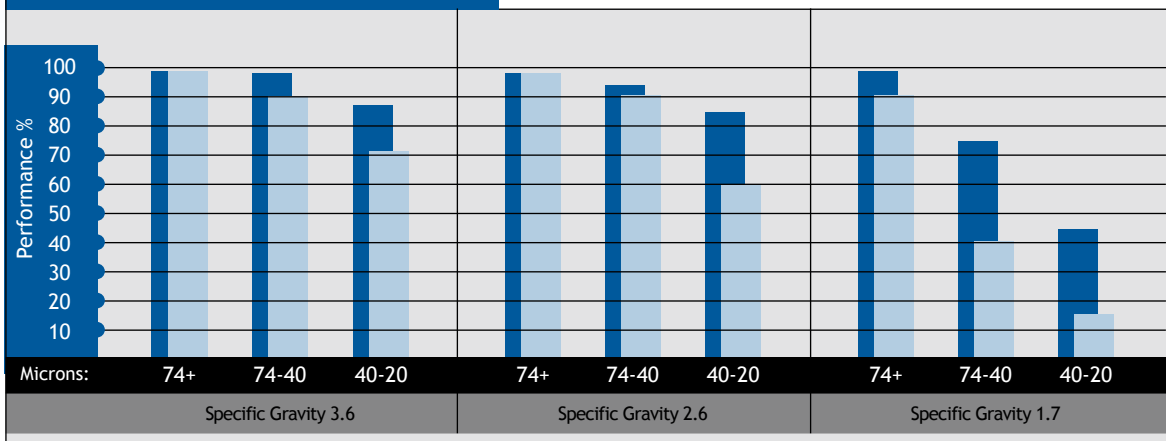

Lakos Separators are manufactured and sold under one or more of the following U.S. Patents: 5,320,747; 5,338,341; 5,368,735; 5,425,876; 5,571,416; 5,578,203; 5,622,545; 5,653,874; 5,894,995; 6,090,276; 6,143,175; 6,167,960; 6,202,543; 7,000,782; 7,032,760 and corresponding foreign patents, other U.S. and foreign patents pending.

Specifications

Flow range is critical for model selection. Do not use flange size.

Model*	Flow Range** U.S. gpm	Flow Range** m³/hr	Inlet/Outlet ANSI Flange	Purge Size Male N.P.T.	Collection Chamber Capacity gal	Collection Chamber Capacity liters	Weight Empty lbs.	Weight Empty kg	Weight with Water lbs	Weight with Water kg
PWC-1040-L	225-525	51-119	4 inch	1-1/2"	0.8	3.1	547	248	889	403
PWC-1040-V					1.6	5.9	495	224	815	370
PWC-1050-L	305-800	69-181	6 inch	1-1/2"	0.7	2.5	775	351	1394	632
PWC-1050-V					3.0	11.2	752	341	1370	621
PWC-1060-L	480-1275	109-289	6 inch	1-1/2"	1.3	4.8	1108	502	2304	1045
PWC-1060-V					6.4	24.3	1103	500	2297	1042
PWC-1080-L	820-2050	186-465	8 inch	1-1/2"	2.1	8.1	1694	768	3858	1750
PWC-1080-V					7.8	29.4	1689	766	3757	1704

* Models ending with "L" are low profile; "V" are vertical profile

** Flow range is critical to separator performance. Do not oversize separator or use pipe size for model selection

See page 6 for higher flow rates and variable flow systems

Maximum pressure rating: 150psi (10.3 bar) at 180°F (82°C); consult factory for higher pressure requirements
Pressure loss range: 2 - 15 psi (.13 - 1.03 bar)
Maximum particle size: .375 inch (9mm)
Material (standard carbon steel): Domes - A285C/516 GR70, .25 inch (6 mm) minimum thickness.
Other parts: A-36, A-53B or other quality grade, .25 inch (6mm) minimum thickness;
Special coatings and other materials available - consult factory
Exterior Powder Coating: Spray-on Medium Gray
Sample specifications available online at http://pwc.lakos.com
Installation and Operation Manual included with product, available online and upon request

PWC Sand Separators are certified NSF/ANSI standard 61 and Annex G

PWC-1040-L
PWC-1040-V
PWC-1050-L
PWC-1050-V
PWC-1060-L
PWC-1060-V
PWC-1080-L
PWC-1080-V

Visit http://pwc.lakos.com for more information about our NSF-61 Certification

Additional specification options:
- ASME Code
- Welding X-Ray Certification
- Leak Test Certification

Consult factory for other requirements

Flow vs. Pressure Loss

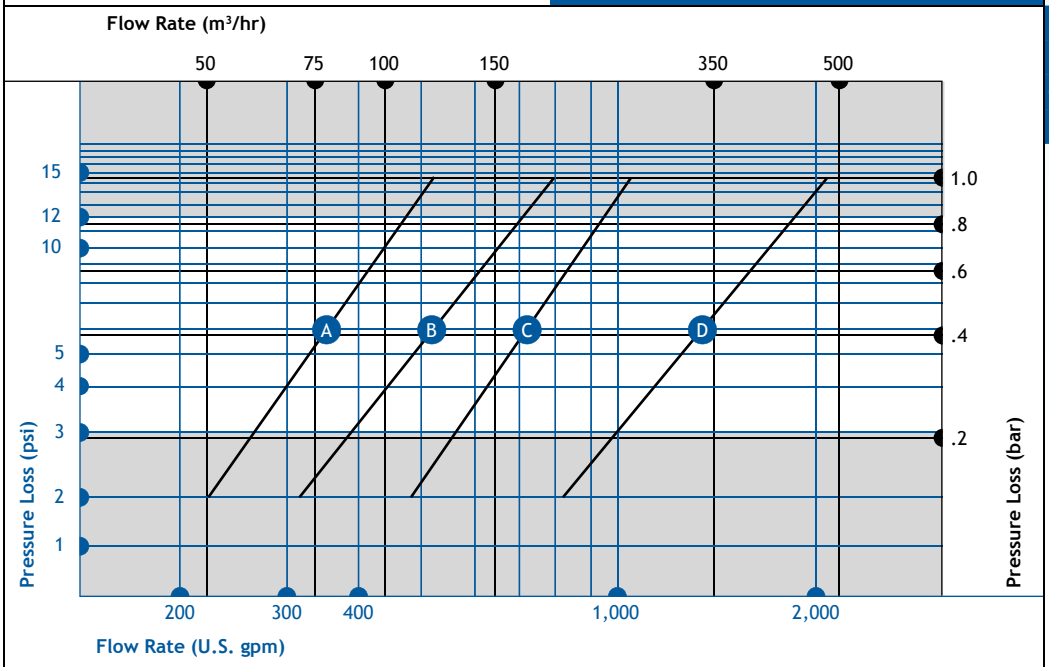

A PWC-1040
B PWC-1050
C PWC-1060
D PWC-1080

Low Profile

Inlet/Outlet Pressure Gauges with Petcock Valves (1)

Included as standard; install at both inlet and outlet for proper flow verification (see “Flow vs. Pressure Loss”, page 3)

Inspection Plug (2)

1" NPT female; provides access to upper chamber for inspection of slot area

Hand-Hole Inspection Port (3)

Provides access to collection chamber

Lifting Rings (4)

For installation purposes

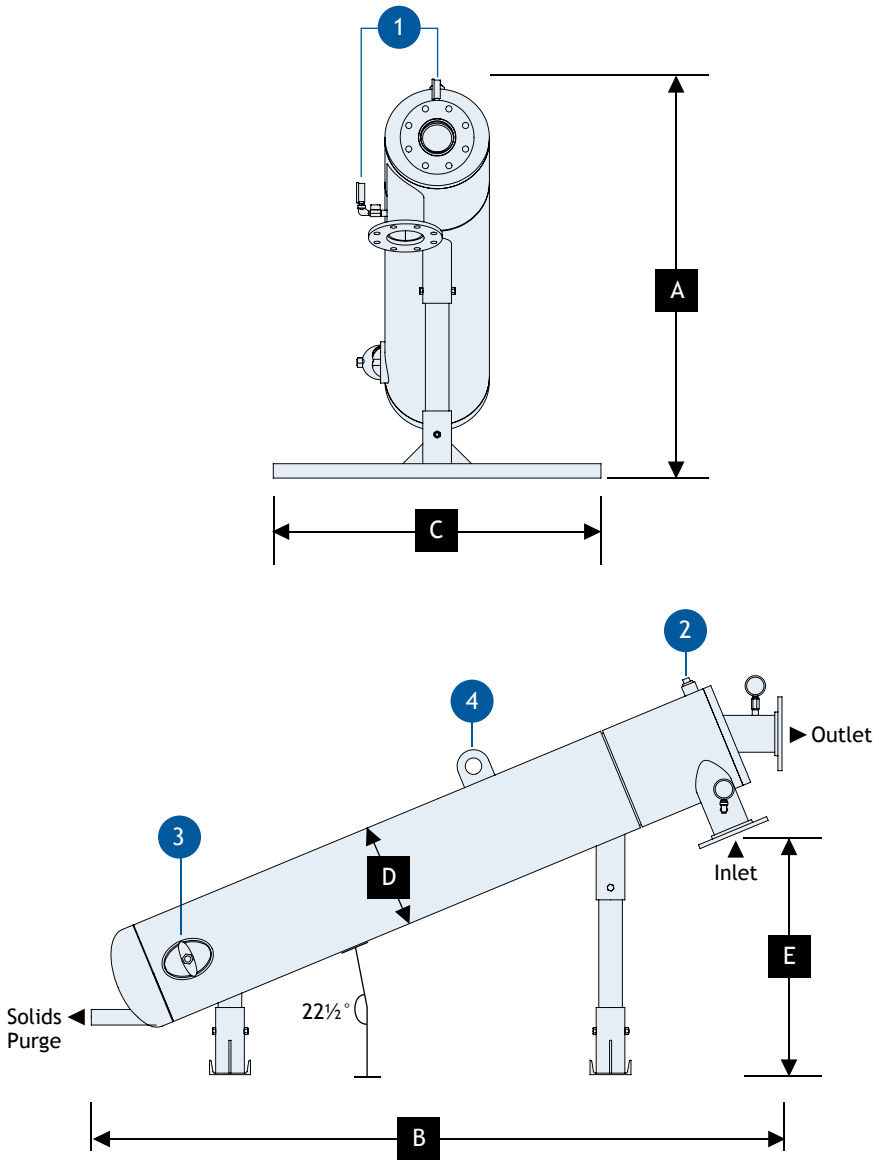

Dimensions

Model	A in	A mm	B in	B mm	C in	C mm	D in	D mm	E in	E mm
PWC-1040-L	48	1230	84	2142	40	1016	13	324	29	745
PWC-1050-L	54	1393	93	2374	40	1016	16	406	33	840
PWC-1060-L	66	1687	112	2845	40	1016	20	508	39	1011
PWC-1080-L	80	2037	138	3523	40	1016	24	610	49	1251

Dimensions for reference only. Consult factory when pre-plumbing.

Vertical Profile

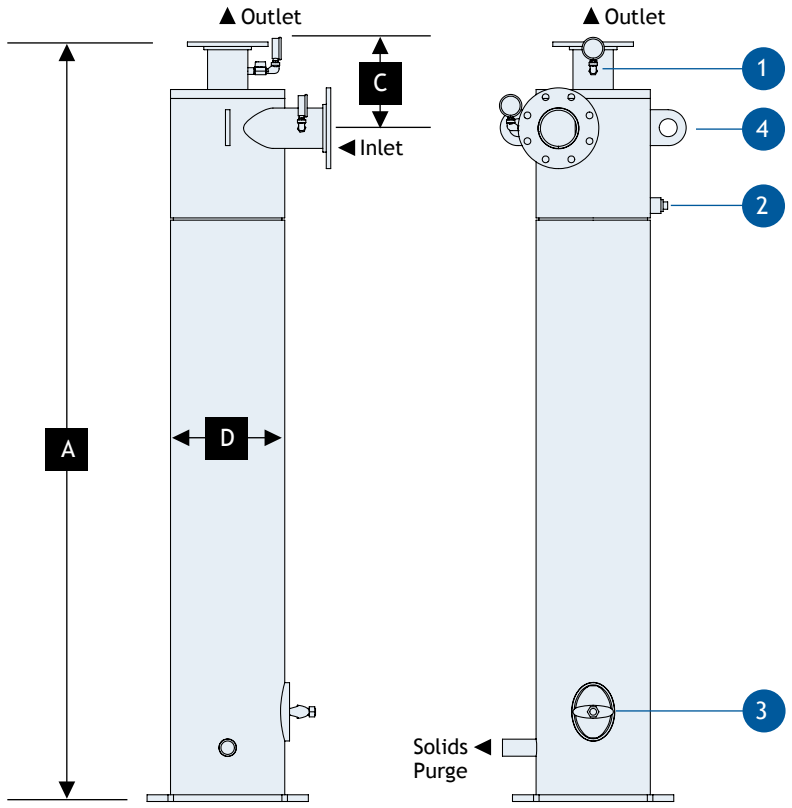

1 Inlet/Outlet Pressure Gauges with Petcock Valves

Included as standard; install at both inlet and outlet for proper flow verification (see "Flow vs. Pressure Loss", page 3)

2 Inspection/Drain Plug

1" NPT female; provides access to upper chamber for inspection of slot area; also allows for draining the upper chamber if necessary

3 Hand-Hole Inspection Port

Provides access to collection chamber

4 Lifting Rings

For installation purposes

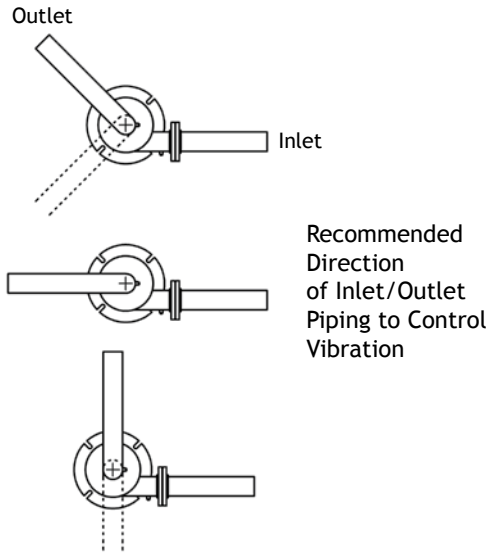

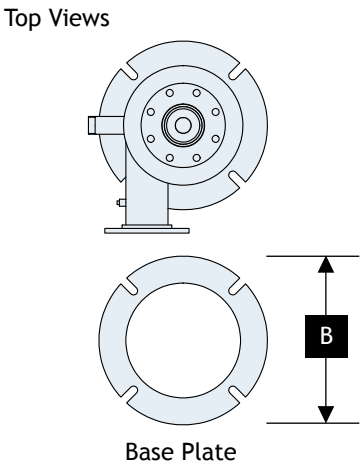

Dimensions

Model	A		B		C		D	
	in	mm	in	mm	in	mm	in	mm
PWC-1040-V	85	2151	18	457	10	244	13	324
PWC-1050-V	101	2581	22	559	11	284	16	406
PWC-1060-V	122	3115	26	660	11	284	20	508
PWC-1080-V	144	3661	32	813	13	333	24	610

Dimensions for reference only. Consult factory when pre-plumbing.

Maintenance/Purging

1. LAKOS PWC Sand Separators must be purged regularly to remove the separated solids from the temporary collection chamber.

2. All purge hardware should be installed prior to any elbows or turns in the purge piping. Avoid "uphill" purging, which can clog purge piping and hinder effective solids evacuation.

3. For best results, purging is recommended while the LAKOS PWC Sand Separator is in operation, utilizing system pressure to enhance solids evacuation.

4. LAKOS provides a full selection of rugged, durable automatic purging and solids-handling systems to optimize the performance of your separation system. CAUTION: Light-duty valves typically fail quickly in the harsh/abrasive environment of solids purging.

5. Be sure to include an isolation valve prior to the automatic valve (available from LAKOS at an additional cost) in order to facilitate servicing of the automatic valve without system shutdown.

High Flow

Manifolding in Parallel for High Flow Rates

When water system flow rates exceed that of any single LAKOS Separator, manifolding two or more units together can help achieve large flow requirements. LAKOS can assist with separator manifold design and manufacturing for high flow rate applications. Manifolding multiple units keeps units smaller, easier to install and provides for future flow rate changes.

Example: Three PWC-1080 Sand Separators increase flow range to 2,460 - 6,150 U.S. gpm (558 - 1395 m^3/hr)

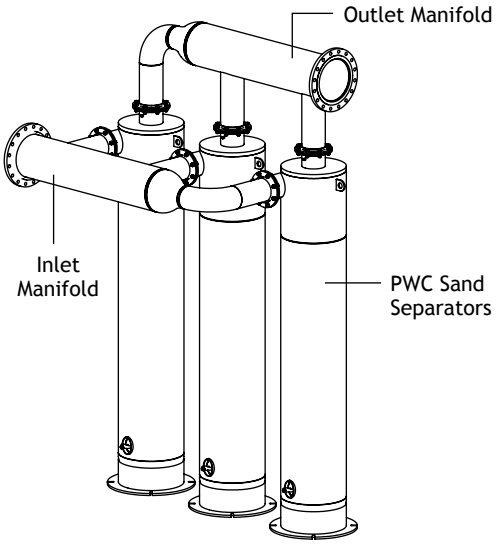

Variable Flow

Controls for Variable Flow Rates

Varying flow rates can be accommodated by employing flow-sensitive controls to open and close valves – bringing multiple separators in and out of service to meet system flow demands. Illustration below suggests automated technique using a programmed PLC connected to magnetic flow meter for control feedback.

Example: Three PWC-1050 Sand Separators can accommodate variable flow from 305 - 2,400 U.S. gpm (69 - 543 m^3/hr)

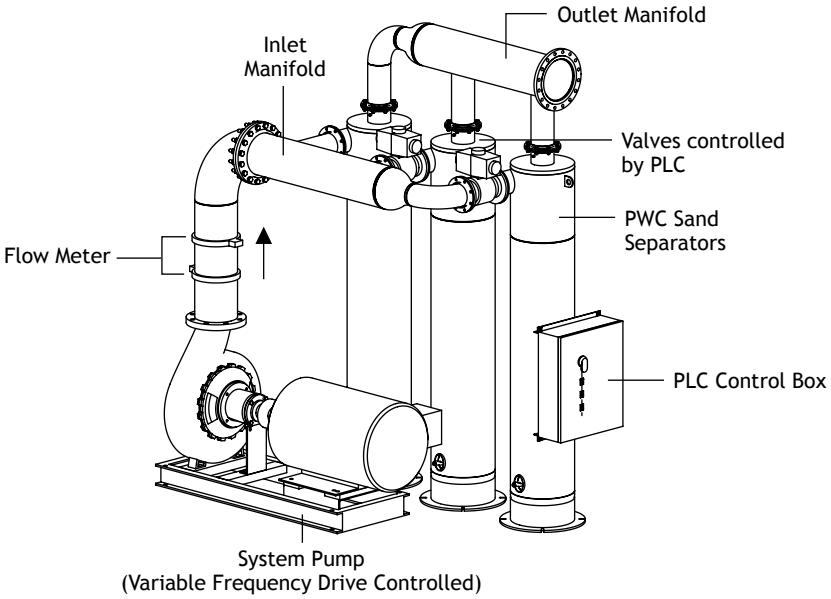

LAKOS PWC-1040 Sand Separator has been tested by a certified, independent test agency International Center for Water Technology (ICWT), confirming its performance and capability to remove troublesome particle matter from pumped water.

Test Conditions

The diagram below details the test stand and flow schematic for testing the LAKOS PWC-1040. The following conditions were in effect for purposes of recording the test results:

System pressure	50 psi
Flow rate through the separator	500 US gpm
Pressure loss through the separator	13.3 psid

The sand sample injected into the system upstream of the PWC Separator via the sand injection tube (see schematic details below) was quartz-silicon dioxide by Powder Technology, Inc. The particle sizes and blend was the following:

Mesh Size	**Sand Sample Size**
75-106 mesh:	47.404 grams
106-150 mesh:	48.001 grams
150-200 mesh:	45.706 grams
Total sample size:	**141.111 grams**

After injection of the sand sample and a reasonable time for the sample to single-pass through the test stand, sand was recovered from the separator and from the ring filter downstream from the separator. The following measurements were recorded:

Sample recovered from the PWC Separator	132.365 grams
Sample recovered from the downstream filters	2.395 grams
Total of sample recovered	134.760 (95.5% recovered)

Separator Efficiency: 98.22% sand removal

NOTE: This information is available in original report form on the test agency's letterhead and/or in a LAKOS Performance Guarantee Document upon request. (See LS-024)

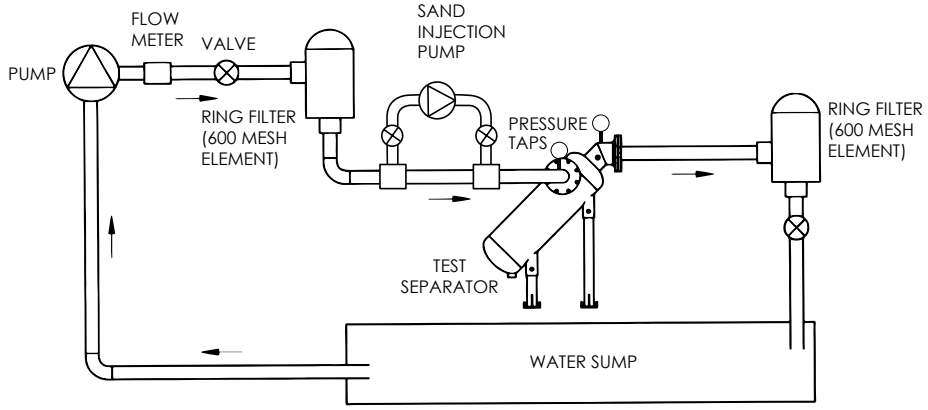

International Center for Water Technology

For over 30 years, the internationally recognized ICWT/CIT Testing Laboratories have been providing independent, third-party product performance testing to a wide range of irrigation and other industries around the world. Experience with hydraulics, pumps, filters, valves and fluid component testing provides manufacturers, distributors and end-users with accurate performance data for applicability assessments and to enable product development.

Engineering and industry experience underscores the capabilities of the ICWT/CIT staff and facilities. Practical knowledge and established methodologies assure that published results are reliable and realistic for the purpose of product evaluation and application suitability.

The ICWT/CIT Testing Laboratories test to recognized standards and specifications such as ANSI (American National Standards Institute), ASABE (American Society of Agricultural and Biological Engineers), ASTM International, HI (Hydraulic Institute), IA (Irrigation Association), ISO (International Standards Organization) as well as to city, state and local specifications.

More information about the testing agency and testing process can be found at www.californiawater.org.

This test agency is available and approachable to confirm its test methodologies and results.

International Center for Water Technology
California State University Fresno
5370 North Chestnut Ave
Fresno, CA 93740-0018
Phone: 559-278-2066
www.californiawater.org

Limited Warranty

All products manufactured and marketed by this corporation are warranted to be free of defects in material or workmanship for a period of at least one year from date of delivery. Extended warranty coverage applies as follows:

All LAKOS PWC Sand Separators: Five year warranty

All other components: 12 months from date of installation; if installed 6 months or more after ship date, warranty shall be a maximum of 18 months from ship date.

If a fault develops, notify us, giving a complete description of the alleged malfunction. Include the model number(s), date of delivery and operating conditions of subject product(s). We will subsequently review this information and, at our option, supply you with either servicing data or shipping instruction and returned materials authorization. Upon prepaid receipt of subject product(s) at the instructed destination, we will then either repair or replace such product(s), at our option, and if determined to be a warranted defect, we will perform such necessary product repairs or replace such product(s) at our expense.

This limited warranty does not cover any products, damages or injuries resulting from misuse, neglect, normal expected wear, chemically-caused corrosion, improper installation or operation contrary to factory recommendation. Nor does it cover equipment that has been modified, tampered with or altered without authorization.

No other extended liabilities are stated or implied and this warranty in no event covers incidental or consequential damages, injuries or costs resulting from any such defective product(s).

1365 North Clovis Avenue
Fresno, California 93727 USA
Telephone: (559) 255-1601
FAX: (559) 255-8093
www.lakos.com
info@lakos.com
http://pwc.lakos.com

Sample Specifications and Drawings

For more information on LAKOS PWC Series Sand Separators, including:

- Complete specifications in both Microsoft Word and Simple Text format
- Complete drawings in both PDF and DWG formats
- Complete Installation & Operations Manual
- Product brochure in PDF format
- Automatic purge valve product brochures
- Independent testing report on ICWT letterhead
- Link to NSF-61 compliance
- Links to other LAKOS applications and products

Visit http://pwc.lakos.com

Additional Products

ILB Series
Low-Flow Centrifugal Separators

Flow rates from 3 - 290 U.S. gpm (.7 - 66 m^3/hr). NSF-low lead certified. Refer to LS-289

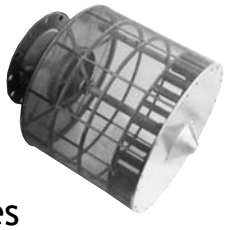

ISF Series
Self-Cleaning Pump Intake Screens

Flow rates up to 2,700 U.S. gpm (up to 615 m^3/hr). Keeps unwanted surface water debris out of pump intake. Refer to PC-125

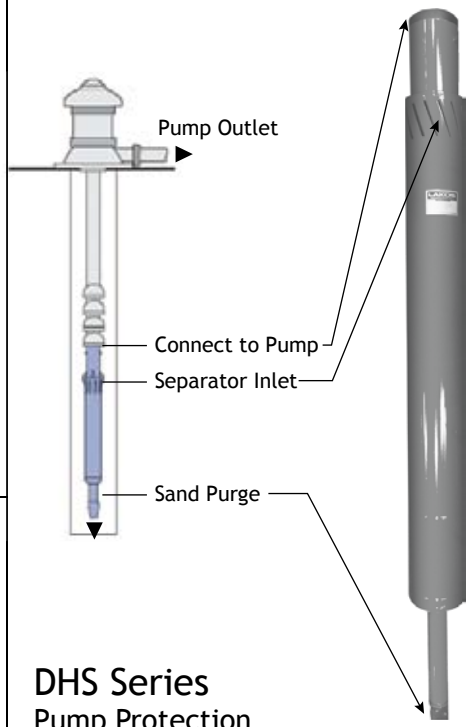

DHS Series
Pump Protection
DownHole Sand Separators

Flow rates from 100 - 3,180 U.S. gpm (23 – 723 m^3/hr). Extends pump life by 4x or more. Refer to LS-739

Printed on recycled paper LS-850 (10/12)

LAKOS®
Separators and Filtration Solutions