Filtration Handbook

In the following pages you will find the basic principles of filtration illustrated and explained using simple examples.

For filtration and hydraulics specialists requiring more detailed information, we recommend downloading our complete filtration handbook (www.hydac.com).

If you have any questions about the contents of this brochure or if you have a specific problem to solve, we will be happy to help you in person. Please contact your nearest HYDAC representative or contact our headquarters.

Awareness of fluids

As a manufacturer or operator of machines or systems in today's fast moving and globalized market in Central Europe, every possible means must be taken to continually improve competitiveness.

In the first instance, this implies reduction in costs, not only of the purchase cost but of all costs generated during the **whole lifetime** of the system (life cycle cost reduction).

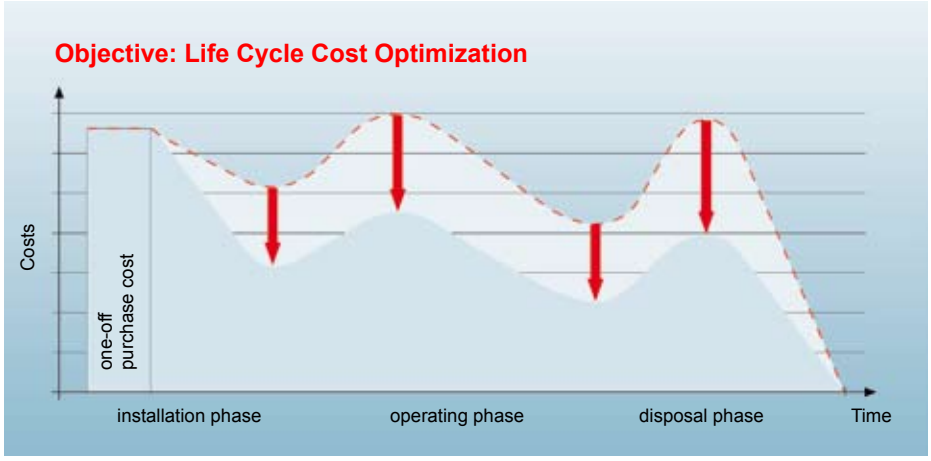

The condition of the operating fluid plays a key role in this objective since approximately **70 % of all breakdowns of hydraulic and lubrication systems can be attributed to the condition of the oil** - with proven detrimental effects on the efficiency and profitability of systems and equipment.

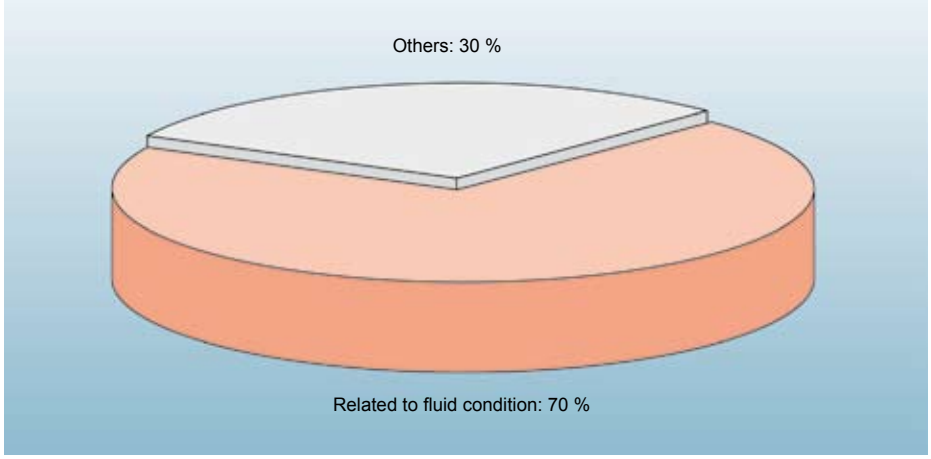

Causes of breakdowns in hydraulic and lubrication systems

Once the direct connection between fluid condition and the profitability and efficiency of hydraulic and lubrication systems is recognized, the action required becomes obvious: cooling, continuous online conditioning and a well-engineered filtration concept guarantee the efficiency and operating reliability of the whole system.

Although this filtration handbook - as the name suggests - deals primarily with the "filter" component, HYDAC experts will also provide you with modern solutions which are specific to your system in the areas of cooling and condition monitoring.

Only by taking a holistic approach is it possible to improve the condition of the fluid used and to reduce the Life Cycle Costs.

As HYDAC's hydraulic experts, we want to focus attention on **fluid awareness** and we would like to share our experience with you. The following pages relate to filtration, but we can also help you in relation to cooling and condition monitioring if required.

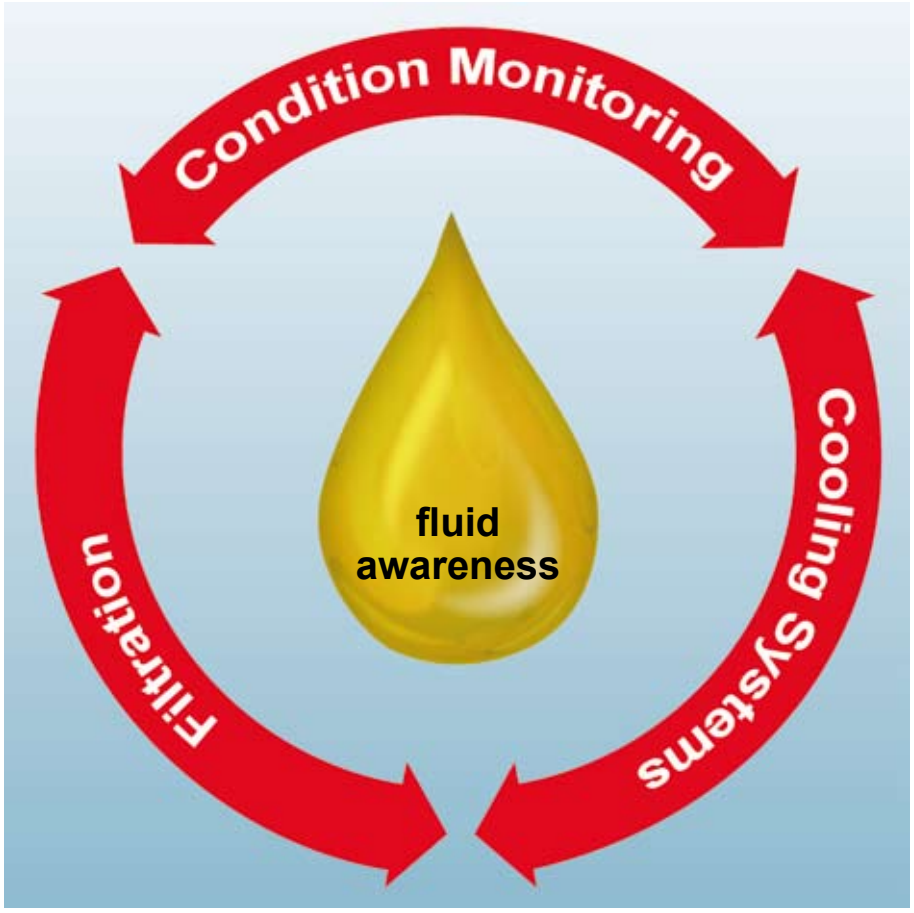

Why is filtration so important?

The selection of the perfect filtration solution contributes significantly to preventing damage caused by contamination, to increasing the availability of the system and therefore to increasing productivity considerably.

The new filter element technology Betamicron®4 has been specially developed for the reduction of the Life Cycle Cost. The previous glass fibre elements from HYDAC (Betamicron®3 generation) provided complete security: a high level of fluid cleanliness and long-term stability for your hydraulic or lubrication system.

The new generation goes one better: with further improvements to the performance data the elements with Betamicron®4 technology ensure the highest fluid cleanliness. By optimizing the filter media structure both the separation performance and the contamination retention capacity have increased to a large extent. This means that sensitive components are protected over the long term and the filter element has a significantly longer service life.

Furthermore, even fluids with extremely low conductivity can be filtered without electrostatic discharge taking place within the filter element, due to a special feature on the filter mesh pack. This is another benefit therefore in the area of operating reliability and gives HYDAC the cutting edge in the area of element innovation.

The table below summarizes the positive effect of the new element technology, Betamicron®4, on the Life Cycle Cost of your machine or system.

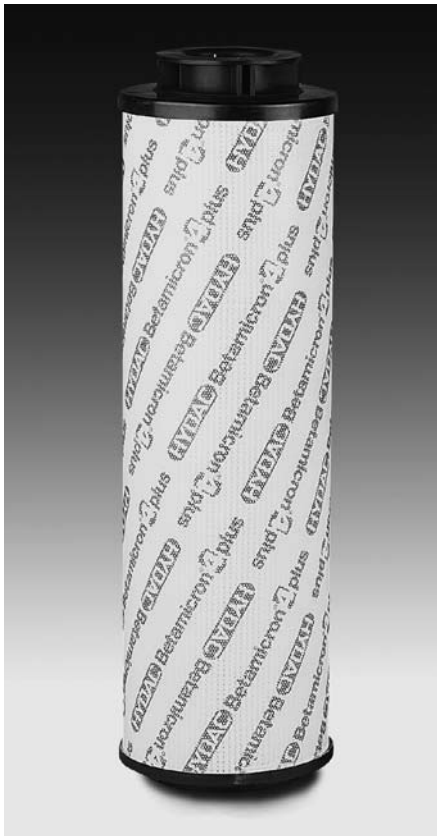

		Optimized mat structure	Optimized longitudinal seam	Zinc-free structure	Spiro lock seam support tubes	Protective envelope	Discharge capability
		minimized					
Energy	cost	●					
Personnel	cost	●	●			●	●
Logistics	cost			●	●		
Failure	cost	●	●	●		●	●
Production	cost	●	●				●
Repair	cost	●	●	●		●	●
Maint enance	cost	●	●	●		●	●
Spare parts	cost	●	●	●		●	●
Waste disposal	cost				●		

More detailed information such as technical specificatons and customer benefits can be found in the brochure **"Filter Elements Betamicron®4. For Reduced Life Cycle Cost".**

What kinds of damage does contamination cause?

Contamination has a detrimental effect on the functions of hydraulic and lubricating fluids, e. g. transfer of heat and energy, right up to system failure.

From subsequent damage analyses approx. 75 % of system failures can be attributed to damage to the components used, caused by contamination of the operating fluid.

Causes of contamination

What are the causes of contamination and which mechanisms can lead to a rise in the above-mentioned costs?

The following illustration indicates possible contamination sources:

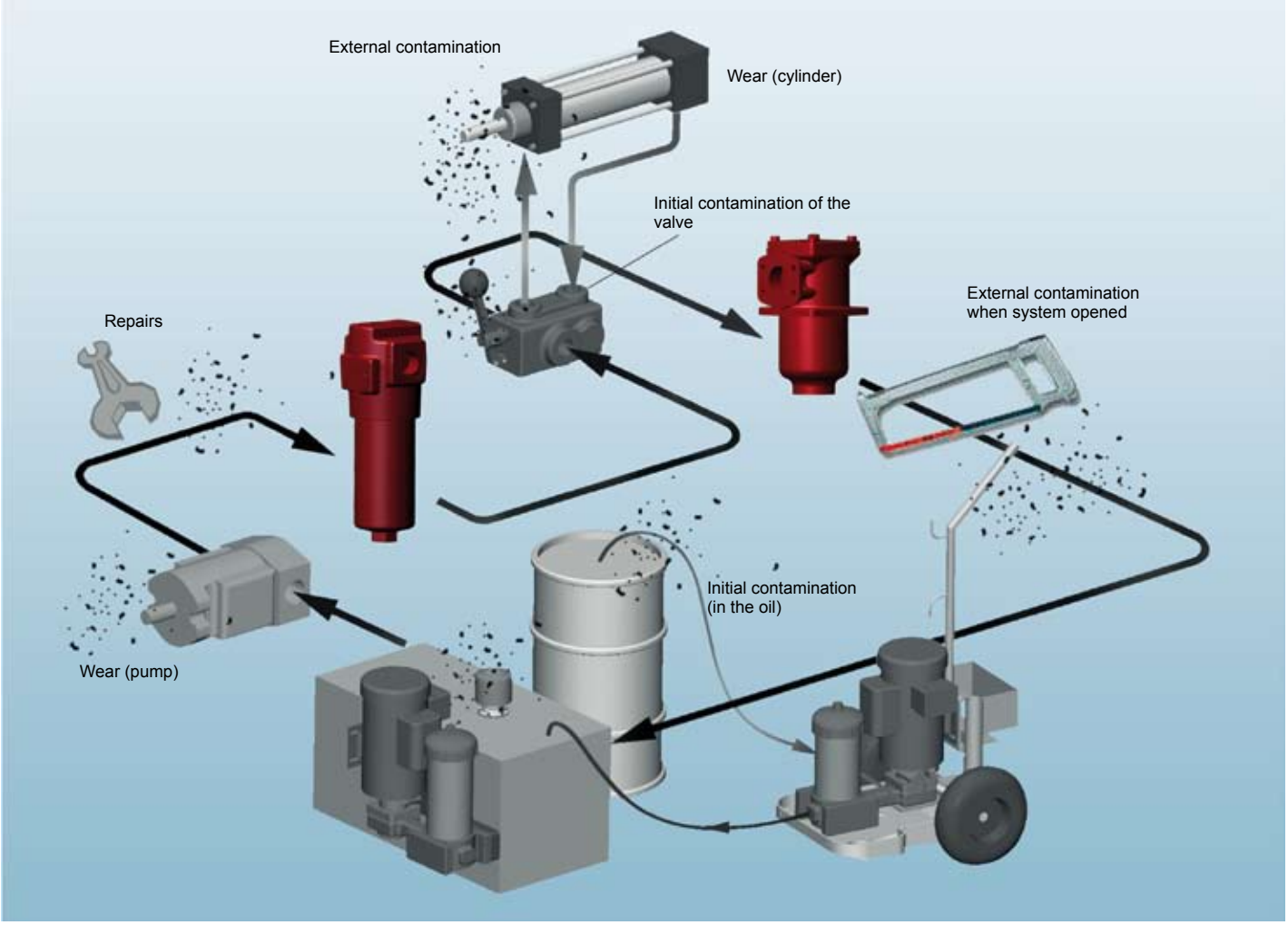

Origin / formation of contamination:

- Built-in contamination from components fitted (e.g. valves, fluids, cylinders, pumps, tanks, hydraulic motors, hoses, pipes)
- Contamination produced during assembly of the system, by opening the system, during system operation and during fluid-related system failure
- Contamination entering from outside the system, through:
  - tank breathing
  - cylinders, seals
- Contamination entering the system during maintenance procedures
  - system assembly
  - opening the system
  - filling with oil

If the usually expensive components are damaged by solid contamination in the hydraulic and lubricating media, system faults right up to unplanned shutdowns can occur.

The severity of the component damage depends on the material of the contamination, the operating type V02, must be fitted (round or sharp-edged) and on the size and quantity of particles.

The following rule applies: The harder the particles, the greater the component damage and the higher the operating pressure the more forcefully the particles become lodged in the lubrication clearance.

It often goes unrecognized that the majority of these solid particles is smaller than 30 µm and they are therefore not visible to the naked eye. This means an apparently clean fluid can in fact be badly contaminated.

Particularly critical are particles which are the same size as the clearance between moving parts.

What makes it worse is that hydraulic users are always stipulating smaller and lighter, high-performance components which reduces the clearances even further.

In the following diagrams you will find the typical clearances.

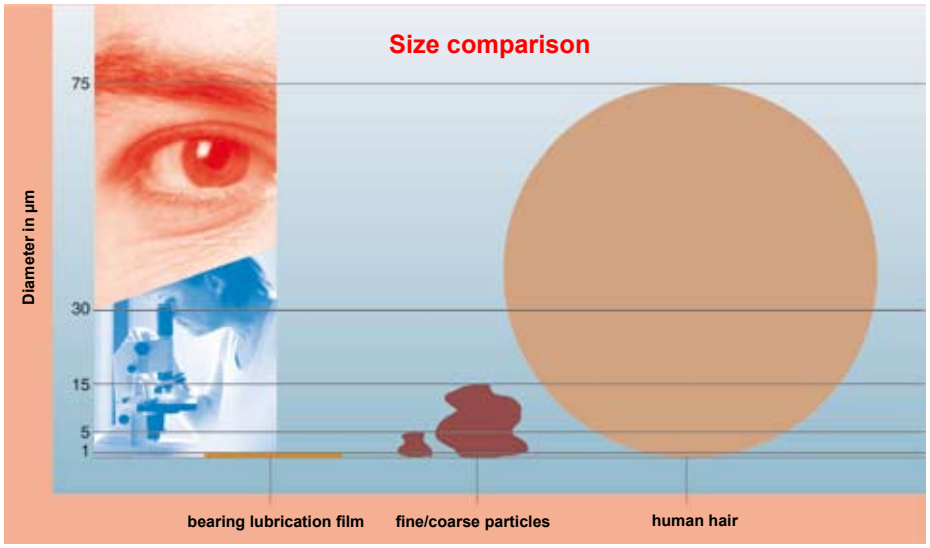

On hydraulic pumps:

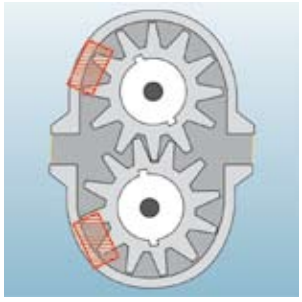

Gear pump
Dynamic clearance

Tooth to side panel: 0.5-5 µm
Tooth point to housing: 0.5-5 µm

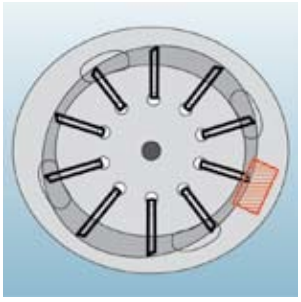

Vane pump
Dynamic clearance

Vane rim: 5-13 µm
Vane duct: 0.5-1 µm

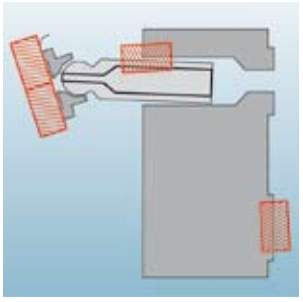

Piston pump
Dynamic clearance

Piston to bore: 5-40 µm
Valve plate to cylinder: 0.5-5 µm

On valves:

Servo valve	1-4 µm
Proportional valve	1-6 µm
Direction control valve	2-8 µm

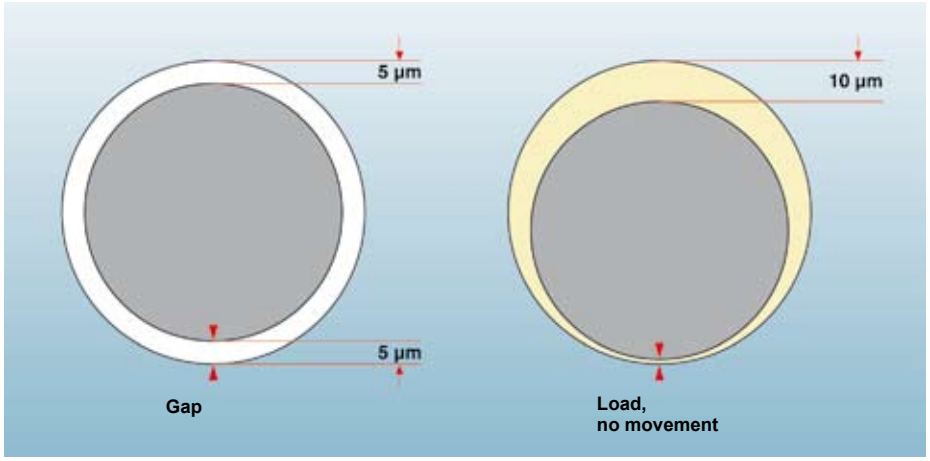

The operational or dynamic lubricating film is not the same as the machine clearance and is dependent on the force, speed and viscosity of the lubrication oil.

Therefore the lubricating film separates the moving surfaces in order to prevent metal-to-metal contact.

Components	Clearance (µm)
Slide bearing	0.5-100
Ball bearing	0.1-3
Hydrostatic ball bearing	1-25

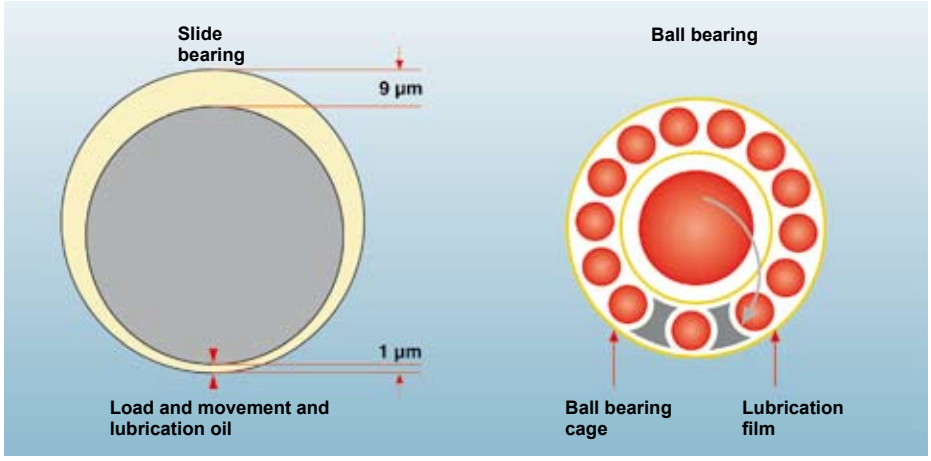

What types of wear are there?

1. Abrasion
by particles between adjacent moving surfaces.

2. Erosion
by particles and high fluid velocity.

3. Adhesion
from metal-to-metal friction (loss of fluid).

4. Fatigue wear
surfaces damaged by particles are subjected to repeated stress.

5. Corrosion
by water or chemicals (not covered below).

Effects of wear in the case of a hydraulic cylinder:

Rod seal wear
➡ External oil leakage

Guide bush wear
➡ Loss of rod alignment

Piston seal wear
➡ Loss of cylinder speed
➡ Loss of holding ability

Piston bearing wear
➡ Loss of rod alignment

1. Abrasion

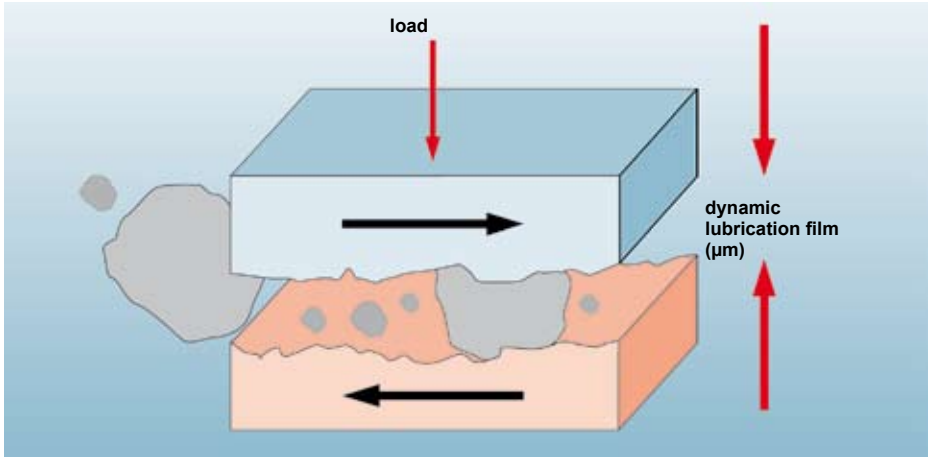

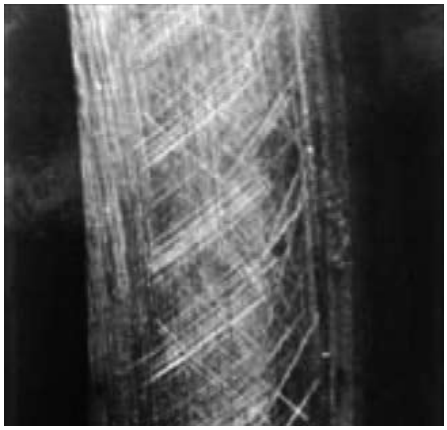

Abrasion caused by foreign bodies

Effects of abrasion:
- Changes to tolerances
- Leakages
- Reduced efficiency
- Particles produced in the system create more wear!

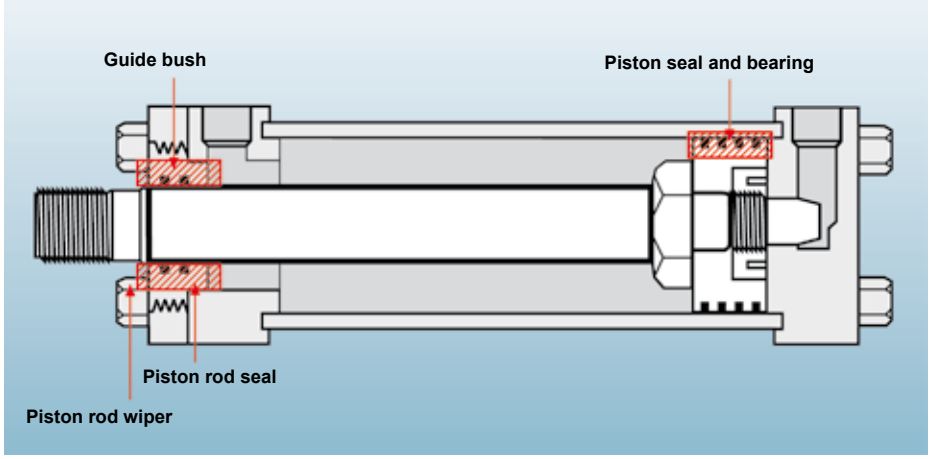

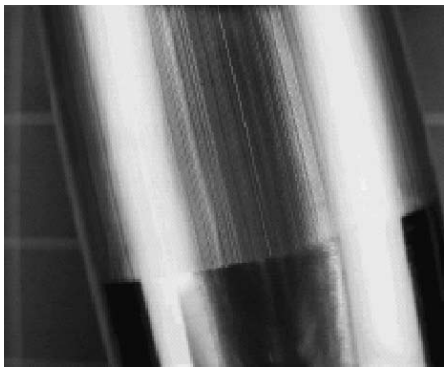

Damaged cylinder piston

Effect of erosion:

The high velocity of the fluid forces existing particles against the corners and edges of the system.
Other coarse and fine particles therefore become detached from the surface and there is a gradual attack on the surfaces in the system.

2. Erosion

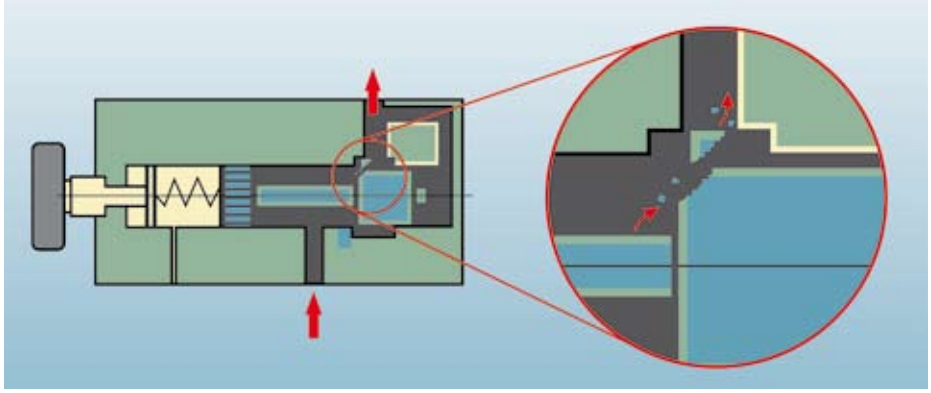

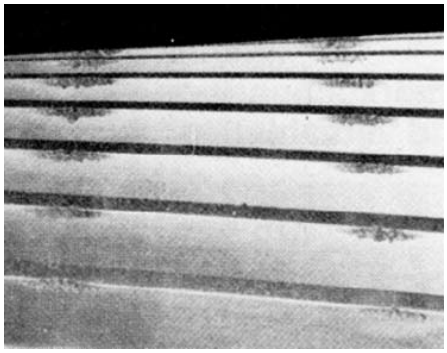

Erosion damage on the cog wheel

Effect of adhesion:

Low speed, excessive load and/or a reduction in fluid viscosity can reduce the oil film thickness.
This can result in metal-to-metal contact, and also possible shearing.

3. Adhesion

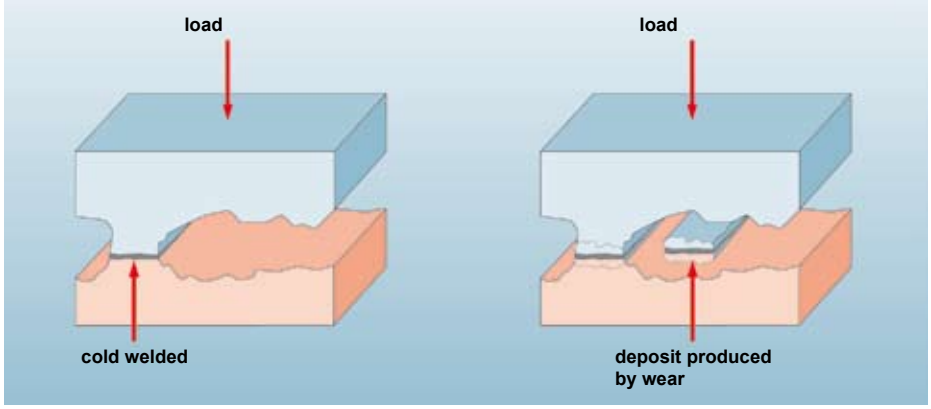

Adhesion on ball bearing

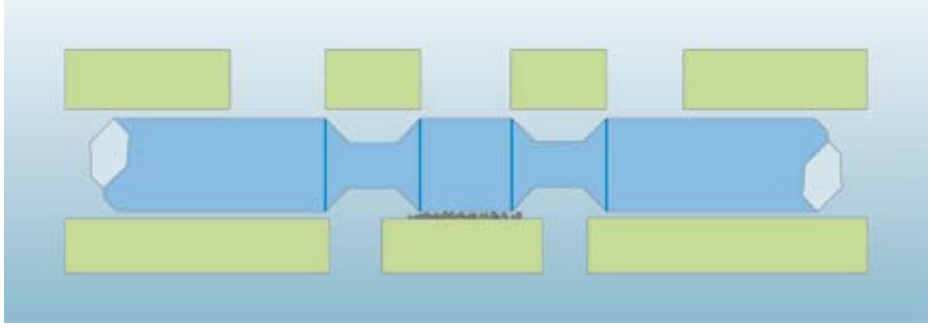

The smallest cracks in the surface are hollowed out causing material to break off, therefore creating new particles. This action causes an increase in wear.

4. Surface fatigue

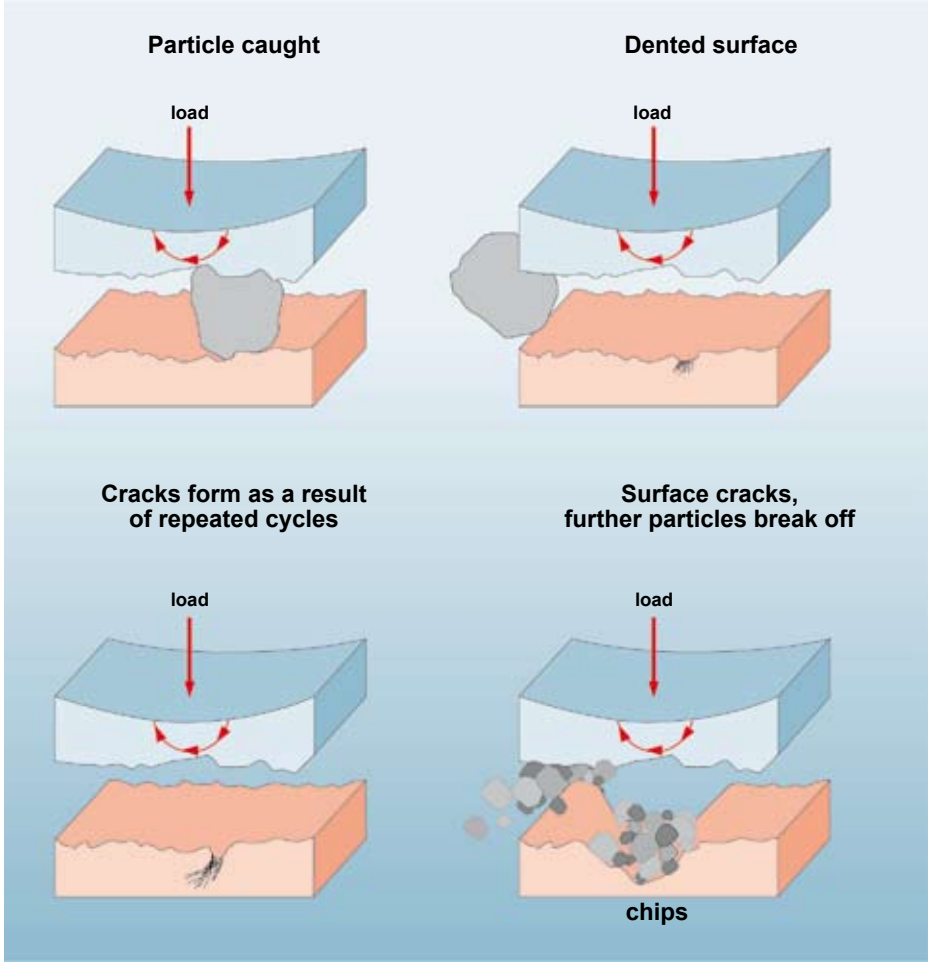

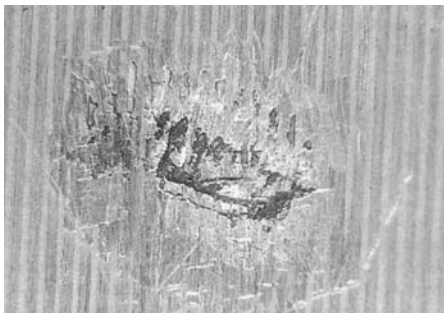

Surface fatigue on ball bearing

How clean should the fluid be?

Classification of the solid particle contamination

The classification of solid particle contamination in lubrication and hydraulic fluids follows ISO 4406/1999.

To determine the cleanliness level the solid particles present in 100 ml fluid are counted, sorted according to size and quantity and classified into particle ranges.

Depending on the method of particle counting, there are 2 or 3 ranges:

Particle counting method	Particle sizes (Code no.)		
Automatic particle counter	> 4 $\mu m_{(C)}$	> 6 $\mu m_{(C)}$	> 14 $\mu m_{(C)}$
Microscopic counting	---	> 5 µm	> 15 µm

The ISO Code can be "translated" into a maximum particle quantity for each particle size range with the aid of the adjacent table.

This code is specified for each size range.

The oil cleanliness level determined by electronic particle counters is expressed as a combination of three numbers, e.g. 21/18/15; the particle quantity determined by microscopic counting is expressed as a combination of two numbers, e.g. -/18/15.

ISO Code	Particle quantity/100ml	
(to ISO 4406)	from	to
5	16	32
6	32	64
7	64	130
8	130	250
9	250	500
10	500	1000
11	1000	2000
12	2000	4000
13	4000	8000
14	8000	16000
15	16000	32000
16	32000	64000
17	64000	130000
18	130000	260000
19	260000	500000
20	500000	1000000
21	1000000	2000000
22	2000000	4000000
23	4000000	8000000
24	8000000	16000000
25	16000000	32000000
26	32000000	64000000
27	64000000	130000000
28	130000000	250000000

Determined using...

...electronic particle counter

21 / 18 / 15
>4µmc >6µmc 14µmc

...microscopic counting

– / 18 / 15
>5µmc 15µmc

Typical cleanliness level:

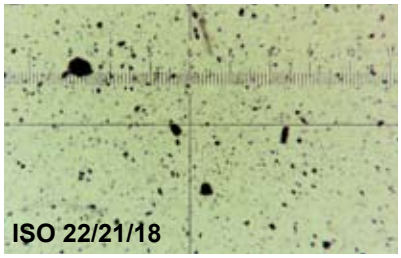

New oil, delivered in drums

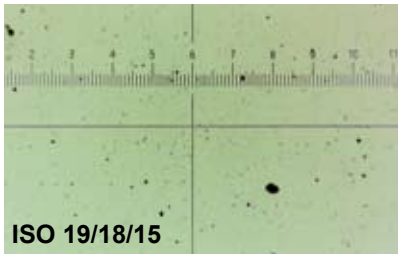

New oil, delivered in road tanker

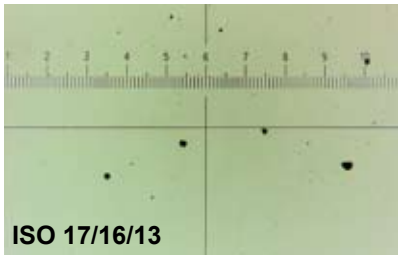

New oil, delivered in mini-container

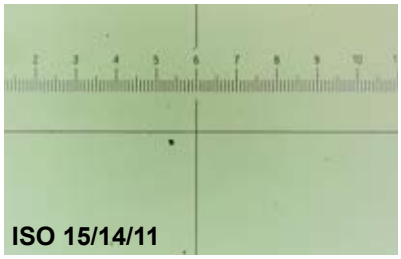

required for modern hydraulic systems

Cleanliness requirements for lubricating and hydraulic components

The cleanliness level in lubricating and hydraulic systems is determined by the most sensitive component.

Numerous manufacturers of components for lubrication, industrial and mobile hydraulics specify the optimum cleanliness requirements for their components. More heavily contaminated fluids can lead to a significant reduction in service life of those components. Therefore we recommend contacting the particular manufacturer for written recommendations concerning the cleanliness of the fluid.

In the case of warranty claims, this information is important in order to reject claims for damages. If the component manufacturers do not have specific data concerning the required cleanliness level available, the following table can be used:

Type of system/Area of application/ Components	Recommended cleanliness class
Systems with servo hydraulics sensitive to fine contamination	15/13/10
Industrial hydraulics ● Proportional technology ● High pressure systems	17/15/12
Industrial and mobile hydraulics ● Solenoid control valve technology ● Medium pressure and low pressure systems	 18/15/12 19/16/14
Industrial and mobile hydraulics with low requirement for wear protection	20/18/15
Forced-feed circulatory lubrication on transmissions	18/16/13
New oil	21/19/16
Pumps/Motors ● Axial piston pump ● Radial piston pump ● Gear pump ● Vane pump	 18/16/13 19/17/13 20/18/15 19/17/14
Valves ● Directional valves ● Pressure valves ● Flow control valves ● Check valves ● Proportional valves ● Servo valves	 20/18/15 19/17/14 19/17/14 20/18/15 18/16/13 16/14/11
Cylinders	20/18/15

The cleanliness levels shown in the table are based on an operating pressure from 100 to 160 bar, a normal level of ambient contamination and normal system availability.

Therefore the following criteria must be taken into account when determining the required cleanliness levels of the fluid:

		Correction factor for the recommended cleanliness
Operating pressure	less than 100 bar more than 160 bar	1 class worse 1 class better
Expected life expectancy of the machine	up to 10 years over 10 years	no correction 1 class better
Repair and spare part costs	high	1 class better
Stoppage costs due to shutdown	up to 10,000 €/hr. over 10,000 €/hr.	no correction 1 class better
Pilot system (system which significantly affects the manufacturing process or cycle)		1 class better

What kind of filters are there and when are they used?

Installation location of filters

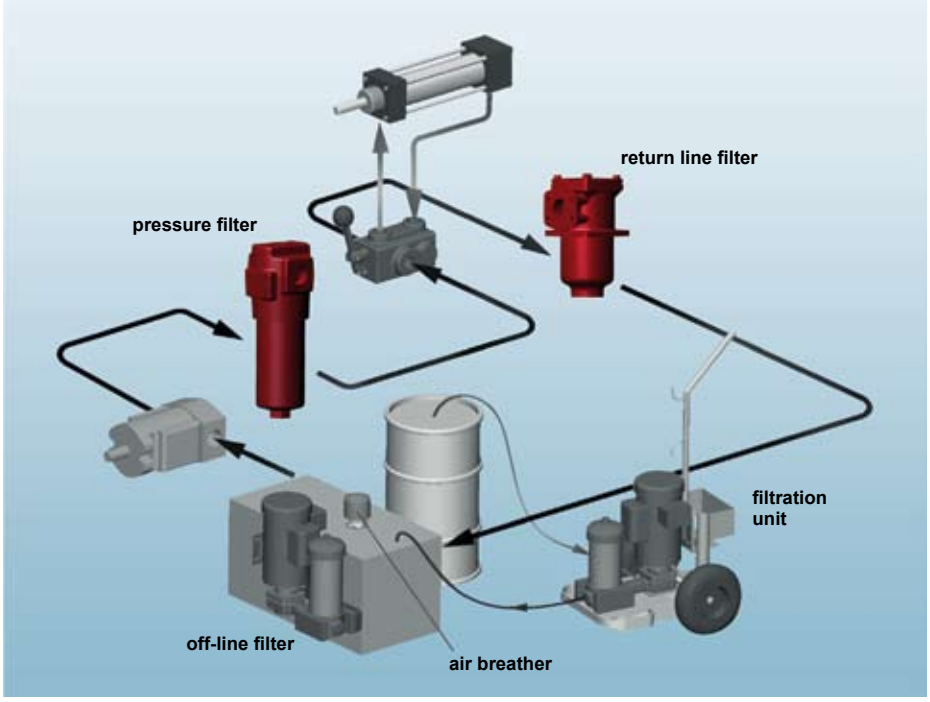

Suction filter

Suction filters serve to protect the pump from coarse fluid contamination which can cause a sudden pump failure.

Due to the risk of cavitation of the pump, relatively coarse filter materials with a filtration rating of > 25 µm are used.

For this reason, suction filters are **not** suitable for ensuring the component protection necessary for the economical operation of the system.

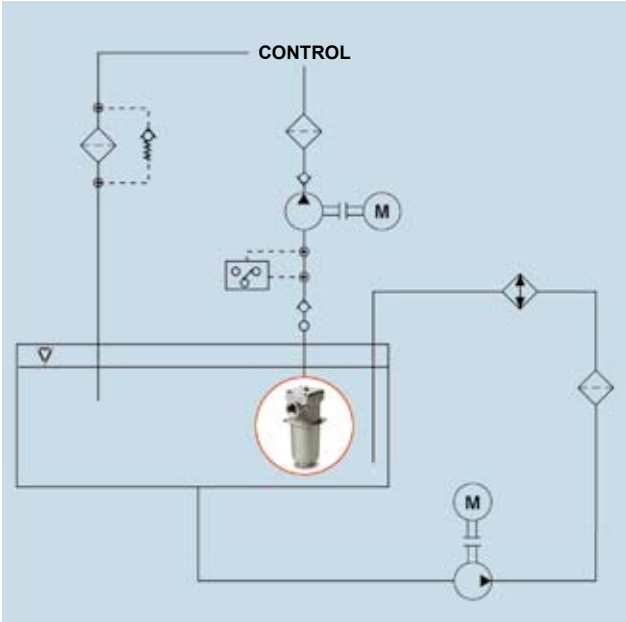

SF, SFM, suction filter element

Extract from product range

Suction filter	
Benefits	Remember
● Protects the pump against coarse contamination	● Fine filtration not possible ● Pump must be protected against cavitation (vacuum switch) ● Risk of cavitation, particularly at low temperatures (cold start) ● To guarantee protection from wear, another filter must be installed

Pressure filters

Pressure filters are fitted after the pump and they are sized for the system pressure and the flow rate of the pressure line in which they are installed. Pressure filters are particularly suitable for protecting sensitive components, located directly after the filter, such as servo valves. High pressure filters must withstand the maximum system pressure and the fatigue strength must also be guaranteed owing to the frequent pressure peaks in the system in many cases.

Pressure filters must always be fitted with a clogging indicator. Before particularly critical components, only inline filters without bypass valves should be used. Such filters must be fitted with a filter element which must itself be able to withstand higher differential pressures without sustaining any damage.

The filter housings must withstand the maximum dynamic system pressure.

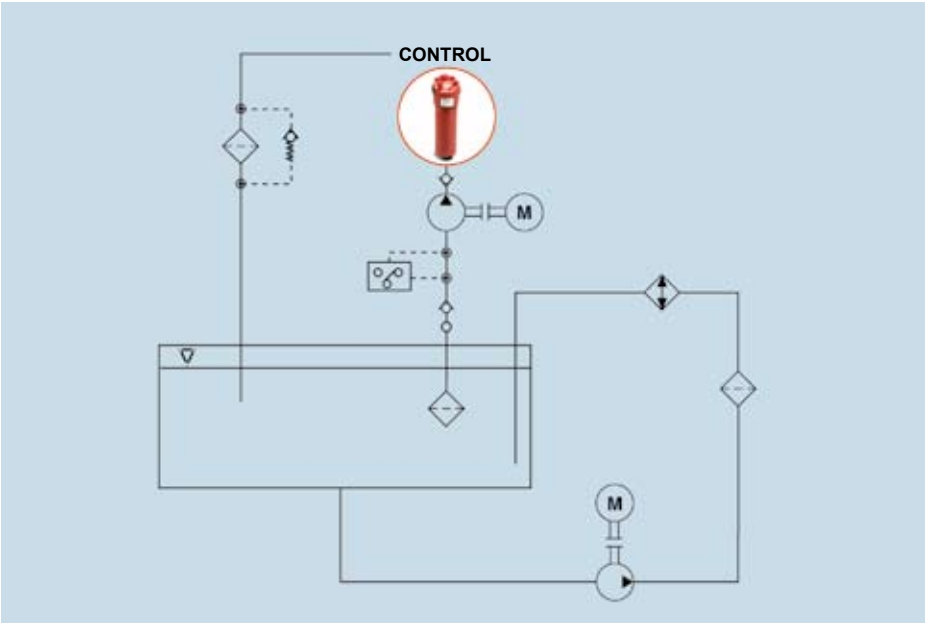

Inline filters

DF 420 bar

MFM 280 bar

LPF 50 bar

Extract from product range

Manifold-mounted filters

DFZ 315 bar

DF...M A 250 bar
DF...Q E 315 bar

DFP 315 bar

Extract from product range

Pressure filters	
Benefits	Remember
● Filtration directly before the components which need protection ● Required cleanliness level is guaranteed	● More expensive filter housing and element due to pressure load ● Complex element construction as a result of the necessary differential pressure resistance ● Pump is not protected ● In the case of single filters, the system must be switched off for element changes.

Return line filters

Return line filters are located in the return line as an inline filter or as a tank-mounted filter on the tank or in the tank. This means that the operating fluid coming from the system flows back into the tank completely filtered. Therefore all contamination particles are filtered out of the fluid before reaching the tank.

When selecting the correct filter size, the maximum possible flow rate must be taken in account. This corresponds to the area ratio of piston to piston minus the rod of hydraulic cylinders and can be greater than the flow rate generated by the pumps.

In order to avoid possible foaming of the fluid in the tank, make absolutely sure than the fluid outlet from the filter is always below the fluid level in all operating conditons. It may be necessary to fit a pipe or a flow rate diffuser in the filter outlet. It is important that the distance between the floor of the tank and the end of the pipe is no less than two to three times the pipe diameter.

Return line filters can be fitted with breather filters as additional equipment.

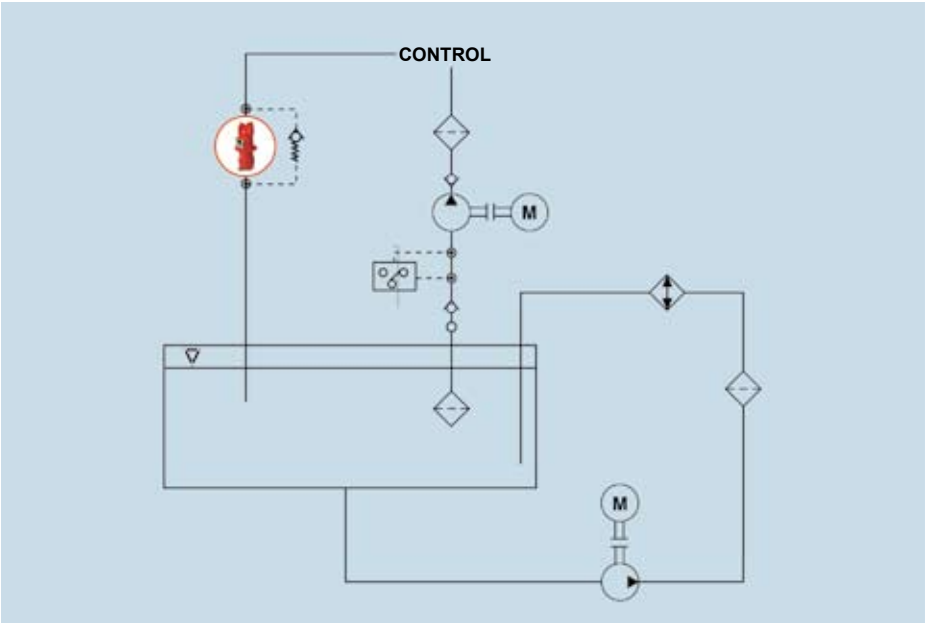

Return line filters

RF

NF

RFN

Extract from filter range

Return line filters	
Benefits	Remember
● All fluid flowing back to the tank is filtered ● No system contamination reaches the tank ● Filter housing and element are excellent value	● In the case of high-value components a pressure filter must be used in addition ● It is advisable to fit a bypass valve ● In the case of elements with low differential pressure resistance, it is possible for the element to burst as a result of multiple pulsations ● In the case of single filters, the system must be switched off to change the element ● Large filters are required for high flow rates (area conversion for differential cylinders)

Return line & suction boost filters

The return line & suction boost filter RKM was designed primarily for mobile machines with working hydraulics (e.g. extending and retracting cylinders) and drive hydraulics.

These filters have the advantage that filtered oil at a pressure of approx. 0.5 bar is supplied to the charge pump of the traction drive, which reduces the risk of cavitation in the charge pump and therefore provides excellent cold start characteristics.

In order to maintain the initial load of approx. 0.5 bar at the connection to the charge pump, a surplus of at least 10% between the return line volume and the suction volume is required under all operating conditions.

Through the use of a pressure relief valve, when the Δp reaches 2.5 bar, the oil flows directly into the tank (no bypass to the closed circuit).

If, in addition to the flow from the open circuit, the leakage oil from the hydrostatic drive also goes through the filter, then the permissible pressure of the leakage oil at the filter must not be exceeded (taking into account the pressure drop of the leakage oil lines, of the oil cooler and of the pressure relief valve) to protect the radial shaft seal rings.

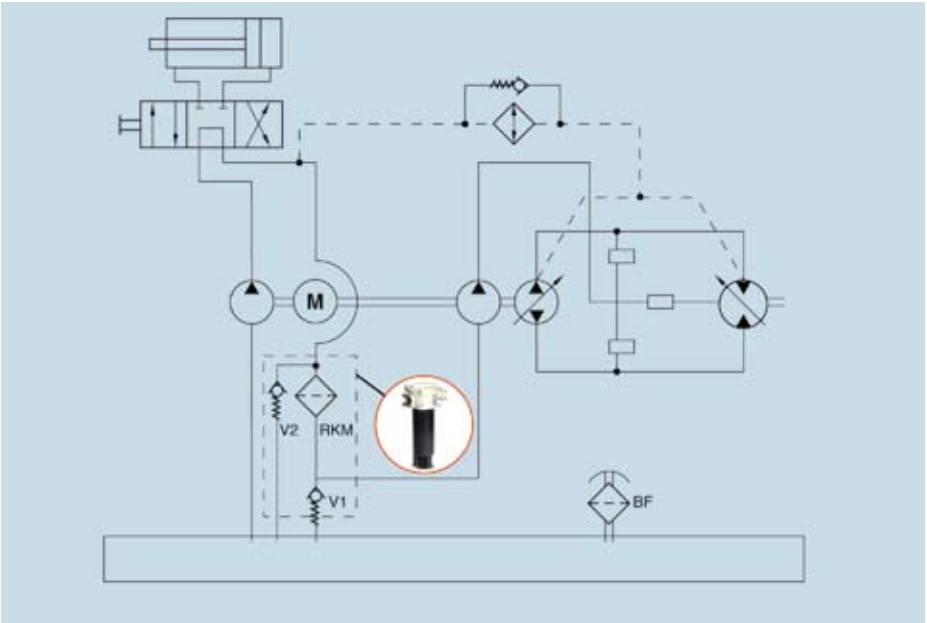

Return line & suction boost filter

RKM

Return line & suction boost filter	
Benefits	Remember
● Finely filtered oil reaches the user unit (increases the availability) ● Oil is precharged in the suction connection (0.5 bar) (prevents cavitation, less wear) ● Replaces several filters (lower fitting costs, only ONE spare element) ● Extremely low pressure drop (full filtration at low temperatures) ● Various options (thermal bypass valve, multi port)	● It makes sense if under operating conditions the return line volume is greater than the volume needed on the suction side

Offline filter

In hydraulic systems with heavy loads, additional offline filters are used increasingly to avoid the accumulation of fine particles.

In contrast to main filters, only part of the whole flow in the system is filtered by offline filters.

Excellent oil cleanliness levels can be achieved through continual filtration, regardless of the operating cycle of the machine. In addition, the main filters are relieved, meaning that element changing intervals can be extended.

Offline filter systems should be used in addition to main filters. In this case the main filter should be sized as a protective filter, i.e. filtering less finely and without a bypass valve.

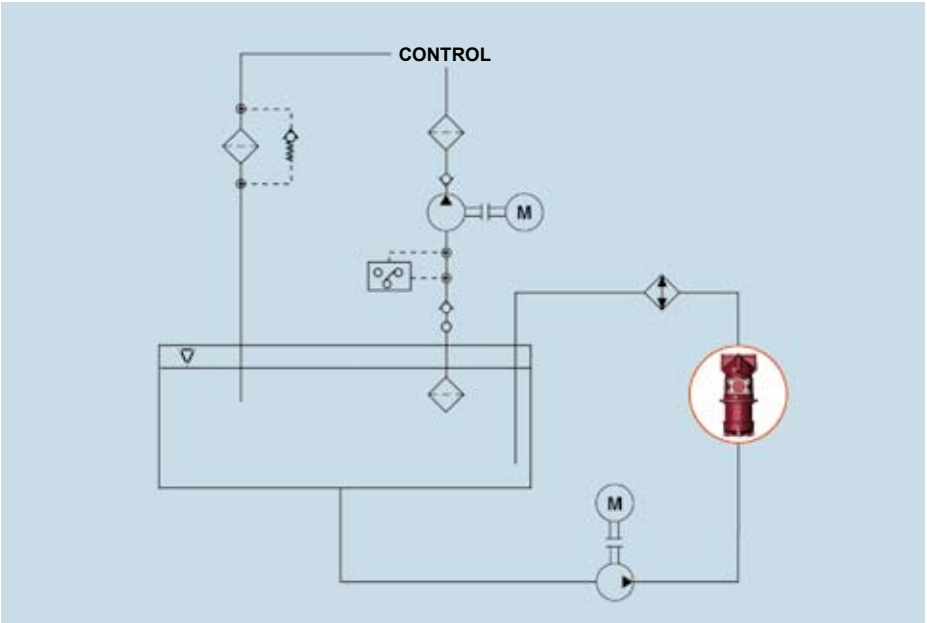

Offline filter

Extract from the product range

NF

Offline filter
Advantages
● Excellent cleanliness classes ● Filtration independent of the system ● High contamination retention capacity of filter elements as a result of pulsation-free, low and constant flow through the filter elements ● Element change possible without stopping the machine ● Cost savings as a result of lower material costs ● Less time spent on maintenance ● Fewer downtimes ● Cost-effective filter elements ● Possible to fill hydraulic system ● Can be easily retrofitted in systems with insufficient filtration ● Dewatering of the fluid is possible ● Service life of fluid in the system is extended

Generally speaking, offline filters should be installed:

- if a high rate of contamination is expected, e. g. on production test rigs, large-scale systems in dusty areas, cleaning systems
- when installing a separate cooling circuit
- when there are vigorous changes in system flow rate

Tank breather filters

Tank breather filters are one of the most important components in filter design.

As a result of changes in temperature and of using cylinders or accumulators, the oil level in the tanks of hydraulic and lubrication systems is subject to constant fluctuations.

The resulting pressure differential to the ambient is equalized by an exchange of air which means contamination can get into the tanks.

The entry of contamination can be prevented by breather filters. Ideally the breather filter should be of at least the same filtration rating as the system filter in the hydraulic circuit. By using breather filters with double check valves, the air exchange between the tank and the ambient can be significantly reduced, minimizing the amount of contamination and dust entering the tank and increasing the service life of the breather filter.

Where there are high temperature changes and high humidity, water also enters the tank. HYDAC BD filters prevent water from entering and therefore improve the fluid performance.

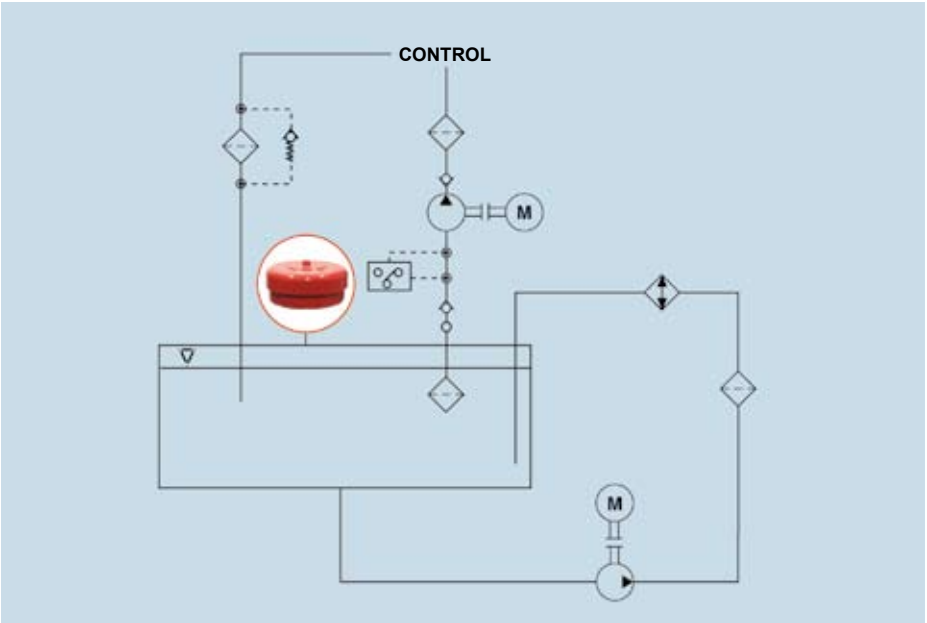

Tank breather filter

BF

ELF/L

BD/BDH/BDL

Extract from the product range

Breather filter	
Benefits	Remember
● Relieves the system filter by preventing contamination from entering the tank during tank breathing ● High air flow rate ● Cost-effective ● Environmentally friendly	● If the filter is incorrectly sized, damage may occur to the tank and the pump.

Summary

Filter location	Benefits	Remember	Filter designation
Breather filter	● Relieves the system filter by preventing contamination from entering the tank during tank breathing ● High air flow rate ● Cost-effective ● Environmentally friendly	● If the filter is incorrectly sized, damage may occur to the tank and the pump.	ELF, BF, BL, BD, ELFL, BT
In the suction line	● Pump protection	● Coarse filtration only ● Due to the pump suction conditions generously sized filters with a low differential pressure are required ● No protection of components further downstream from pump wear ● Unsuitable for many control pumps ● Minimal system protection ● It is imperative to safeguard the pump against vacuum pressure	SFE, SF, MF, MFD, LPF, LF, RFL, RFLN, SFM, SFF, SFR, SFFZ
In the pressure line	● Direct protection of the components ● Contributes to general cleanliness of the system ● Highly efficient fine filter elements can be used ● Filters pump drive systems	● Housing and element expensive since they must be sized for the max. system pressure ● Does not filter contamination from components further downstream ● High energy costs	DF, DFZ, DFN DFP, ILF, LFDK, MDF, MFM, LPF, LF MF, MFD, LFM, DFM, LFN, LFNF, LPF, LPFR, LFR, DFF, DFG, DFDK, DF..M A, DF..Q E, HFM
In the return line	● Filters the contamination which has entered the system as a result of component friction and worn wipers before they can reach the hydraulic tank ● Low pressure sizing of the filter housing enables costs to be reduced ● Can be fitted inline or in the tank	● No protection of the pump ● Return line flow rate fluctuations can reduce the filtration efficiency ● No direct component protection ● Large filters may be required, since the return flow is often larger than the pump flow	RF, RFM, RKM, RFL, RFLD, RFN, RFD, RFND, RFLN, RFLR, RFMR, RKMR
Offline e. g. cooling circuit	● Continual cleaning of the hydraulic fluid, also when the system is switched off ● Possible to carry out maintenance when system running ● Filtration performance is not affected by flow rate fluctuations and provides optimum service life and performance from the filter elements ● Possible to fill tank with filtered oil ● Particular cleanliness level can be achieved more accurately and can be maintained. ● Possible to integrate fluid cooling easily	● High investment costs ● Additional space required ● No direct component protection	NF, NFD, LF, MF

Filter selection

Filter efficiency is the most important but not the only factor involved when evaluating the filter design. A filter can be ineffective if it is installed in the wrong place and if it is given the wrong job.

When creating a filtration concept, some **fundamental rules** play an important role.

For example, the function of a hydraulic filter is always to reduce wear which means it should filter to a finer level than the critical tolerances. Filters should be used with the highest possible flow rate. Suitable seals on cylinders and on breather filters should prevent contamination from entering the system etc.

Therefore we can distinguish between **protective filters** and **working filters**.

Protective filter	Working filter
● Component protection	● Cleaning function
● No bypass valve	● Flow with least possible pulsations where filter installed
● Does not prevent long term wear	● Optional with bypass valve
● Filters more coarsely than working filter	● Differential pressure indicator is recommended
● High differential pressure resistant filter elements	● Use of low differential pressure resistant elements is possible

Restricting the flow velocity

Since specific flow velocities in the connection lines must not be exceeded, depending on the filter type, we recommend only special maximum flow rates.

Here we give guideline values which are based on our experience. Exceptions, depending on the application, are of course possible and reasonable.

	Maximum recommended flow rate in l/min				
Threaded connection	Suction filter 1.5 m/s	Return line filter 4.5 m/s	Pressure filter up to 100 bar 4.5 m/s	Pressure filter up to 280 bar 8 m/s	Pressure filter up to 420 bar 12 m/s
G ½	14	42	42	46	68
G ¾	23	69	69	74	111
G 1	37	112	112	119	178
G 1 ¼	59	178	178	182	274
G 1 ½	92	275	275	295	443

Determining the appropriate filter element

Depending on the ambient system conditions, the same filtration ratings will achieve different oil cleanliness levels.

The following oil cleanliness classes are typically achieved with HYDAC elements:

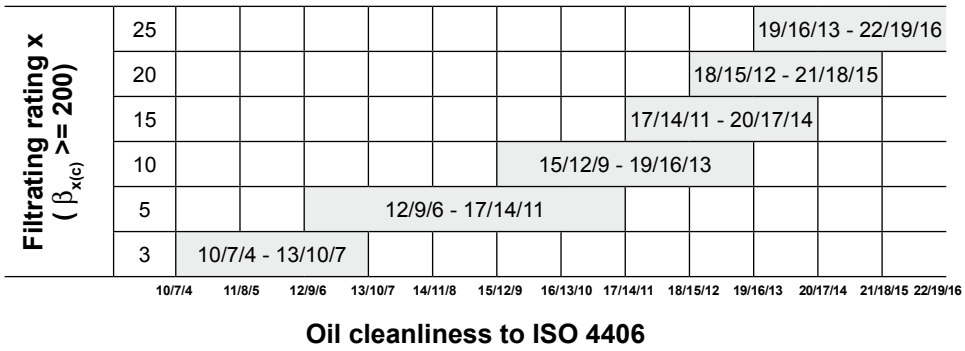

Selection of the appropriate filter material

The variety of applications of HYDAC filters has given rise to different element models, each specifically optimized for particular requirements. We are therefore in a position to provide you with the type of element most technically and economically appropriate for your special application. The following table outlines the most important filtration media. Our sales team is always available to help you select the filtration media which is most appropriate for your application.

	Element designation	Construction of filter mesh pack	Typical features
	Synthetic fine filtration materials		
	Betamicron® BN4HC (20 bar) BH4HC (210 bar)	Multi-layer, supported, pleated filter mesh pack with glass fibre	● High contamination retention ● High rate of particle separation over a wide differential pressure range ● High resistance to pressure and low rate fluctuations
	Mobilemicron MM	Multi-layer, supported, pleated filter mesh pack with synthetic fibre	● High rate of particle separation ● Low pressure drop ● Sufficient contamination retention ● First class filtration in the suction range possible
	Ecomicron ECON2	Multi-layer, supported, pleated filter mesh pack with synthetic fibre Support tube and end caps in electrically conductive synthetic material	● High rate of particle separation ● Low pressure drop ● High contamination retention ● Use of first class synthetic materials which can be easily disposed of ● Low weight ● Free of steel and iron
	Lubimicron G/HC	Multi-layer, supported, pleated filter mesh pack with synthetic fibre	● Definition of the filtration performance according to API specifications
	Dimicron® DM	Filter discs with at least two filtration layers in synthetic material	● High contamination retention (500 g/element) ● High rate of particle separation ● High cleaning effect in the single pass (fuelling stations)
	Paper		
	Paper P/HC	Simply supported, pleated, organic paper (usually impregnated with phenolic resin)	● Cheap element ● Low level of particle separation and contamination retention (multipass usually not possible) ● Low pressure drop ● Low pressure stability (bypass absolutely necessary)
	Stainless steel and wire mesh materials		
	Wire mesh or dutch weave W/HC or T/HC	Multi-layer or single-layer, supported, pleated square mesh in stainless steel or dutch weave	● Protective filter with low filtration performance and contamination retention
	Chemicron and metal fibre V	Multi-layer construction, pleated meshpack with sintered stainless steel fibre	● All the components in the element are made of stainless steel. ● For element type "Metal fibre V" these components are bonded with 2-component adhesive (max. temperature 100 °C). ● For element type "Chemicron" the element components are bonded without the use of other materials.

Filter sizing

Once the element material, the required filtration rating and the filter construction have been established, the size of the filter can be determined.

Here we can assume that the initial pressure drop of a filter does not exceed a specific value, or that it comes as close as possible to this value (see adjacent table).

Use as	Filter construction	Total initial differential pressure (with new filter element)
Working filter	Return line filter, Pressure filter with bypass valve	0.15 to 0.2 • $P_{indicator}$
	Offline filter, Inline filter, Separate units	0.15 to 0.2 bar
Protective filter	Pressure filter without bypass valve	0.3 • $P_{indicator}$
	Suction filter	0.04 bar

The total pressure drop of a filter (at a specific flow rate Q) consists of the housing Δp and the element Δp and is calculated as follows:

$$\Delta p_{total} = \Delta p_{housing} + \Delta p_{element}$$

$$\Delta p_{housing} = \text{please refer to housing curve (see brochure)}$$

$$\Delta p_{element} = Q \cdot \frac{\text{element gradient coefficient}}{1000} \cdot \frac{\text{operating viscosity}}{30}$$

Example

Sizing a return line filter, tank-mounted, type RFM 150, element material Betamicron®4,
10 µm filtration rating,
Flow rate in the return line: 60 l/min,
Operating fluid: ISO VG 46,
Operating temperature: 40 °C.

Note:
At 40 °C this oil has an operating viscosity of approx. 46 mm²/s (always take manufacturer's data into account).

Maximum initial differential pressure: 1 bar (=0.2 • $P_{indicator}$ = 0.2 • 2 bar = 0.4 bar)

$\Delta p_{housing}$:
(please refer to "RFM" brochure)

RFM 90, 150

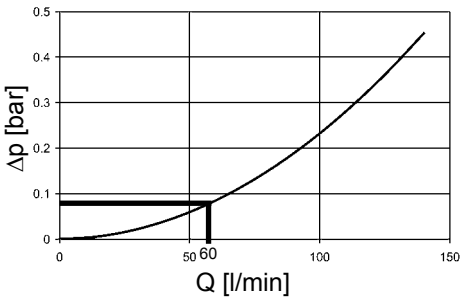

$\Delta p_{element}$:
(for gradient coefficients for element 0150 R 010 BN4HC please refer to "Filter Elements" brochure or "RFM" brochure)

$$60\ \text{l/min} \cdot \frac{4{,}0}{1000} \cdot \frac{46\ \text{mm}^2/\text{s}}{30} = 0.368$$

$$\Delta p_{total} = \Delta p_{housing} + \Delta p_{element}$$
$$0.09 + 0.368 = 0.458\ \text{bar}$$

How to proceed in practice?

If you calculate on the generous side, i.e. choosing the larger filter, this will provide a longer service life, and will probably cost more. But if the sizing is only just adequate, i.e. you select the smallest possible filter, you risk a shorter service life and reduced component protection despite lower purchase costs.

The aim, of course, is to find the most economical filter whilst taking into consideration the total system life cycle (reduction of the Life Cycle Cost).

The size of the filter can be determined with the help of

- Housing and element pressure drop curves in the brochures (= manual filter sizing)
- Filter sizing program **Size-IT** (= computer-aided filter sizing)
- Concept creation tool **Optimize-IT** (= computer-aided system optimisation)

Computer-aided filter sizing using Filter Sizing Program "Size-IT".

Size-IT enables computer-aided filter sizing, specific to the particular system and application profile.

Size-IT is a component of our electronic product catalogue on CD-ROM, **Filter-IT**.

We will of course be pleased to send you a copy. Alternatively the program is available on our website (www.hydac.com).

By using **Size-IT**, all the calculations which in the previous example had to be carried out painstakingly step by step, are done fully automatically.

Possible errors when reading out graph values are avoided; the time saving is considerable.

Example of filter calculation using sizing software "Size-IT":

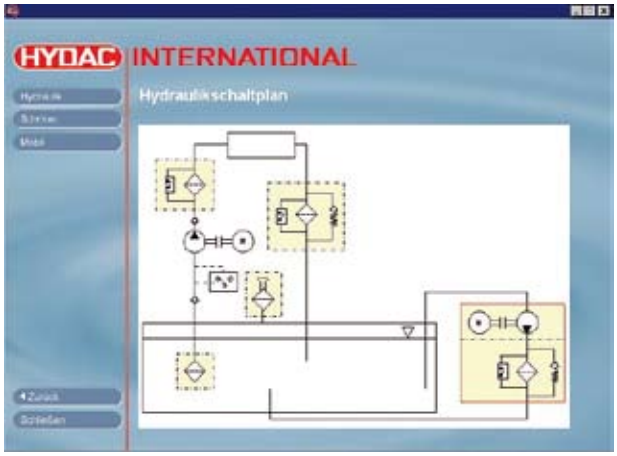

Selecting a filter type in the hydraulic circuit diagram

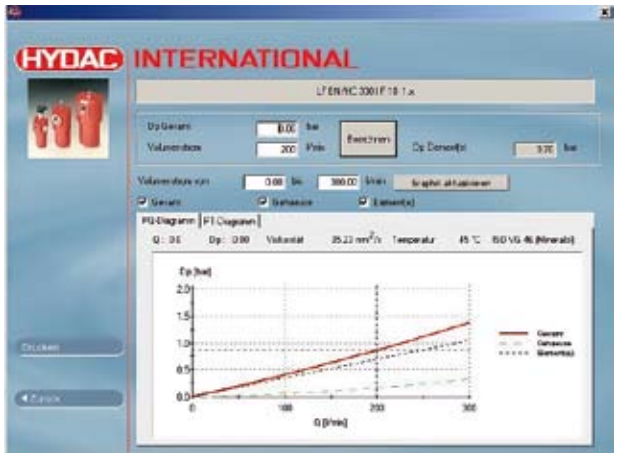

Display of element, housing and total curve for the selected filter type

Filter calculation according to the expected contamination rate using the concept creation tool "Optimize-IT"

This electronic tool, called **Optimize-IT**, is also a component of our electronic product catalogue, but is only available to our filter specialists.

Cleanliness classes and achievable service lives for different filter designs can be identified and compared using this tool.

Based on the expected contamination, the optimum filter combination and filter size combination can be determined, right down to a specific calculation of the element costs per year.

Example of concept optimization using the electronic tool "Optimize-IT":

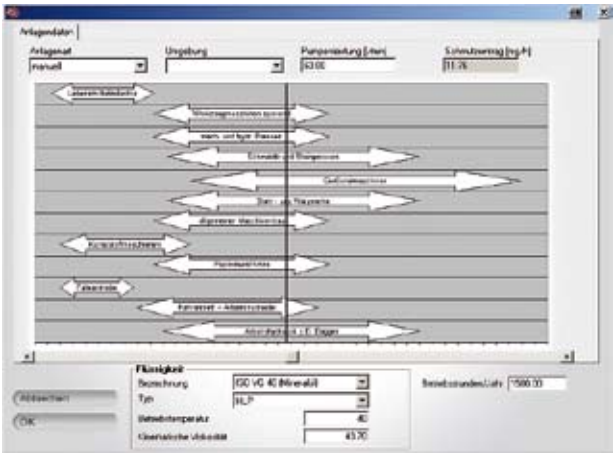

Determining the expected contamination for a particular system

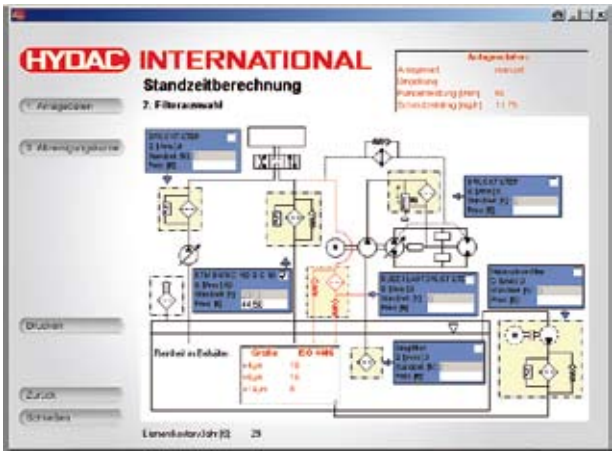

Calculation of the service lives and element costs/year

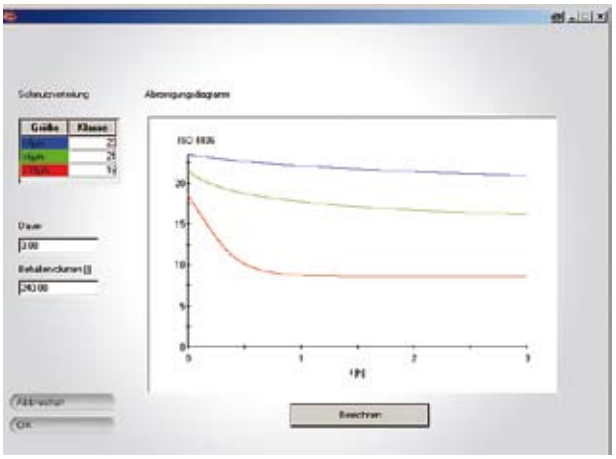

Graph showing cleaning