Tolomatic
EXCELLENCE IN MOTION®

MXB BELT DRIVEN ACTUATORS

ENDURANCE TECHNOLOGY℠

U UNGUIDED
P PROFILED RAIL

MAXIMUM DURABILITY

MXB Belt Driven Actuator

DESIGNED TO OUTLAST EVERY BELT DRIVEN ACTUATOR ON THE MARKET

The MXB belt driven electric actuator is exactly what you would expect from the industry's number one rodless supplier. Designed with our exclusive ENDURANCE TECHNOLOGY℠ features, the MXB delivers superior performance to meet the most demanding applications. Nobody knows rodless like Tolomatic, and the MXB proves it.

- MXB-U & MXB-P: Low profile to fit your application
- MXB-P: High precision bearings feature smooth, low breakaway motion
- MXB-P: Durable profiled rail design uses THK® Caged Ball® technology to reduce friction and extend actuator life.
- MXB-P: High load and bending moment capacities

Choose from our broad line of MX products:

ELECTRIC				PNEUMATIC		
MXB		MXE		MXP		
Belt Driven		Screw Driven		Rodless Cylinder		
P Profiled Rail	U Unguided	P Profiled Rail	S Solid Bearing	P Profiled Rail	S Solid Bearing	N Internal Bearing
MXB16P	MXB16U	MXE16P	MXE16S	MXP16P	MXP16S	MXP16N
MXB25P	MXB25U	MXE25P	MXE25S	MXP25P	MXP25S	MXP25N
MXB32P	MXB32U	MXE32P	MXE32S	MXP32P	MXP32S	MXP32N
MXB40P	MXB40U	MXE40P	MXE40S	MXP40P	MXP40S	MXP40N
MXB50P	MXB50U	MXE50P	MXE50S	MXP50P	MXP50S	MXP50N
MXB63P	MXB63U	MXE63P	MXE63S	MXP63P	MXP63S	MXP63N

A Comparison of Tolomatic Belt Drive Actuators

All Tolomatic belt drive actuators feature:

- High linear velocity
- High acceleration rate
- Long stroke lengths
- Excellent repeatability
- High duty cycles
- Low profile

Unique features include:

MXB-U *Electric Belt Drive*	***MXB-P*** *Electric Belt Drive*	***B3W*** *Electric Belt Drive*	***TKB*** *Electric Belt Drive*
• Requires external guidance and support	• High load and bending moment capacities		• Superior rigidity, high moment loads
	• High precision bearings feature smooth, low breakaway motion		• Straightness and flatness within 0.0002 inches per inch of stroke
	• Durable profiled rail design uses THK® Caged Ball® technology to reduce friction and extend actuator life		• Wide stable platform for XY applications
			• Lowest carrier deflection of any Tolomatic actuator
www.tolomatic.com *for complete information, search by literature number:*			
#8500-4000	*#8500-4000*	*#3600-4148*	*#3600-4609*

5 DAYS BUILT-TO-ORDER

World class performance, five days built-to-order and legendary customer service . . .

what you expect from the rodless leader . . . Tolomatic EXCELLENCE IN MOTION®

FREE downloads at www.tolomatic.com:

SIZING SOFTWARE

- ***Sizing & Selection Software***
- ***3D Solid Models***

3D CAD 2D

CONTENTS

MXB Belt Drive Actuator.. 2
- MX Products.....2
- Belt Drive Comparison.....3
- Belt Drive Advantages 4
- Belt Construction 4
- Applications 5

MXB-U Features..... 6
MXB-P Features..... 8
Specifications..... 10
Acceleration 11
Mounting Plate Requirements..... 11
Moment & Load Capacity..... 12
Load Deflection 13
MXB-U Actuator Dimensions..... 14
MXB-U Option Dimensions..... 14
MXB-P Actuator Dimensions..... 15
MXB-P Option Dimensions..... 16
Direct Drive Motor Mounting 17
Reduction Drive Motor Mounting..... 17
Switches 18
Application Data Worksheet 20
Selection Guidelines 21
Service Parts Ordering... 22
Ordering..... 23
Other Tolomatic Products..... 24

MXB Belt Driven Actuator

ADVANTAGES OF BELT SOLUTIONS

The use of synchronous belts, often referred to as timing belts, have become a standard in the automated motion industry as an alternate to screw drive mechanisms for producing linear motion. MXB-U and MXB-P belt driven actuators are an excellent solution for applications that require:

- High linear velocities
- High acceleration rates
- Long stroke lengths
- Excellent repeatability
- High duty cycles

Tolomatic belt driven actuators can achieve linear acceleration up to 1200 in/sec^2,
MXB-U velocity of up to 200 in/sec (5 m/sec) and
MXB-P velocity of up to 150 in/sec (3.8 m/sec).

BELT CONSTRUCTION

Tolomatic's standard belt is a polyurethane material reinforced with steel tension members to produce high carrier thrusts without belt stretch.

Tolomatic uses an HTD synchronous belt that features a curvilinear tooth profile. The HTD tooth profile distributes tooth load more evenly and provides greater tooth shear strength, allowing for higher thrust loading.

The deep teeth of the HTD profile are cogging-resistant, preventing potentially damaging positioning errors.

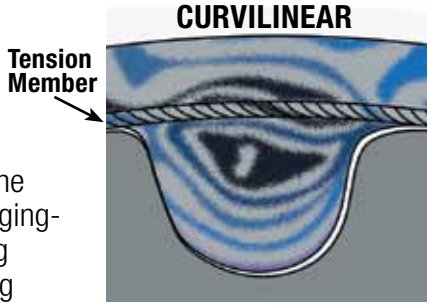

Tolomatic's belt tooth profile distributes thrust force evenly

BELT DRIVEN APPLICATIONS

Tolomatic MXB-U and MXB-P belt driven actuators are:

- Easy to size and order
- Quick to install and maintain
- Simple to integrate and control

Both MXB-U and MXB-P are available in multiple frame sizes. The MXB-P belt driven actuator integrates the advantages of a linear belt solution with a load support and guidance system. This combination allows you to install a pre-assembled and compact solution, often without the need of external guide rails or load support systems. MXB-P offers options such as dual carriers for twice the load and moment capacity.

U APPLICATION: Workcenter Positioning

+Positioning

+Assembly

+Milling

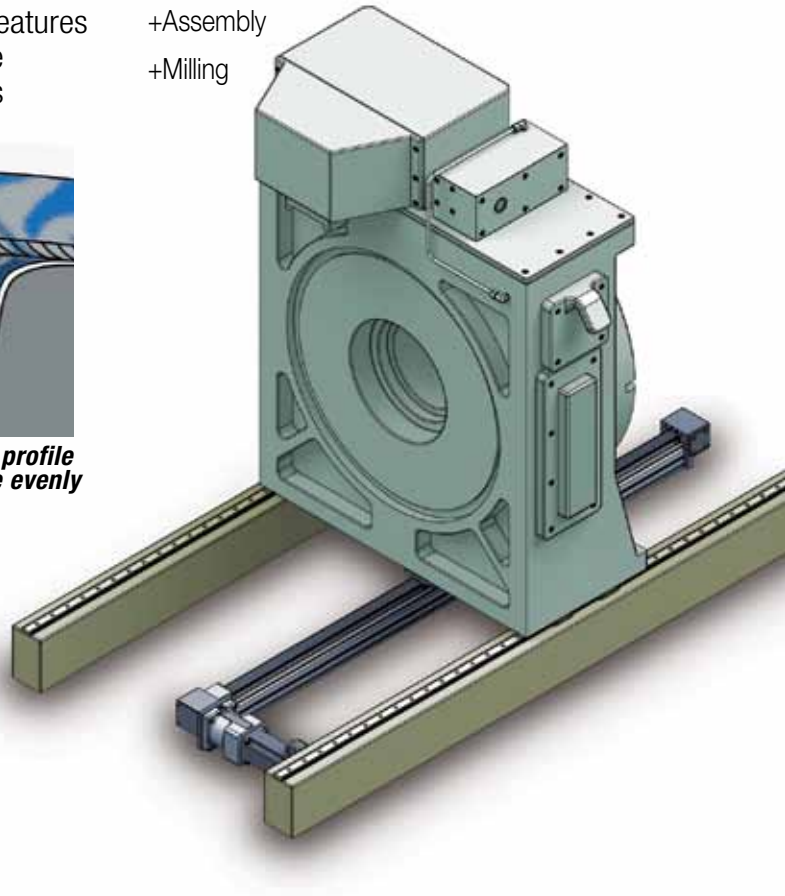

P APPLICATION: High Speed Flying Cut Off

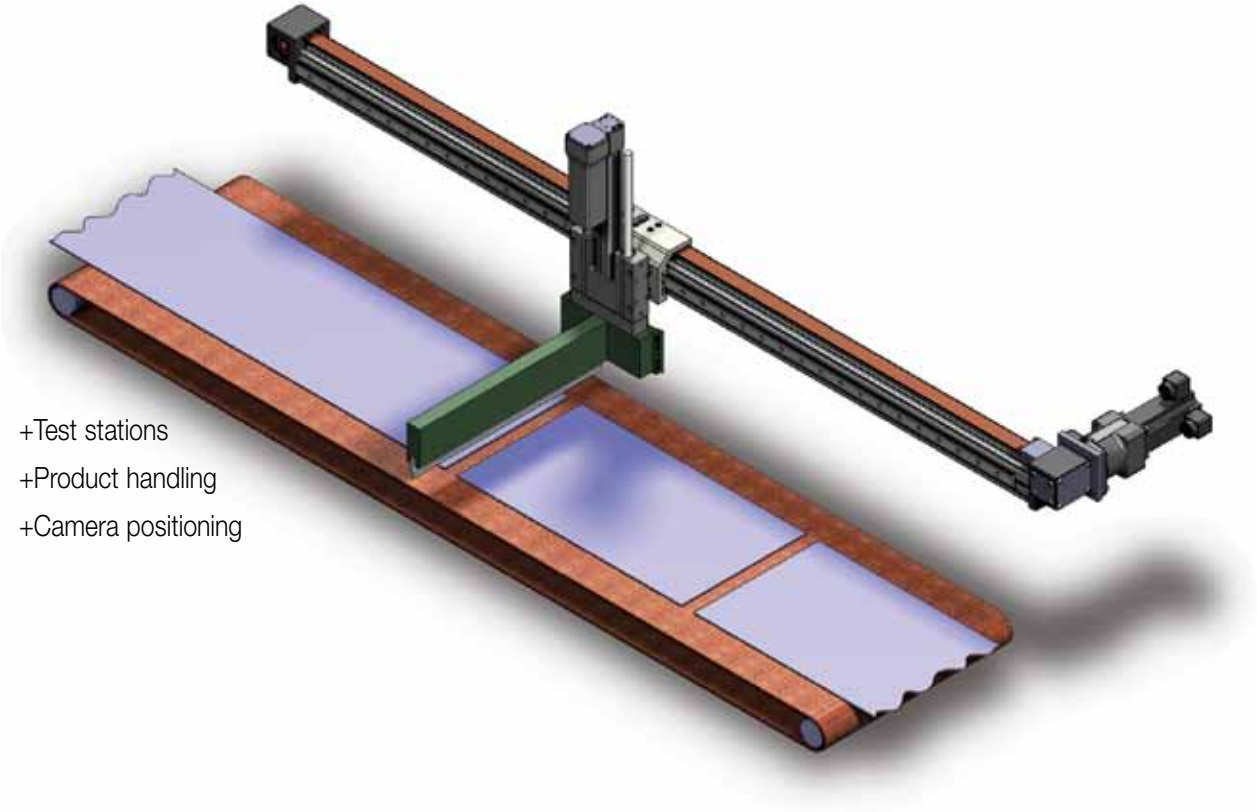

+Test stations
+Product handling
+Camera positioning

P APPLICATION: X-Y Multi-Axis

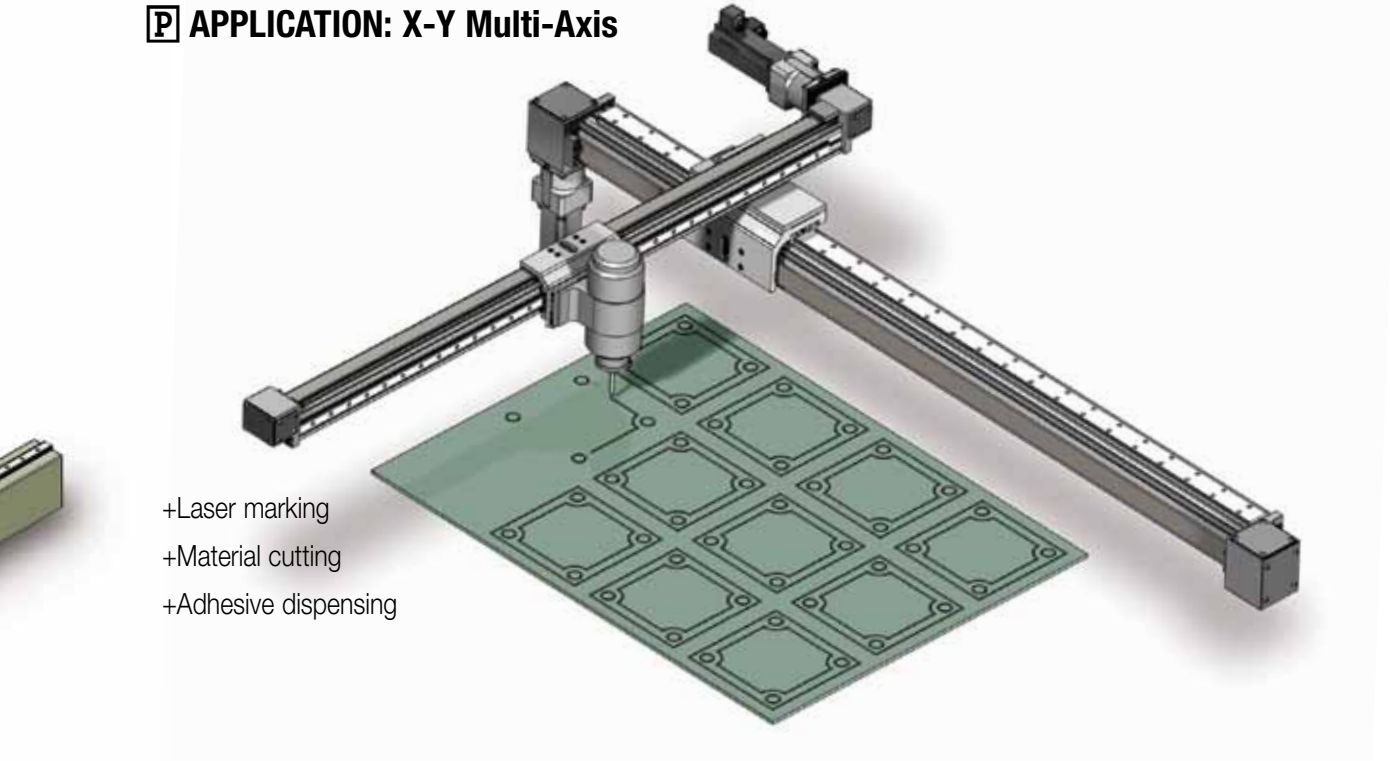

+Laser marking
+Material cutting
+Adhesive dispensing

MXB-U BELT DRIVE (UNGUIDED)

ENDURANCE TECHNOLOGY℠

Endurance Technology℠ features are designed for maximum durability to provide extended service life.

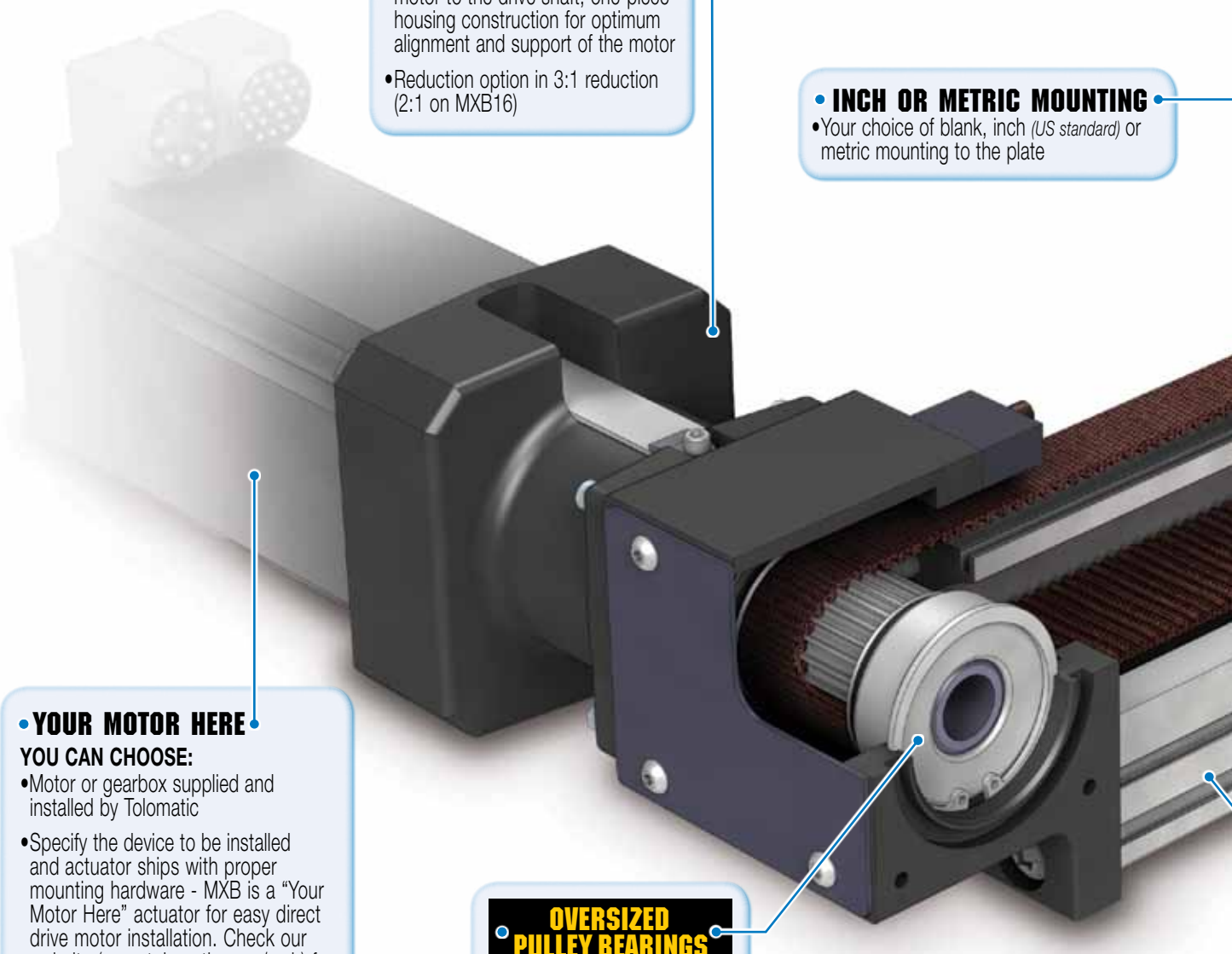

MOTOR ORIENTATION

YOU CAN CHOOSE:

- Direct drive option directly couples motor to the drive shaft; one-piece housing construction for optimum alignment and support of the motor
- Reduction option in 3:1 reduction (2:1 on MXB16)

INCH OR METRIC MOUNTING

- Your choice of blank, inch *(US standard)* or metric mounting to the plate

YOUR MOTOR HERE

YOU CAN CHOOSE:

- Motor or gearbox supplied and installed by Tolomatic
- Specify the device to be installed and actuator ships with proper mounting hardware - MXB is a "Your Motor Here" actuator for easy direct drive motor installation. Check our website (www.tolomatic.com/ymh) for complete information
- Specify and ship your device to Tolomatic for factory installation

OVERSIZED PULLEY BEARINGS

- Drive shaft assembly incorporates oversized sealed ball bearings for long life and high speeds

5 DAYS BUILT-TO-ORDER

...MAXIMUM DURABILITY

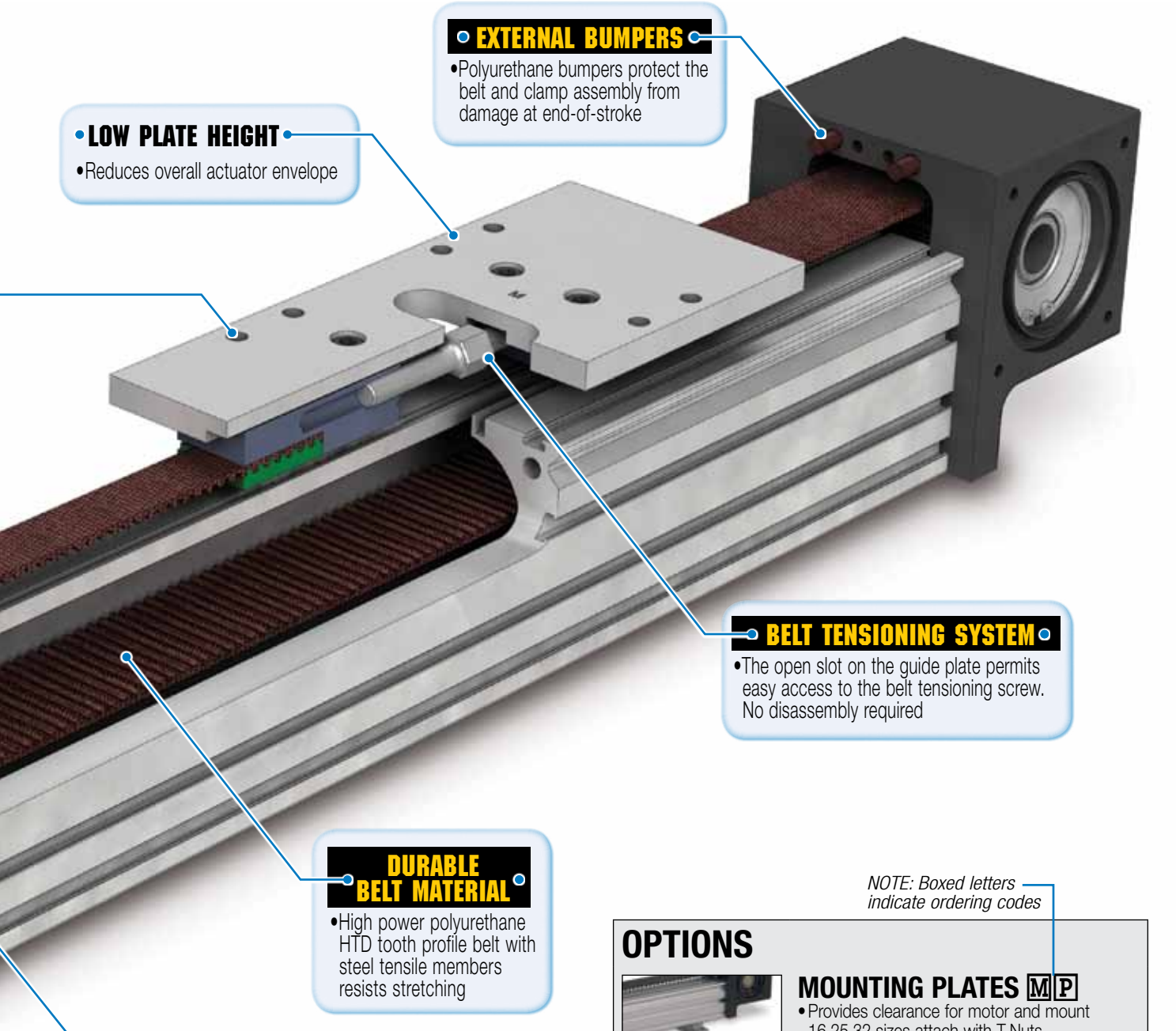

EXTERNAL BUMPERS
- Polyurethane bumpers protect the belt and clamp assembly from damage at end-of-stroke

LOW PLATE HEIGHT
- Reduces overall actuator envelope

BELT TENSIONING SYSTEM
- The open slot on the guide plate permits easy access to the belt tensioning screw. No disassembly required

DURABLE BELT MATERIAL
- High power polyurethane HTD tooth profile belt with steel tensile members resists stretching

LIGHTWEIGHT ALUMINUM DESIGN
- Clear anodized extrusion design is optimized for rigidity and strength

NOTE: Boxed letters indicate ordering codes

OPTIONS

MOUNTING PLATES [M][P]
- Provides clearance for motor and mount
  16,25,32 sizes attach with T-Nuts
  40,50,63 sizes attach with Tube Clamps

HEAD COVER PLATE [H][C][P]
- Provides protection for pulley and bearing

TUBE CLAMPS [T][C]
- Used for intermediate support
- Flush with bottom of actuator to retain low profile
- Drop-in, adjustable mounting locations (Not available on the MXB16U))

MXB-P BELT DRIVE (PROFILED RAIL)

ENDURANCE TECHNOLOGY℠

Endurance Technology℠ features are designed for maximum durability to provide extended service life.

CAGED BALL® BEARINGS

- THK® Caged Ball® bearings are used to reduce friction and extend actuator life
- Caged Ball® technology creates a grease pocket between ball elements, reducing friction, noise and maintenance
- Large permissible moment loads
- High speed operation, low heat generation
- High precision, smooth, low friction motion

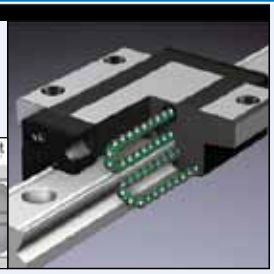

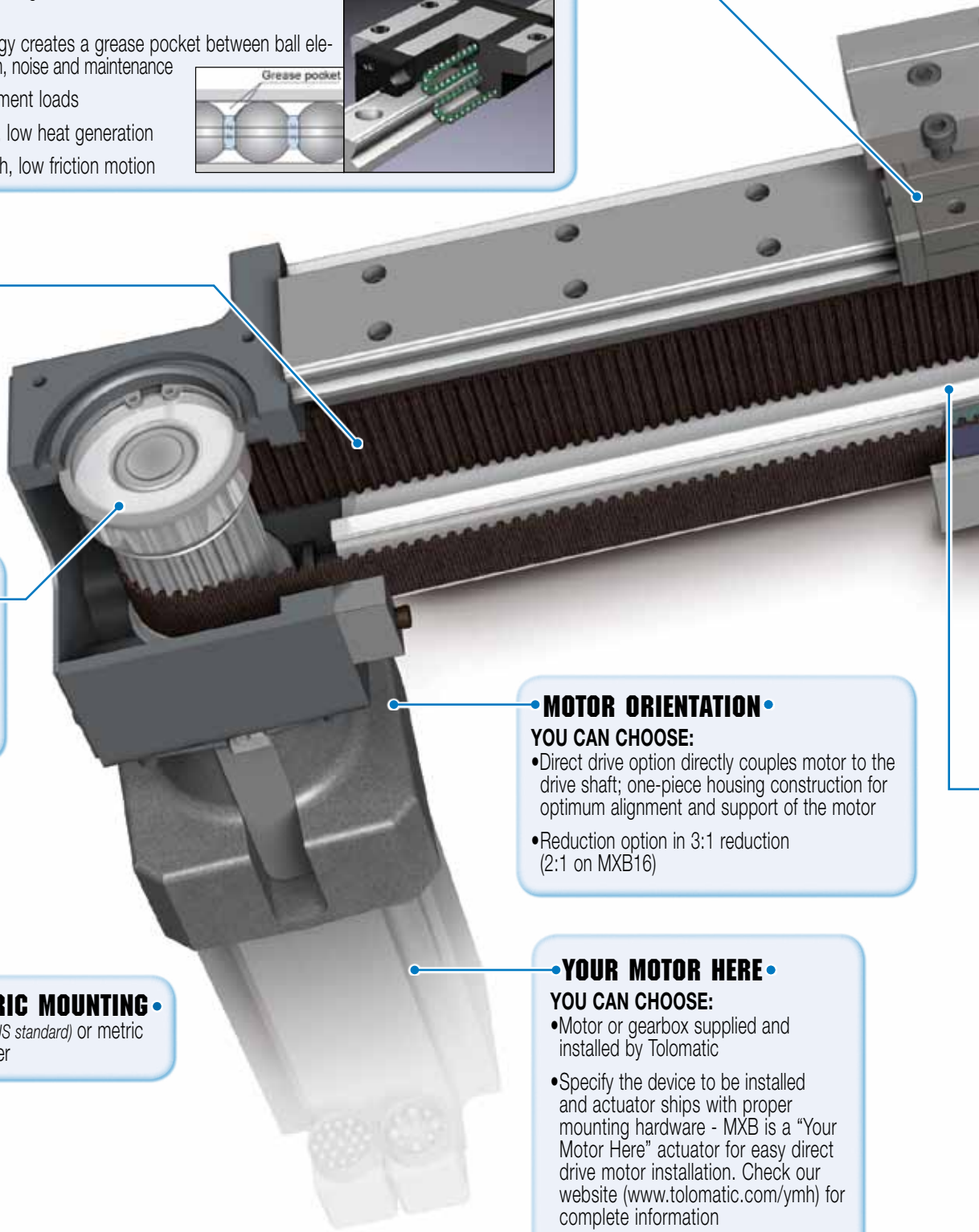

DURABLE BELT MATERIAL

- High power polyurethane HTD tooth profile belt with steel tensile members resists stretching

OVERSIZED PULLEY BEARINGS

- Drive shaft assembly incorporates oversized sealed ball bearings for long life and high speeds

MOTOR ORIENTATION

YOU CAN CHOOSE:

- Direct drive option directly couples motor to the drive shaft; one-piece housing construction for optimum alignment and support of the motor
- Reduction option in 3:1 reduction (2:1 on MXB16)

YOUR MOTOR HERE

YOU CAN CHOOSE:

- Motor or gearbox supplied and installed by Tolomatic
- Specify the device to be installed and actuator ships with proper mounting hardware - MXB is a "Your Motor Here" actuator for easy direct drive motor installation. Check our website (www.tolomatic.com/ymh) for complete information
- Specify and ship your device to Tolomatic for factory installation

INCH OR METRIC MOUNTING

- Your choice of inch *(US standard)* or metric mounting to the carrier

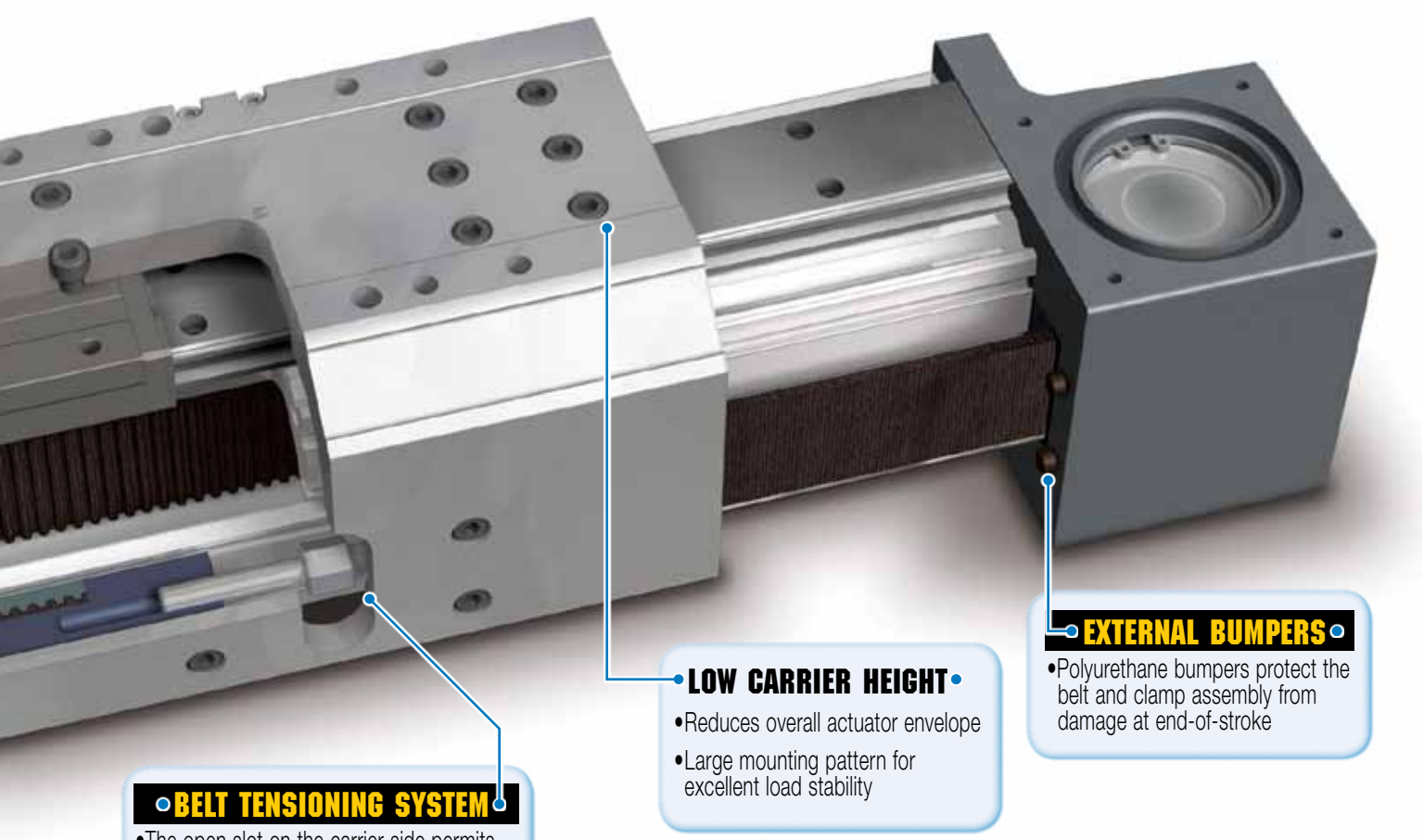

LOW CARRIER HEIGHT

- Reduces overall actuator envelope
- Large mounting pattern for excellent load stability

EXTERNAL BUMPERS

- Polyurethane bumpers protect the belt and clamp assembly from damage at end-of-stroke

BELT TENSIONING SYSTEM

- The open slot on the carrier side permits easy access to the belt tensioning screw. No disassembly required and no need to remove the load from the carrier

LIGHTWEIGHT ALUMINUM DESIGN

- Clear anodized extrusion design is optimized for rigidity and strength

NOTE: Boxed letters indicate ordering codes

OPTIONS

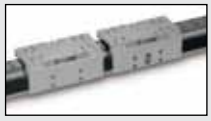

AUXILIARY CARRIER DC

- 2X higher Fz & Fy (load) capacity
- High bending moment capacity

MOUNTING PLATES MP

- Provides clearance for motor and mount
  16,25,32 sizes attach with T-Nuts
  40,50,63 sizes attach with Tube Clamps

TUBE CLAMPS TC

- Used for intermediate support
- Flush with bottom of actuator to retain low profile
- Drop-in adjustable mounting locations

(Not available on the 16, 25 or 32 MXB-P sizes)

HEAD COVER PLATE HCP

- Provides protection for pulley and bearing

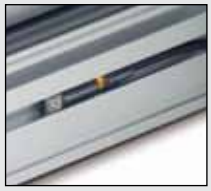

SWITCHES

- Wide variety of sensing choices: Reed, Solid State PNP or NPN, available normally open or normally closed
- Flush mount, drop-in installation
- Bright LEDs, power & signal indication
- CE rated, RoHS compliant

5 DAYS BUILT-TO-ORDER

MXB Belt Driven Actuator

SIZING SOFTWARE AVAILABLE AT WWW.TOLOMATIC.COM

ACTUATOR SPECIFICATIONS AND BREAKAWAY TORQUE

U & P MXB SIZE	BELT WIDTH		BELT DEAD LENGTH		PULLEY PITCH DIAMETER		STROKE PER REVOLUTION		*MAXIMUM STROKE		BREAKAWAY TORQUE: SINGLE CARRIER		BREAKAWAY TORQUE: AUXILIARY CARRIER OPT. (MXB-P ONLY)	
	in	mm	in	mm	in	mm	in	mm	in	mm	lb-in	N-m	lb-in	N-m
16	0.39	10	14.29	363.0	0.753	19.1	2.366	60.1	200	5080	4.0	0.452	6.0	0.678
25	0.71	18	18.72	475.5	1.003	25.5	3.151	80.0	200	5080	5.0	0.565	7.0	0.791
32	0.98	25	21.89	556.0	1.253	31.8	3.936	100.0	200	5080	8.0	0.904	10.0	1.130
40	1.18	30	24.95	633.7	1.504	38.2	4.725	120.0	200	5080	10.0	1.130	12.0	1.356
50	1.57	40	27.25	692.2	1.754	44.6	5.510	140.0	160	4064	15.0	1.695	18.0	2.034
63	1.97	50	36.11	917.2	2.130	54.1	6.692	170.0	100	2540	20.0	2.260	25.0	2.825

*Longer lengths may be possible with use of tube couplers - Contact Tolomatic

U MXB-U SIZE	WEIGHT: PLATE ASSEMBLY		WEIGHT: BELT TENSIONER ASSEMBLY		WEIGHT: BASE ACTUATOR		WEIGHT: PER UNIT OF STROKE		INERTIA: DRIVE/IDLE PULLEY ASSEMBLIES		INERTIA: PLATE ASSEMBLY (INCLUDING BELT TENSIONER ASSEMBLY)		INERTIA: PER UNIT OF STROKE	
	lb	kg	lb	kg	lb	kg	lb/in	kg/cm	lb-in²	kg-cm²	lb-in²	kg-cm²	lb-in²	kg-cm²
16	0.11	0.05	0.10	0.05	1.59	0.72	0.084	0.0150	0.0085	0.0250	0.0335	0.0980	0.0005	0.0006
25	0.27	0.12	0.15	0.07	2.59	1.17	0.138	0.0246	0.0259	0.0759	0.1201	0.3515	0.0017	0.0020
32	0.48	0.22	0.30	0.13	4.17	1.89	0.237	0.0423	0.1416	0.4143	0.3451	1.0099	0.0037	0.0043
40	0.90	0.41	0.46	0.21	7.83	3.55	0.352	0.0629	0.3719	1.0884	0.8487	2.4836	0.0065	0.0075
50	1.03	0.47	0.72	0.33	9.93	4.50	0.472	0.0843	0.7243	2.1196	1.5103	4.4198	0.0117	0.0135
63	2.54	1.15	0.83	0.38	16.44	7.46	0.833	0.1488	1.9512	5.7101	4.2168	12.3401	0.0216	0.0249

P MXB-P SIZE	WEIGHT: CARRIER ASSEMBLY		WEIGHT: BELT TENSIONER ASSEMBLY		WEIGHT: BASE ACTUATOR		WEIGHT: PER UNIT OF STROKE		INERTIA: DRIVE/IDLE PULLEY ASSEMBLIES		INERTIA: CARRIER ASSEMBLY (INCLUDING BELT TENSIONER ASSEMBLY): SINGLE CARRIER		INERTIA: CARRIER ASSEMBLY (INCLUDING BELT TENSIONER ASSEMBLY): AUXILIARY CARRIER OPT.		INERTIA: PER UNIT OF STROKE	
	lb	kg	lb	kg	lb	kg	lb/in	kg/cm	lb-in²	kg-cm²	lb-in²	kg-cm²	lb-in²	kg-cm²	lb-in²	kg-cm²
16	0.39	0.18	0.10	0.05	2.38	1.08	0.102	0.0183	0.0085	0.0250	0.4856	1.4211	0.8716	2.5506	0.0005	0.0006
25	0.84	0.38	0.15	0.07	4.36	1.98	0.195	0.0348	0.0259	0.0759	0.9914	2.9013	1.8353	5.3708	0.0017	0.0020
32	1.64	0.74	0.30	0.13	7.83	3.55	0.318	0.0569	0.1416	0.4143	1.9356	5.6642	3.5757	10.4641	0.0037	0.0043
40	2.51	1.14	0.46	0.21	14.07	6.38	0.537	0.0959	0.3719	1.0884	2.9693	8.6893	5.4832	16.0460	0.0065	0.0075
50	5.03	2.28	0.72	0.33	20.84	9.45	0.749	0.1337	0.7243	2.1196	5.7498	16.8263	10.7770	31.5378	0.0117	0.0135
63	9.36	4.25	0.83	0.38	37.24	16.89	1.110	0.1981	1.9512	5.7101	10.1930	29.8288	19.5537	57.2221	0.0216	0.0249

MAXIMUM VELOCITY U	200 in/sec	*5080 mm/sec*
MAXIMUM VELOCITY P	150 in/sec	*3810 mm/sec*
MAXIMUM ACCELERATION	1200 in/sec²	*30.48 m/sec²*
REPEATABILITY	± 0.002 in	*± 0.051 mm*
TEMPERATURE RANGE	10 to 130 °F	*-12 to 54 °C*

⚠ Heat generated by the motor and drive should be taken into consideration as well as linear velocity and work cycle time. For applications that require operation outside of the recommended temperature range, contact the factory.

STRAIGHTNESS, FLATNESS 0.00067 L in *0.01702 L mm*

Actuator mounted on a flat surface and fully restrained (see Mounting Plate Requirements, page 11) L = Maximum distance between supports

⚠ The listed values relating to straightness/flatness are intended for reference purposes only, and not as an engineering standard of absolute tolerance for a given actuator. Appropriate installation is the single most important factor in reducing variation, so good engineering practices such as measurement, mapping, etc. must be employed in applications with stringent straightness/flatness requirements.

SIZING SOFTWARE AVAILABLE AT WWW.TOLOMATIC.COM

MAXIMUM ACCELERATION AS A FUNCTION OF LOAD WEIGHT (U & P)

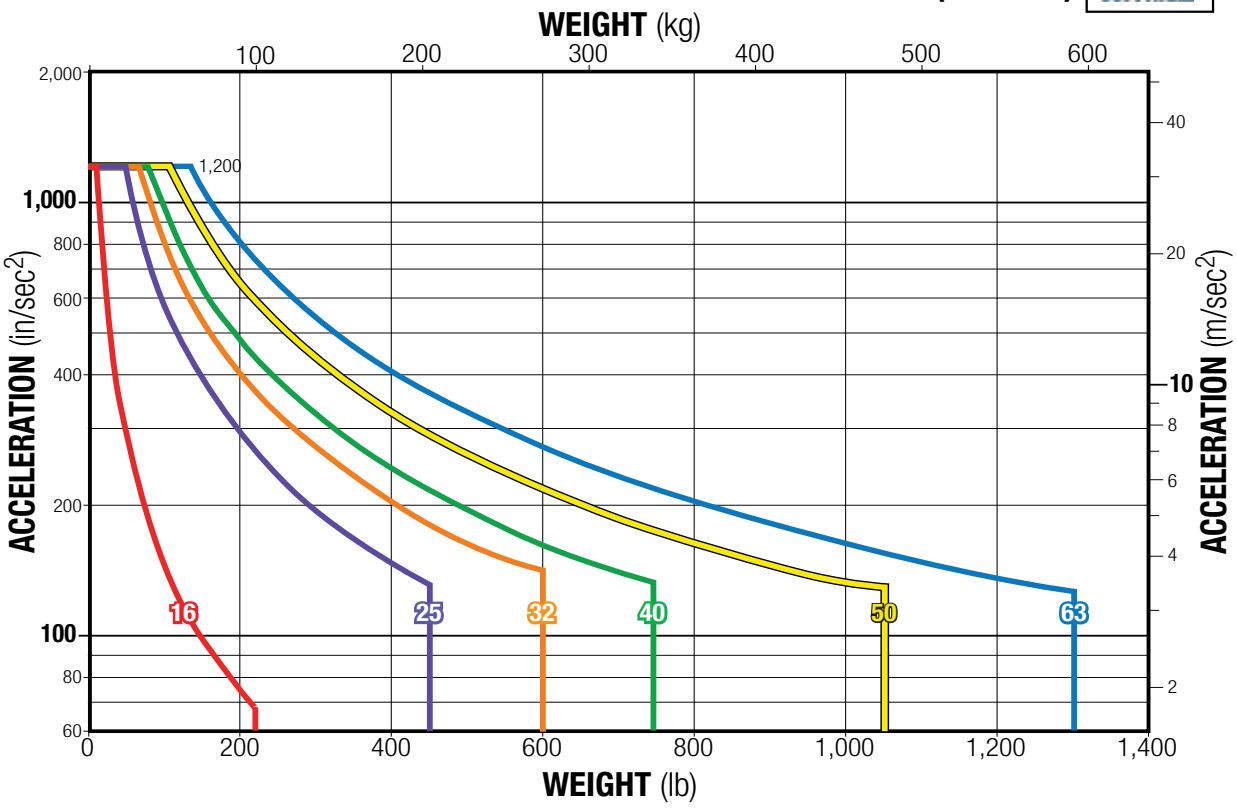

MOUNTING PLATE REQUIREMENTS (P ONLY)

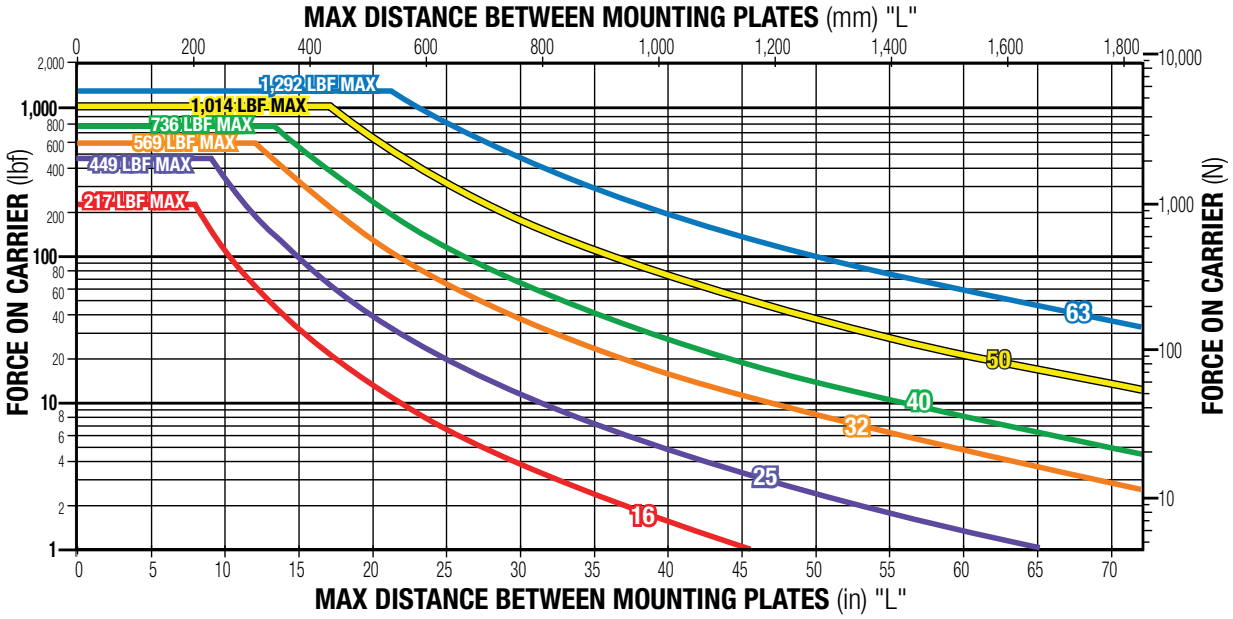

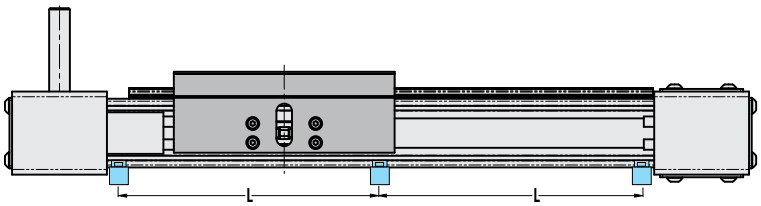

MXB-P Belt Driven Actuator

SIZING SOFTWARE AVAILABLE AT WWW.TOLOMATIC.COM

MOMENT AND LOAD CAPACITY

⚠ Mating surface of mounted component must maintain a flatness of at least .0015" [0.040 mm]

STANDARD CARRIER

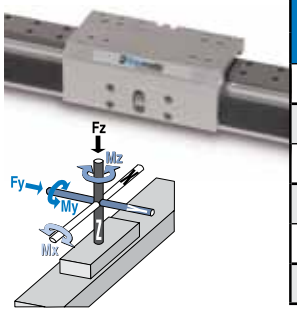

SIZE	MAXIMUM BENDING MOMENTS						MAXIMUM LOAD				MAXIMUM THRUST	
	Mx		My		Mz		Fy		Fz			
	in-lbs	N-m	in-lbs	N-m	in-lbs	N-m	lbf	N	lbf	N	lbf	N
16	39	4.5	339	38.3	339	38.3	217	966	217	966	38	169
25	126	14.3	502	56.7	377	42.6	449	1,996	449	1,996	151	672
32	226	25.6	1,344	152	1,344	152	569	2,531	569	2,531	209	930
40	604	68.2	1,913	216	1,913	216	736	3,274	736	3,274	250	1,112
50	811	91.7	3,483	394	3,483	394	1,014	4,510	1,014	4,510	325	1,446
63	1,019	115	5,339	603	5,339	603	1,292	5,745	1,292	5,745	418	1,859

DC AUXILIARY CARRIER

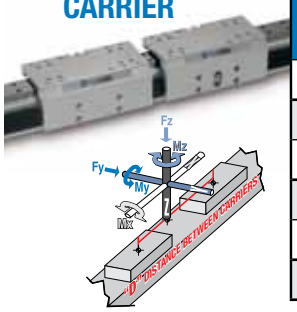

SIZE	"D" MINIMUM		MAXIMUM BENDING MOMENTS*						MAXIMUM LOAD			
			Mxa		Mya		Mza		Fya		Fza	
	in	mm	in-lbs	N-m	in-lbs	N-m	in-lbs	N-m	lbf	N	lbf	N
16	5.0	127	79	8.9	620	70.0	620	70.0	434	1,932	434	1,932
25	6.0	152	252	28.5	1,610	182	1,610	182	898	3,993	898	3,993
32	7.0	178	453	51.1	2,202	249	2,202	249	1,138	5,063	1,138	5,063
40	8.5	216	1,208	136	3,601	407	3,601	407	1,472	6,549	1,472	6,549
50	8.6	218	1,623	183	4,966	561	4,966	561	2,028	9,020	2,028	9,020
63	13.0	330	2,038	230	9,508	1,074	9,508	1,074	2,583	11,490	2,583	11,490

*At minimum "D" distance - see page 13 for bending moments at greater distances

SIZING SOFTWARE

Use sizing software or call Tolomatic (1-800-328-2174) with application information. We will provide any assistance needed to determine the proper MXB belt-driven actuator.

⚠ ***The above ratings are the maximum values for shock-free, vibration-free operation in a typical industrial environment, which must not be exceeded even in dynamic operation. Contact Tolomatic for assistance in selecting the most appropriate actuator for your application.***

SPEED FACTOR

FOR APPLICATIONS WITH HIGH SPEED OR SIGNIFICANT SHOCK AND VIBRATION: Calculated values of loads and bending moments must be increased by speed factor from the graph at right to obtain full rated life of profiled rail bearing system.

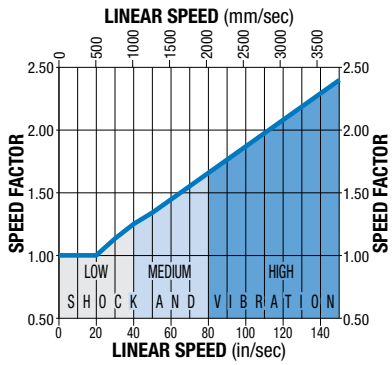

The moment and load capacity of the actuator's bearing system is based on an L10 life of 200,000,000 linear inches of travel. Life of the actuator will vary for each application depending on the combined loads, motion parameters and operating conditions. The load factor (L_F) for each application must not exceed a value of 1 (as calculated below). Exceeding a load factor of 1 will diminish the actuator's rated life.

$$L_F = \frac{Mx}{Mx_{max}} + \frac{My}{My_{max}} + \frac{Mz}{Mz_{max}} + \frac{Fy}{Fy_{max}} + \frac{Fz}{Fz_{max}} \leq 1$$

With combined loads, L_F must not exceed the value 1.

PROFILED RAIL LUBRICATION

Proper lubrication of profiled rail bearing system is essential for normal operation and achievement of full rated life of MX--P actuators. Lubrication should be performed at intervals of 4,000,000 inches of travel or once every year, whichever occurs first. **However, operating conditions such as high speed or significant shock and vibration may require more frequent lubrication.** Please consult Tolomatic for recommendations.

Recommended grease types:

1. Refined mineral oil-based multi-purpose grease with lithium thickening agent.
2. High-grade synthetic oil-based grease with urea thickening agent.

SIZING SOFTWARE AVAILABLE AT WWW.TOLOMATIC.COM

LOAD DEFLECTION

DEFLECTION TESTING WAS DONE UNDER THESE CRITERIA:

1.) Actuator was properly mounted with distance between mounting plates within recommendations *(see Mounting Plate Requirements page 11)*

2.) Deflection was measured at 12" from center of carrier as shown

DEFLECTION ABOUT X AXIS

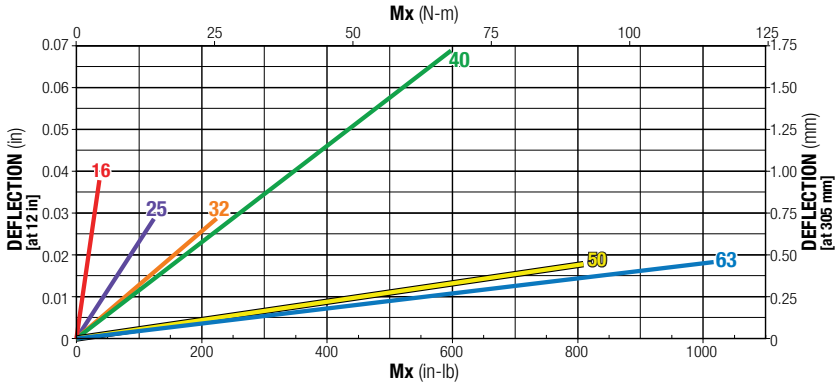

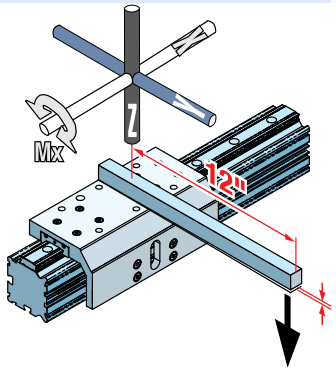

DEFLECTION ABOUT Y AXIS

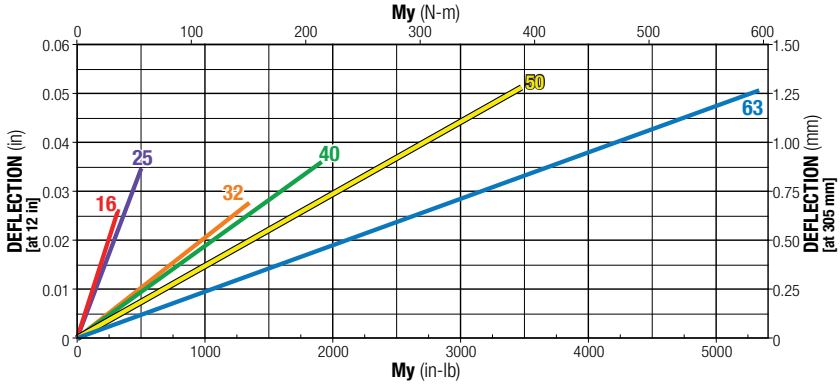

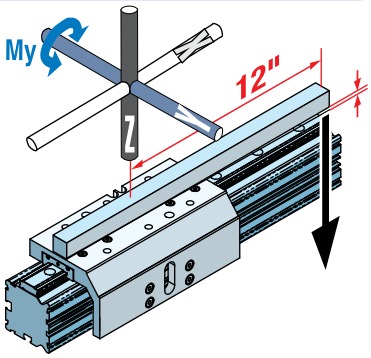

DEFLECTION ABOUT Z AXIS

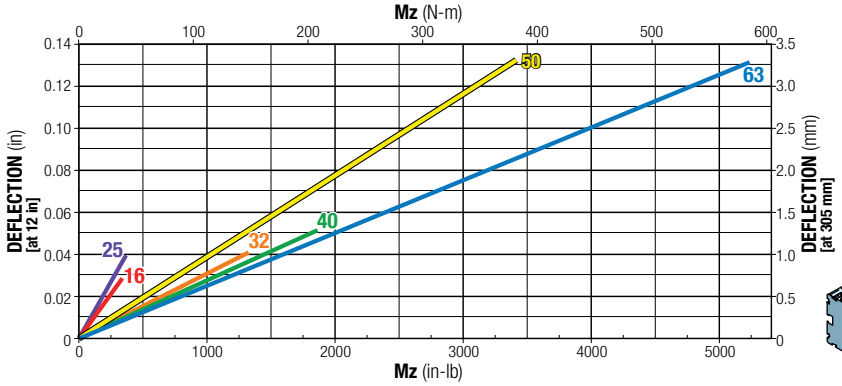

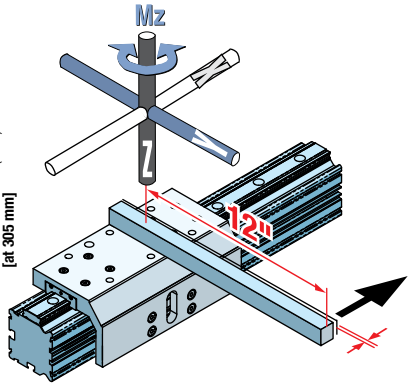

AUXILIARY CARRIER BENDING MOMENTS WITH INCREASED "D" DISTANCE BETWEEN CARRIERS

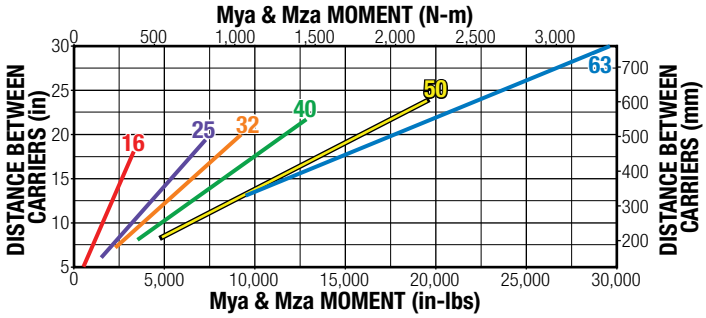

RATINGS WERE CALCULATED UNDER THESE CRITERIA:

1.) Coupling between carriers is rigid.

2.) Load is equally distributed between carriers.

3.) Coupling device applies no misalignment loads to carriers.

ACTUATOR & OPTION DIMENSIONS

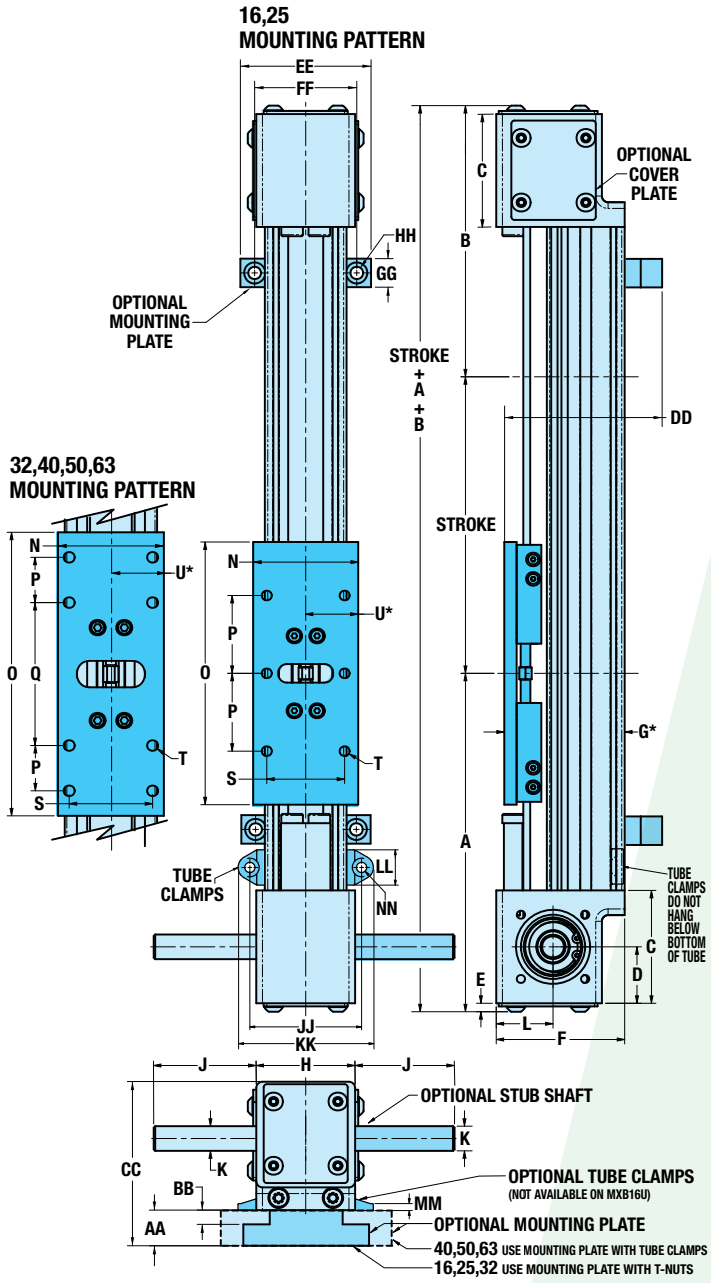

	MXB16	MXB25	MXB32	MXB40	MXB50	MXB63
A	5.33	6.85	7.39	8.53	8.85	10.83
mm	135.3	173.9	187.8	216.6	224.7	275.1
B	4.69	5.49	6.09	7.59	8.07	10.33
mm	119.0	139.3	154.7	192.7	205.0	262.1
C	2.00	2.28	2.20	3.10	3.25	3.79
mm	50.8	58.0	55.9	78.7	82.6	96.1
D	1.00	1.14	1.00	1.55	1.58	1.79
mm	25.4	29.0	25.4	39.4	40.0	45.3
E	0.15	0.17	0.17	0.17	0.17	0.17
mm	3.8	4.4	4.4	4.4	4.4	4.4
F	2.08	2.60	3.05	3.69	4.35	5.48
mm	52.8	66.0	77.5	93.8	110.6	139.3
G*	1.77	2.44	3.05	3.48	4.31	5.34
mm	45.3	61.9	77.4	88.3	109.6	135.5
H	1.75	2.00	2.75	3.25	3.88	4.38
mm	44.5	50.8	69.9	82.6	98.4	111.1
J	**	2.27	2.27	1.87	1.87	1.87
mm	**	57.7	57.7	47.5	47.5	47.5
K	Ø.375	Ø.500	Ø.500	Ø.500	Ø.500	Ø.500
mm	Ø9.53	Ø12.70	Ø12.70	Ø12.70	Ø12.70	Ø12.70
L	1.04	1.15	1.10	1.56	1.63	2.06
mm	26.4	29.2	27.9	39.7	41.5	52.2
N	1.38	2.13	2.50	3.50	3.75	4.50
mm	34.9	54.0	63.5	88.9	95.3	114.3
O	4.33	5.31	6.69	7.87	8.50	12.00
mm	110.0	135.0	170.0	200.0	216.0	304.8
P	1.57	1.57	1.07	1.00	1.00	1.57
mm	40.0	40.0	27.1	25.4	25.4	40.0
Q	-	-	3.37	4.50	2.75	5.12
mm	-	-	87.7	114.3	69.8	130.0
S	1.10	1.57	1.97	2.83	3.13	3.87
mm	28.0	40.0	50.0	72.0	79.4	98.3
T	#8-32(6)	1/4-20(6)	5/16-18(8)	5/16-18(8)	5/16-18(8)	3/8-16(8)
mm	M4x0.7	M6x1.0	M8x1.25	M8x1.25	M8x1.25	M10x1.5
U*	0.69	1.07	1.25	1.75	1.88	2.25
mm	17.5	27.0	31.8	44.5	47.7	57.2

OPTIONAL MOUNTING PLATES

AA	0.63	0.63	0.75	1.00	1.25	1.00
mm	15.9	15.9	19.1	25.4	31.8	25.4
BB	0.25	0.25	0.30	–	–	–
mm	6.4	6.4	7.6	–	–	–
CC	2.71	3.22	3.80	4.70	5.60	6.48
mm	68.7	81.9	96.5	119.4	119.4	164.6
DD	2.4	3.06	3.75	4.18	5.01	6.04
mm	60.9	77.7	95.2	106.1	127.4	153.3
EE	2.36	2.50	3.40	5.00	5.60	8.00
mm	60.0	63.5	86.4	127.0	142.2	203.2
FF	1.75	2.00	2.75	4.41	5.00	7.00
mm	44.5	50.8	59.9	112.0	127.0	177.8
GG	1.00	1.00	1.00	0.79	0.79	1.00
mm	25.4	25.4	25.4	20.1	20.1	25.4
HH	Ø.22 THRU ⌴ Ø.37 ↧ .22 (2)	Ø.22 THRU ⌴ Ø.37 ↧ .22 (2)	Ø.28 THRU ⌴ Ø.44 ↧ .28 (2)	Ø.28 THRU (2)	Ø.28 THRU (2)	Ø.28 THRU (2)
mm	Ø5.6 THRU ⌴ Ø9.4 ↧ 5.6 (2)	Ø5.6 THRU ⌴ Ø9.4 ↧ 5.6 (2)	Ø7.1 THRU ⌴ Ø11.2 ↧ 7.1 (2)	Ø7.1 THRU (2)	Ø7.1 THRU (2)	Ø7.1 THRU (2)

⚠ *In order for the actuator to operate properly, dimensions "G" and "U" must not vary more than ±0.020 in *[0.51mm]* over the entire length of the stroke.

**	MXB16
(LMI) J	0.59
mm	15.0
(RP) J	1.83
mm	46.6

OPTIONAL TUBE CLAMPS

JJ	-	2.24	2.92	3.26	3.84	5.19
mm	-	57.0	74.1	82.7	97.5	131.7
KK	-	2.72	3.44	3.81	4.39	5.93
mm	-	69.0	87.4	96.7	111.5	150.7
LL	-	0.71	0.63	0.55	0.55	0.75
mm	-	18.0	16.0	14.0	14.0	19.0
MM	-	0.14	0.17	0.15	0.15	0.24
mm	-	3.6	4.3	3.8	3.8	6.1
NN	-	0.20	0.28	0.28	0.28	0.42
mm	-	5.2	7.1	7.1	7.1	10.7

ACTUATOR DIMENSIONS

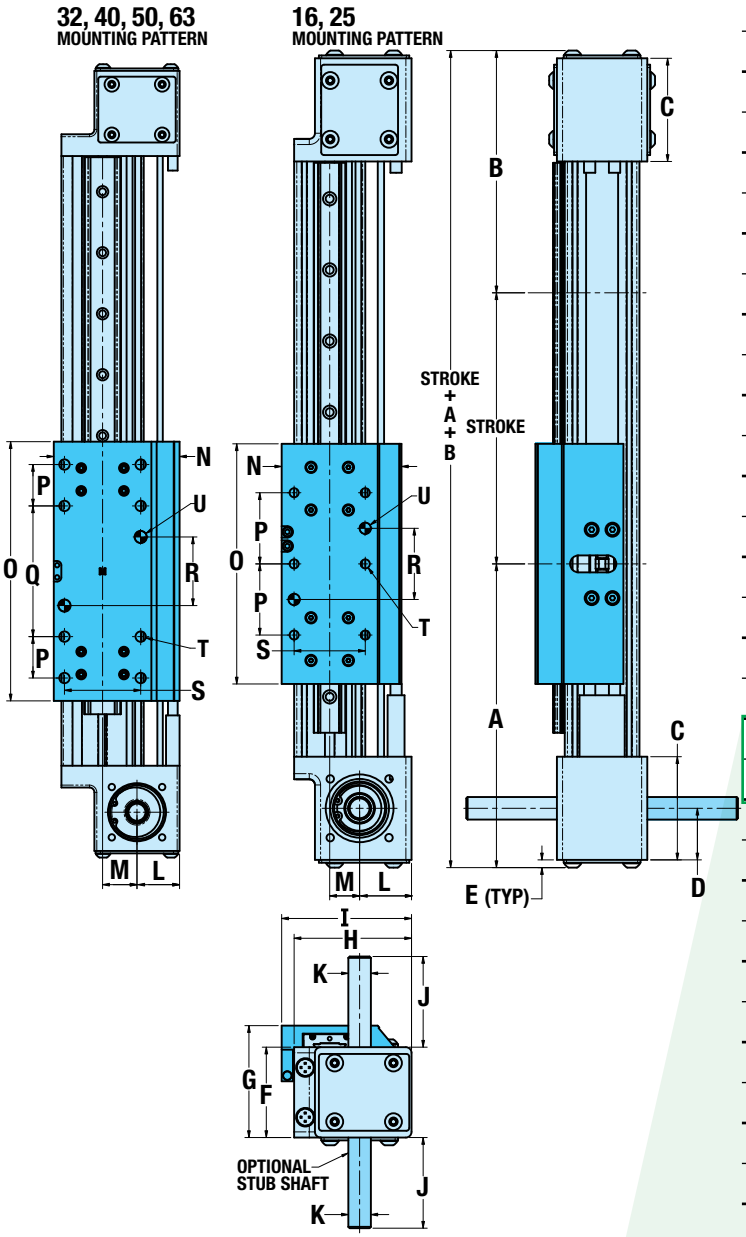

	MXB16	MXB25	MXB32	MXB40	MXB50	MXB63
A	5.33	6.85	7.39	8.53	8.85	10.83
mm	135.3	173.9	187.8	216.6	224.7	275.1
B	4.69	5.49	6.09	7.59	8.07	10.33
mm	119.0	139.3	154.7	192.7	205.0	262.1
C	2.00	2.28	2.20	3.10	3.25	3.79
mm	50.8	58.0	55.9	78.7	82.6	96.1
D	1.00	1.14	1.00	1.55	1.58	1.79
mm	25.4	29.0	25.4	39.4	40.0	45.3
E	0.15	0.17	0.17	0.17	0.17	0.17
mm	3.8	4.4	4.4	4.4	4.4	4.4
F	1.75	2.00	2.75	3.25	3.88	4.38
mm	44.5	50.8	69.9	82.6	98.4	111.1
G	2.10	2.48	3.33	3.88	5.10	5.73
mm	53.2	62.9	84.6	98.7	129.6	145.6
H	2.08	2.60	3.05	3.69	4.35	5.48
mm	52.8	66.0	77.5	93.8	110.6	139.3
I	2.16	2.87	3.25	4.09	4.64	5.79
mm	54.8	73.0	82.5	103.9	117.9	147.1
J	**	2.27	2.27	1.87	1.87	1.87
mm	**	57.7	57.7	47.5	47.5	47.5
K	Ø.375	Ø.500	Ø.500	Ø.500	Ø.500	Ø.500
mm	Ø9.53	Ø12.70	Ø12.70	Ø12.70	Ø12.70	Ø12.70
L	1.04	1.15	1.10	1.56	1.63	2.06
mm	26.4	29.2	27.9	39.7	41.5	52.2
M	0.45	0.66	0.89	0.87	1.17	1.46
mm	11.4	16.8	22.6	22.2	29.8	37.1
N	1.78	2.65	3.25	3.85	4.62	5.93
mm	45.3	67.4	82.5	97.8	117.4	150.6
O	4.33	5.31	6.69	7.87	8.50	12.00
mm	110.0	135.0	170.0	200.0	216.0	304.8
P	1.57	1.57	1.07	1.00	1.00	1.57
mm	40.0	40.0	27.1	25.4	25.4	40.0
Q	—	—	3.37	4.50	2.75	5.12
mm	—	—	87.7	114.3	69.8	130.0
R	1.57	1.57	1.77	2.50	1.50	2.56
mm	40.0	40.0	45.0	63.5	38.1	65.0
S	1.10	1.57	1.97	2.83	3.13	3.87
mm	28.0	40.0	50.0	72.0	79.4	98.3
T	#8-32(6)	1/4-20(6)	5/16-18(8)	5/16-18(8)	5/16-18(8)	3/8-16(8)
mm	M4x0.7	M6x1.0	M8x1.25	M8x1.25	M8x1.25	M10x1.5
U	Ø.1583 / .1573 (2) ↧.250	Ø.2520 / .2510 (2) ↧.250	Ø.3145 / .3135 (2) ↧.375	Ø.3145 / .3135 (2) ↧.500	Ø.3145 / .3135 (2) ↧.500	Ø.3770 / .3760 (2) ↧.500
mm	Ø4.045 / 4.020 ↧6.35	Ø6.045 / 6.020 ↧6.35	Ø8.045 /8.020 ↧9.53	Ø8.045 /8.020 ↧12.70	Ø8.045 /8.020 ↧12.70	Ø10.045 /10.020 ↧12.70

**	MXB16
(LMI) J	0.59
mm	15.0
(RP) J	1.83
mm	46.6

OPTION DIMENSIONS

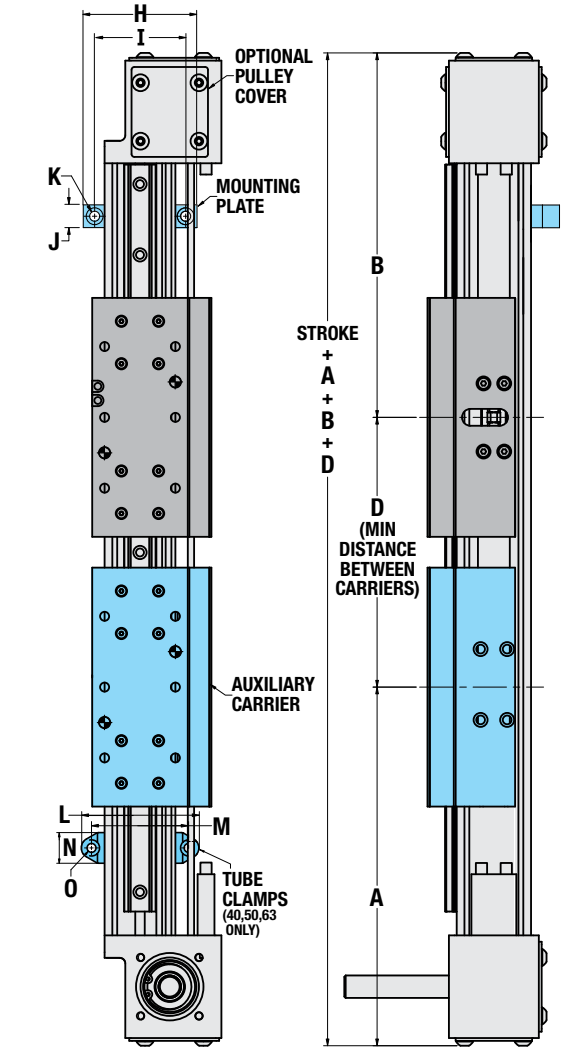

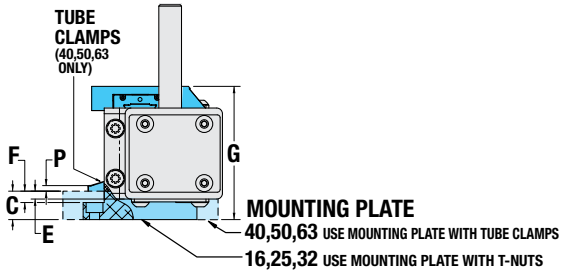

	MXB16	MXB25	MXB32	MXB40	MXB50	MXB63
A	5.33	6.85	7.39	8.53	8.85	10.83
mm	135.3	173.9	187.8	216.6	224.7	275.1
B	4.69	5.49	6.09	7.59	8.07	10.33
mm	119.0	139.3	154.7	192.7	205.0	262.1
AUXILIARY CARRIER						
D	5.00	6.00	7.00	8.50	8.60	13.00
mm	127.0	152.4	177.0	215.9	216.4	330.2
MOUNTING PLATE						
C	0.63	0.63	0.75	1.00	1.25	1.00
mm	15.9	15.9	19.1	25.4	31.8	25.4
E	0.28	0.17	0.29	0.37	0.39	0.22
mm	7.2	4.4	7.2	9.3	9.8	5.6
F	0.25	0.25	0.30	–	–	–
mm	6.4	6.4	7.6	–	–	–
G	2.44	2.93	3.80	4.52	5.96	6.51
mm	61.9	74.4	96.5	114.8	151.4	165.4
H	2.36	2.50	3.40	5.00	5.60	8.00
mm	60.0	63.5	86.4	127.0	142.2	203.2
I	1.75	2.00	2.75	4.41	5.00	7.00
mm	44.5	50.8	69.9	112.0	127.0	177.8
J	1.00	1.00	1.00	0.79	0.79	1.00
mm	25.4	25.4	25.4	20.1	20.1	25.4
K	Ø.22 THRU ⌴ Ø.37 ↧ .22 (2)	Ø.22 THRU ⌴ Ø.37 ↧ .22 (2)	Ø.28 THRU ⌴ Ø.44 ↧ .28 (2)	Ø.28 THRU (2)	Ø.28 THRU (2)	Ø.28 THRU (2)
mm	Ø5.6 THRU ⌴ Ø9.4 ↧ 5.6 (2)	Ø5.6 THRU ⌴ Ø9.4 ↧ 5.6 (2)	Ø7.1 THRU ⌴ Ø11.2 ↧ 7.1 (2)	Ø7.1 THRU (2)	Ø7.1 THRU (2)	Ø7.1 THRU (2)
TUBE CLAMPS						
L	–	–	–	3.81	4.39	5.93
mm	–	–	–	96.8	111.5	150.6
M	–	–	–	3.26	3.84	5.19
mm	–	–	–	82.8	97.5	131.8
N	–	–	–	0.55	0.55	0.75
mm	–	–	–	14.0	14.0	19.1
O	–	–	–	0.28	0.28	0.42
mm	–	–	–	7.1	7.1	10.7
P	–	–	–	0.15	0.15	0.24
mm	–	–	–	3.8	3.8	6.1

3D CAD AVAILABLE AT WWW.TOLOMATIC.COM
WWW.3DCONTENTCENTRAL.COM

DIRECT DRIVE MOTOR MOUNTING

MXB-U

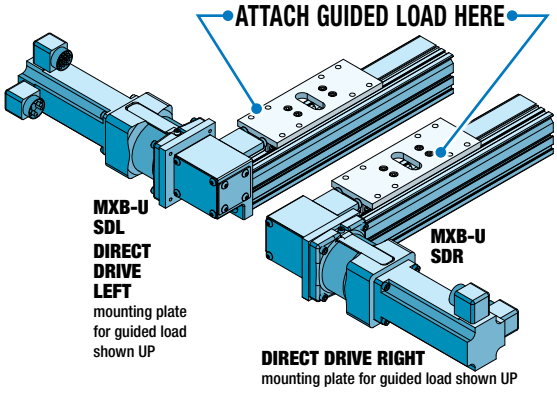

LARGE FRAME MOTORS AND SMALLER SIZE ACTUATORS: Cantilevered motors need to be supported if subjected to continuous rapid reversing duty and/or under dynamic conditions.

MXB-P

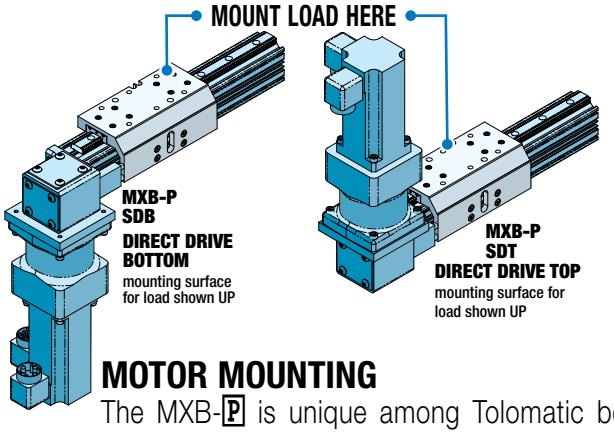

MOTOR MOUNTING

The MXB-P is unique among Tolomatic belt driven actuators. The mounting surface of the carrier is located 90° from the motion of the belt. The side opposite the belt is reserved for switch placement. The bottom of the actuator is reserved for mounting. If the motor is mounted in the SDT (direct drive top orientation), be sure the load mounted to the carrier does not interfere with the motor.

REDUCTION DRIVE MOTOR MOUNTING

MXB-U

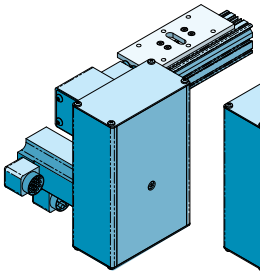

REDUCTION DRIVE BOTTOM LEFT (SDBL)
mounting surface
for load shown UP

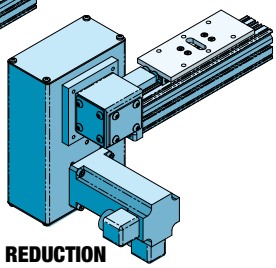

REDUCTION DRIVE BOTTOM RIGHT (SDBR)
mounting surface for load
shown UP

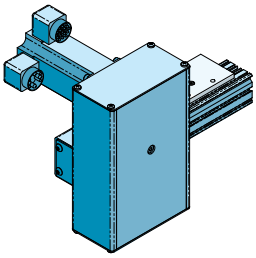

REDUCTION DRIVE TOP LEFT (SDTL)
mounting surface
for load shown UP

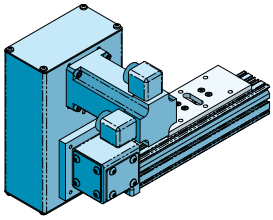

REDUCTION DRIVE TOP RIGHT (SDTR)
mounting surface
for load shown UP

MXB-P

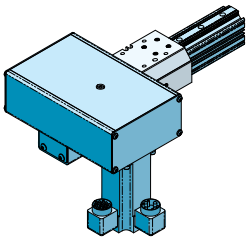

REDUCTION DRIVE RIGHT BOTTOM (SDRB)
mounting surface
for load shown UP

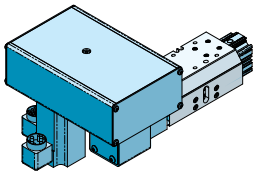

REDUCTION DRIVE LEFT BOTTOM (SDLB)
mounting surface
for load shown UP

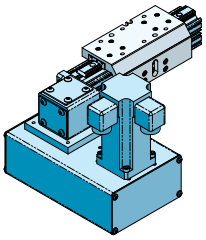

REDUCTION DRIVE RIGHT TOP (SDRT)
mounting surface
for load shown UP

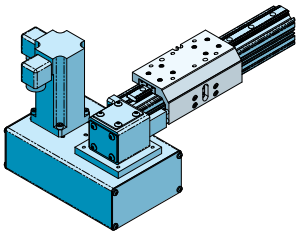

REDUCTION DRIVE LEFT TOP (SDLT)
mounting surface
for load shown UP

See tolomatic.com for 3D solid model(s) with motor mounting dimensions

SWITCHES

SPECIFICATIONS

⚠ NOTE: Switches NOT available for MXB-U

MX products offer a wide range of sensing choices. There are 12 switch choices: reed, solid state PNP (sourcing) or solid state NPN (sinking); in normally open or normally closed; with flying leads or quick-disconnect.

Commonly used for end-of-stroke positioning, these switches allow drop-in installation anywhere along the entire actuator length. The one-piece design includes the retained fastening hardware and is designed for the slot opposite the belt on the MXB (upper slot on 40, 50, 63 sizes). The magnet is located in a slot on the carrier. See the dimensional drawings on page 19 for details of magnet and switch locations. Switches and magnets can be installed in the field at any time.

Switches are used to send digital signals to PLC (programmable logic controller), TTL, CMOS circuit or other controller device. Switches contain reverse polarity protection. Solid state QD cables are shielded; shield should be terminated at flying lead end.

RoHS COMPLIANT CE

All switches are CE rated and are RoHS compliant. Switches feature bright red or yellow LED signal indicators; solid state switches also have green LED power indicators.

	Order Code	Part Number	Lead	Switching Logic	Power LED	Signal LED	Operating Voltage	**Power Rating (Watts)	Switching Current (mA max.)	Current Consumption	Voltage Drop	Leakage Current	Temp. Range	Shock / Vibration
REED	RY	8100-9082	5m	SPST Normally Open	—	Red	5 - 240 AC/DC	**10.0	100mA	—	3.0 V max.	—	14 to 158°F [-10 to 70°C]	50 G / 9 G
	RK	8100-9083	QD*											
	NY	8100-9084	5m	SPST Normally Closed	—	Yellow	5 - 110 AC/DC							
	NK	8100-9085	QD*											
SOLID STATE	TY	8100-9088	5m	PNP (Sourcing) Normally Open	Green	Yellow	10 - 30 VDC	**3.0	100mA	20 mA @ 24V	2.0 V max.	0.05 mA max.		
	TK	8100-9089	QD*											
	KY	8100-9090	5m	NPN (Sinking) Normally Open	Green	Red								
	KK	8100-9091	QD*											
	PY	8100-9092	5m	PNP (Sourcing) Normally Closed	Green	Yellow								
	PK	8100-9093	QD*											
	HY	8100-9094	5m	NPN (Sinking) Normally Closed	Green	Red								
	HK	8100-9095	QD*											

*QD = Quick-disconnect Enclosure classification IEC 529 IP67 (NEMA 6) CABLES: Robotic grade, oil resistant polyurethane jacket, PVC insulation

⚠ **WARNING: Do not exceed power rating (Watt = Voltage x Amperage). Permanent damage to sensor will occur.

SWITCH INSTALLATION AND REPLACEMENT

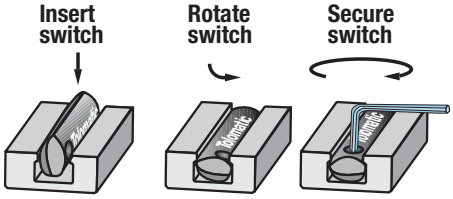

Place switch in side groove on tube at desired location with "Tolomatic" facing outward. While applying light pressure to the switch, rotate the switch halfway into the groove. Maintaining light pressure, rotate the switch in the opposite direction until it is fully inside the groove with "Tolomatic" visible. Re-position the switch to the exact location and lock the switch securely into place by tightening the screw on the switch.

SWITCHES

NOTE: Switches NOT available for MXB-U

WIRING DIAGRAMS

RY, #8100-9082, • RK, #8100-9083
REED • NORMALLY OPEN

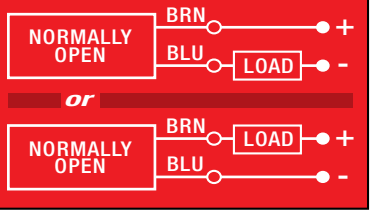

TY, #8100-9088, • TK, #8100-9089
SOLID STATE • NORMALLY OPEN • PNP

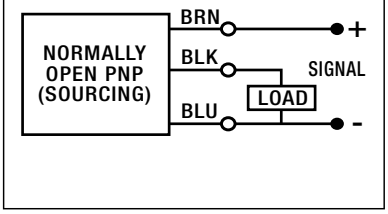

KY, #8100-9090, • KK, #8100-9091
SOLID STATE • NORMALLY OPEN • NPN

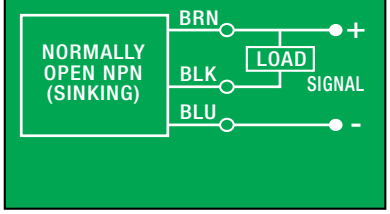

NY, #8100-9084, • NK, #8100-9085
REED • NORMALLY CLOSED

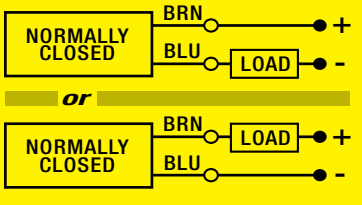

PY, #8100-9092, • PK, #8100-9093
SOLID STATE • NORMALLY CLOSED • PNP

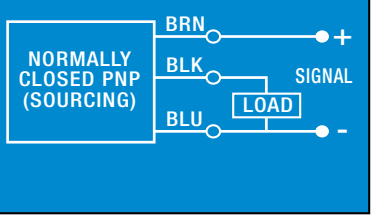

HY, #8100-9094, • HK, #8100-9095
SOLID STATE • NORMALLY CLOSED • NPN

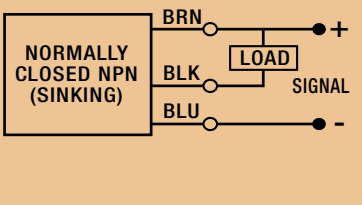

QUICK DISCONNECT MALE PLUG PINOUT

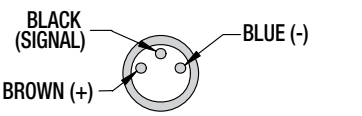

#8100-9080 QUICK DISCONNECT FEMALE SOCKET PINOUT

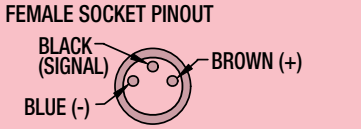

SWITCH DIMENSIONS

Y - direct connect

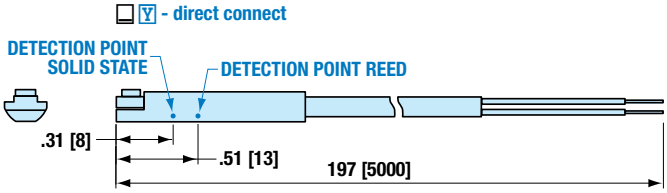

K - QD (Quick-disconnect) switch

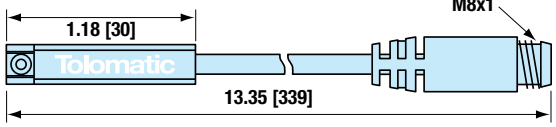

8100-9080 - QD Cable

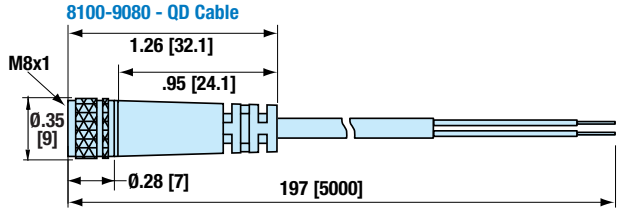

Dimensions in inches [brackets indicate dimensions in millimeters]

MOUNTING DIMENSIONS

16

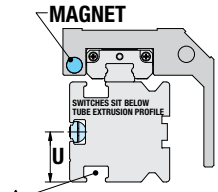

SWITCH CANNOT BE PUT IN BOTTOM SLOT; IT WILL NOT BE TRIGGERED BY MAGNET

25, 32

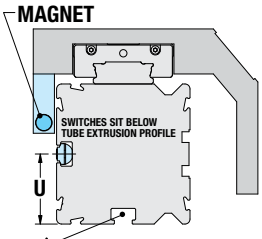

SWITCH CANNOT BE PUT IN BOTTOM SLOT; IT WILL NOT BE TRIGGERED BY MAGNET

40, 50, 63

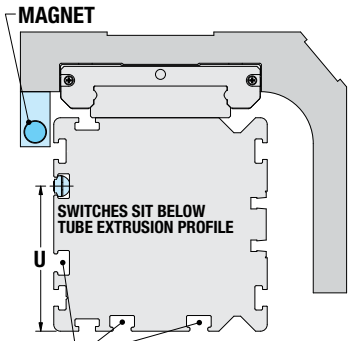

SWITCH CANNOT BE PUT IN LOWER SIDE OR BOTTOM SLOTS; IT WILL NOT BE TRIGGERED BY MAGNET

NOTE: When ordering switches as a service part, Magnet Housing Kit (light blue in drawings) is required if actuator was not originally ordered with switches.

SWITCH MOUNTING

	16	25	32	40	50	63
U	0.31	0.79	1.06	0.81	1.08	1.50
mm	7.9	20.0	27.0	20.5	27.4	38.0

APPLICATION DATA WORKSHEET

Fill in known data. Not all information is required for all applications

ORIENTATION

☐ Horizontal ☐ Side ☐ Horizontal Down ☐ Vertical ☐ Angled °

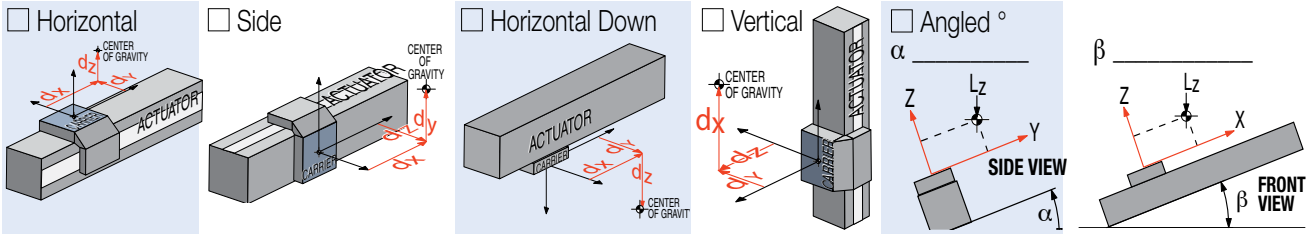

☐ Load attached to carrier OR ☐ Load supported by other mechanism

DISTANCE FROM CENTER OF CARRIER TO LOAD CENTER OF GRAVITY

d_x _____
d_y _____
d_z _____

☐ inch (U.S. Standard) ☐ millimeters (Metric)

STROKE LENGTH _____

☐ inch (SK) (U.S. Standard) ☐ millimeters (SM) (Metric)

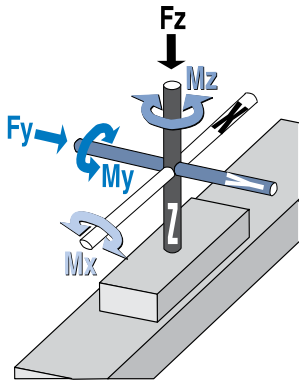

BENDING MOMENTS APPLIED TO CARRIER

M_x _____
M_y _____
M_z _____

☐ in.-lbs. (U.S. Standard) ☐ N-m (Metric)

PRECISION

Repeatability _____

☐ inch ☐ millimeters

⚠ NOTE: If load or force on carrier changes during cycle use the highest numbers for calculations

LOAD _____

☐ lb. (U.S. Standard) ☐ kg. (Metric)

FORCES APPLIED TO CARRIER

F_z _____
F_y _____

☐ lbf. (U.S. Standard) ☐ N (Metric)

OPERATING ENVIRONMENT

Temperature, Contamination, etc.

_____

_____

_____

MOTION PROFILE

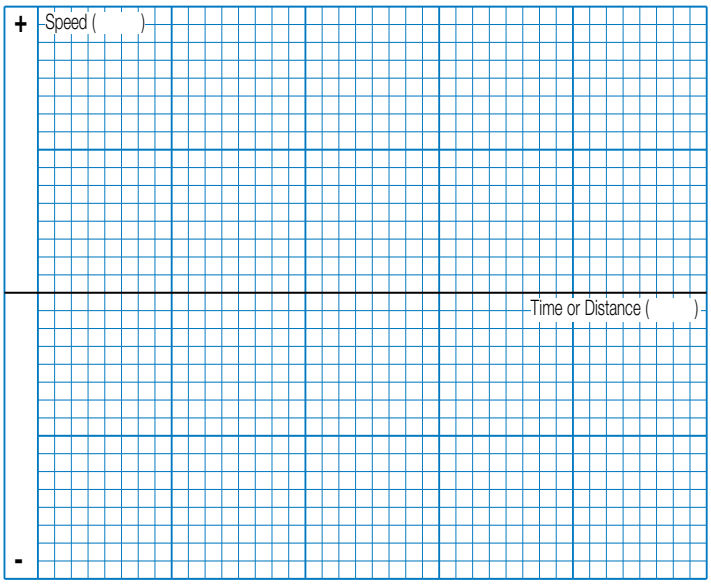

Graph your most demanding cycle, including accel/decel, velocity and dwell times. You may also want to indicate load variations and I/O changes during the cycle. Label axes with proper scale and units.

MOVE PROFILE

Move Distance _____

☐ inch ☐ millimeters

Dwell Time After Move _____

Max. Speed _____

☐ in/sec ☐ mm/sec

MOVE TIME _____

☐ sec

NO. OF CYCLES _____

☐ per minute ☐ per hour

CONTACT INFORMATION

Name, Phone, Email
Co. Name, Etc.

_____

_____

_____

STOP **USE THE TOLOMATIC SIZING AND SELECTION SOFTWARE AVAILABLE ON-LINE AT www.tolomatic.com OR... CALL TOLOMATIC AT 1-800-328-2174.** We will provide any assistance needed to determine the proper MX actuator for the job.

FAX 1-763-478-8080 **EMAIL help@tolomatic.com**

SELECTION GUIDELINES

The process of selecting a belt driven actuator for a given application can be complex. It is highly recommended that you contact Tolomatic or a Tolomatic distributor for assistance in selecting the best actuator for your application. The following overview of the selection guidelines are for educational purposes only.

1 CHOOSE ACTUATOR SIZE

Choose an actuator that has the thrust, speed and moment load capacity to move the load.

A) For maximum thrust use the table below.

B) Maximum speed of MXB-U 200 in/sec (5 m/sec); Maximum speed of MXB-P 150 in/sec (3.8 m/sec).

C) For MXB-P moment and load capacities see tables on page 12.

SIZE	MAXIMUM THRUST	
	lbf	N
16	38	*169*
25	151	*672*
32	209	*930*
40	250	*1112*
50	325	*1446*
63	418	*1859*

2 COMPARE LOAD TO MAXIMUM LOAD CAPACITIES

Calculate the application load (combination of load mass and forces applied to the carrier) and application bending moments (sum of all moments Mx, My, and Mz applied to the carrier). Be sure to evaluate the magnitude of dynamic inertia moments. When a rigidly attached load mass is accelerated or decelerated, its inertia induces bending moments on the carrier. Careful attention to how the load is decelerated at the end of the stroke is required for improved actuator performance and application safety. If either load or any of the moments exceed figures indicated in the Moment and Load Capacity tables (page 12) for the actuator consider:

1) A larger actuator size

2) Auxiliary carrier

3) External guide system (if the load is externally supported and guided, consider using MXB-U)

3 CALCULATE LOAD FACTOR (LF)

For loads with a center of gravity offset from the carrier account for both applied (static) and dynamic loads. The load factor (L_F) must not exceed the value of 1.

$$L_F = \frac{Mx}{Mx_{max}} + \frac{My}{My_{max}} + \frac{Mz}{Mz_{max}} + \frac{Fy}{Fy_{max}} + \frac{Fz}{Fz_{max}} \leq 1$$

If L_F does exceed the value of 1, consider the three choices listed in step #2.

4 ESTABLISH YOUR MOTION PROFILE AND CALCULATE ACCELERATION RATE

Using the application stroke length and maximum carrier velocity (or time to complete the linear motion), establish the motion profile. Select either triangular (accel-decel) or trapezoidal (accel-constant speed-decel) profile. Now calculate the maximum acceleration and deceleration rates of the move. Acceleration/deceleration should not exceed 1200 in/sec^2 (30.48 m/sec^2). Also, do not exceed safe rates of dynamic inertia moments determined in step #3.

SPEED FACTOR

FOR APPLICATIONS WITH HIGH SPEED OR SIGNIFICANT SHOCK AND VIBRATION: Calculated values of loads and bending moments must be increased by speed factor from the graph below to obtain full rated life of profiled rail bearing system.

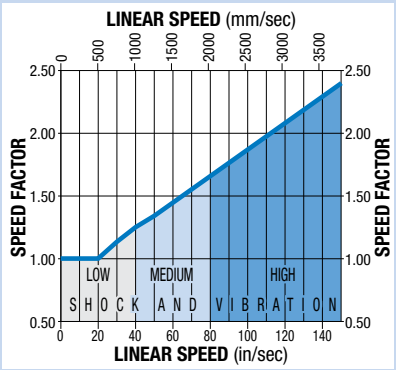

5 SELECT MOTOR (GEARHEAD IF NECESSARY) AND DRIVE

To help select a motor and drive, use the sizing equations located in the Engineering Resources section of the Tolomatic Electric Products Catalog (#3600-4609) to calculate the application thrust and torque requirements. Refer to Motor sections to determine the motor and drive.

6 DETERMINE MOUNTING PLATE REQUIREMENTS

- Consult the Mounting Plate Requirements graph for the model selected (page 11)
- Cross reference the application load and maximum distance between supports
- Select the appropriate number of mounting plates

7 CONSIDER OPTIONS

- Choose metric or inch (U.S. standard) load mounting. When ordering use SK for inch and SM for metric.
- Switches - Reed, Solid State PNP or NPN, all available normally open or normally closed

USE THE TOLOMATIC SIZING AND SELECTION SOFTWARE AVAILABLE ON-LINE AT www.tolomatic.com OR... CALL TOLOMATIC AT 1-800-328-2174. We will provide any assistance needed to determine the proper MX actuator for the job.

SERVICE PARTS ORDERING

SWITCHES

Switches for MXB include retained mounting hardware and are the same for all actuator sizes and bearing styles

Code	Part Number	Lead	Normally	Sensor Type
R Y	8100-9082	5m (197 in)	Open	Reed
R K	8100-9083*	Quick-disconnect		
N Y	8100-9084	5m (197 in)	Closed	Reed
N K	8100-9085*	Quick-disconnect		
T Y	8100-9088	5m (197 in)	Open	Solid State PNP
T K	8100-9089*	Quick-disconnect		
K Y	8100-9090	5m (197 in)	Open	Solid State NPN
K K	8100-9091*	Quick-disconnect		
P Y	8100-9092	5m (197 in)	Closed	Solid State PNP
P K	8100-9093*	Quick-disconnect		
H Y	8100-9094	5m (197 in)	Closed	Solid State NPN
H K	8100-9095*	Quick-disconnect		

*Also order mating QD cable #8100-9080

	8100-9080	Mating QD (Quick-disconnect) cable 197 in. (5m)

⚠ NOTE: Switches NOT available for MXB-U

⚠ NOTE: When ordering switches as service part, Magnet Housing Kit is required if actuator was not originally ordered with switches

OPTIONS

ACTUATOR SIZE	Mounting Plate Kit	**Magnet Housing Kit
16	8316-9016	8340-1008
25	8525-9030	8525-9009
32	8532-9030	8532-9009
40	8340-9017	8540-9009
50	8350-9016	8550-9009
63	8363-9016	8563-9009

***Magnet Housing Kit is required if actuator was not originally ordered with switches (MXB-P only)

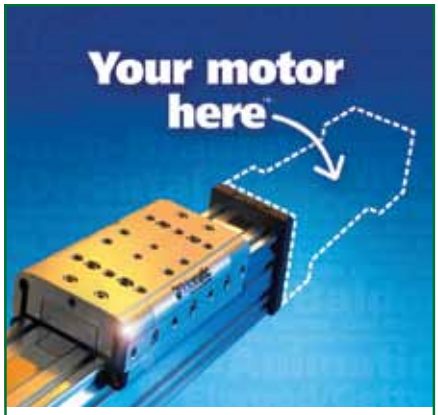

CUSTOM MOTOR MOUNTS. FIVE DAYS. NO CHARGE.

- Select a high-performance Tolomatic electric actuator and we'll provide a motor-specific interface for YOUR motor - at NO EXTRA CHARGE. With our online database, you can select from over 60 motor manufacturers and hundreds of models.

Visit **www.tolomatic.com/ymh** today to find your motor/actuator match!

or

Select a complete system from tolomatic

• Motors • Drives • Controllers • Gearboxes

Tolomatic offers digital servo or stepper drives with motors matched to provide optimal performance with Tolomatic actuators.

CONFIGURE AN ACTUATOR AND A COMPLETE MOTION CONTROL SYSTEM TODAY USING TOLOMATIC'S EASY-TO-USE SIZING & SELECTION SOFTWARE

Availabe FREE at www.tolomatic.com

MXB Belt Driven Actuator

ORDERING

5 DAYS BUILT-TO-ORDER

MODEL SELECTION (MUST BE IN THIS ORDER)

MXB 40 P BWS30 SM2007.02 SDB

OPTIONS (IN ANY ORDER)

DC215.9 MP8 HCP TK2

MODEL

MXB MX Belt Driven Actuator

SERIES

16 Series actuator
25 Series actuator
32 Series actuator
40 Series actuator
50 Series actuator
63 Series actuator

BEARING

U Unguided Carrier
P Profiled Rail

BELT MATERIAL AND WIDTH

BWS10 10 mm Urethane Steel (MXB16)
BWS18 18 mm Urethane Steel (MXB25)
BWS25 25 mm Urethane Steel (MXB32)
BWS30 30 mm Urethane Steel (MXB40)
BWS40 40 mm Urethane Steel (MXB50)
BWS50 50 mm Urethane Steel (MXB63)

STROKE LENGTH & MOUNTING TYPE

SK_ _ _ _._ _ _ Stroke, enter desired stroke length in **inches**

SM_ _ _ _ _._ _ _ Stroke, enter desired stroke length in **millimeters**

GPB Blank Plate (MXB-U only)
NO MOUNTING HOLES allowing user to drill and tap as needed

NOTE: Actuator mounting threads and mounting fasteners will be either inch or metric, depending on how stroke length is indicated

SK=inch mounting

SM= metric mounting

U MOTOR MOUNTING / REDUCTION

(must choose one)

SDL, SDLD* Direct Drive on Left
SDR, SDRD* Direct Drive on Right

⚠ *A motor size and code must be selected when specifying a 3:1 reduction. Reference the motor ordering pages in Electric Products Catalog #3600-4609.*

SDTL, SDTLD* 3:1 Reduction on Top Left
SDTR, SDTRD* 3:1 Reduction on Top Right
SDBL, SDBLD* 3:1 Reduction on Left Bottom
SDBR, SDBRD* 3:1 Reduction on Right Bottom
For Dual Stub Shaft Option

P MOTOR MOUNTING / REDUCTION

(must choose one)

SDT, SDTD* Direct Drive on Top
SDB, SDBD* Direct Drive on Bottom

⚠ *A motor size and code must be selected when specifying a 3:1 reduction. Reference the motor ordering pages in Electric Products Catalog #3600-4609.*

SDLT, SDLTD* 3:1 Reduction on Left Top
SDRT, SDRTD* 3:1 Reduction on Right Top
SDLB, SDLBD* 3:1 Reduction on Left Bottom
SDRB, SDRBD* 3:1 Reduction on Right Bottom
For Dual Stub Shaft Option

AUXILIARY CARRIER

DC_ _ _._ _ _ Auxiliary Carrier, (MXB-P only) enter center-to-center spacing desired in **inches** (SK) or **millimeters** (SM)

(Same unit of measure as stroke length is required)

⚠ **Center-to-center spacing between carriers adds to overall length of the actuator,** this distance will not be subtracted from stroke length specified in the previous step

HEAD COVER PLATES

HCP Head Cover Plates

MOUNTING

MP_ Mounting Plates, & quantity
TC_ Tube Clamps, & quantity

NOTE: The MXB requires Mounting Plates to allow clearance for motor when mounted flush to surface.

16,25,32 *sizes use T-Nuts with Mounting Plates.*

40,50,63 *sizes use Tube Clamps with Mounting Plates.*

MOTOR / DRIVE / CONTROLLER / PLANETARY GEARBOX

⚠ *Reference the ordering pages in Electric Products Catalog #3600-4609 Stepper Products Brochure #3600-4160 & Planetary Gearbox Doc. #3600-4161*

SWITCHES *("P" bearing only)*

TYPE	LOGIC	NORMALLY	QUICK-DISCONNECT	CODE	QUANTITY	LEAD LENGTH
REED	SPST	Open	no	RY	After code enter quantity desired	5 meters (16.4 feet)
			QD	RK		
		Closed	no	NY		
			QD	NK		
SOLID STATE	PNP	Open	no	TY		
			QD	TK		
	NPN	Open	no	KY		
			QD	KK		
	PNP	Closed	no	PY		
			QD	PK		
	NPN	Closed	no	HY		
			QD	HK		

VISIT www.tolomatic.com/mxb FOR COMPLETE, UP-TO-DATE INFORMATION

⚠ ***Not all codes listed are compatible with all options.***

Call Tolomatic 1-800-328-2174 to determine available options and accessories based on your application requirements.

THE TOLOMATIC DIFFERENCE What you expect from the industry leader:

EXCELLENT CUSTOMER SERVICE & TECHNICAL SUPPORT

Our people make the difference! Expect prompt, courteous replies to all of your application and product questions.

INDUSTRY LEADING DELIVERIES

Standard catalog products are built to order and ready-to-ship in 5 days or less. Modified and custom products ship weeks ahead of the competition.

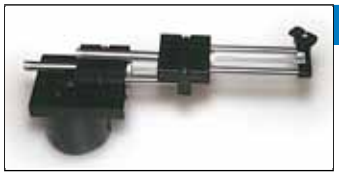

INNOVATIVE PRODUCTS

From standard catalog products... to modified products... to completely unique custom products, Tolomatic designs and builds the best solutions for your challenging applications.

SIZING & SELECTION SOFTWARE

Windows® compatible, downloadable from our website – FREE – the best tool of its kind on the market! Product selection has never been easier.

3D MODELS & 2D DRAWINGS AVAILABLE ON THE WEB

Easy to access CAD files are available in many popular formats.

ALSO CONSIDER THESE OTHER TOLOMATIC PRODUCTS:

PNEUMATIC PRODUCTS

RODLESS CYLINDERS: Band Cylinders, Cable Cylinders, MAGNETICALLY COUPLED CYLINDERS/SLIDES; GUIDED ROD CYLINDER SLIDES; ROTARY ACTUATORS

"FOLDOUT" BROCHURE #9900-9075 PRODUCTS BROCHURE #9900-4028 www.tolomatic.com/pneumatic

ELECTRIC PRODUCTS

ROD & GUIDED ROD STYLE ACTUATORS, HIGH THRUST ACTUATORS, SCREW & BELT DRIVE RODLESS ACTUATORS, MOTORS, AXIOM DRIVES/CONTROLLERS

"FOLDOUT" BROCHURE #9900-9074 PRODUCTS BROCHURE #9900-4016 www.tolomatic.com/electric

POWER TRANSMISSION PRODUCTS

GEARBOXES: Float-A-Shaft®, Slide-Rite®; DISC CONE CLUTCH; CALIPER DISC BRAKE

"FOLDOUT" BROCHURE #9900-9076 PRODUCTS BROCHURE #9900-4029 www.tolomatic.com/pt

Tolomatic
EXCELLENCE *IN MOTION*®

3800 County Road 116 • Hamel, MN 55340 U.S.A.
Phone: (763) 478-8000 • Fax: (763) 478-8080

Toll-Free: 1-800-328-2174
Email: help@tolomatic.com • http://www.tolomatic.com

All brand and product names are trademarks or registered trademarks of their respective owners. Information in this document is believed accurate at time of printing. However, Tolomatic assumes no responsibility for its use or for any errors that may appear in this document. Tolomatic reserves the right to change the design or operation of the equipment described herein and any associated motion products without notice. Information in this document is subject to change without notice.

Visit www.tolomatic.com for the most up-to-date technical information

CERTIFIED QUALITY MANAGEMENT SYSTEM ISO 9001:2000 DNV