KONAN®

CATALOG
No.2309E

URL=https://www.konan-em.com/

LINE COMPONENTS

KONAN ELECTRIC CO.,LTD.

KONAN LINE COMPONENTS

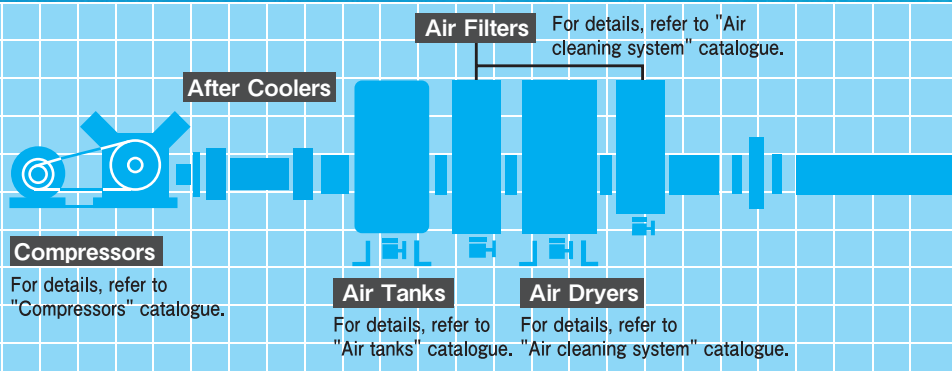

"For both safety and savings..."

"The rising needs for automation and labor saving are satisfied by each member of the lineup, from genersl purpose types,where importance is given to basic performance,to specialized types designed for individual industries and applications"

This booklet shows groups of line controls necessary for adequate operation of solenoid valves,cylinders,etc.
Select the type best suited to your system by carefully examining the specifications.
For those other than contained here, please feel free to contact us.

Air Filters 5
- Standard type ---------- AF2, AF21
- Panel-mounted type ----- AF2P, AF21P

Air Filters with Automatic drain valve 13
- Standard type ------ ADF2, ADF21

Regulators 17
- Standard type ---------- RV2, RV21

External-Pilot Operated Regulators 26
- Standard type ----- PRV11B, PRV2

Precision Regulators 29
- Standard type ---- RV10C, RV6

For 0.02 to 0.2MPa Regulators 34
- -------- RV2-G, RV6-G

Lubricators 51
- Standard type --- OL2,OL21

Forced Micromist Lubricators 58
- Standard type ------ MO2

FRL Units 61
- Standard type ------- LU2, LU21

FR Units 67
- ---------- 820

Reducing valve with filter 73
- Standard type ------ ARU2, ARU3A, FR21
- Instumentation type --- FR5

Electric Regulators 39
- ---------- 380

Volume Boosters 42
- Standard type ---------- VB3
- Instumentation type ----- VB7

5 to 144 Pages expresses the printing page.

Directional Control Valves

Solenoid Valves

For details, refer to separate "Solenoid valves" catalogue.

Four-Port Hand-Operated, Directional Control Valves 80

- Standard type ------- PVT1
  PVT406K
  PVT410K
- With locking mechanism -- PVT1M
- Lower-piping type --- PVT1L
  PVT406L
  PVT410L

Silencers 86

- Resin-made type ------ ES3
- Metal-made type ------ ES4
- With throttle valves ---- EVS4
  EVS5
  EVS6

Exhaust Filters 93

- Standard type ---- KMFC2

Manifold Filters 96

- Standard type -------- MF2

Speed Controllers 98

- Standard type --------- SC6
  SC213
- Fine-tuning type ---- SC6F

Omnidirectional,Screwed Speed Controllers 104

- Standard type -------- SC7

Omnidirectional,One-touch Speed Controllers 107

- M3・M5・Rc1/8・1/4・3/8・1/2

Check Valves 113

- Standard type ---------- CV3

Pilot-Operated Check Valves 116

- Standard type ------- CVP2

Shuttle Valves 118

- Standard type ------- CVT3

Quick-Release Valves 121

- Standard type ------ QEV3

Safety Block Valves 125

- Standard type ------ CVD1

Lockup Valves 127

- Standard type -------- LVS5
  LVD5

Quick cylinder extension preventive valves Slow-Start Valves 130

- Standard type ------- SSV2

Pressure Detecting Valves 133

- Standard type (3Ports) --- PSV5
- Standard type (5Ports) ---- PSV2
- Low pressure purpose (5Ports) ------- PSV3L

One-Touch Couplers Touch Connectors 137

- M5×0.8・Rc1/8・1/4・3/8・1/2

Touch tubes 144

- Φ4・6・8・10・12mm

Actuators

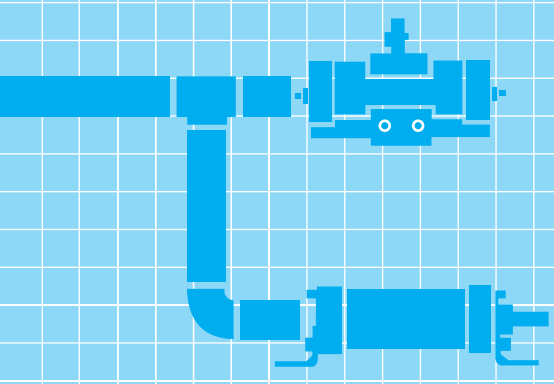

For details, refer to "Pneumatic rotary actuators" catalogue.

For details, refer to "Pneumatic cylinder" catalogue.

I N D E X

	PAGE
Air Filters	5
Air Filters with Autodrain	13
Regulators	17
Regulators with External Pilot	26
Precision Regulators	29
Regulators for 0.02 to 0.2MPa	34
Electric Regulators	39
Volume Boosters	42
Lubricators	51
Forced Spray Micromist Lubricators	58
FRL Units	61
FR Units	67
Reducing valve with filter	73
Four-Port,Hand-Operated Direction Control Valves	80
Silencers	86
Exhaust Filters	93
Manifold Filters	96
Speed Controllers	98
Omnidirectional,Screwed Speed Controllers	104
Omnidirectional,One-touch Speed Controllers	107
Check Valves	113
Pilot-Operated Check Valves	116
Shuttle Valves	118
Quick-Release Valves	121
Safety Block Valves	125
Lockup valves	127
Slow-Start Valves	130
Pressure Detecting Valves	133
One-Touch Couplers Touch Connectors	137
Touch Tubes	144

AIR FILTERS

Drain fluids in the pneumatic lines may increase piping corrosion resistance, and hinder the function of controls in the line, finally lead to accidents. Be sure to use air filters to remove drain fluids from the line and prevent problems.

AF2/AF21	Standard type	RC 1/8 ~ 100A
AF2P/AF21P	Type mounted in the control box	RC 1/4 ~ 1

JIS Symbol

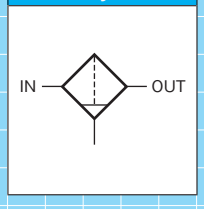

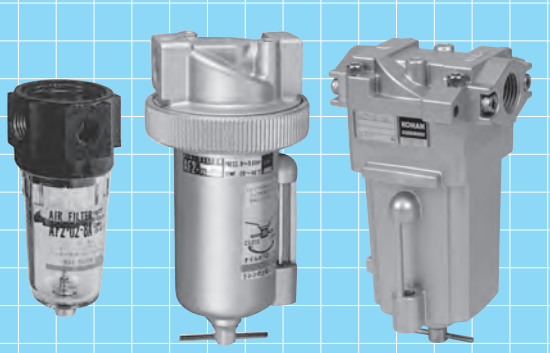

Model Code

When ordering,specify the model as follows:

Standard type

Rc 1/8 ~ 1/4

AF2 –02– [2] – [10]

- [2] Port size
- [10] Bracket

Rc 1/4 ~ 1/2

AF21 [1] –04– [3] – [7] – [8] – [10]

- [1] Corrosion-resistant
- [3] Port size
- [7] Operating temperature range
- [8] Filter rating of element
- [10] Bracket

Rc 3/4 ~ 1

AF2 [1] –08– [4] – [7] – [8]

- [1] Corrosion-resistant
- [4] Port size
- [7] Operating temperature range
- [8] Filter rating of element

Rc 1_1/4 ~ 2

AF2 [1] – [5] – [7] – [8] – [9] – [10]

- [1] Corrosion-resistant
- [5] Port size
- [7] Operating temperature range
- [8] Filter rating of element
- [9] Level gauge
- [10] Bracket

Rc 2_1/2 ~ 100A Flange

AF2 – [6]

- [6] Port size

Type mounted in the control box

Since these models are for panel mounting, drain cock are not installed but a female thread are tapped for piping. Please set up drain valve separately.

Rc 1/4 ~ 1/2

AF21P [1] –04– [3] – [7] – [8] – [10]

- [1] Corrosion-resistant
- [3] Port size
- [7] Operating temperature range
- [8] Filter rating of element
- [10] Bracket

Rc 3/4 ~ 1

AF2P [1] –08– [4] – [7] – [8]

- [1] Corrosion-resistant
- [4] Port size
- [7] Operating temperature range
- [8] Filter rating of element

❶ Corrosion-resistant

- Portions that are exposed to outside weather conditions are corrosion-resistant coating and the exposed bolts,nuts and brackets are stainless steel.

Standard	No entry
Corrosion-resistant type	S

❷ Port size

Rc 1/8	6A
Rc 1/4	8A

❸ Port size

Rc 1/4	8A
Rc 3/8	10A
Rc 1/2	15A

❹ Port size

Rc 3/4	20A
Rc 1	25A

❺ Port size

Rc 1_1/4	32A
Rc 1_1/2	40A
Rc 2	50A

❻ Port size

Rc 2_1/2	65A
80A Flange	80A
100A Flange	100A

❼ Operating temperature range

General purpose	− 20 ~ 60℃	No entry
Heat-resistant	5 ~ 100℃	HT
Freeze-resistant	− 40 ~ 45℃	LT

- For corrosion.freeze resistant type,allow some margin for delivery.
- In operating temperatures of 5℃ or less, provide adequate measures against freezing.
- Please note that no freeze-resistant are manufactured for filters with a Rc2 port size.

❽ Filter rating of element

General purpose	40 μm	No entry
Instrumentation	5 μm	5

- For the miniature type,note that a filter rating of 5 microns only is available.

❾ Level gauge

Without	No entry
Flont side	F
Back side	B

❿ Bracket

Without	No entry
With	BR

- Bracket is not mounted but appended with air filters.

Specifications

Model code	Standard type	AF2-02	
Port size		6A	8A
		Rc1/8	Rc1/4
※1 Effective sectional area		7㎟ Filter rating=5μm	
Operating pressure		0 ～ 1MPa	
Proof pressure		1.5MPa	
Operating temperature		− 20 ～ 60℃	
Mass		0.19kg	

Model code	Standard type	AF21-04			AF2-08		AF2					
	In the control box	AF21P-04			AF2P-08							
Port size		8A	10A	15A	20A	25A	32A	40A	50A	65A	80A Flange	100A Flange
		Rc1/4	Rc3/8	Rc1/2	Rc3/4	Rc1	Rc1 1/4	Rc1 1/2	Rc2	Rc2 1/2		
※1 Effective sectional area	General purpose	40㎟	68㎟	90㎟	171㎟	190㎟	480㎟	655㎟	1060㎟	1450㎟	1800㎟	2500㎟
	Instrumentation	28㎟	30㎟	40㎟	76㎟	77㎟	190㎟	190㎟	300㎟	—	—	—
Operating pressure		0 ～ 1.0MPa										
Proof pressure		1.5MPa										
Operating temperature		See Model Code section.					− 20 ～ 60℃					
Mass		0.58kg		0.62kg	0.6kg		12.0kg		22.0kg	28.0kg	39.0kg	50.0kg

- Above values of mass exclude weight of mounting bracket.
- For specifications other than those listed above,please contact us.

※ 1.Effective area shown when : inlet pressure 0.5MPa pressure drop（△P）0.05MPa

Operation

Standard type

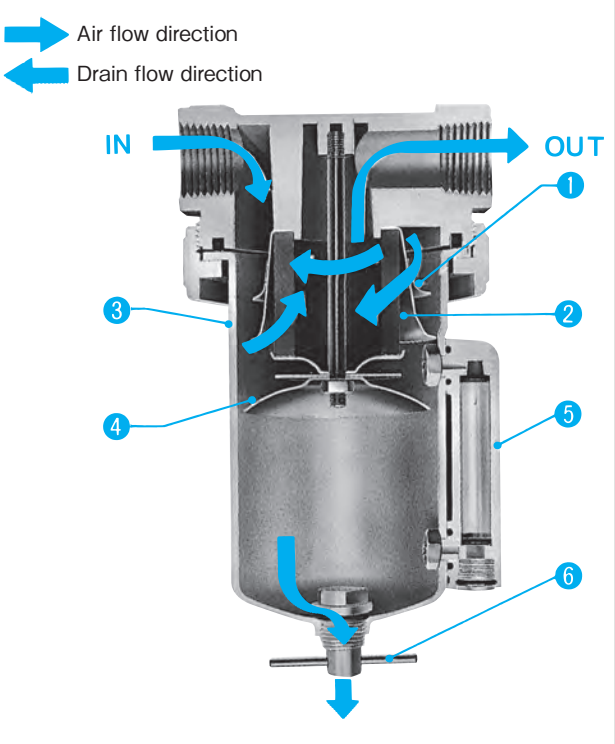

❶ Deflector

Changes air under pressure from IN port into a rotating flow and separates moisture from the air centrifugally.

❷ Filter element

Filters out lightweight dirt,foreign matter,etc. that cannot be separated from the air centrifugally.

❸ Bowl

Drain separated centrifugally runs down the inner wall of the bowl and collects at the bottom.

❹ Baffle plate

Prevents drain at the bottom of the bowl's from mixing with the air again.

❺ Side glass

Used to see how much drain has collected.

❻ Drain cock

Turning the handle counterclockwise allows drain to be discharged.

Outside Dimensions

Standard type

AF2-02-6A・8A

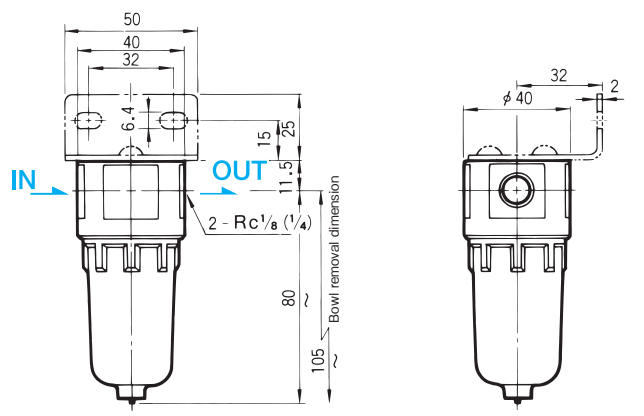

AF21-04-8A・10A・15A

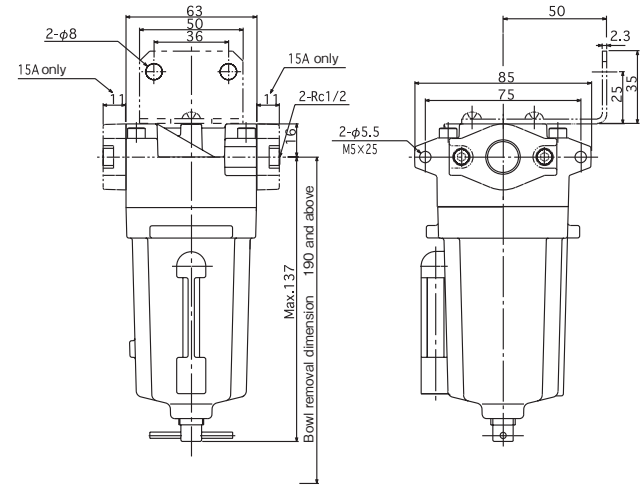

AF2-08-20A・25A

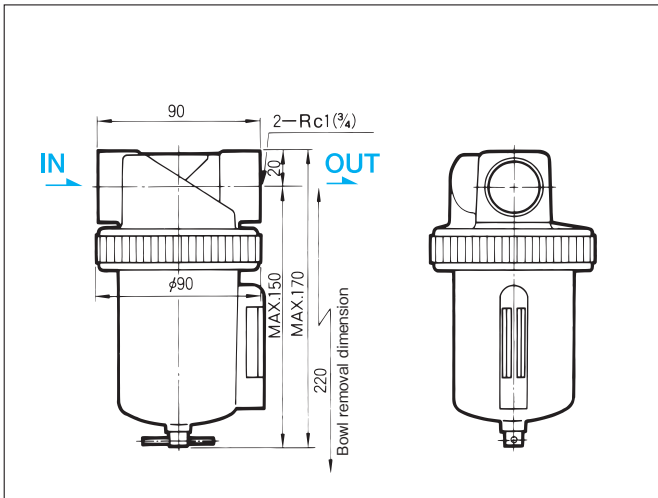

Type mounted in the control box

AF21P-04-8A・10A・15A

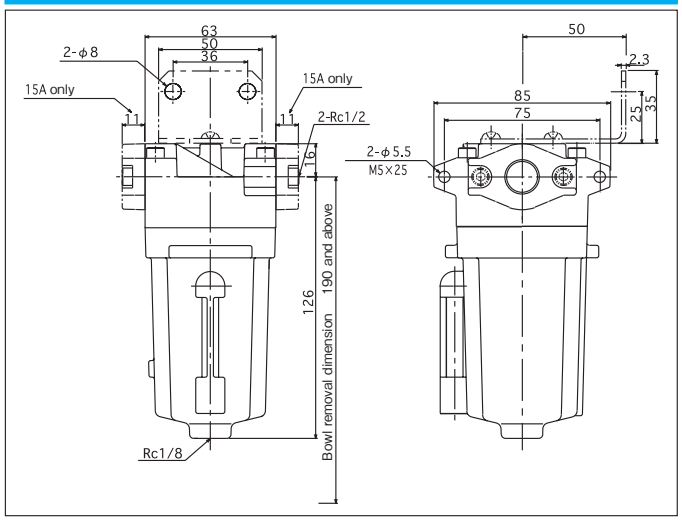

AF2P-08-20A・25A

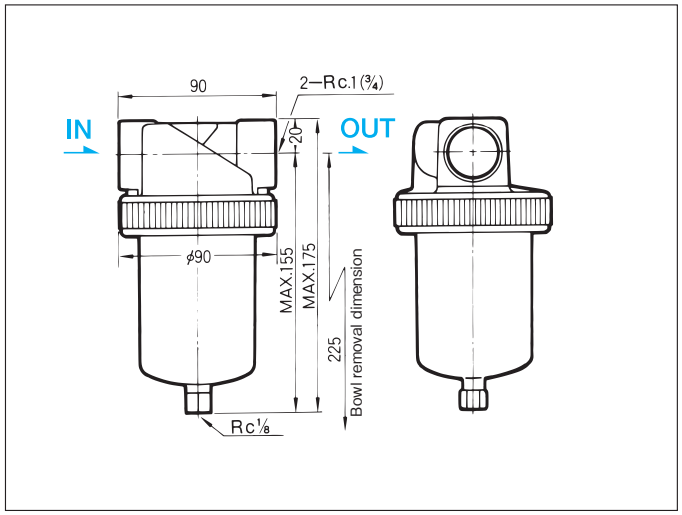

Outside Dimensions

Standard type

AF2-32A・40A

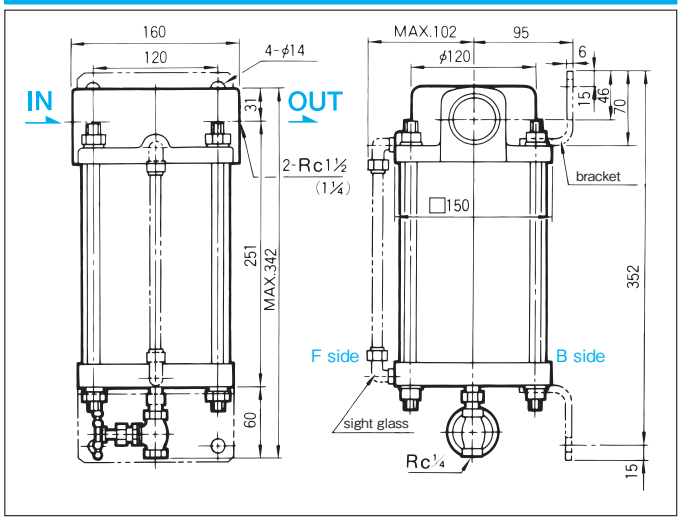

AF2-80A

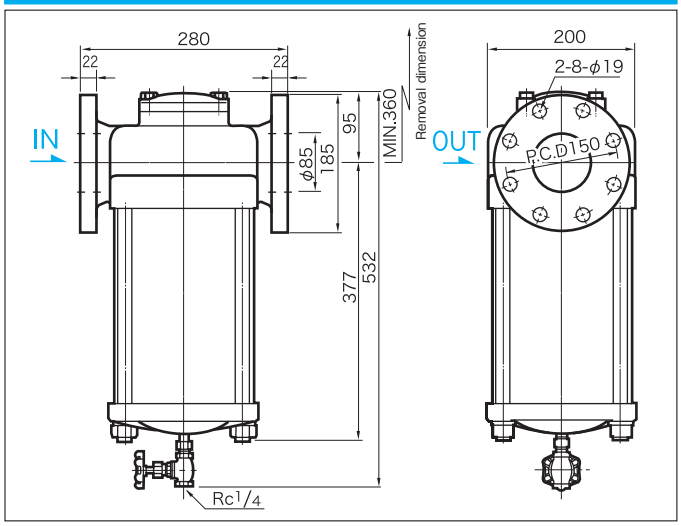

AF2-50A

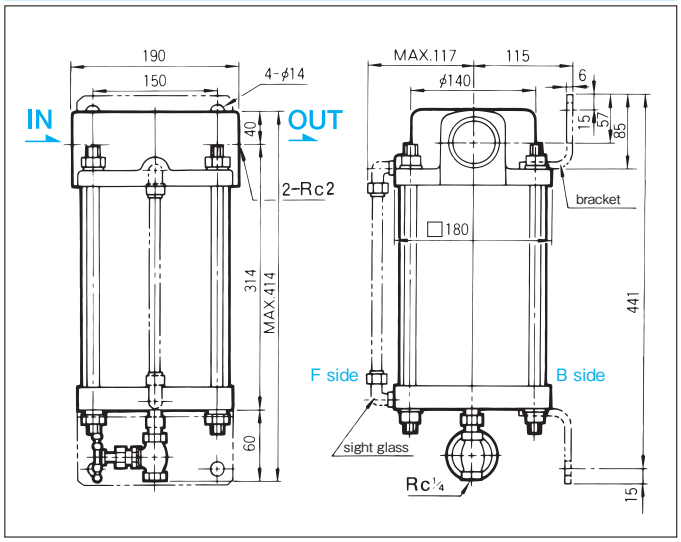

AF2-100A

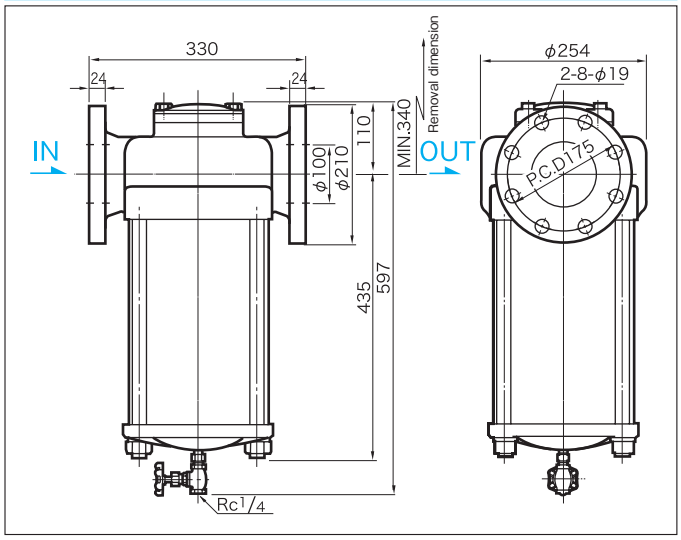

AF2-65A

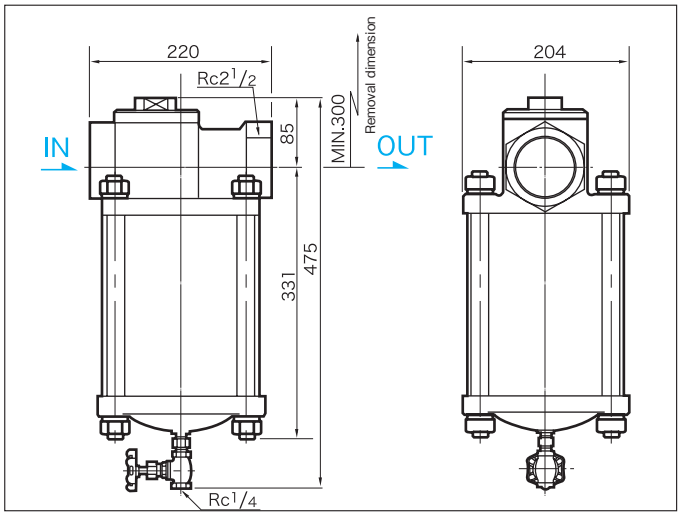

Performance Tables

Flow characteristics graphs (filter grade=40 μm)

Standard and Panel-mount type

AF21-04-8A

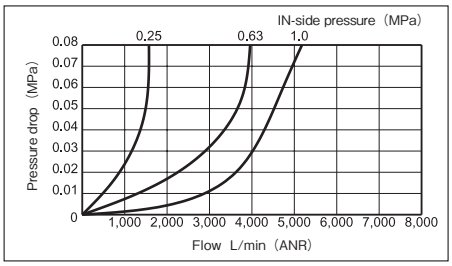

AF2-08-20A

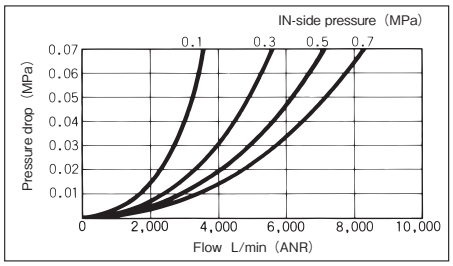

AF2-32A

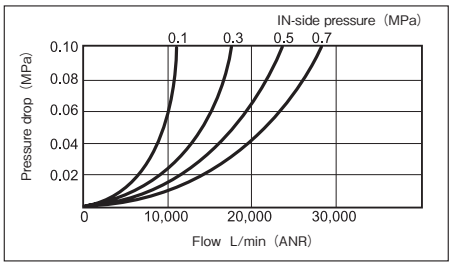

AF21-04-10A

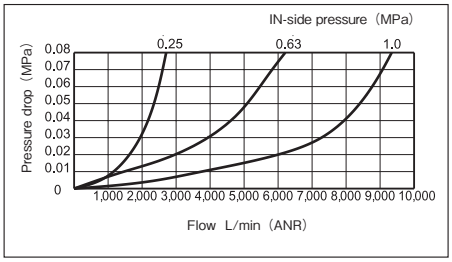

AF2-08-25A

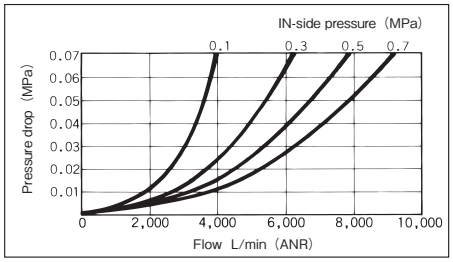

AF2-40A

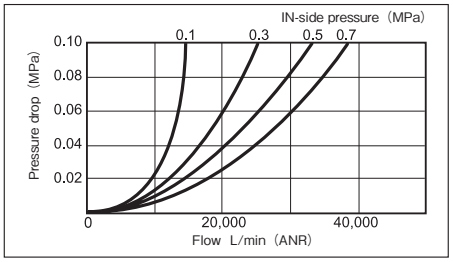

AF21-04-15A

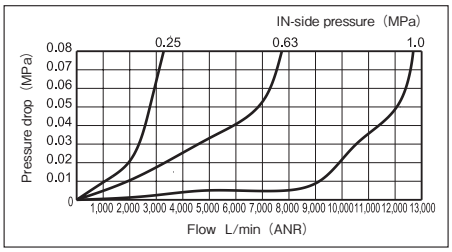

AF2-50A

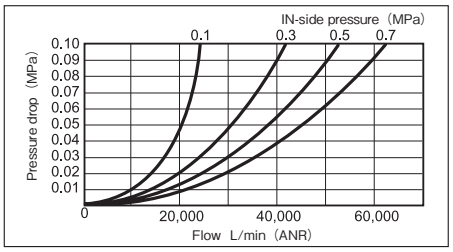

AF2-65A

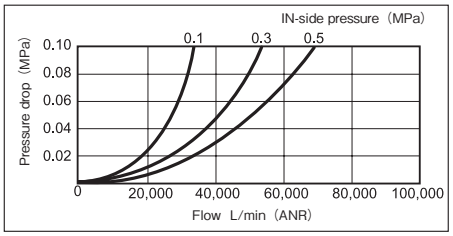

AF2-80A

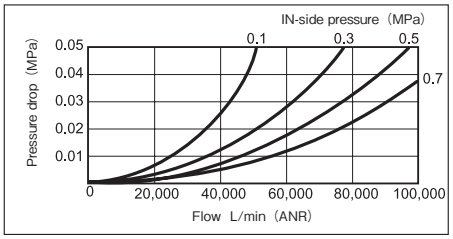

AF2-100A

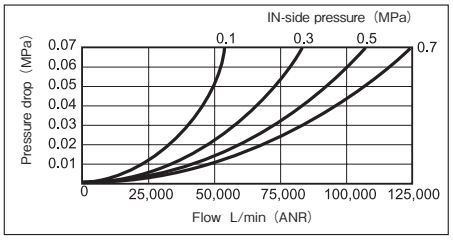

Performance Tables

Flow characteristics graphs (filter rating=5μm)

Standard and Panel-mount type

AF2-02-6A-8A

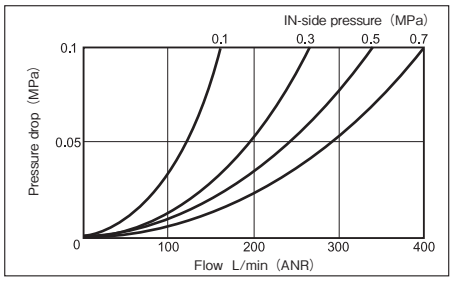

AF21-04-8A

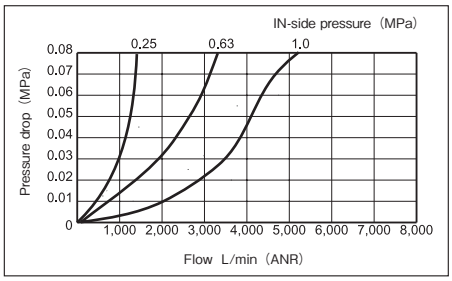

AF2-08-20A

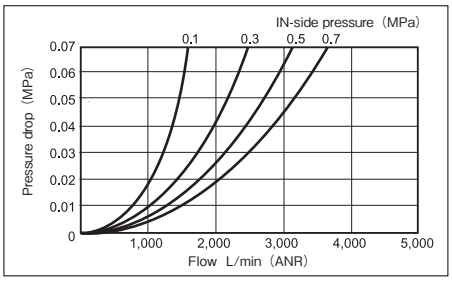

AF21-04-10A

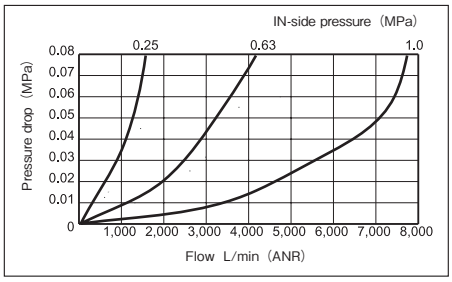

AF2-08-25A

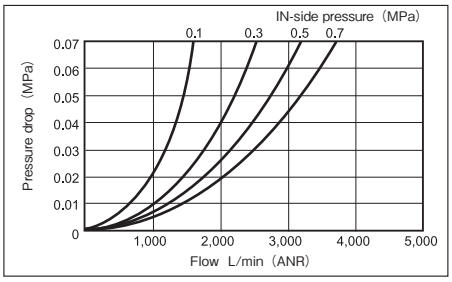

AF21-04-15A

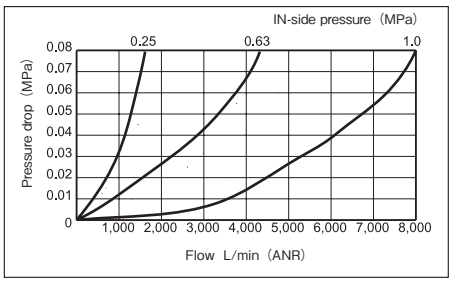

Performance Tables

Flow characteristics graphs (filter rating=5μm)

AF2-32A

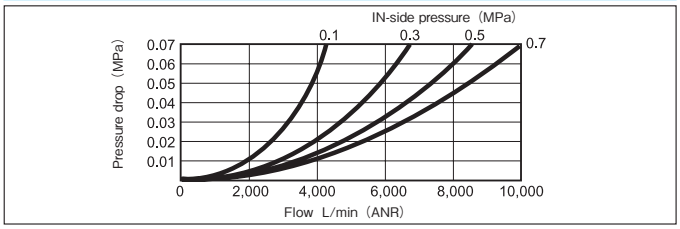

AF2-40A

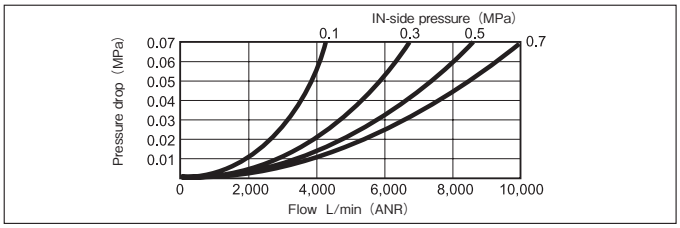

AF2-50A

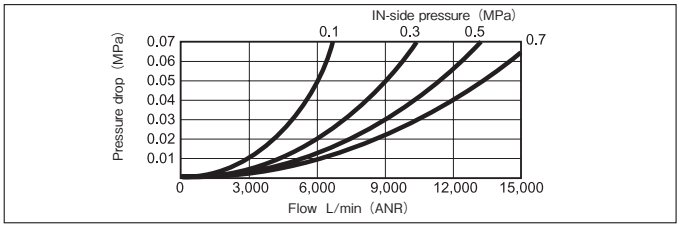

Operating Instructions

1 Discharging drain fluid

AF2 – 02

- Push up the push rod of the drain valve.

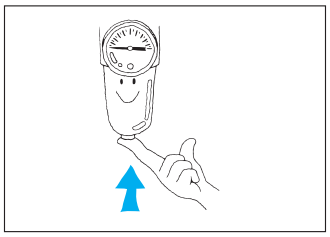

Standard / Corrosion-resistant type

- Turn the handle of the drain cock counterclockwise ; the pressure in the bowl will cause the drain to be discharged.

Type mounted in the control box

- A Rc1/8 thread is machined in the body. Connect the drain discharge pipe or tube to this thread.

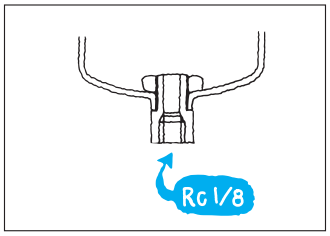

Rc1_1/4 and above type

- Open the stop valve ; the pressure in the bowl will cause the drain to be discharged.

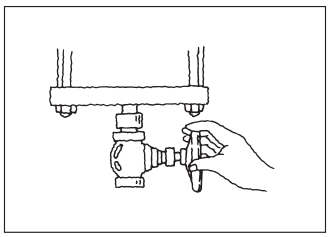

2 Installation

- Install the air filter as far as possible from the air source.
- Leave room so that the bowl can be removed and the filter.

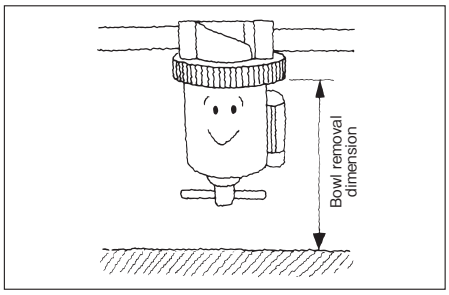

- Install the air filter and lay the pipe so that the drain port is located at dead bottom.

AIR FILTERS
with Autodrain

ADF2/ADF21	Standard type	RC 1/4 ~ 2

An automatic drain has been fitted to the air filters. This separates and removes drain from the pneumatic line,thus preventing trouble.

JIS Symbol

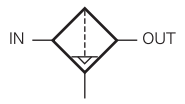

Model Code

When ordering,specify the model as follows:

Standard type

Rc 1/4 ~ 1/2	ADF21 ❶ –04– ❷ – ❺ – ❻
Rc 3/4 ~ 1	ADF2 ❶ –08– ❸ – ❺
Rc 1_1/4 ~ 2	ADF2 ❶ – ❹ – ❺ – ❻

❶ Corrosion-resistant
❷ Port size
❺ Filter rating of element
❻ Bracket

❶ Corrosion-resistant

- Portions that are exposed to outside weather conditions are corrosion-resistant coating and the exposed bolts,nuts and brackets are stainless steel.

Standard	No entry
Corrosion-resistant type	S

❷ Port size

Rc 1/4	8A
Rc 3/8	10A
Rc 1/2	15A

❸ Port size

Rc 3/4	20A
Rc 1	25A

❹ Port size

Rc 1_1/4	32A
Rc 1_1/2	40A
Rc 2	50A

❺ Filter rating of element

General purpose	40 μm	No entry
Instrumentation	5 μm	5

❻ Bracket

Without	No entry
With	BR

- Bracket is not mounted but appended with air filters.

Specifications

Model code		ADF21-04			ADF2-08		ADF2		
Port size		8A	10A	15A	20A	25A	32A	40A	50A
		Rc1/4	Rc3/8	Rc1/2	Rc3/4	Rc1	Rc1 1/4	Rc1 1/2	Rc2
Effective sectional area	General purpose	40㎟	68㎟	90㎟	171㎟	190㎟	480㎟	655㎟	1060㎟
	Instrumentation	28㎟	30㎟	40㎟	76㎟	77㎟	190㎟		300㎟
Operating pressure		0 ~ 1.0MPa							
Proof pressure		1.5MPa							
Operating temperature		− 20 ~ 60℃ (For use below 5℃ ,provide adequate measures against freezing.)							
Mass		0.86kg		0.9kg	0.88kg		14.8kg		24.8kg

- Above values of mass exclude weight of mounting bracket.
- For specifications other than those listed above,please contact us.

Operation

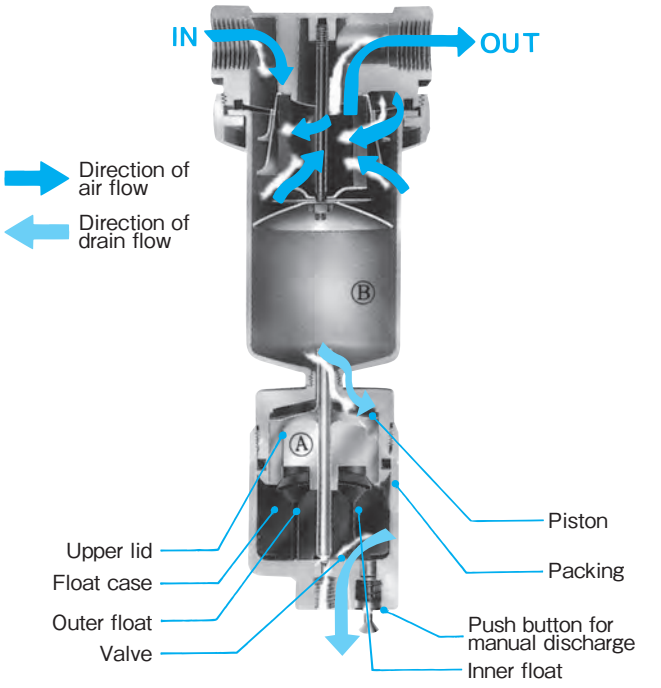

1. If sufficient drain fluid,separated out by the filter,collects in the float case,the inner and outer floats rise under the buoyancy of the drain.
2. The inner float pushes up the piston while the outer float presses the outer ring of the piston and the seal on the lower part of the upper lid.Thus,air flow between chambers A and B is shut off.
3. As air is consumed in this condition,a pressure differential occurs between chambers A and B.If the differential rises above 10% ,the piston rises further,and the bottom valve is opened,allowing drain fluid to discharge.After drainage,the pressures in chambers A and B equalizes,and the piston descends,closing the bottom valve.
4. Therefore,if air is consumed intermittently under the control of a solenoid valve,the air filter works well.
   Below an operating air pressure of 0.05MPa the upward forces from the buoyancy of both floats automatically causes the piston to rise,the bottom valve to open,and the drain to be discharged,whether or not there is a pressure difference present between the chambers.Pressing the pushbutton for manual discharge opens the bottom valve and causes the drain to be discharged,regardless of the operating air pressure.

Outside Dimensions

ADF21-04-8A・10A・15A

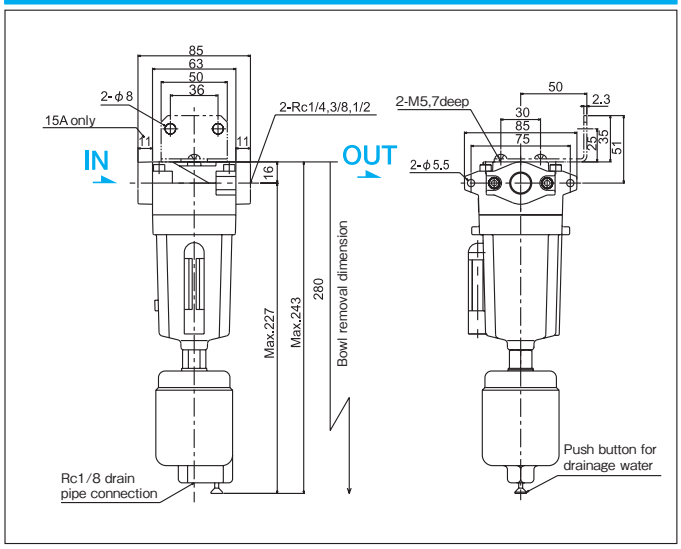

ADF2-08-20A・25A

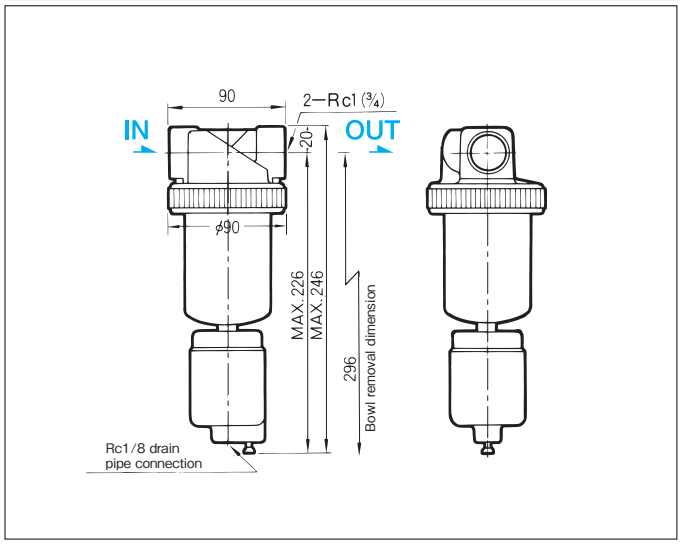

Outside Dimensions

ADF2-32A・40A

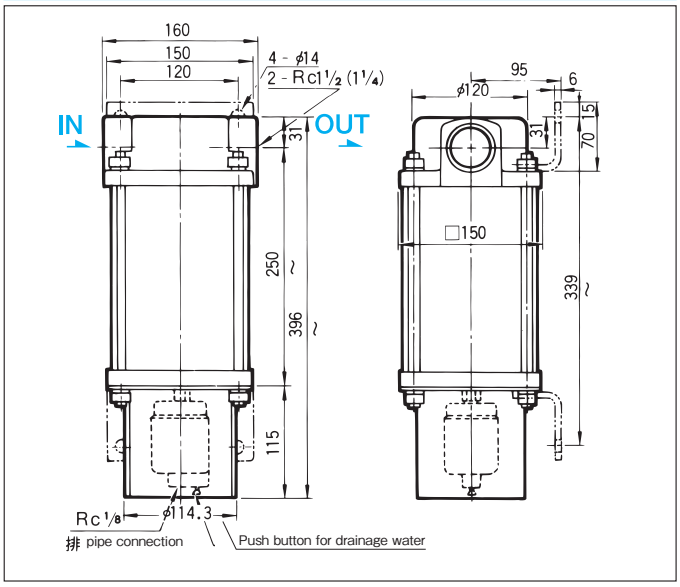

ADF2-50A

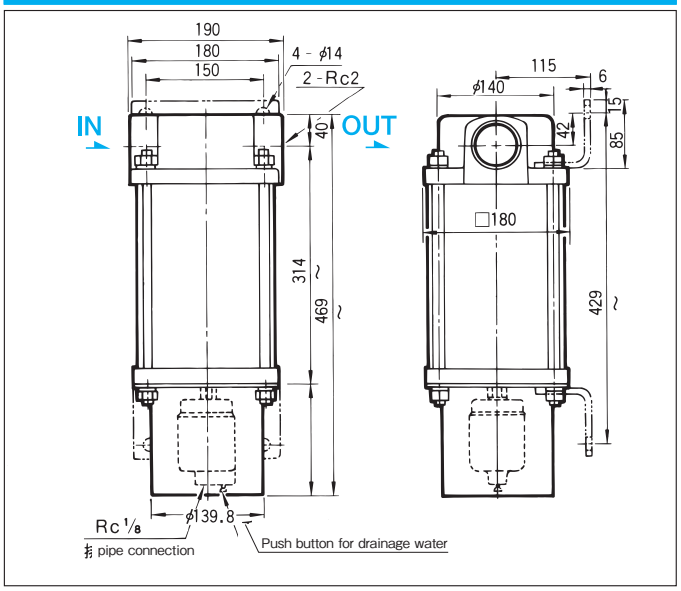

Operating Instructions

1 Installation

● Installation point

Install as far as possible from the air source and free risk of impact.

● Bowl removal dimension

①Leave room so that the bowl can be removed and the filter element checked.

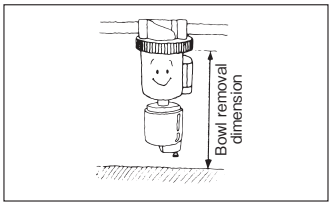

② Install the air filter and piping so that the drain port is located at dead bottom.

2 Discharging drain fluid

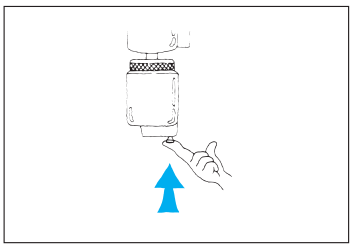

● Drainage conditions

① When the pressure in the bowl falls 10% or more below the air supply pressure from the operation,of peripheral devices.

② When the air supply pressure is 0.05MPa and below.

③ When the pushbutton for manual discharge is pressed.

REGULATORS

RV2/RV21	Standard type	RC 1/8 ~ 2 1/2
RV2P/RV21P	Panel-mount type	RC 1/4 ~ 1/2

Regulators are used to reduce the pressure of the compressed air from the compressor so that air is automatically fed at constant pressure to the pneumatic line.

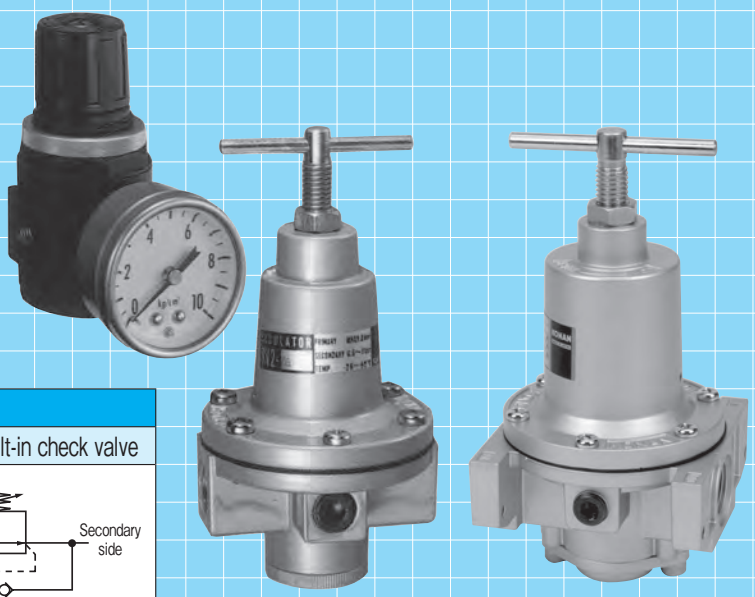

JIS Symbol		
Rc1/8 ~ 1	Rc1_1/4 ~ 2_1/2	Type with built-in check valve
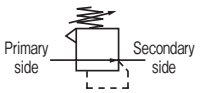	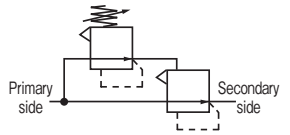	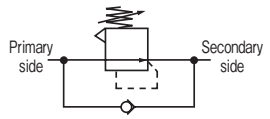

Model Code

When ordering,specify the model as follows:

Standard type

Rc 1/8 ~ 1/4

RV2 – 02 – 3 – 10 – 11

- 3: Port size
- 10: Pressure gauge
- 11: Bracket

Rc 1/4 ~ 3/8

RV 1 2 2 – 03 – 4 – 9 – 10 – 11

- 1: Built-in check valve
- 2: Corrosion-resistant
- 4: Port size
- 9: Operating temperature range
- 10: Pressure gauge
- 11: Bracket

Rc 3/8 ~ 1/2

RV 1 21 2 – 04 – 5 – 9 – 10 – 11

- 1: Built-in check valve
- 2: Corrosion-resistant
- 5: Port size
- 9: Operating temperature range
- 10: Pressure gauge
- 11: Bracket

Rc 3/4 ~ 1

RV 1 2 2 – 08 – 6 – 9 – 10 – 11

- 1: Built-in check valve
- 2: Corrosion-resistant
- 6: Port size
- 9: Operating temperature range
- 10: Pressure gauge
- 11: Bracket

Rc 1_1/4 ~ 1_1/2

RV2 2 – 14 – 7 – 10

- 2: Corrosion-resistant
- 7: Port size
- 10: Pressure gauge

Rc 2 ~ 2_1/2

RV2 2 – 20 – 8 – 10

- 2: Corrosion-resistant
- 8: Port size
- 10: Pressure gauge

Panel-mount type

Rc 1/4 ~ 3/8

RV 1 2P 2 – 03 – 4 – 9 – 10

- 1: Built-in check valve
- 2: Corrosion-resistant
- 4: Port size
- 9: Operating temperature range
- 10: pressure gauge

Rc 3/8 ~ 1/2

RV 1 21P 2 – 04 – 5 – 9 – 10

- 1: Built-in check valve
- 2: Corrosion-resistant
- 5: Port size
- 9: Operating temperature range
- 10: pressure gauge

❶ Built-in check valve

Without	No entry
With	C

❷ Corrosion-resistant

- Portions that are exposed to outside weather conditions are corrosion-resistant coating and the exposed bolts,nuts and brackets are stainless steel.

Standard	No entry
Corrosion-resistant type	S

❸ Port size

Rc 1/8	6A
Rc 1/4	8A

❹ Port size

Rc 1/4	8A
Rc 3/8	10A

❺ Port size

Rc 3/8	10A
Rc 1/2	15A

❻ Port size

Rc 3/4	20A
Rc 1	25A

❼ Port size

Rc 1_1/4	32A
Rc 1_1/2	40A

❽ Port size

Rc 2	50A
Rc 2_1/2	65A

❾ Operating temperature range

General purpose	− 20 ~ 60℃	No entry
Heat-resistant	5 ~ 100℃	HT
Freeze-resistant	− 40 ~ 45℃	LT

- For heat, freeze resistant type, allow some margin for delivery.
- In operating temperatures of 5℃ or less, provide adequate measures against freezing.

❿ Pressure gauge

Without	No entry
With	G

- Pressure gauge sizes :
  40mm dia. (for RV2-02)
  50mm dia. (Others)
  Scale : 0 ~ 1MPa
- Pressure gauge is not mounted but appended with regulators.

⓫ Bracket

Without	No entry
With	BR

- Bracket is not mounted but appended with regulators.

Specifications

Model code	Standard type	RV2-02		RV2-03		RV21-04		RV2-08		RV2-14		RV2-20	
	Panel-mount type			RV2P-03		RV21P-04							
Port size		6A	8A	8A	10A	10A	15A	20A	25A	32A	40A	50A	65A
		Rc1/8	Rc1/4	Rc1/4	Rc3/8	Rc3/8	Rc1/2	Rc3/4	Rc 1	Rc11/4	Rc11/2	Rc2	Rc2 1/2
Operating pressure	Primary side (IN)	Max.1.0MPa											
	Secondary side (OUT)	0.05 ～ 0.7MPa											
Proof pressure		1.5MPa (primary side only)											
Operating temperature		− 20 ～ 60℃		See Model Code section.						− 20 ～ 60℃			
Mass		0.25kg		0.58kg		0.84kg		2.5kg		5.1kg		5.2kg	

- Above values of mass exclude weight of mounting bracket.
- For specifications other than those listed above,please contact us.

Operation

Standard type

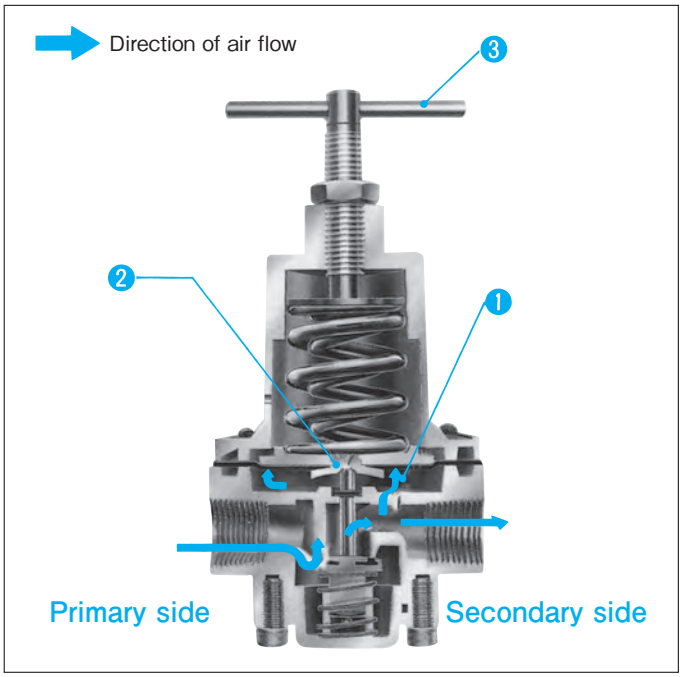

❶ Diaphragm chamber

- Air pressure enters the diaphragm chamber as it passes from the prirnary to the secondary side.The diaphragm is raised until the pressure in the chamber is equal to the force of the spring.The valve is then closed.
- If the pressure on the secondary side drops,the valve is opened,and air is fed from the primary to the secondary side.

❷ Relief valve

- When the handle is turned counterclockwise to lower the pressure setting,the spring becomes weaker than the pressure in the diaphragm.thus,the diaphragm is raised,the relief valve opened,and the air in the secondary side released to the atmosphere until the pressure is equal to the force of the spring.

❸ Handle (adjusting screw)

- To lower the pressure setting,turn the handle counterclockwise.
- As the handle is turned clockwise,the tip of the adjusting screw forces dowa the spring retainer,compressing the spring. The valve is opened,and air is fed from the primary to the secondary side.

Outside Dimensions

Standard type

RV2-02-6A・8A

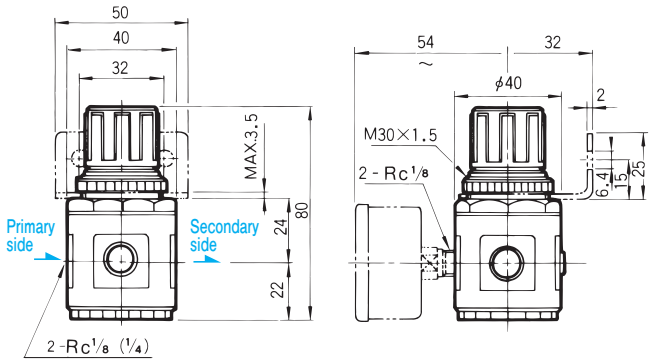

RV2-03-8A・10A

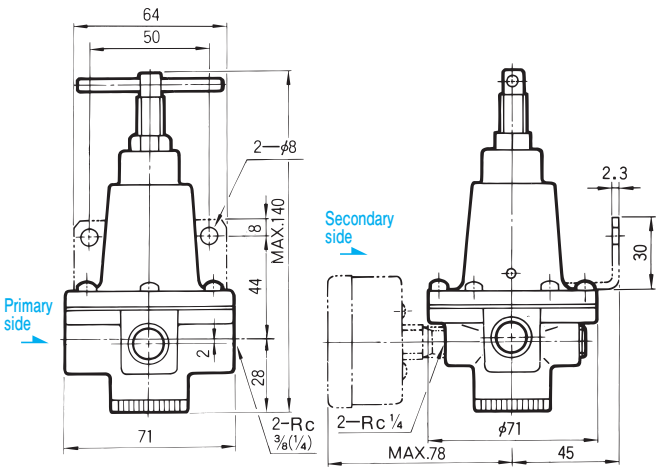

RV21-04-10A・15A

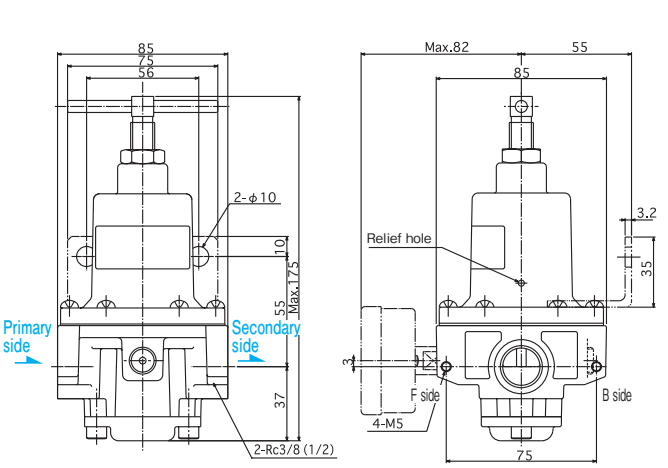

Panel-mount type

RV2P-03-8A・10A

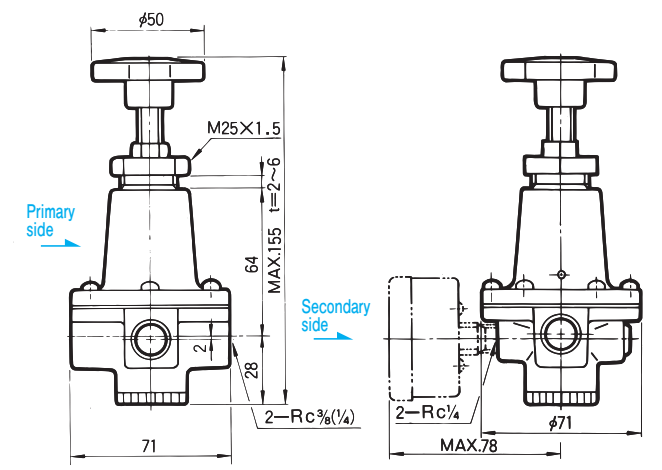

RV21P-04-10A・15A

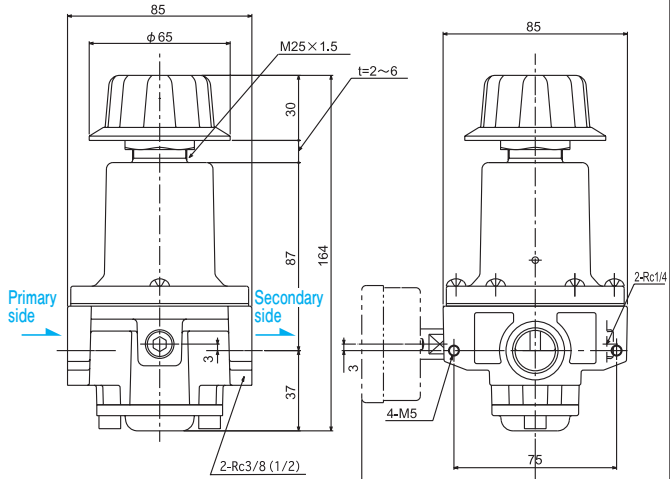

Outside Dimensions

Standard type

RV2-08-20A・25A

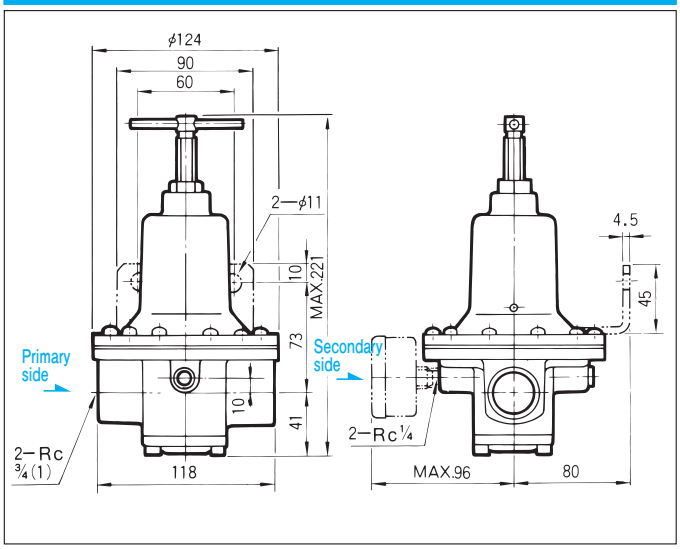

RV2-14-32A・40A

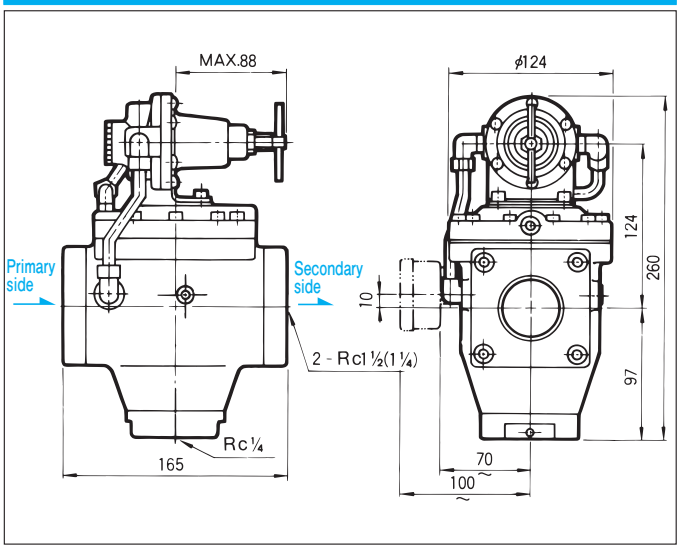

RV2-20-50A・65A

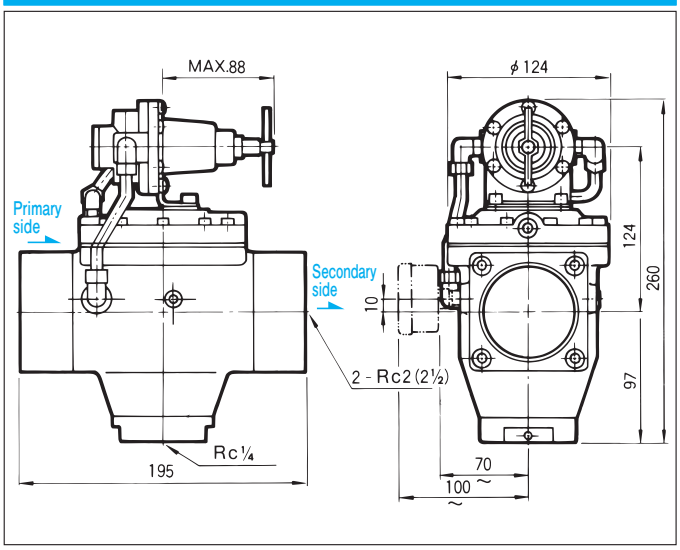

Performance Tables

Pressure characteristics graphs

Standard and Panel-mount type

RV2-02-6A・8A

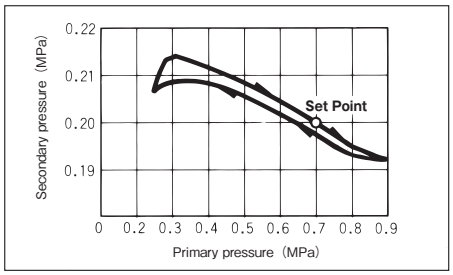

RV2-08-20A

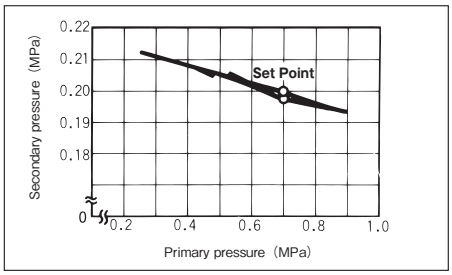

RV2-14-32A

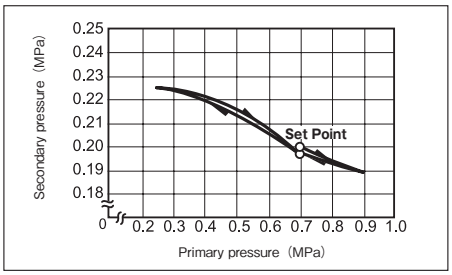

RV2-03-8A

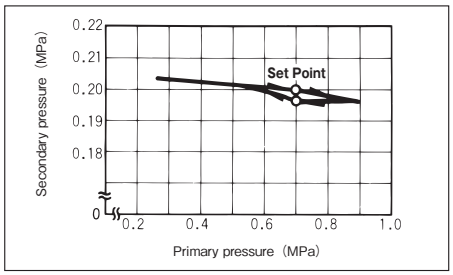

RV2-08-25A

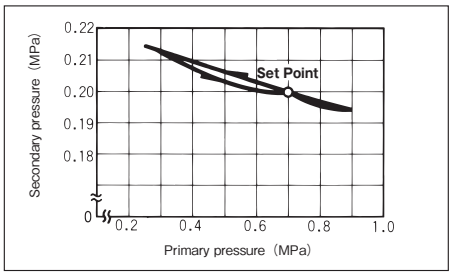

RV2-14-40A

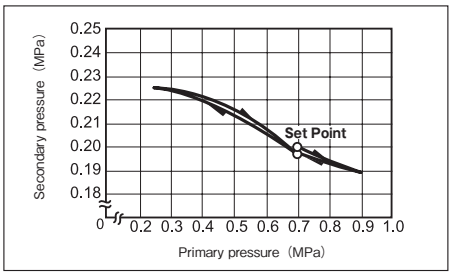

RV2-03-10A

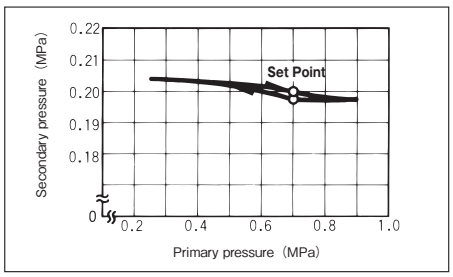

RV2-20-50A

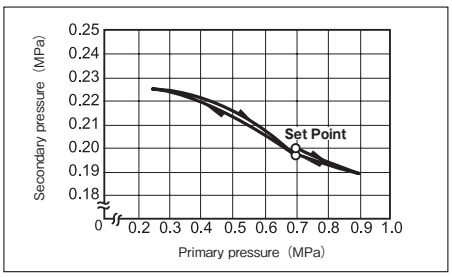

RV21-04-10A

※ This characteristics are based on the new JIS standard.

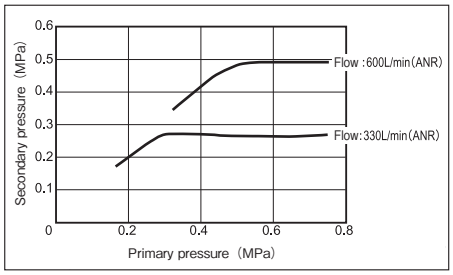

RV2-20-65A

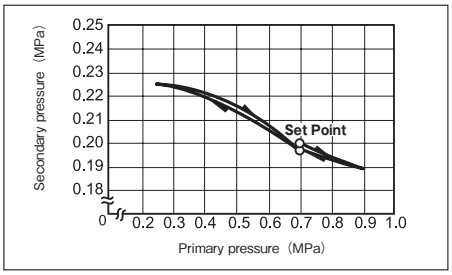

RV21-04-15A

※ This characteristics are based on the new JIS standard.

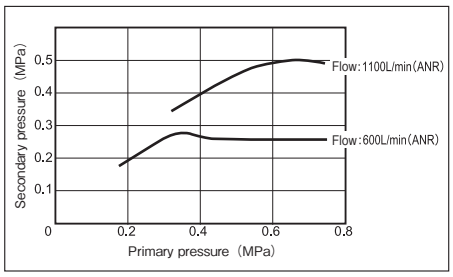

Performance Tables

Flow characteristics graphs

Standard and Panel-mount type

RV2-02

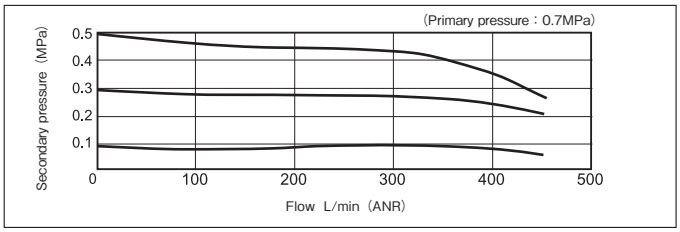

RV2-14

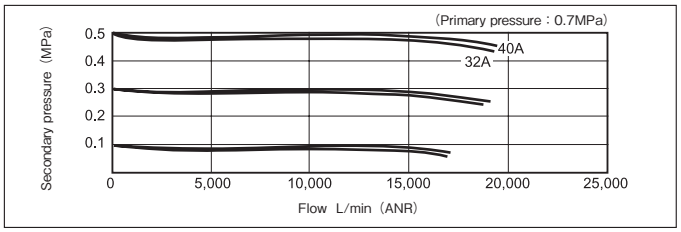

RV2-03

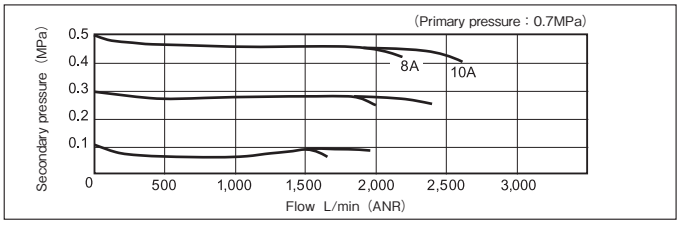

RV2-20

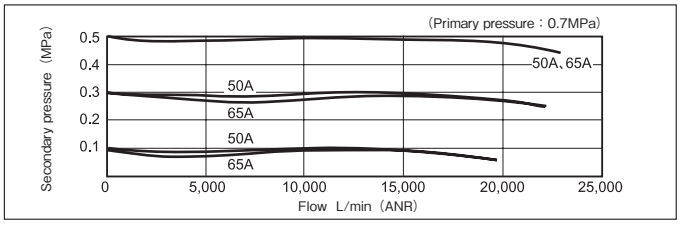

RV21-04-10A

※ This characteristics are based on the new JIS standard.

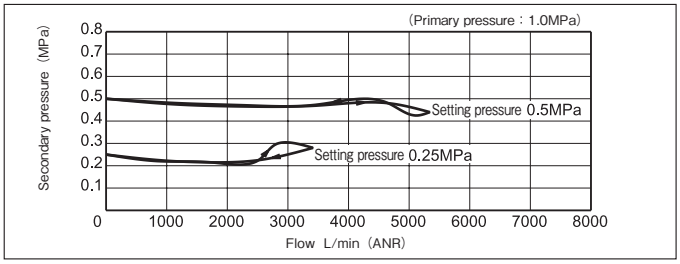

RV21-04-15A

※ This characteristics are based on the new JIS standard.

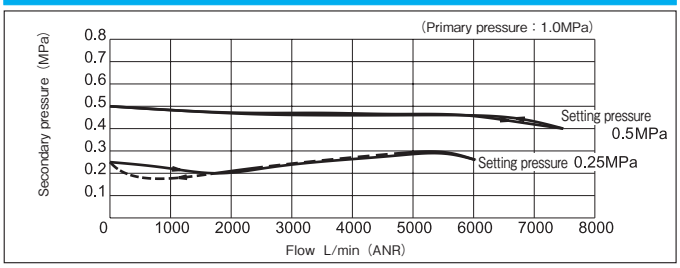

RV2-08

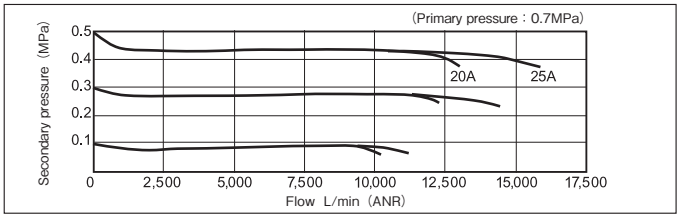

Relief flow characteristics graphs

Standard and Panel-mount type

RV21-04-10A

※ This characteristics are based on the new JIS standard.

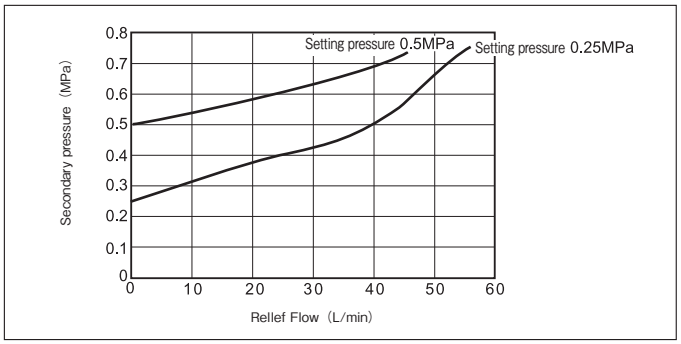

RV21-04-15A

※ This characteristics are based on the new JIS standard.

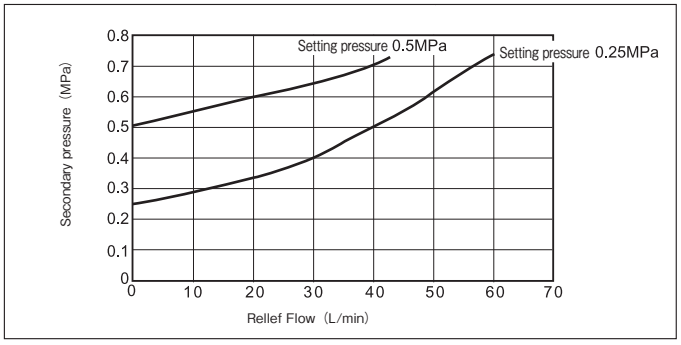

Operating Instructions

1 Installation

- For a circuit in which the flow of air is reversed,running from the secondary to the primary side,use the type with a built-in check valve (RVC2) or install a check valve in parallel,as shown.

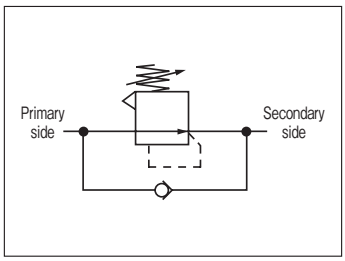

2 Fluid

- Use the regulator with clean fluids only.Dirt,wastes,etc.in the fluid may cause regulator malfunction.

3 Lubrication

- As a general rule,do not attempt to lubricate the regulator. When disassembling for checking,however,apply grease.

4 Bracket

- The regulator mounting bracket is available as an option. For the mounting of the bracket,see the figure below.

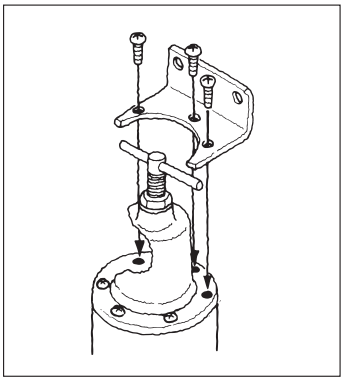

- Remove any three machine screws from the upper part of the regulator.Attach the bracket to the regulator using the longer machine screws supplied with the bracket.
- For the miniature type,hold the bracket in place using lock screws.

5 Pressure

- To lower the pressure setting,lower the present setting below the target point first and then increase the setting to the target point.
- After setting,be sure to tighten the locknut.

REGULATORS
with External Pilot

PRV11B	Standard type	RC 3/4 · 1 1/2

Pressure is controlled by external signal pressure (pilot pressure) instead of by spring force.
Performance,etc.is exactly the same as the spring-controlled regulators

JIS Symbol

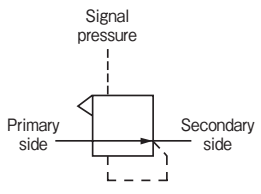

Model Code

When ordering,specify the model as follows:

Standard type

Rc 3/4 ~ 1

PRV11B – ① – ③ – ④

- ① Port size
- ③ Pressure gauge
- ④ Bracket

Rc 1_1/4 ~ 1_1/2

PRV2-14 – ② – ③

- ② Port size
- ③ Pressure gauge

① Port size

Rc 3/4	20A
Rc 1	25A

② Port size

Rc 1 1/4	32A
Rc 1 1/2	40A

③ Pressure gauge

Without	No entry
With	G

- Pressure gauge sizes : 50mm dia.
  Scale : 0 ~ 1MPa
- Pressure gauge is not mounted but appended with regulators.

④ Bracket

Without	No entry
With	BR

- Bracket is not mounted but appended with regulators.

Specifications

Model code		PRV11B		PRV2-14	
Port size		20A	25A	32A	40A
		Rc3/4	Rc1	Rc1 1/4	Rc1 1/2
Operating pressure	Primary side (IN)	Max.1.0MPa			
	Secondary side (OUT)	0.05 ~ 0.7MPa			
Proof pressure		1.5MPa (Primary side only)			
Operating temperature		− 20 ~ 60℃			
Mass		2.5kg		5.1kg	

- Above values of mass exclude weight of mounting bracket.

Outside Dimensions

PRV11B-20A・25A

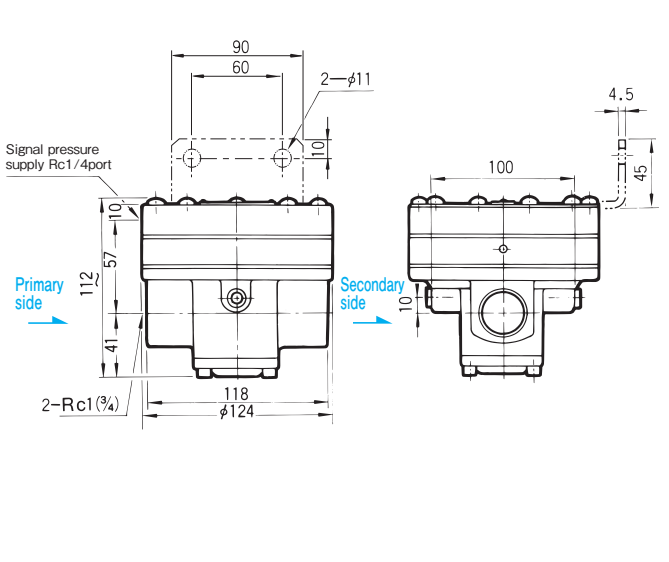

PRV2-14-32A・40A

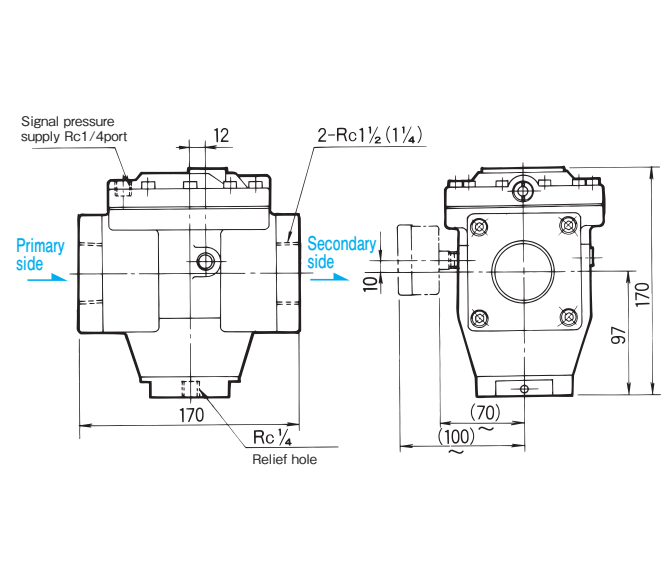

Performance Tables

Pressure characteristics graphs

PRV11B-20A

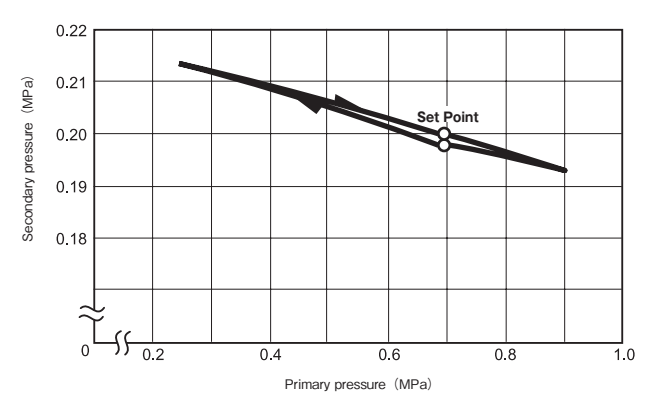

PRV2-14-32A

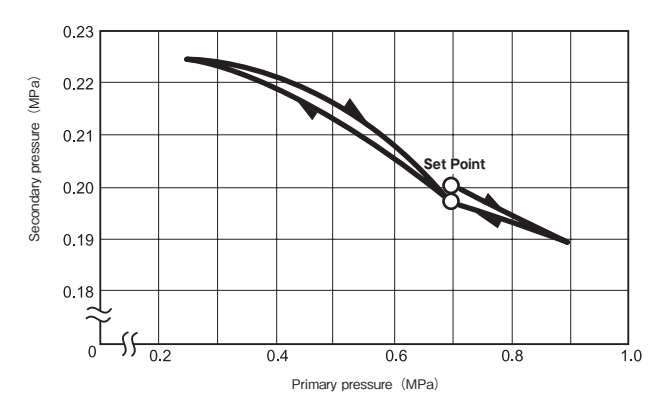

PRV11B-25A

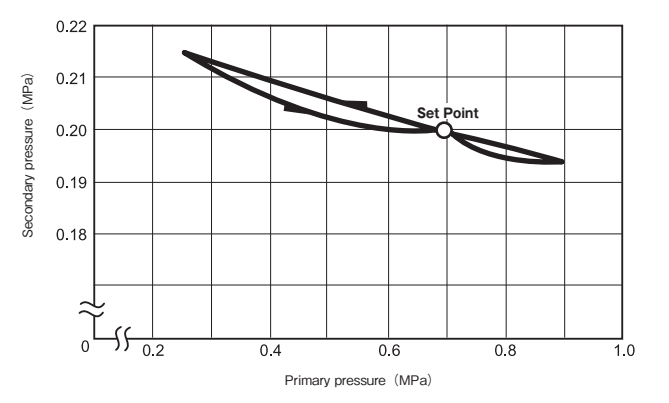

PRV2-14-40A

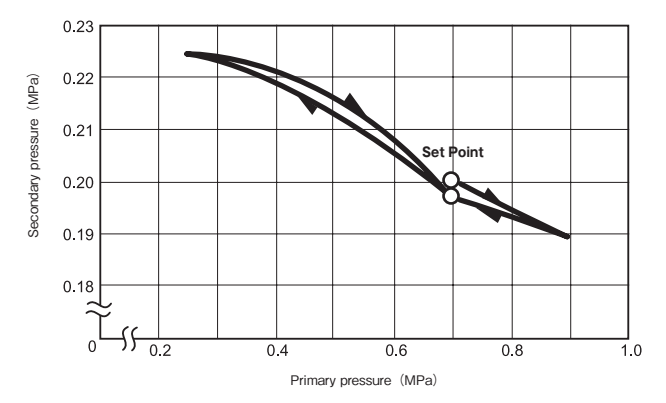

Performance Tables

Flow characteristics graphs

PRV11B-20A・25A

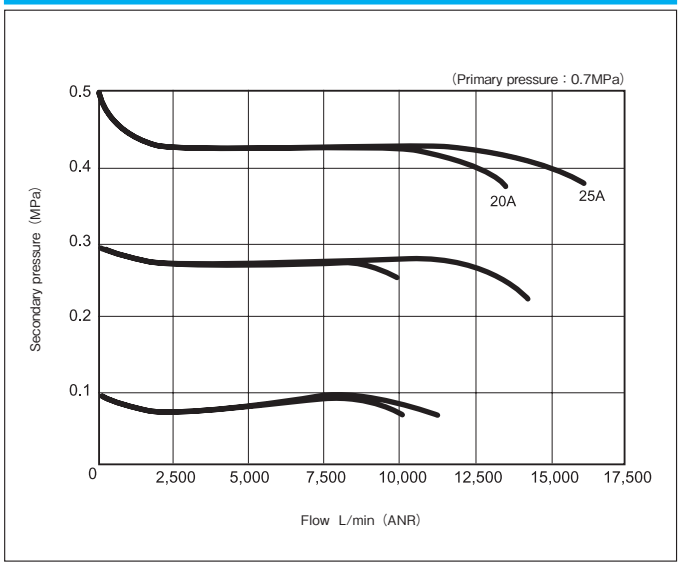

PRV2-14-32A・40A

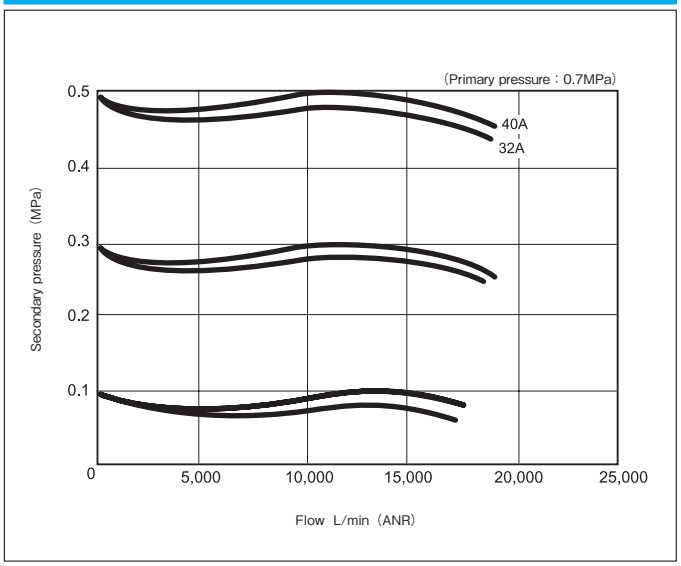

Operating Instructions

1 Fluid

- Use the regulator with clean fluids only. Dirt,wastes,etc.in the fluid may cause regulator malfunction.

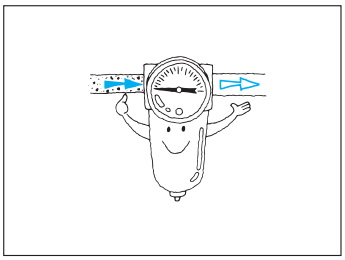

2 Lubrication

- In general,do not attempt to lubricate the regulator. When disassembling for checking,however,apply grease.

3 Bracket

- The regulator mounting bracket is available as an option.For the mounting of the bracket,see the figure at right.
- Remove any three machine screws from the upper part of the regulator.Attach the bracket to the regulator by means of the three longer machine screws supplied with the regulator.

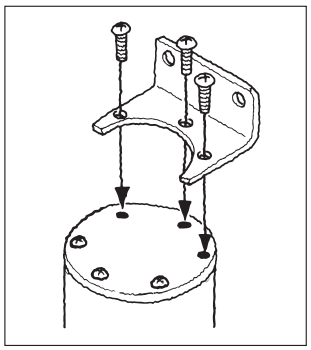

Precision REGULATORS

RV10C	Standard type	RC 1/4 ~ 1/2

This is a precision,pilot-operated regulator,capable of a wide range of stable pressure settings. The built-in check valve permits secondary pressure to be fed back to the primary side if the primary pressure supply is shut off.

JIS Symbol

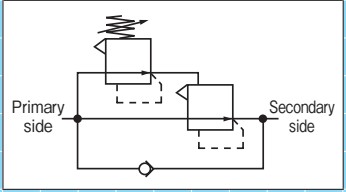

Model Code

When ordering,specify the model as follows:

Standard type

Rc 1/4 ~ 1/2

RV10C – ① – ②

① Port size ② Pressure gauge

① Port size	
Rc 1/4	8A
Rc 3/8	10A
Rc 1/2	15A

● In case of 8A , bushings are threaded to the piping port.

② Pressure gauge	
Without	No entry
With	G

● Pressure gauge is not mounted but appended with regulators.

Specifications

Model code		RV10C		
Port size		8A	10A	15A
		Rc1/4	Rc3/8	Rc1/2
Operating pressure	Primary side (IN)	Max.1.0MPa		
	Secondary side (OUT)	0.01 ~ 0.7MPa		
Sensitivity		0.0005MPa		
Operating temperature		5 ~ 60℃		
Mass		2.0kg		

● For specifications other than those listed above,please contact us.

Outside Dimensions

RV10C-8A・10A・15A

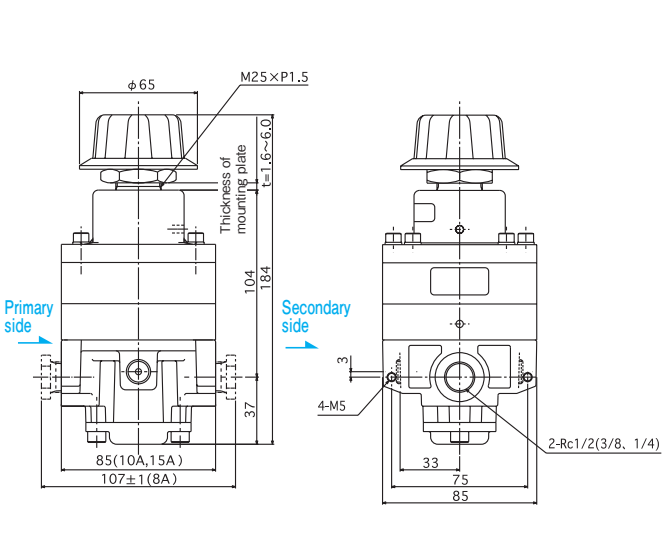

Performance Tables

Pressure characteristics graphs

RV10C-15A

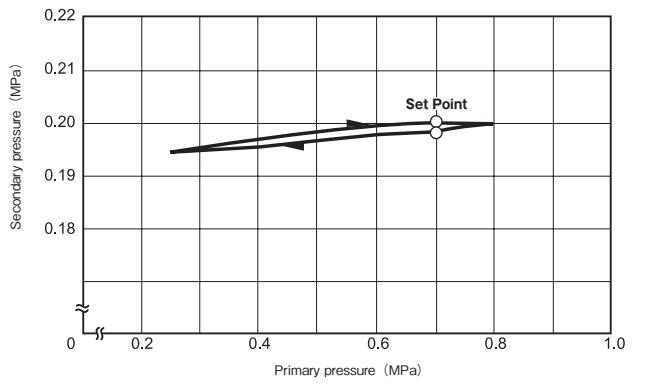

Flow characteristics graphs

RV10C-15A

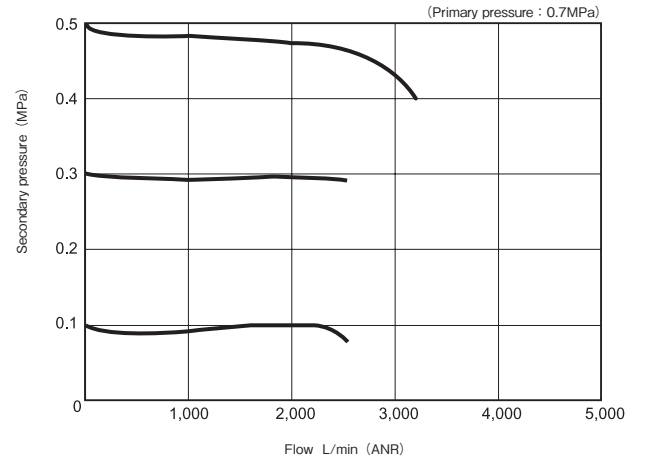

Operating Instructions

1 Fluid

- Use the regulator with clean fluids only.Dirt,wastes,etc.in the fluid may cause regulator malfunction.

2 Lubrication

- In general,do not attempt to lubricate the regulator.When disassembling for checking,however,apply grease.

3 Pressure

- To lower the pressure setting,lower the present setting below the target point first,and then increase the setting to the target point.

Precision REGULATORS

RV6	Standard type	RC 1/4 ~ 1/2

The nozzle flapper high-sensitivity pilot amplification system has achieved adjustable sensitivity of 0.001MPa.Large relief flow enables strong resistance against excessive pressure at secondary side and prevents reverse flow.This regulator is suitable for balancer and tension control.

JIS 記号

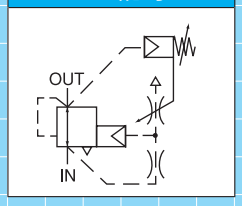

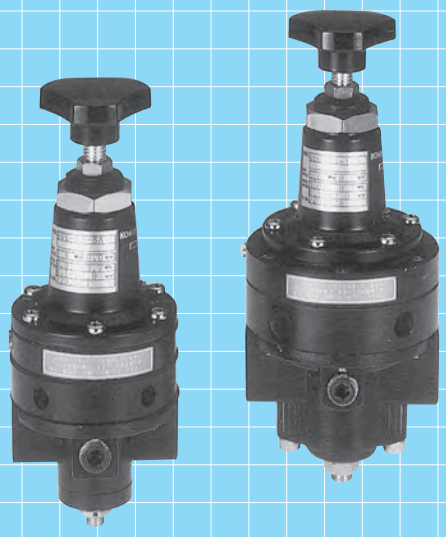

Model Code

When ordering,specify the model as follows:

Standard type

Rc 1/4 ~ 3/8

RV6-03-①-②-④-⑤

- ① Secondary operating pressure
- ② Port size
- ④ Pressure gauge
- ⑤ Bracket

Rc 3/8 ~ 1/2

RV6-04-①-③-④-⑤

- ① Secondary operating pressure
- ③ Port size
- ④ Pressure gauge
- ⑤ Bracket

① Secondary operating pressure range

Generay purpose	0.01 ~ 0.7	No entry
Middle pressure purpose	0.01 ~ 0.4	4
Low pressure purpose	0.01 ~ 0.2	2

② Port size

Rc1/4	8A
Rc3/8	10A

③ Port size

Rc3/8	10A
Rc1/2	15A

④ Pressure gauge

Without	No entry
With	G

- Pressure gauge is not mounted but appended with regulators.

⑤ Bracket

Without	No entry
With	BR

- Bracket is not mounted but appended with regulators.

Specifications

Model code			RV6-03		RV6-04
Port size			8A	10A	15A
			Rc1/4	Rc3/8	Rc1/2
Applicoble Fluid			Dry air after filter passage less than 5μm.		
Operating pressure	Primary side (IN)		Max.1.0MPa		
	Secondary side (OUT)	Generay purpose	0.01 ~ 0.7MPa		
		Middle pressure purpose	0.01 ~ 0.4MPa		
		Low pressure purpose	0.01 ~ 0.2MPa		
Sensitivity			0.001MPa		
Operating temperature ramge			− 20 ~ 60℃		
Mass			1.0kg		1.4kg

- Do not use fluid containing oil.
- For use below 5℃ ,provide adequate measures against freezing.
- For specifications other than those listed above,please contact us.
- Minimal leakage may occur due to the diaphragm performance characteristics.This dose not affect the regulator function at all.

Characteristic table

		RV6-03	RV6-04	Note
Rated flow	Primary side → Secondary side	700L/min (ANR)	1600L/min (ANR)	● Flow rate of air pressure when primary pressure is 0.7MPa and secondary pressure 0.5MPa.
	At relief	700L/min (ANR)	1600L/min (ANR)	
Air consumption		3L/min (ANR)	5L/min (ANR)	● Primary pressure:0.7MPa
Pressure charac teristic		Less than 0.01MPa		● Secondary pressurefluctuation due to change in primary pressure.

Outside Dimensions

RV6-03-8A・10A

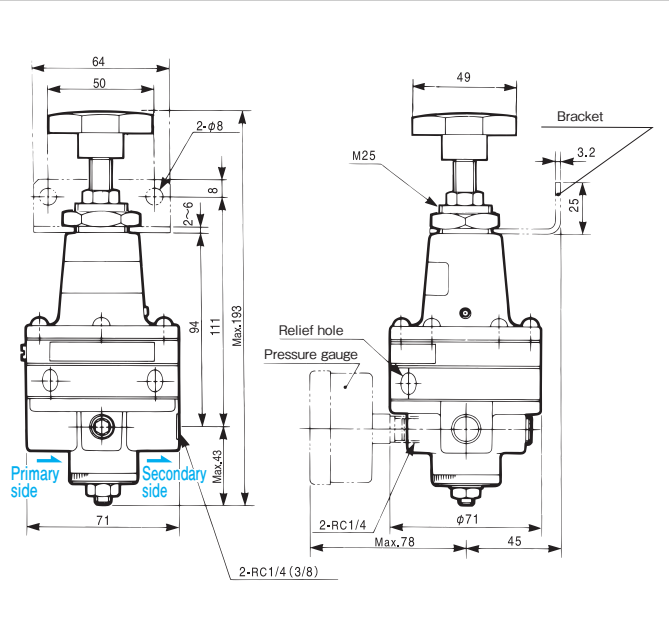

RV6-04-10A・15A

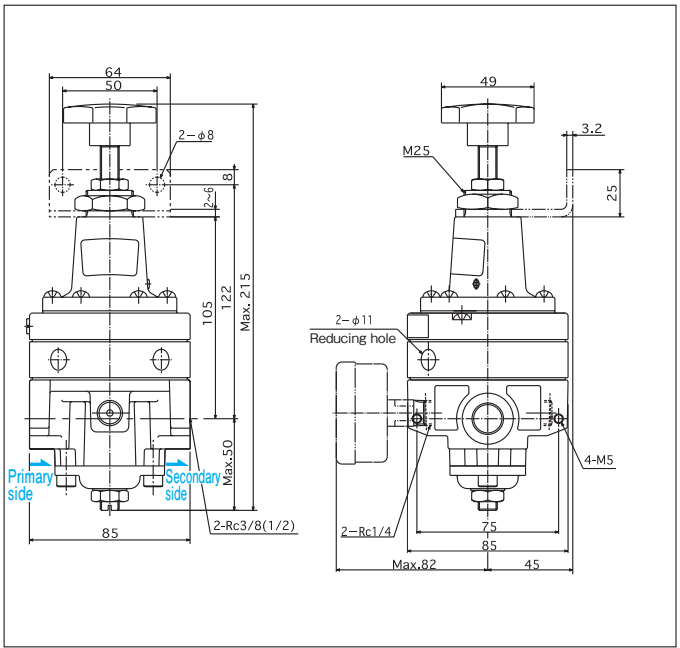

Performance Tables

Pressure characteristics graphs

RV6-03-8A・10A

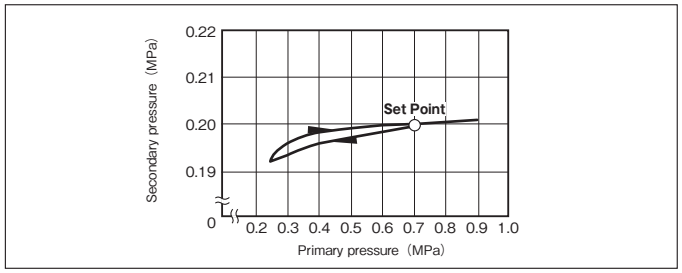

RV6-04-10A・15A

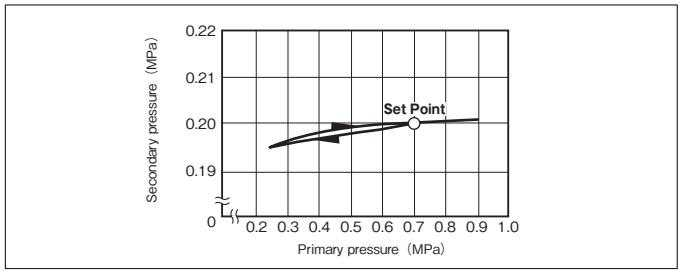

Flow characteristics graphs

RV6-03-8A・10A

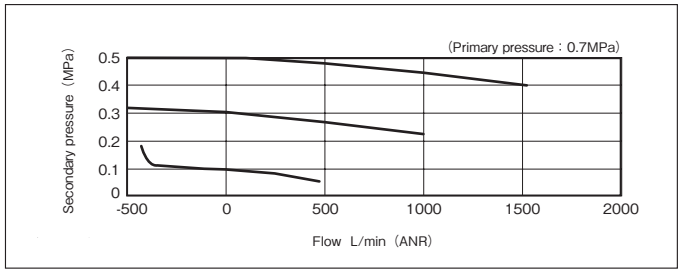

RV6-04-10A・15A

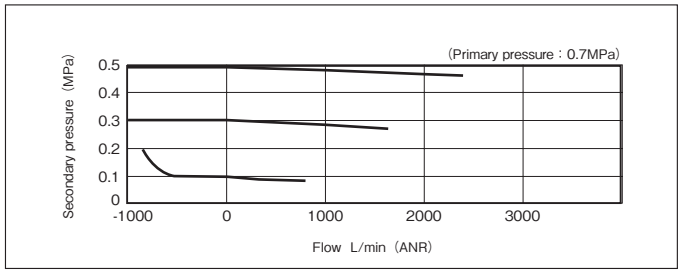

Operating Instructions

1 Installation

- In principle install RV6 precision type regulator vertically (so that wheel comes either top or bottom) .
- Install in correct direction as indicated by an arrow mark on the body to make sure correct air flow.

2 Fluid

- For air supply to the primary side,filtrate the fluid using an air filter with filtration less than 5μm.
- When high temperature air reaches the nozzle of the pilot valve,oil film may be created on the surface of the nozzle.in order to avoid this,use after-cooler or dryer.

3 Lubrication

- Do not lubricate the regulator.
- When lubricating downstream components using lubricator in open air,perform the process at secondary side of the regulator.

4 Bracket

- Bracket is avalable as an option. For mounting,remove the wheel and lock nut (cramp) and inset the bracket.

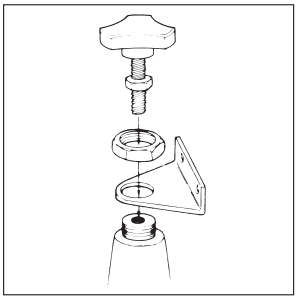

5 Pressure

- Turn the wheel while checking the pressure regulator to set pressure. (Turn clockwise to increase the pressure and counterclockwise to decrease the pressure.)

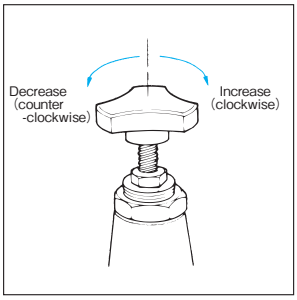

- Set the primary pressure about 0.1 MPa higher than the secondary set pressure.If there is no pressure difference,available flow volume is decreased.
- Fasten the lock nut tight if it is necessary to avoid vibration and maintain set position.

0.02 to 0.2MPa
REGULATORS

RV2-G	RC 1/4 ~ 1
RV21-G	RC 3/8 ~ 1/2

This is a regulator exclusively for use in low pressure lines.This wide range of available pressure settings facilitates precise pressure adjustments.

JIS Symbol

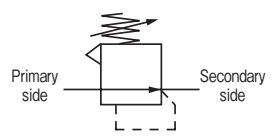

Model Code

When ordering,specify the model as follows:

Standard type

Rc 1/4 ~ 3/8 **RV2-03-[1]-[4]-[5]-[6]-G4177**

- [1] Port size
- [4] Operating temperature range
- [5] Pressure gauge
- [6] Bracket

Rc 3/8 ~ 1/2 **RV21-04-[2]-[4]-[5]-[6]-G4528**

- [2] Port size
- [4] Operating temperature range
- [5] Pressure gauge
- [6] Bracket

Rc 3/4 ~ 1 **RV2-08-[3]-[4]-[5]-[6]-G4247**

- [3] Port size
- [4] Operating temperature range
- [5] Pressure gauge
- [6] Bracket

[1] Port size

Rc1/4	8A
Rc3/8	10A

[2] Port size

Rc3/8	10A
Rc1/2	15A

[3] Port size

Rc3/4	20A
Rc1	25A

[4] Operating temperature range

General purpose	– 20 ~ 60℃	No entry
Heat-resistant	5 ~ 100℃	HT
Freeze-resistant	– 40 ~ 45℃	LT

- For corrosion.freeze resistant type,allow some margin for delivery.
- In operating temperatures of 5℃ or less, provide adequate measures against freezing.

[5] Pressure gauge

Without	No entry
With	G

- Pressure gauge sizes : 50mm dia. Scale : 0 ~ 0.2MPa
- Pressure gauge is not mounted but appended with regulators.

[6] Bracket

Without	No entry
With	BR

- Bracket is not mounted but appended with regulators.

Specifications

Model code		RV2-03-[1]-G4177		RV21-04-[2]-G4528		RV2-08-[3]-G4247	
Port size		8A	10A	10A	15A	20A	25A
		Rc1/4	Rc3/8	Rc3/8	Rc1/2	Rc3/4	Rc1
Operating pressure	Primary side (IN)	Max.1.0MPa					
	Secondary side (OUT)	0.02 ~ 0.2MPa					
Proof pressure		1.5MPa					
Operating temperature		See Model Code section.					
Mass		0.58kg		0.84kg		2.5kg	

- For specifications other than those listed above,please contact us.

Outside Dimensions

RV2-03-8A・10A-G4177

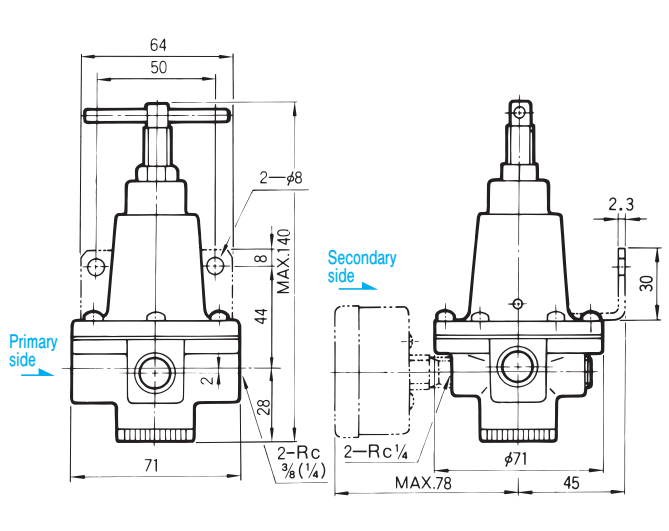

RV21-04-10A・15A-G4528

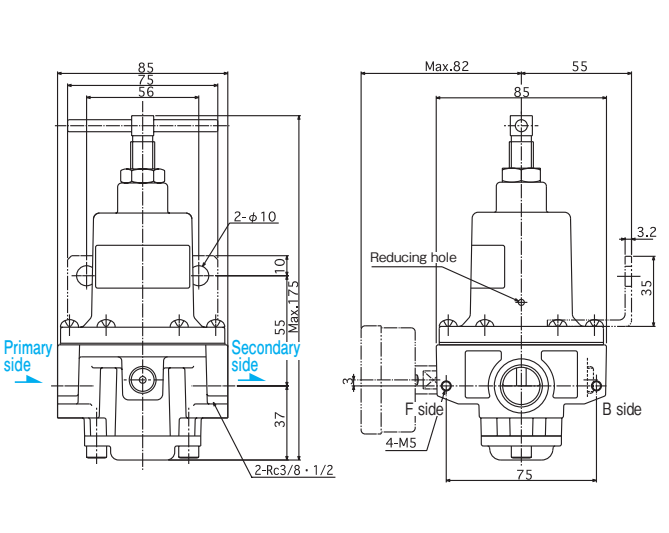

RV2-08-20A・25A-G4247

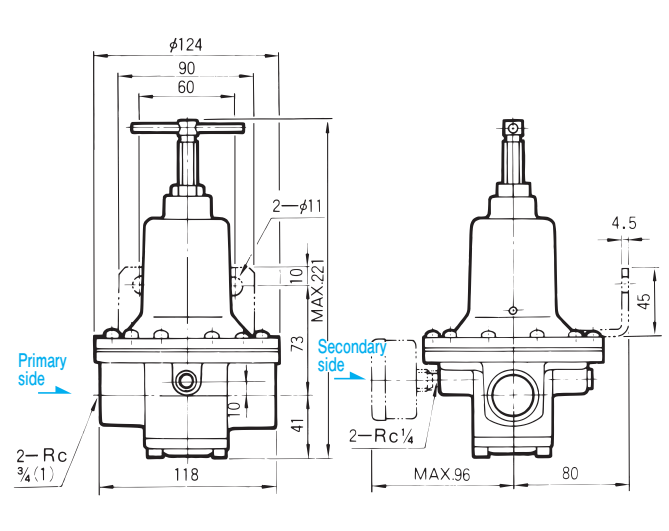

Performance Tables

Flow characteristics graphs

RV2-03-8A・10A-G4177

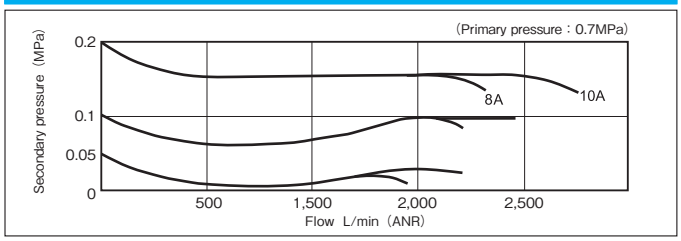

RV21-04-10A・15A-G4528

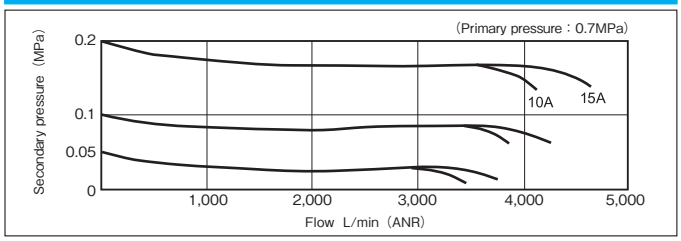

RV2-08-20A・25A-G4247

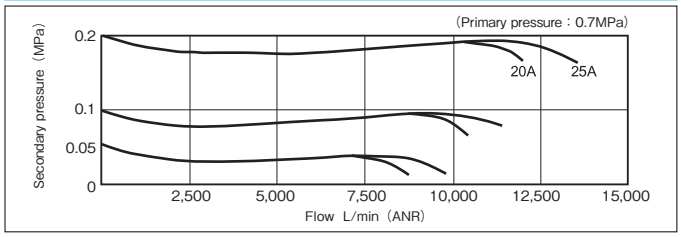

Operating Instructions

1 Installation

- For a circuit where the flow of air is reversed,running from the secondary to the primary side,install a check valve in parallel,as shown.

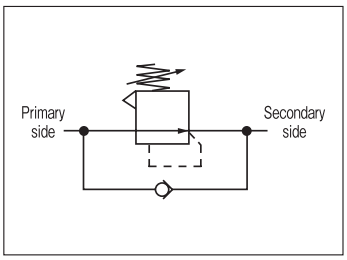

2 Fluid

- Use the regulator with clean fluids only.Dirt,waste,etc.in the fluid may cause regulator malfunction.

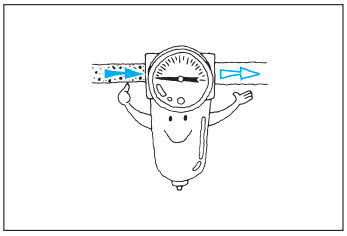

3 Lubrication

- In general,do not attempt to lubricate the regulator.When disassembling for checking,however,apply grease.

4 Bracket

- The regulator mounting bracket is available as an option.
- Remove any three machine screws from the upper part of the regulator.Attach the bracket to the regulator by means of the longer machine screws supplied with the regulator.

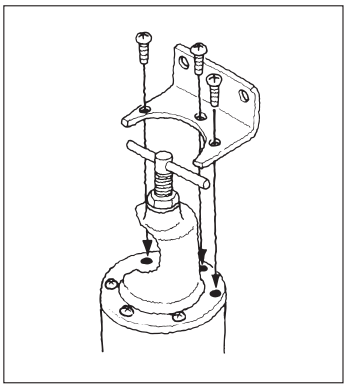

5 Pressure

- To lower the pressure setting,lower the present setting below the target point first,and then increase the setting to the target point.
- After setting,be sure to tighten the locknut.

0 to 0.04MPa
REGULATORS

RV6-G	Standard type	RC 1/4 ~ 3/8

The nozzle flapper high-sensitivity pilot amplification system has achieved
adjustable 0 to 0.04 MPa control.
Outside dimensions are same as standard model of RV6-03.

JIS Symbol

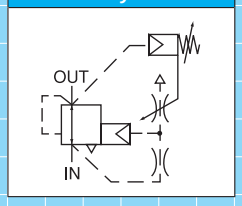

Model Code

When ordering,specify the model as follows:

Standard type

Rc 1/4 ~ 3/8

RV6-03 – ① – ② – ③ – G3267

① Port size ② Pressure gauge ③ Bracket

① Port size	
Rc 1/4	8A
Rc 3/8	10A

② Pressure gauge	
Without	No entry
With	G

● Pressure gauge is not mounted but appended with regulators.

③ Bracket	
Without	No entry
With	BR

● Bracket is not mounted but appended with regulators.

Specifications

Model code		8A	10A
		Rc1/4	Rc3/8
Applicoble Fluid		Dry air after filter passage less than 5μm	
Operating pressure	Primary side (IN)	Max.0.7MPa	
	Secondary side (OUT)	0 ~ 40kPa	
Sensitivity		0.001MPa	
Operating temperature ramge		− 20 ~ 60℃	
Mass		1.0kg	

● Do not use fluid containing oil.
● For use below 5℃ ,provide adequate measures against freezing.
● For specifications other than those listed above,please contact us.
● Minimal leakage may occur due to the diaphragm performance characteristics.This dose not affect the regulator function at all.

Characteristic table

Rated flow	Primary side → Secondary side	30L/min (ANR)
	At relief	30L/min (ANR)
Air consumption		3L/min (ANR)

Outside Dimensions

RV6-03-8A・10A-G3267

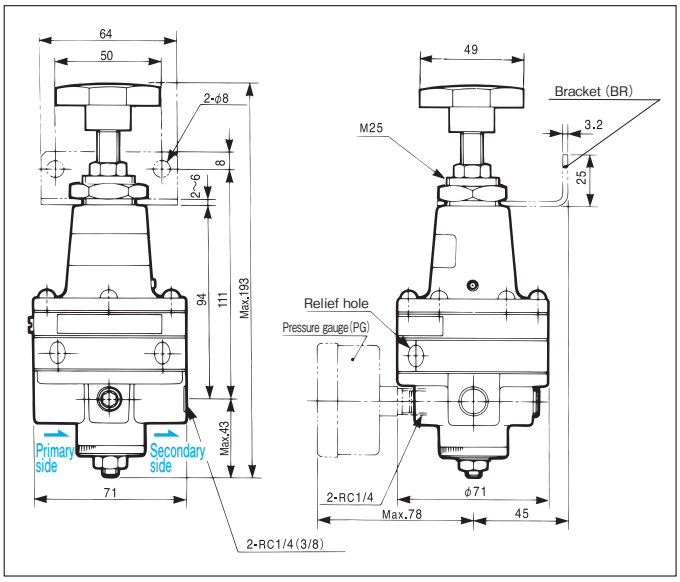

Flow characteristics graphs

Standard type

Performance Tables

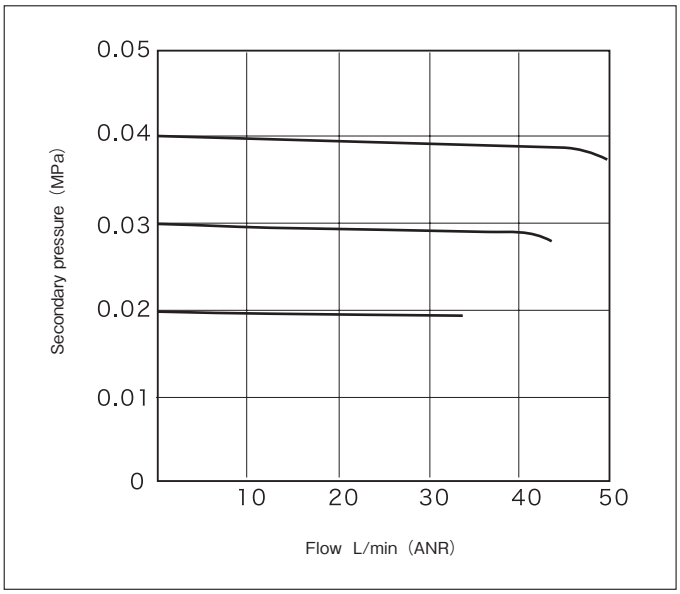

Operating Instructions

1 Installation

- In principle install RV6 precision type regulator vertically (so that wheel comes either top or bottom) .
- Install in correct direction as indicated by an arrow mark on the body to make sure correct air flow.

2 Fluid

- For air supply to the primary side,filtrate the fluid using an air filter with filtration less than 5μm.
- When high temperature air reaches the nozzle of the pilot valve,oil film may be created on the surface of the nozzle.in order to avoid this,use after-cooler or dryer.

3 Lubrication

- Do not lubricate the regulator.
- When lubricating downstream components using lubricator in open air,perform the process at secondary side of the regulator.

4 Bracket

- Bracket is avalable as an option. For mounting,remove the wheel and lock nut (cramp) and inset the bracket.

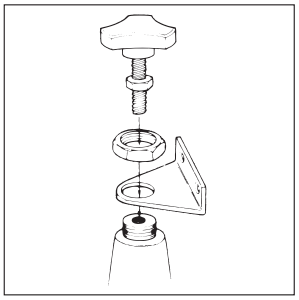

5 Pressure

- Turn the wheel while checking the pressure regulator to set pressure. (Turn clockwise to increase the pressure and counterclockwise to decrease the pressure.)

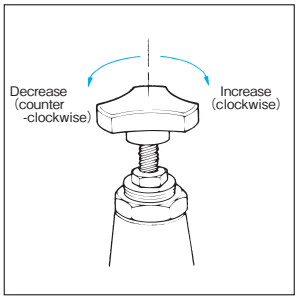

- Set the primary pressure about 0.1 MPa higher than the secondary set pressure.If there is no pressure difference,available flow volume is decreased.
- Fasten the lock nut tight if it is necessary to avoid vibration and maintain set position.

Electric REGULATORS

Size	RC 1/4 · 3/8

In this electric regulator,the rotating force of the motor is connected to a pushing force,allowing pressure control.
It is suitable for pressure control in sonfined places or from remote points.

JIS Symbol

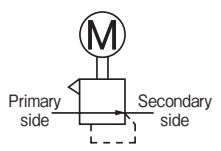

Features

Assured safety

- The set pressure will not change even if the motor is turned off.

Safe design

- The upper limit switch automatically stops the motor,preventing supply at an excessive pressure if the pressure rise above a given level.

Multifuhction design

- In combination with a booster relay,the regulator can control the pressure of large-flow Imes.

Model Code

When ordering,specify the model as follows:

380-3075 ❶ – ❷

- ❶ Operating pressure range
- ❷ Port size

❶ Operating pressure range

0.05 ~ 0.5MPa	No entry
0.02 ~ 0.3MPa	L

❷ Port size

Rc1/4	8A
Rc3/8	10A

Specifications

Model code		380-3075		380-3075L	
Port size		8A	10A	8A	10A
		Rc1/4	Rc3/8	Rc1/4	Rc3/8
Operating pressure	Primary side (IN)	Max.0.98MPa			
	Secondary side (OUT)	0.05 ~ 0.5MPa		0.02 ~ 0.3MPa	
Proof pressure		1.5MPa			
Pressure setting speed		about 5s/0.1MPa			
Bleed from relief valve		1L/min (ANR) or less			
Operating temperature		− 10 ~ 50℃ (For use below 5℃ ,provide adequate measures against freezing.)			
Motor	Voltage	AC100V (50/60Hz)	AC110V (50/60Hz)	AC115V (50/60Hz)	
	Current	0.15A	0.12A	0.12A	
	Output	2W			
	Wiring diagram	Motor / Provided capacitor (1.5μF) / Built-in limit switch / Motor wiring drawing (sample circuit)			

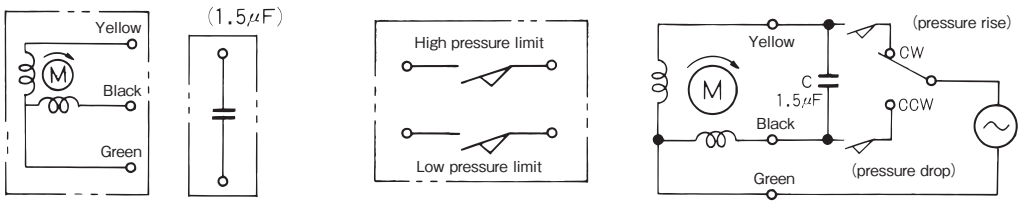

- Motor wiring should be conducted according to the above drawing (sample circuit) ,paying attention to the color of lead wise.

Outside Dimensions

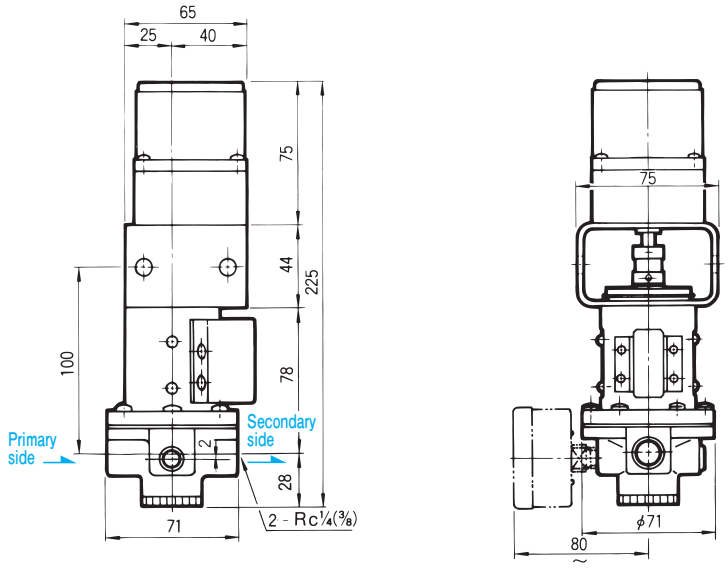

Performance Tables

Pressure characteristics graphs

8A

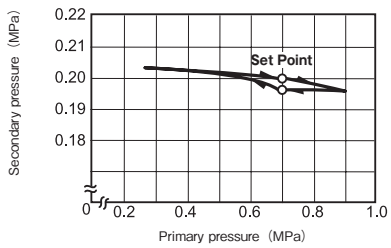

10A

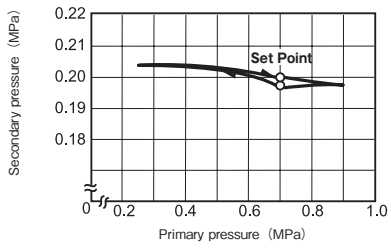

Flow characteristics graphs

8・10A

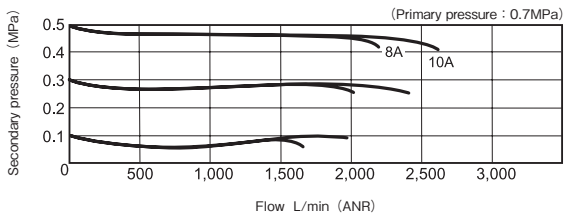

Applications

The electric regulator is best suited to the following applications :

Remote pressure control from central control rooms,etc.

Pressure control in confined places and where access is difficult.

Pressure control is hazardous places.

Operating Instructions

1 Fluid

- Use the regulator with clean fluids only.Dirt,waste,etc.in the fluid may cause regulator malfunction.

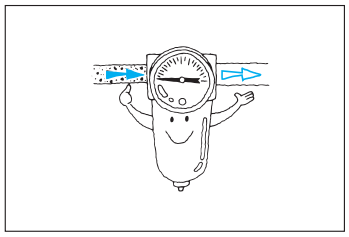

2 Wiring

- A limit switch is provided to prevent the motor iron running out of control.Wire the regulator so that the motor stops if the limit switch operates.

3 Piping

- Since it is difficult to set the regulator for pressure at high loads,make the piping as short as possible.

4 Pressure

- Set the pressure while observing the pressure gauge.

VOLUME BOOSTERS

VB3	Standard type	RC 3/8 ~ 2

Volume booster maintains pressure supply to air tanks and actuators,and provides great performance where rapid pressure relief is required.It can be operated remotely using a pilot-operated regulator at a nearby,convenient point.

JIS Symbol

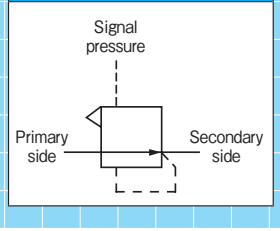

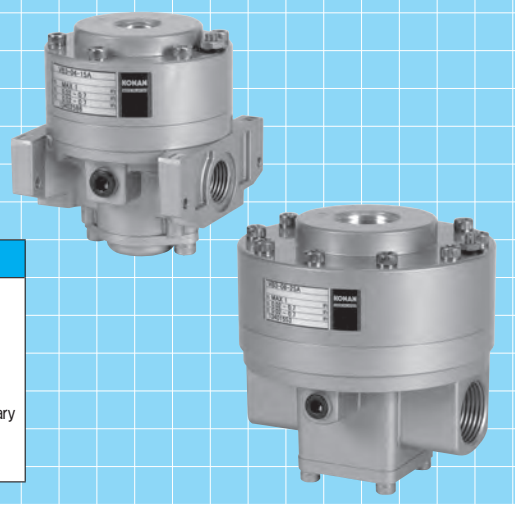

Model Code

When ordering,specify the model as follows:

Standard type

Rc 3/8 ~ 1/2

VB3 ① –04 – ② – ④ – ⑤

- ① Corrosion-resistant
- ② Port size
- ④ Pressure gauge
- ⑤ Bracket

Rc 3/4 ~ 1

VB3 ① –08 – ③ – ④ – ⑤

- ① Corrosion-resistant
- ③ Port size
- ④ Pressure gauge
- ⑤ Bracket

Rc 2

VB3 – 20 – 50A – ④

- ④ Pressure gauge

① Corrosion-resistant

- Portions that are exposed to outside weather conditions are corrosion-resistant coating and the exposed bolts,nuts and brackets are stainless steel.

Standard	No entry
Corrosion-resistant type	S

② Port size

Rc 3/8	10A
Rc 1/2	15A

③ Port size

Rc 3/4	20A
Rc 1	25A

④ Pressure gauge

Without	No entry
With	G

- Pressure gauge is not mounted but appended with regulators.

⑤ Bracket

Without	No entry
With	BR

- Bracket is not mounted but appended with regulators.

Specifications

Model code		VB3-04		VB3-08		VB3-20
Port size		10A	15A	20A	25A	50A
		Rc3/8	Rc1/2	Rc3/4	Rc1	Rc2
Applicoble Fluid		Dry air after filter passage less than 40 μm				
Operating pressure	Primary side (IN)	Max.1.0MPa				
	Signal pressure	0.02 ~ 0.7MPa				0.05 ~ 0.8MPa
	Secondary side (OUT)	0.02 ~ 0.7MPa				0.05 ~ 0.8MPa
	Pressure raito	Signal pressure : Secondary side = 1 : 1				
Accuracy		Less than ± 0.014MPa (Less than2% FS)Please consult us.				
Operating temperature range		− 20 ~ 60℃				
Mass		1.2kg		3.5kg		9.2kg

- For use below 5℃ ,provide adequate measures against freezing.
- Make sure that the primary pressure is at least 0.1MPa higher than the secondary pressure.

Characteristic table

		VB3-04	VB3-08	Note
Rated flow	Primary side → Secondary side	2,200L/min (ANR)	6,500L/min (ANR)	● Flow rate of air pressure when primary pressure is 0.7MPa and secondary pressure 0.5MPa.
	At relief	2,200L/min (ANR)	6,500L/min (ANR)	
Air consumption		Less than 0.6L/min (ANR)	Less than 1.2L/min (ANR)	● Primary pressure : 0.7MPa at needle valve is full open.
Pressure characteristic		Less than 0.01MPa		● Secondary pressurefluctuation due to change in primary pressure.

Operation

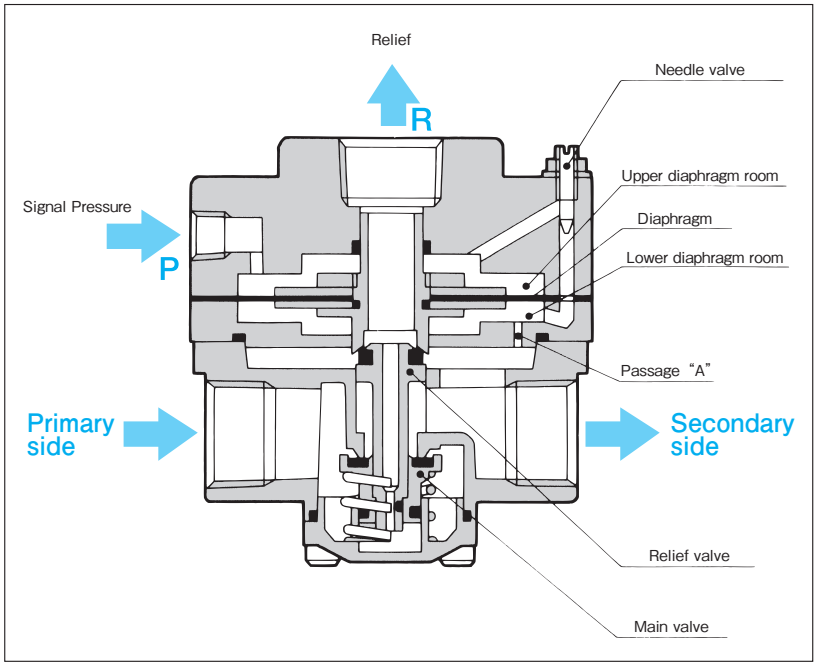

① Signal pressure enters from the pilot port (P) to the upper diaphragm room and acts on the diaphragm to open the main valve.
② The primary pressure flows through the main valve to the secondary side and increase the secondary pressure,while entering through passage A to the lower diaphragm room and acts on the diaphragm.
③ When the secondary pressure and the signal pressure are equal,the main valve closes to hold the secondary pressure.
④ When the secondary pressure is higher than the signal pressure,the diaphragm is pushed up to open the relief valve.The secondary pressure is then exhausted through the relief port (R) until the second pressure is equal to the signal pressure.
⑤ The needle valve is used as a by-path between signal pressure side and primary side.When strained (turned clockwise),response of the secondary pressure to the signal pressure becomes faster.When needle valve is open (turned counterclockwise),the response becomes slower. Adjust the needle valve to obtain stable operation of the regulator.

Outside Dimensions

VB3-04-10A・15A

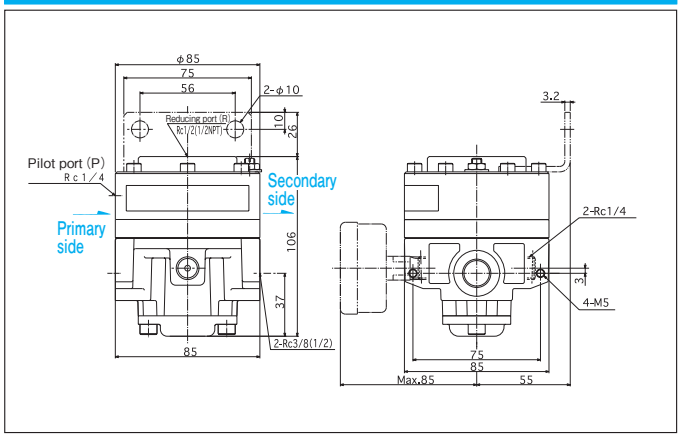

VB3-08-20A・25A

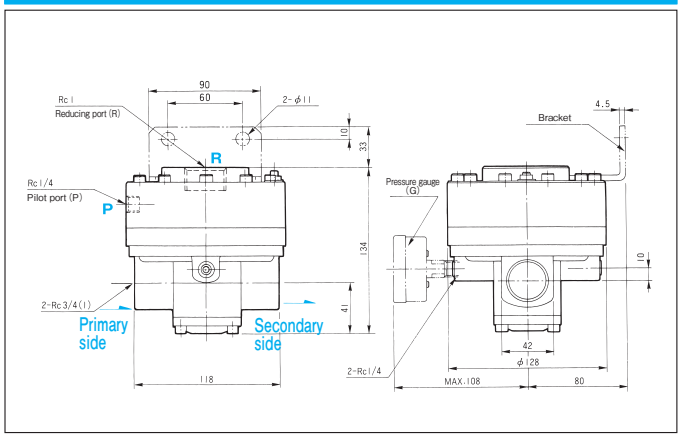

VB3-20-50A

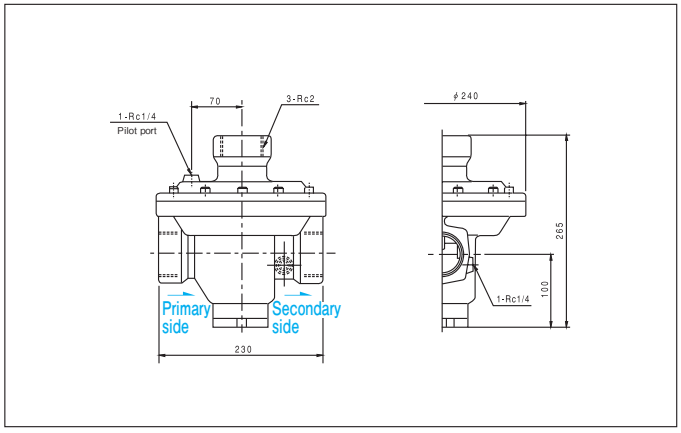

Performance Tables

(With needle valve fully closed) ● For the characteristics of VB3-20-50A, please contact us.

Flow characteristics graphs ● pressure conditions —— Primary pressure : 0.7MPa

VB3-04-10A

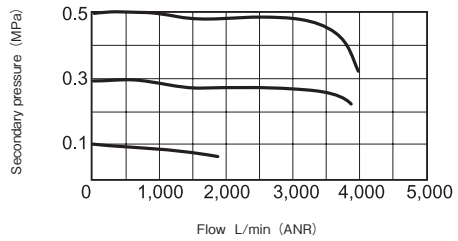

VB3-08-20A

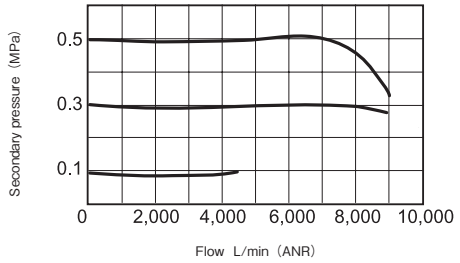

VB3-04-15A

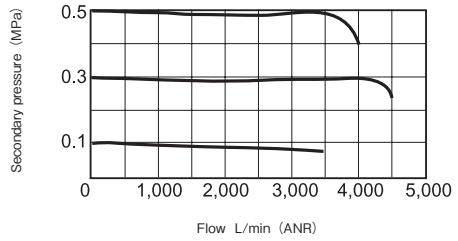

VB3-08-25A

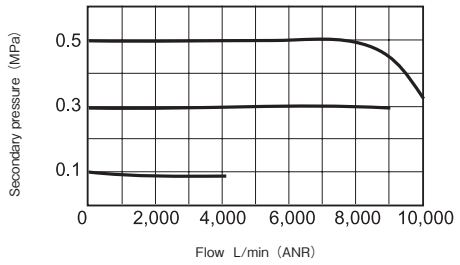

Relief flow characteristics graphs ● pressure conditions —— Primary pressure : 0.7MPa

VB3-04-10A・15A

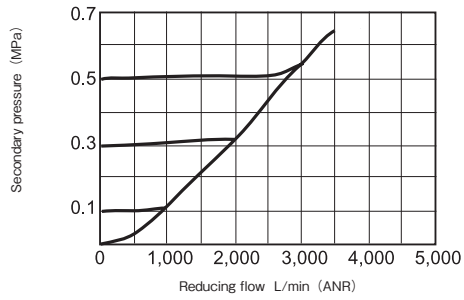

VB3-08-20A・25A

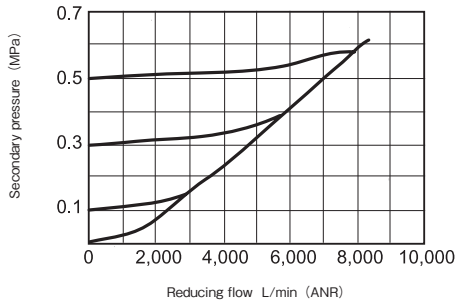

Pressure characteristics graphs ● Initial-setting pressure conditions — Primary pressure : 0.7MPa, Secondary pressure : 0.2MPa,

VB3-04-10A・15A

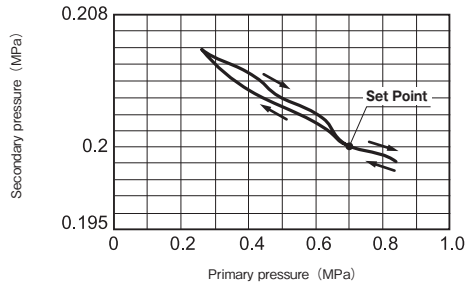

VB3-08-20A・25A

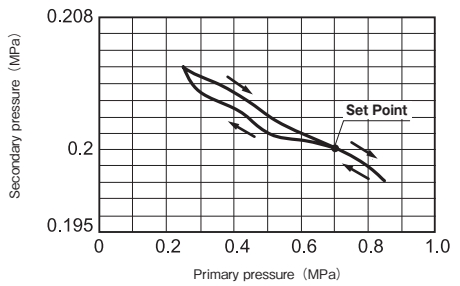

Operating Instructions

1 Installation

- Perform enough air flushing of pipes and piping materials to eliminate dusts and foreign substances completely before connecting to components.
- Install in correct direction as indicated by an arrow mark on the body to make sure correct air flow.
- Always open the relief port to the atmosphere or connect a silencer.When relief port is closed or pressurized,the volume booster cannot be normally operated.

2 Fluid

- For air supply to the primary side,filtrate the fluid using an air filter with filtration less than 40μm.

3 Lubrication

- Do not lubricate the volume booster.
- When lubricating downstream components using lubricator in open air,perform the process at secondary side of the volume booster.

4 Bracket

- Bracket is avalable as an option.

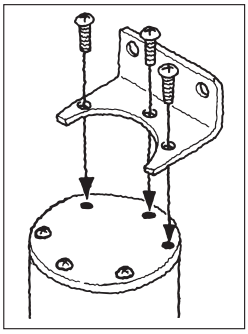

5 Pressure

- Set and adjust the secondary pressure using a pilot-operated regulator.
- Set primary pressure about 0.1 MPa higher than the secondary set pressure.If there is no pressure difference,available flow volume is decreased.

Precision type
VOLUME BOOSTERS

VB7	Precision type	RC 1/4 ~ 1

VB7 series precision type volume booster provides excellent performance supported by superior flow rate,accuracy,amplification factor,response and relief characteristics.

JIS Symbol

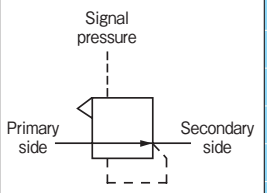

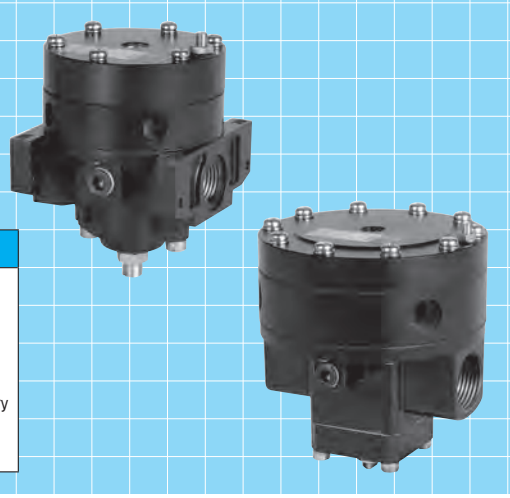

Features

High precision
- Outstanding input/output precision assures significantly low hysteresis at pressure rise/down.

Minimal cracking pressure
- Minimal cracking pressure with flow rate at around 0L/min allows rapid response to slight pressure change.

Large fluid amplification factor
- Even minimal change in signal pressure can produce large fluid rate.

Slight pressure fluctuation
- Outstanding pressure characteristics minimize the effect of the primary pressure change on the secondary pressure.

Large relief flow
- With its large telief flow volume.VB7 is suitable for tension control.

By-path system
- A built-in needle valve reduces electrode hunting that may occur on the electric circuit.

Model Code

When ordering,specify the model as follows:

Standard type

Rc 1/4 ~ 3/8 — **VB7-03 – ① – ④ – ⑤**
- ① Port size
- ④ Pressure gauge
- ⑤ Bracket

Rc 3/8 ~ 1/2 — **VB7-04 – ② – ④ – ⑤**
- ② Port size
- ④ Pressure gauge
- ⑤ Bracket

Rc 3/4 ~ 1 — **VB7-08 – ③ – ④ – ⑤**
- ③ Port size
- ④ Pressure gauge
- ⑤ Bracket

① Port size

Rc1/4	8A
Rc3/8	10A

② Port size

Rc3/8	10A
Rc1/2	15A

③ Port size

Rc3/4	20A
Rc1	25A

④ Pressure gauge

Without	No entry
With	G

- Pressure gauge is not mounted but appended with regulators.

⑤ Bracket

Without	No entry
With	BR

- Bracket is not mounted but appended with regulators.

Specifications

Model code		VB7-03	VB7-04		VB7-08	
Port size		8A	10A	15A	20A	25A
		Rc1/4	Rc3/8	Rc1/2	Rc3/4	Rc1
Applicoble Fluid		Dry air after filter passage less than 40μm				
Operating pressure	Primary side (IN)	0.1 ～ 1.0MPa				
	Signal pressure	0.01 ～ 0.7MPa				
	Secondary side (OUT)	0.01 ～ 0.7MPa				
	Pressure raito	Signal pressure : Secondary side = 1 : 1				
Accuracy		Less than ± 0.007MPa (Less than 1% FS 以下)				
Operating temperature ramge		− 20 ～ 60℃				
Mass		0.6kg	1.0kg		2.5kg	

- For use below 5℃ ,provide adequate measures against freezing.
- Make sure to produce at least 0.1MPa of pressure difference between primary and secondary sides of the pressure port,or appropriate flow rate cannot be achieved.
- Minimal leakage may occur due to the diaphragm performance characteristics.This does not have any problem to the function.

Characteristic table

		VB7-03	VB7-04	VB7-08	Note
Rated flow	Primary side→ Secondary side	700L/min (ANR)	1.600L/min (ANR)	5.000L/min (ANR)	● Flow rate of air pressure when primary pressure is 0.7MPa and secondary pressure 0.5MPa.
	At relief	700L/min (ANR)	1.600L/min (ANR)	5.000L/min (ANR)	
※ Air consumption		Less than 1L/min (ANR)	Less than 2L/min (ANR)	Less than 4L/min (ANR)	● Primary pressure : 0.7MPa
Pressure characteristic		0.01MPa 以下			● Secondary pressure fluctuation due to change in primary pressure.

- Air consumption (※) specifies leakage from the relief port after metal seal valve.

Operation

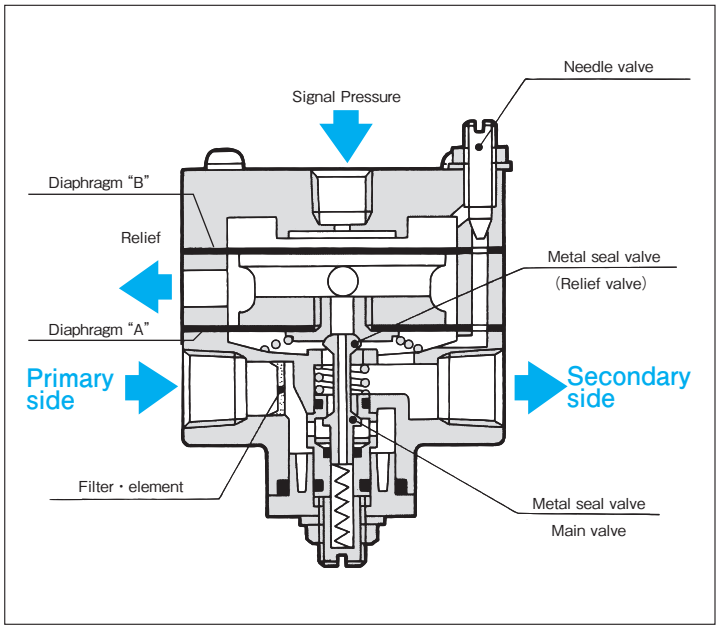

❶ Diaphragm "B"

Signal pressure acts on diaphragm B to open the valve.

❷ Diaphragm "A"

The secondary pressure acts on diaphragm A against signal pressure.When the secondary pressure is lower than the signal pressure,diaphragm A is forced down and the valve opens.When both pressures are equal,the valve closes. When the secondary pressure is higher than the signal pressure,relief valve opens and releases the secondary pressure until the secondary pressure is equal to the signal pressure.

❸ Needle valve

When needle valve is opened,the secondary side is connected to signal pressure side.This mechanism maintains safe and stable operating condition.

Outside Dimensions

VB7-03-8A・10A

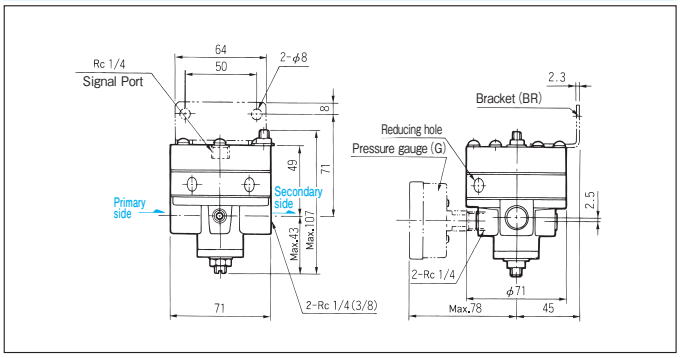

VB7-08-20A・25A

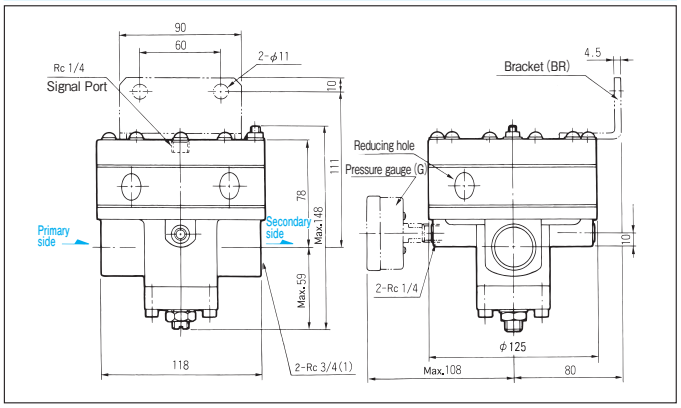

VB7-04-10A・15A

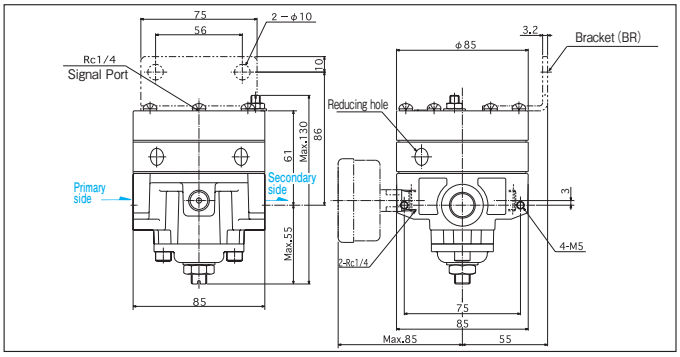

Performance Tables

(With needle valve fally closed)

Flow characteristics graphs

● pressure conditions —— Primary pressure : 0.7MPa

VB7-03-8A・10A

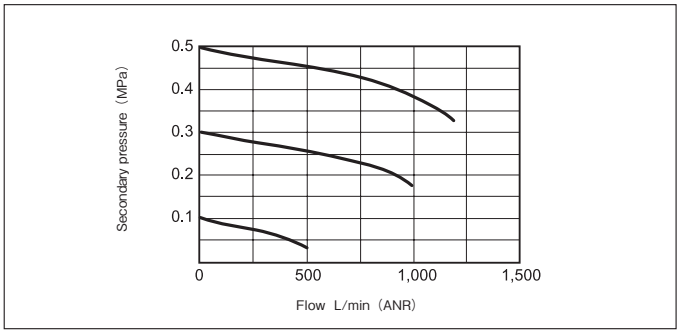

VB7-08-20A・25A

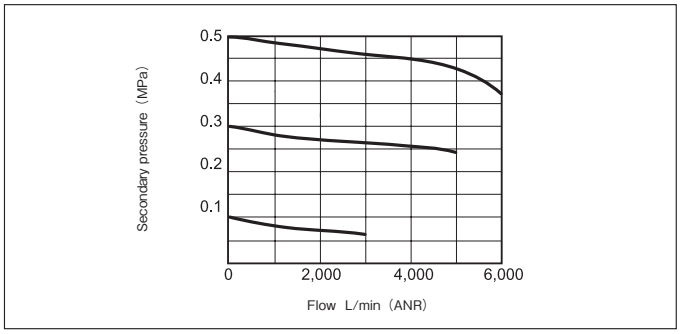

VB3-04-10A・15A

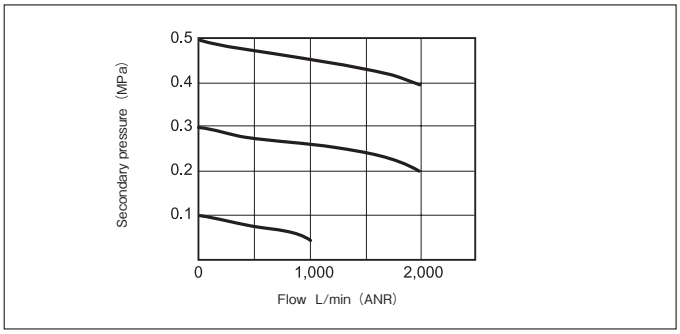

Relief flow characteristics graphs ● pressure conditions —— Primary pressure : 0.7MPa

VB7-03-8A・10A

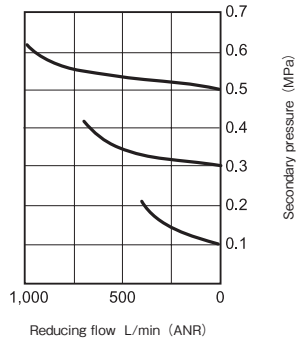

VB7-08-20A・25A

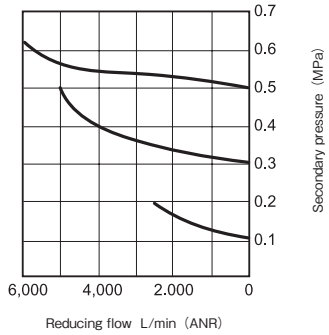

VB7-04-10A・15A

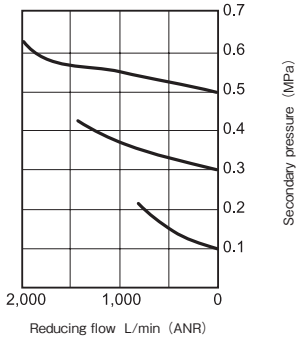

Pressure characteristics graphs ● Initial-setting pressure conditions — Primary pressure : 0.7MPa, Secondary pressure : 0.2MPa,

VB7-03-8A・10A

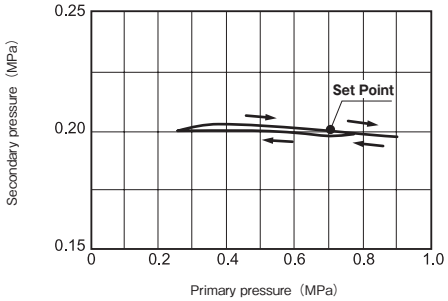

VB7-08-20A・25A

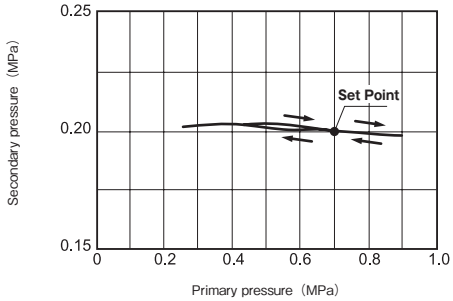

VB7-04-10A・15A

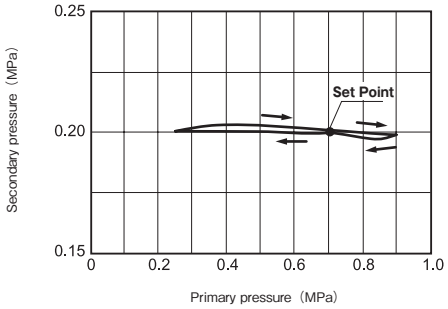

Operating Instructions

1 Installation

- Perform enough air flushing of pipes and piping materials to eliminate dusts and foreign substances completely before connecting to components.
- Install in correct direction as indicated by an arrow mark on the body to make sure correct air flow.
- Do NOT pressurize or close the relief port.
- Place the volime booster vertically in order to minimize the effect of body weight on performance.

2 Fluid

- For air supply to the primary side,filtrate the fluid using an air filter with filtration less than 40μm.

3 Lubrication

- Do not lubricate the volume booster.
- When lubricating downstream components using lubricator in open air,perform the process at secondary side of the volume booster.

4 Bracket

- Bracket is avalable as an option.
- Remove any 3 machine screws from the top of the volume booster and mount the bracket with longer machine screws supplied with the volume booster.

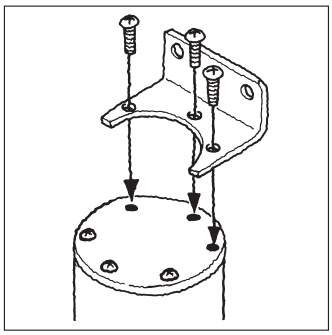

5 Pressure

- Set and adjust the secondary pressure using a pilot-operated regulator.
- Set primary pressure about 0.1 MPa higher than the secondary set pressure.If there is no pressure difference,available flow volume is decreased.

LUBRICATORS

OL2/OL21	Standard type	RC 1/4 ~ 2 1/2

The lubricator is intended for mist-lubrication of controls and peripheral equipment in pneumatic lines,as required,by automatically sending oil in mist from to the pneumatic line.
This extends the services life of the components in the pneumatic line and improves their efficiency.

JIS Symbol

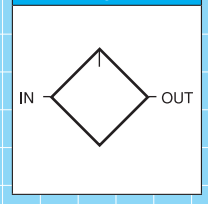

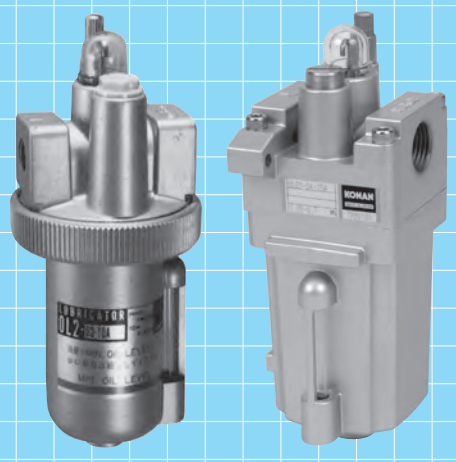

Model Code

When ordering,specify the model as follows:

Standard type

Rc 1/4 ~ 1/2	OL21 ① –04– ② – ⑥
Rc 3/4 ~ 1	OL2 ① –08– ③ – ⑥
Rc 1_1/4 ~ 1_1/2	OL2 ① –14– ④ – ⑥ – ⑦
Rc 2 ~ 2_1/2	OL2 ① –20– ⑤ – ⑥ – ⑦

① Corrosion-resistant
② Port size
③ Port size
④ Port size
⑤ Port size
⑥ Operating temperature range
⑦ Drain valve

❶ Corrosion-resistant

- Portions that are exposed to outside weather conditions are corrosion-resistant coating and the exposed bolts,nuts and brackets are stainless steel.

Standard	No entry
Corrosion-resistant type	S

❷ Port size

Rc 1/4	8A
Rc 3/8	10A
Rc 1/2	15A

❸ Port size

Rc 3/4	20A
Rc 1	25A

❹ Port size

Rc 1_1/4	32A
Rc 1_1/2	40A

❺ Port size

Rc 2	50A
Rc 2_1/2	65A

❻ Operating temperature range

General purpose	5 ~ 60℃	No entry
Heat-resistant	5 ~ 100℃	HT

- For corrosion.freeze resistant type,allow some margin for delivery.

❼ Drain valve

Without	No entry
With	SV

Specifications

Model code	OL21-04			OL2-08		OL2-14		OL2-20	
Port size	8A	10A	15A	20A	25A	32A	40A	50A	65A
	Rc1/4	Rc3/8	Rc1/2	Rc3/4	Rc1	Rc11/4	Rc11/2	Rc2	Rc21/2
Bowl oil capacity	200cm³			250cm³		1500cm³		1500cm³	
Operating pressure	0.05 ~ 0.7MPa								
Proof pressure	1.05MPa								
Spray condition	IN-to-OUT pressure differential to be 0.003MPa or more								
Operating temperature	See Model Code section.								
Mass	0.64kg			0.7kg		7.0kg		7.1kg	

● For specifications other than those listed above,consult us.

Operation

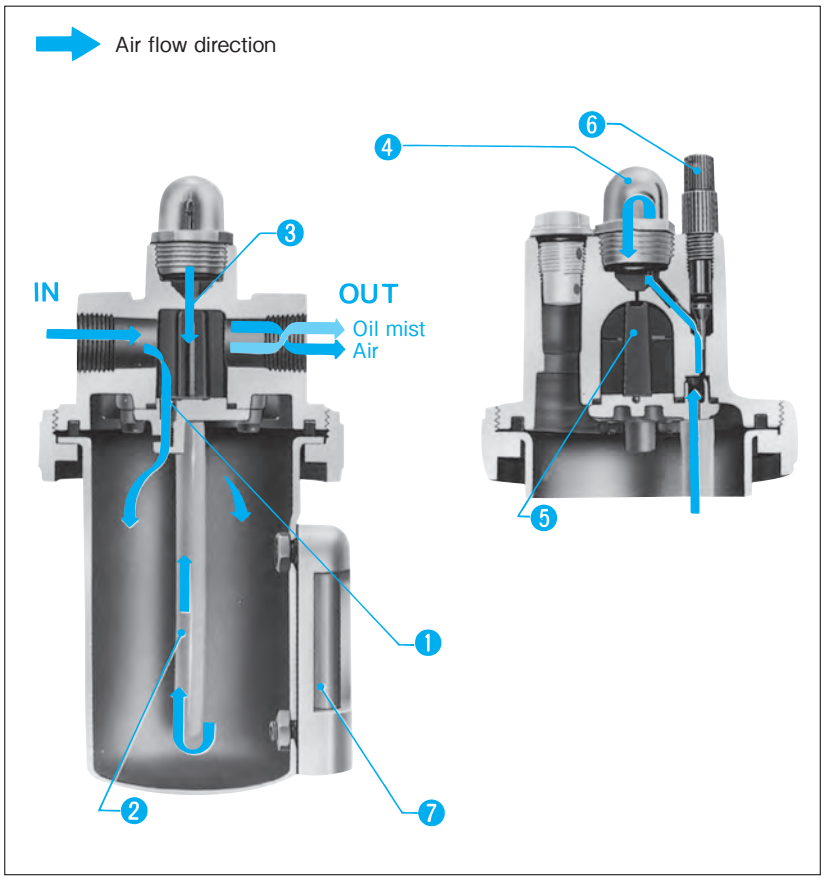

❶ Check valve

Part of the air entering the IN port passes through the check valve and pressurizes the oil in the bowl. When oil is added (filter plug removed) with the oil under pressure,the ball of the check valve is forced against the seat,and air is prevented from entering the bowl.In practice,however,the check valve is not closed completely,and a very small amount of air continues to enter the bowl.This does not hinder lubrication.

❷ Siphon tube

A pressure differential in the sight glass causes oil to pass through the siphon tube to the adjusting screw section.

❸ Oil spray section

Here,oil droplets turn into minute mist particles and are diffused in the air.

❹ Sight glass

As pneumatic pressure enters the IN port,a pressure differential results in the sight glass.Oil sent there through the siphon tube falls in the form of droplets through the drip tube.

❺ Oil quantity adjustment

The rubber plate automatically adjusts the oil quantity if the air flow varies.

❻ Adjusting screw

Turning the adjusting screw counterclacowise increases the amount of oil droplets while tuming it clockwise reduces the quantity.

❼ Side glass

This is used to check the oil level in the bowl.

Outside Dimensions

OL21-04-8A・10A・15A

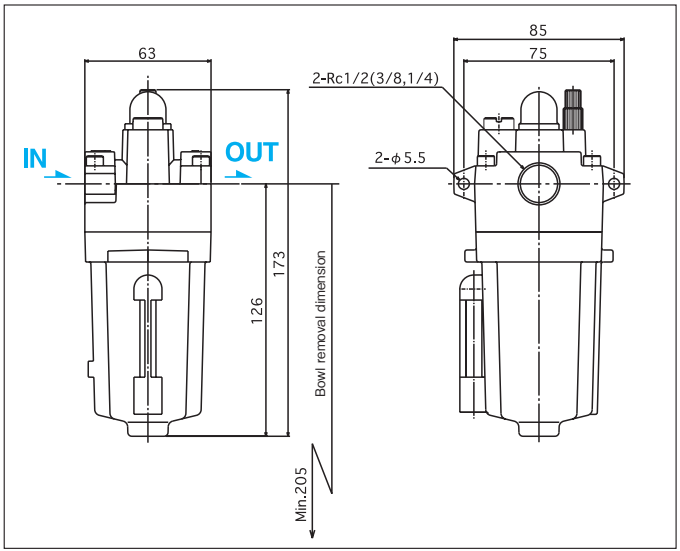

OL2-14-32A・40A

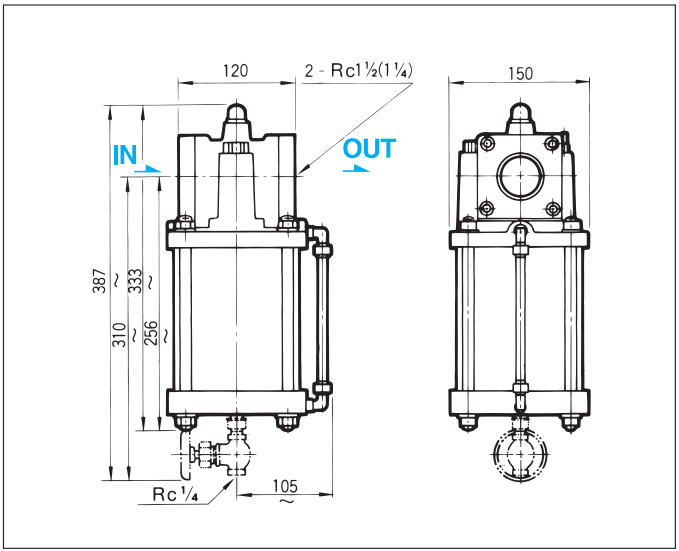

OL2-08-20A・25A

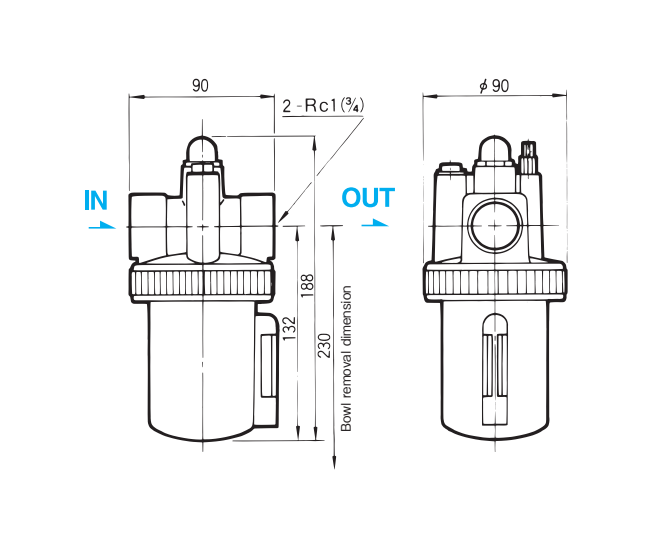

OL2-20-50A・65A

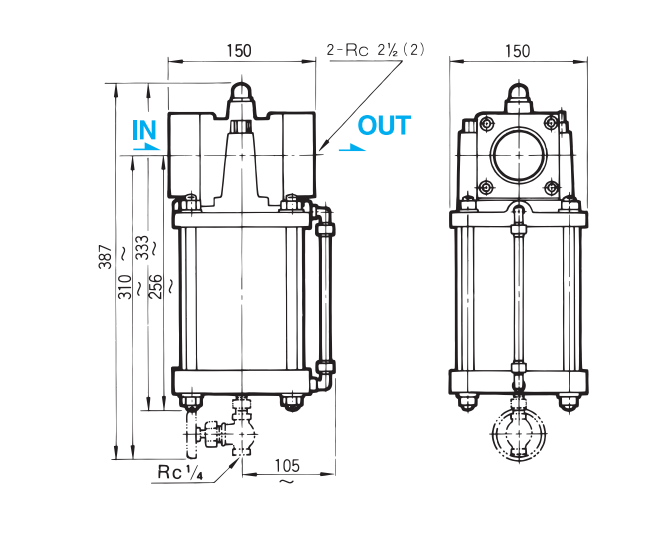

● The drain valve for 32A to 65A size are option parts.

Performance Tables

Flow characteristics graphs

OL21-04-8A

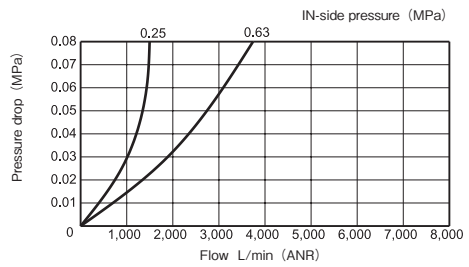

OL2-14-32A

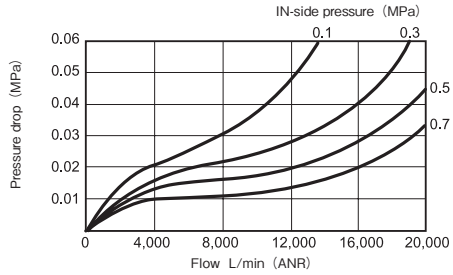

OL21-04-10A

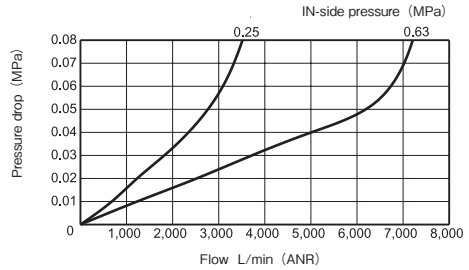

OL2-14-40A

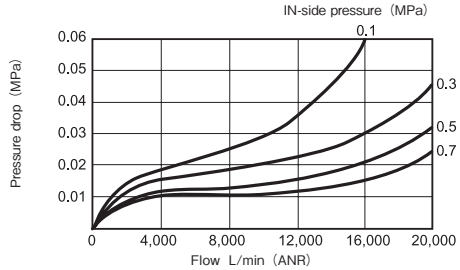

OL21-04-15A

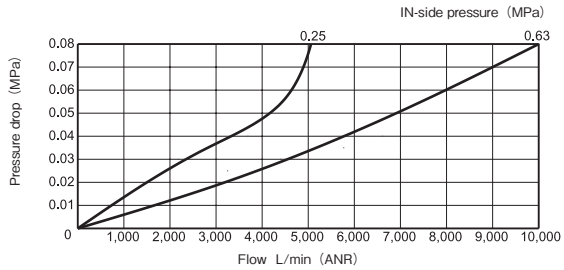

OL2-20-50A

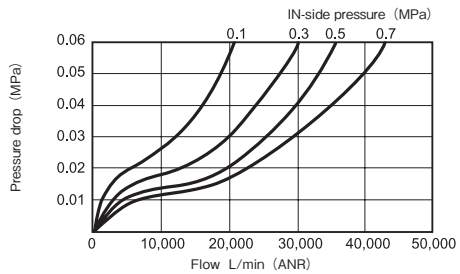

OL2-08-20A

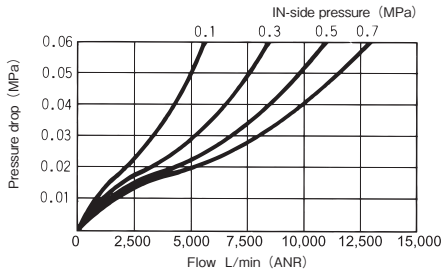

OL2-20-65A

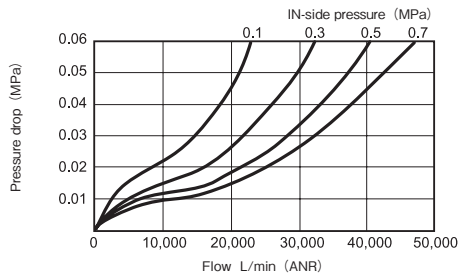

OL2-08-25A

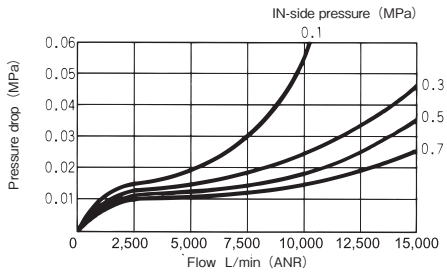

Performance Tables

Min. operating flow oil drop

OL21-04

※ This characteristics are based on the new JIS standard.

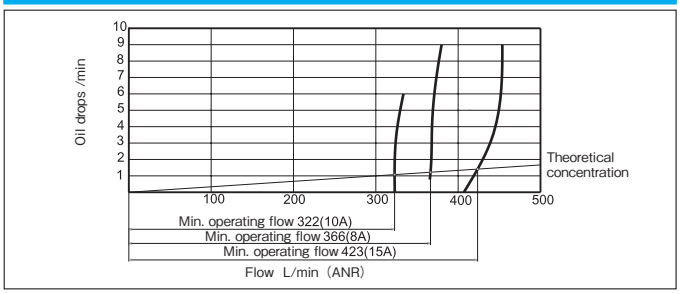

Operating Instructions

1 Installation

- The install of lubricator bowl must be downwards vertically.

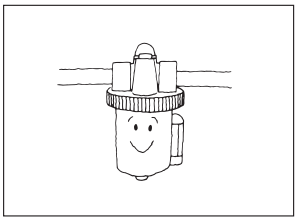

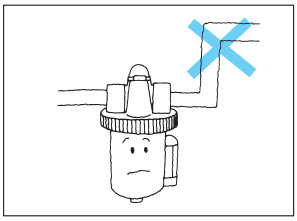

- Install the lubricator as near to the actuator as possible.Avoid placing a rising pipeline between the lubricator and actuator.

- Provide room so that the bowl can be removed for maintenance and checking.

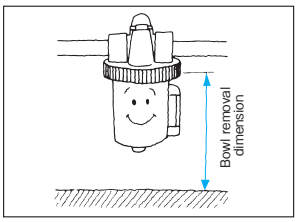

2 Adjusting the quantity of oil droplets

- To increase the quantity,turn the adjusting screw counter-clockwaise.
- To reduce the quantity,turn the adjusting screw clockwise.

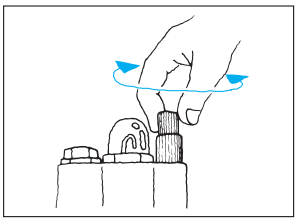

3 Type of lubricator oil

- Use JISK2213 turbine oil with additive,or equivalent of ISO VG32 or 46. (Do not use spindle oil.)

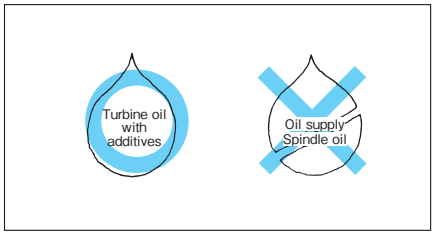

4 Lubrication

- Oil can be added even during operation.
  To feed oil,remove the filler plug and pour oil through the filler port.

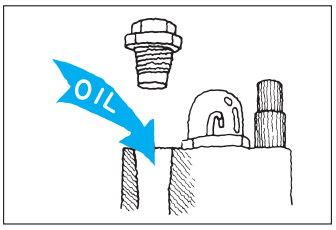

- It is recommended that oil be supplied at regular intervals on the basis of the expected amount of oil consumption,calculated from the frequency of line operations.

Forced spray
MICROMIST LUBRICATORS

MO2	Standard type	RC 1·1¼·1½·2

This is a large capacity lubricator being the most suitable for a centralized lubricating system with many moving parts like air motors and gear chain etc.,requiring a large amount of lublicant.

JIS 記号

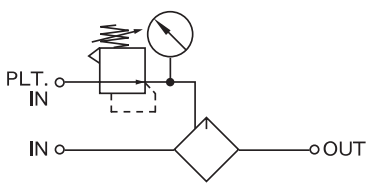

Model Code

When ordering,specify the model as follows:

Standard type

Rc 1	MO2-10 – 25A – ② (Oil discharge stop valve)
Rc 1_1/4 ～ 1_1/2	MO2-14 – ① (Port size) – ② (Oil discharge stop valve)
Rc 2	MO2-20 – 50A – ② (Oil discharge stop valve)

① Port size

Rc1_1/4	32A
Rc1_1/2	40A

② Oil discharge stop valve

Without		No entry
With	Left	L
	Right	R

Specifications

Model code	MO2-10	MO2-14		MO2-20
Port size	25A	32A	40A	50A
	Rc1	Rc1 1/4	Rc1 1/2	Rc2
Effective sectional area	260㎟	500㎟	700㎟	1200㎟
Operating pressure	0.05 ～ 0.7MPa			
Proof pressure	1.05MPa			
Operating temperature	5 ～ 60℃			
Bowl oil capacity	12,000㎤			
Mass	55.0kg			

Outside Dimensions

MO2–10・14・20

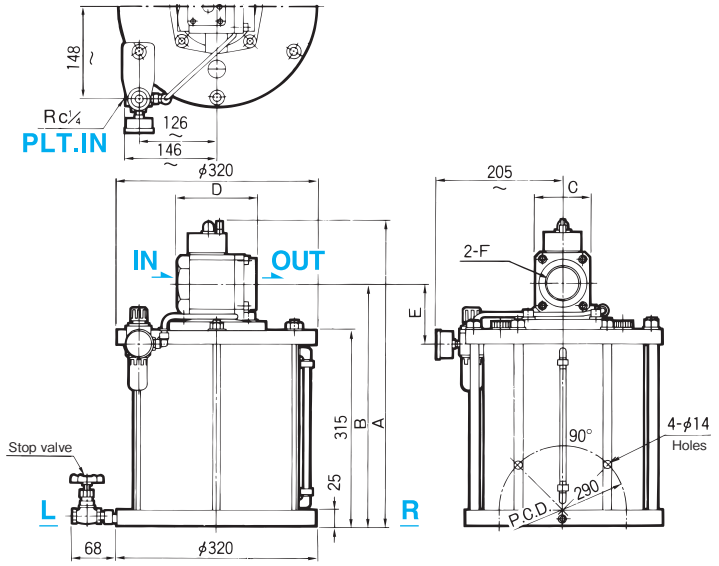

Units : mm

Model code	F	A	B	C	D	E
MO2-10	Rc 1	454	370	60	100	79
MO2-14	Rc1 1/4	473	380	76	112	89
	Rc1 1/2					
MO2-20	Rc 2	492	390	86	125	99

Performance Tables

Flow characteristics graphs

MO2-10-25A

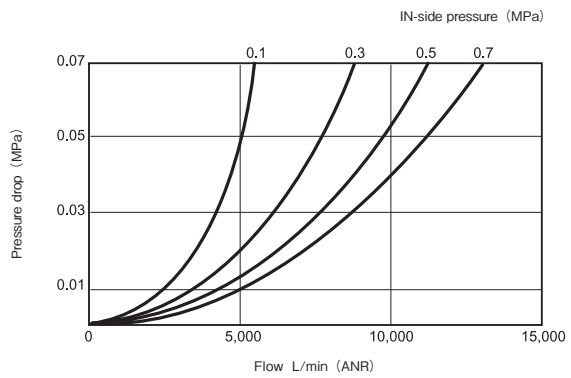

MO2-14-40A

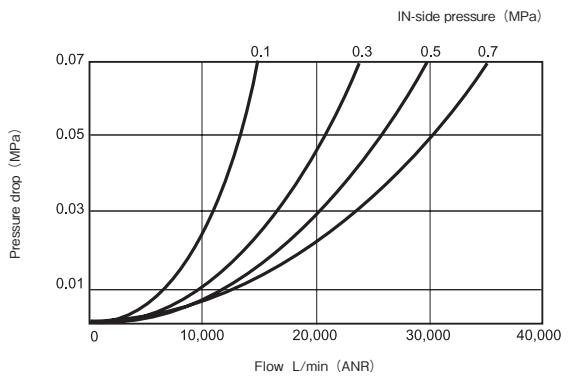

MO2-14-32A

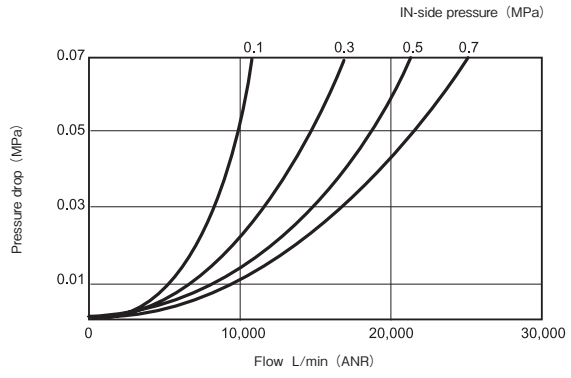

MO2-20-50A

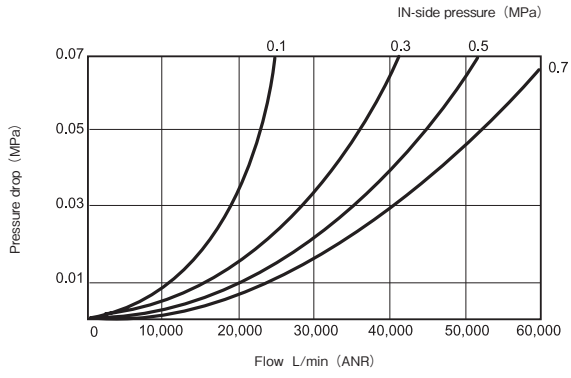

Operating Instructions

1 Installation

- The install of lubricator bowl must be downwards vertically. (FIG.1)

FIG.1 **Orientation**

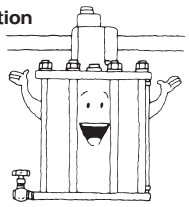

- As shown in FIG.2, the main inlet of micromist lubricator must be connected to regulator outlet and the pilot pressure (PLT.IN) must be tapped off the line between air filter and regulator. (FIG.2)

FIG.2 **Installation**

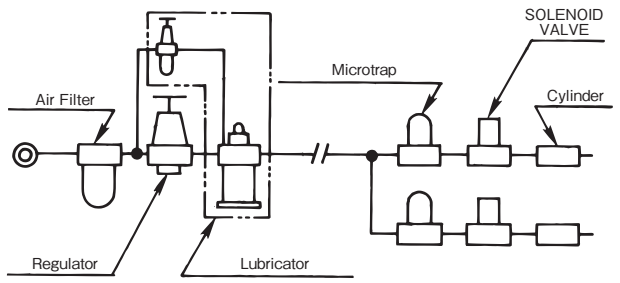

Caution

① If pilot air supplied to micromist lubricator without openning the main outlet of regulator,the upstream regulator may exhaust the air through the relief valve.This is not a mulfunction and you may continue to use the micromist lubricator.

② Consult factory related to MICRO-TRAP. (KONAN MODEL TR1 SERIES)

2 Lubrication

- Be sure to close the main air valve befor attempting to refill any lubrication oil (FIG.3)

FIG.3 **Refill**

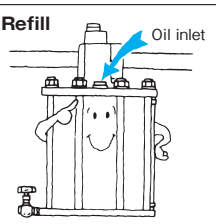

- Use JISK2213 turbine oil with additive or equivalent of ISO VG32 or 46. Do not use spindle oil. (FIG.4)

FIG.4 **Oil**

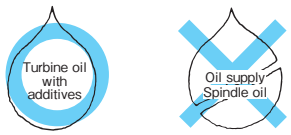

4 Pilot pressure

- Because of the forced spraying by the pilot system,the pilot pressure must be set adequately.
  Pilot pressure = main pipe line pressure + 0.05 ~ 0.1MPa

Because of the design for forced spraying system.
The air flows at a rate of 100NL/min. in the maximum through the Venturi to the outlet when the main pipe pressure is 0.4MPa and the pilot pressure is 0.5MPa.

FRL UNITS

LU2/LU21	Standard type	RC $\frac{1}{4} \sim 2\frac{1}{2}$

This is a three-part air unit comprised of filter,regulator and lubricator that ensures stable operation of peripherals such as cylinders and piston valves in pneumatic lines.

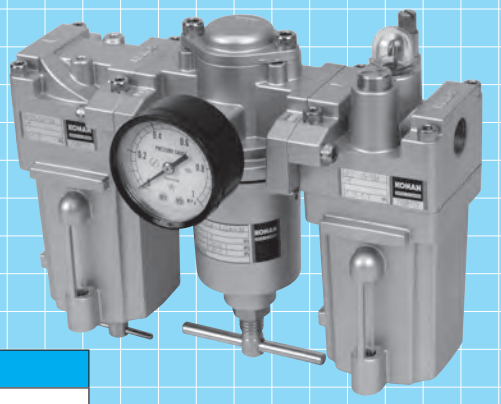

JIS Symbol

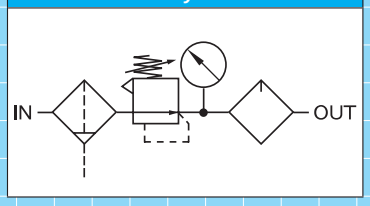

Model Code

When ordering,specify the model as follows:

Standard type

Rc 1/4 ~ 1/2	LU21	1	-04-	2	-	6	-	7	-	8	
		Corrosion-resistant		Port size		Operating temperature range		Filter rating of element		Bracket	
Rc 3/4 ~ 1	LU2	1	-08-	3	-	6	-	7	-	8	
		Corrosion-resistant		Port size		Operating temperature range		Filter rating of element		Bracket	
Rc 1_1/4 ~ 1_1/2	LU2	1	-14-	4	-	7	-	9	-	10	
		Corrosion-resistant		Port size		Filter rating of element		Drain valve		Level gauge	
Rc 2 ~ 2_1/2	LU2	1	-20-	5	-	9					
		Corrosion-resistant		Port size		Drain valve					

1 Corrosion-resistant

- Portions that are exposed to outside weather conditions are corrosion-resistant coating and the exposed bolts,nuts and brackets are stainless steel.

Standard	No entry
Corrosion-resistant type	S

2 Port size

Rc 1/4	8A
Rc 3/8	10A
Rc 1/2	15A

3 Port size

Rc 3/4	20A
Rc 1	25A

4 Port size

Rc 1_1/4	32A
Rc 1_1/2	40A

5 Port size

Rc 2	50A
Rc 2_1/2	65A

6 Operating temperature range

General purpose	5 ~ 60℃	No entry
Heat-resistant	5 ~ 100℃	HT

- For the heat resistant type,allow some margin for delivery.

7 Filter rating of element

General purpose	40 μm	No entry
Instrumentation	5 μm	5

8 Bracket

Without	No entry
With	BR

- Bracket is not mounted but appended with regulators.

9 Drain valve

Without	No entry
With	SV

10 Level gauge

Without	No entry
Flont side	F
Back side	B

Specifications

Standard type

Model code		LU21-04			LU2-08	
Port size		8A	10A	15A	20A	25A
		Rc1/4	Rc3/8	Rc1/2	Rc3/4	Rc1
Operating pressure	Primary side (IN)	Max.1.0MPa				
	Secondary side (OUT)	0.05 ~ 0.7MPa				
Proof pressure		Primary pressure : 1.5MPa / Secondary pressure : 0.7MPa				
Operating temperature		See Model Code section.				
Components	Air filter	AF21-04			AF2-08	
	Regulator	RV21-04			RV2-08	
	Lubricator	OL21-04			OL2-08	
	Pressure gauge	50mm dia (Scale : 0 to 1MPa)				
Mass		2.1kg			4.0kg	

- Above values of mass exclude weight of mounting bracket.
- For specifications other than those listed above,please contact us.
- Air filter rating is 40 microns for all models.

Corrosion-resistant type

Portions that are exposed to outside weather conditions are corrosion-resistant coating and the exposed bolts, nuts and brackets are stainless steel.

Model code		LU21S-04			LU2S-08	
Port size		8A	10A	15A	20A	25A
		Rc1/4	Rc3/8	Rc1/2	Rc3/4	Rc1
Operating pressure	Primary side (IN)	Max.1.0MPa				
	Secondary side (OUT)	0.05 ~ 0.7MPa				
Proof pressure		Primary pressure : 1.5MPa / Secondary pressure : 0.7MPa				
Operating temperature		See Model Code section.				
Components	Air filter	AF21S-04			AF2S-08	
	Regulator	RV21S-04			RV2S-08	
	Lubricator	OL21S-04			OL2S-08	
	Pressure gauge	50mm dia (Scale : 0 to 1MPa) Corrosion-resistant type				
Mass		2.1kg			4.0kg	

- Above values of mass exclude weight of mounting bracket.
- For specifications other than those listed above,contact us.
- Air filter rating is 40 microns for all models.

Specifications

Standard type

Model code		LU2-14		LU2-20	
Port size		32A	40A	50A	65A
		Rc1_1/4	Rc1_1/2	Rc2	Rc2_1/2
Operating pressure	Primary side (IN)	Max.1.0MPa			
	Secondary side (OUT)	0.05 ~ 0.7MPa			
Proof pressure		Primary pressure : 1.5MPa / Secondary pressure : 0.7MPa			
Operating temperature		See Model Code section.			
Components	Air filter	AF2		AF2	
	Regulator	RV2-14		RV2-20	
	Lubricator	OL2-14		OL2-20	
	Pressure gauge	50mm dia (Scale : 0 to 1MPa)			
Mass		28kg		45kg	

- Above values of mass exclude weight of mounting bracket.
- For specifications other than those listed above,please contact us.
- Air filter rating is 40 microns for all models.

Corrosion-resistant type

Portions that are exposed to outside weather conditions are corrosion-resistant coating and the exposed bolts, nuts and brackets are stainless steel.

Model code		LU2S-14		LU2S-20	
Port size		32A	40A	50A	65A
		Rc1_1/4	Rc1_1/2	Rc2	Rc2_1/2
Operating pressure	Primary side (IN)	Max.1.0MPa			
	Secondary side (OUT)	0.05 ~ 0.7MPa			
Proof pressure		Primary pressure : 1.5MPa / Secondary pressure : 0.7MPa			
Operating temperature		See Model Code section.			
Components	Air filter	AF2S		AF2S	
	Regulator	RV2S-14		RV2S-20	
	Lubricator	OL2S-14		OL2S-20	
	Pressure gauge	50mm dia (Scale : 0 to 1MPa) Corrosion-resistant type			
Mass		28kg		45kg	

- Above values of mass exclude weight of mounting bracket.
- For specifications other than those listed above,contact us.
- Air filter rating is 40 microns for all models.

Outside Dimensions

LU21-04

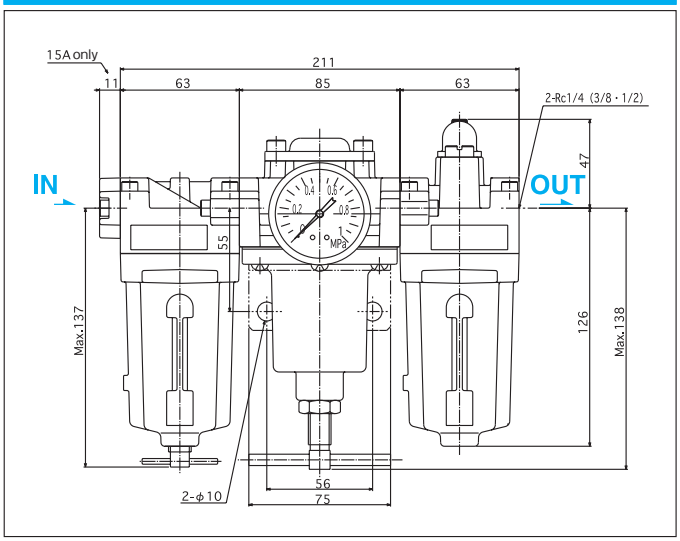

LU2-14

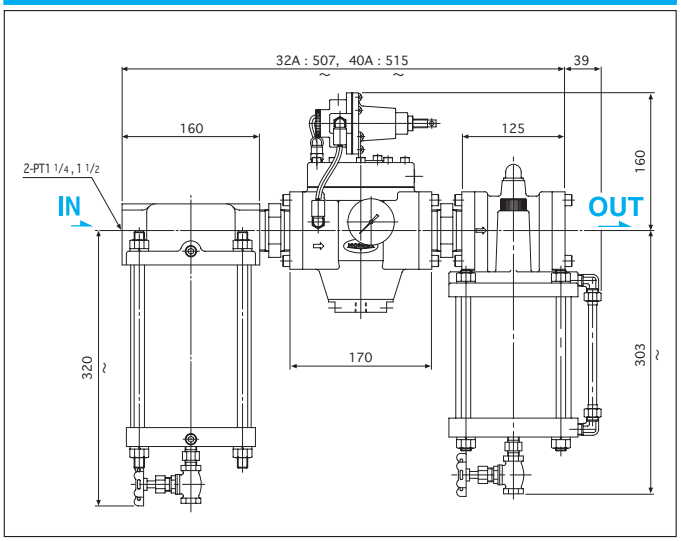

LU2-08

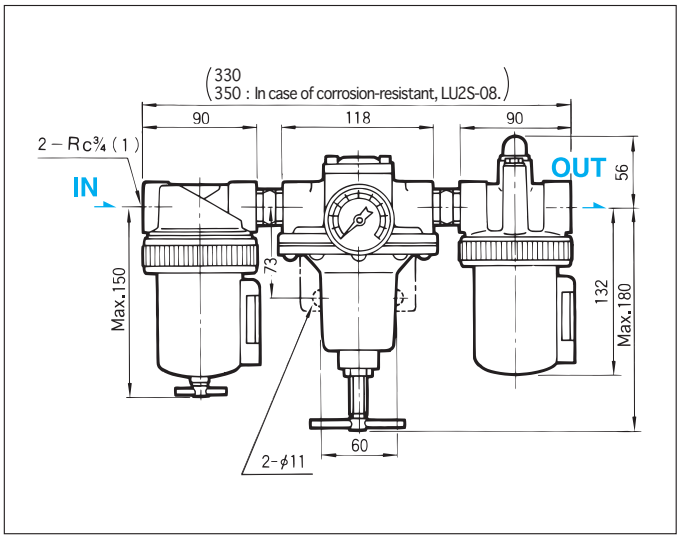

LU2-20-50A

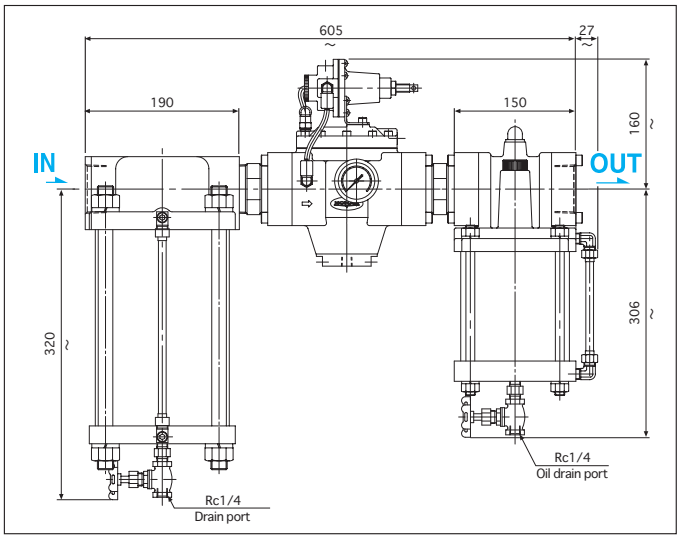

LU2-20-65A

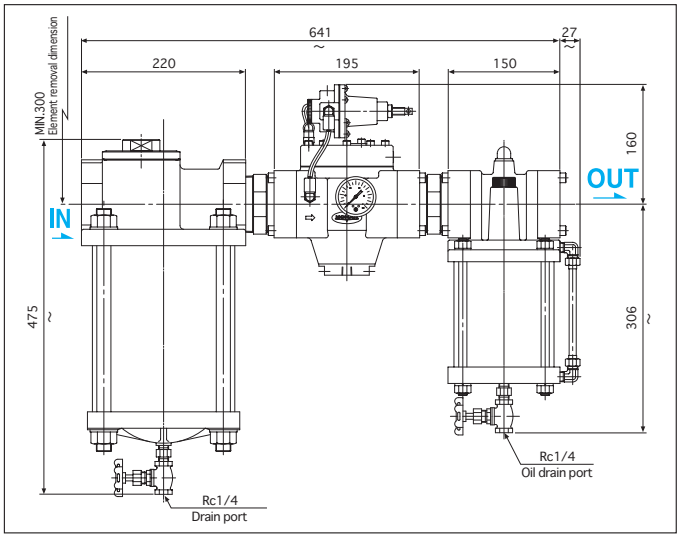

Performance Tables

Flow characteristics graphs

LU21-04-10A

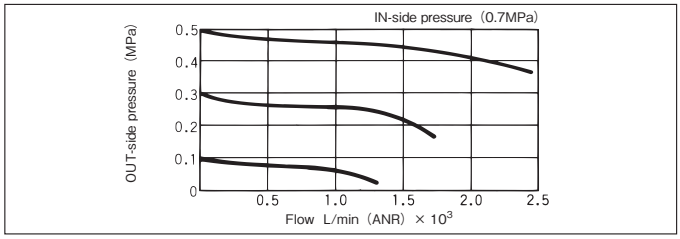

LU2-08-20A

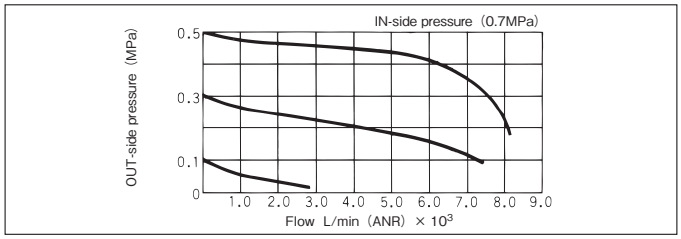

LU21-04-15A

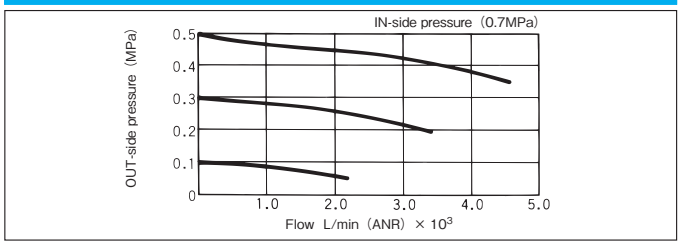

LU2-08-25A

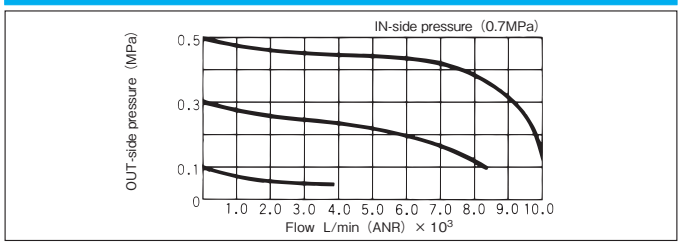

※ LU2－14－32A ／ LU2－14－40A：For further details, please do not hesitate to contact us.
※ LU2－20－50A ／ LU2－20－65A：For further details, please do not hesitate to contact us.

Operating Instructions

1 Installation

- Install the FRL unit as far from the air source as possible. Avoid the use of a rise pipeline between the FRL unit and the actuator.

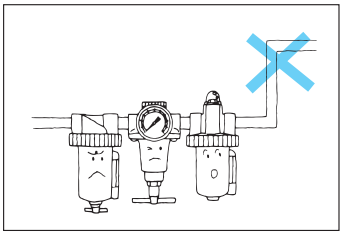

- For a circuit in which the flow of air is reversed,flowing from the secondary to the primary side,install a check valve in parallel.
- Install the FRL vertically so that the bowls are located downwards.

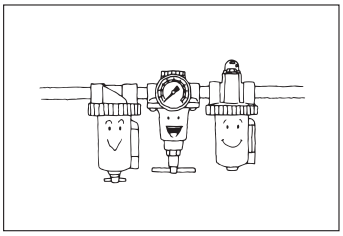

- Leave space so that the bowls can be removed for maintenance and checking.

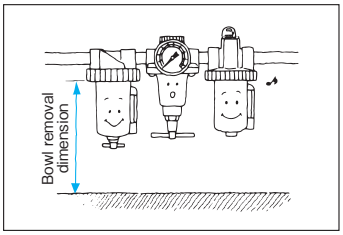

2 Discharging drain fluid

- Turn the handle of air filter drain cock counterclockwise. The pressure in the bowl will discharge the drain fluid.

3 Bracket

- The FRL unit mounting bracket is available as an option.To install the bracket,refer to the figure below.

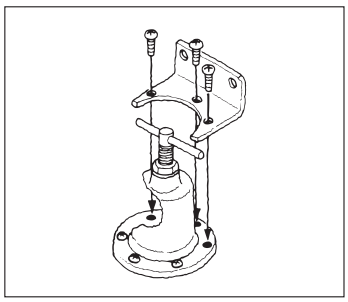

- Remove three machine screws from the regulator only,which is located in the middle. Next,mount the bracket using the three longer machine screws supplied with the bracket.

4 Adjusting the quantity of oil droplets

- Turning the adjusting screw on the lubricator counterclockwise in-creases the quantity of droplets.
- Turning the adjusting screw clockwise reduces it.

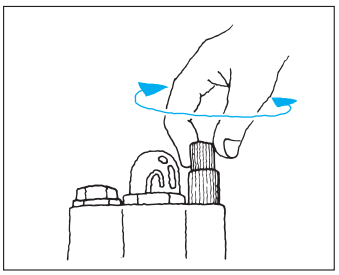

5 Type of lubricator oil

- Recommended oils are JIS K2213 turbine oil with additive or equivalent of ISO VG 32 or 46.Do not use spindle oil.

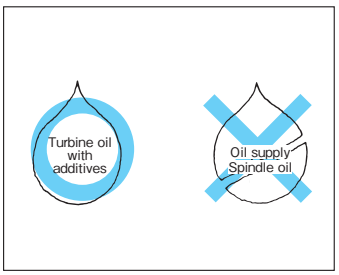

6 Lubrication

- Oil can be added to the lubricator even during operation.
- To add oil to the lubricator,be sure to use the filler port,opened by removing the filler plug.

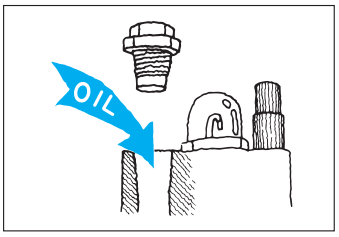

- It is recommended that oil be added at regular intervals on the basis of the expected oil consumption,calculated from the irequency of line operations.

FR UNITS

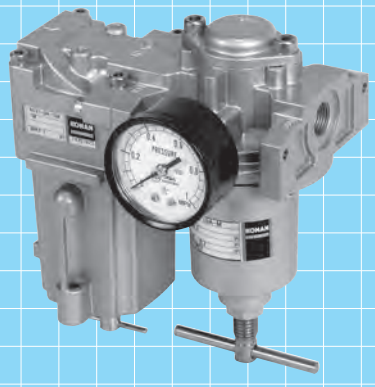

Compatible with a lubrication-oil-free pneumatic line and three-piece set of air units without lubricator will be offered.

JIS Symbol	
Rc3/8 ~ 1	Rc1_1/4 ~ 2_1/2
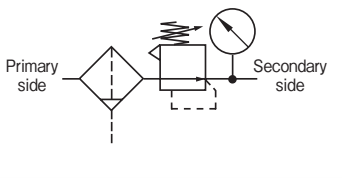	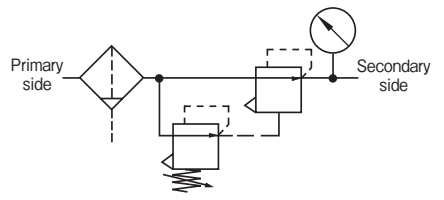

Model Code

When ordering,specify the model as follows:

Standard type

Rc 3/8 ~ 1/2	820 – 4395 –	① Port size	– ⑥ Operating temperature range	– ⑦ Filter rating of element	– ⑧ Bracket
Rc 3/4 ~ 1	820 – 4397 –	② Port size	– ⑥ Operating temperature range	– ⑦ Filter rating of element	– ⑧ Bracket
Rc 1_1/4 ~ 1_1/2	820 – 3184 –	③ Port size	– ⑦ Filter rating of element	– ⑧ Bracket	
Rc 2	820 – 3186 –	④ Port size	– ⑦ Filter rating of element	– ⑧ Bracket	
Rc 2_1/2	820 – 3188 –	⑤ Port size	– ⑧ Bracket		

Corrosion-resistant type

Rc 3/8 ~ 1/2	820 – 4396 –	① Port size	– ⑥ Operating temperature range	– ⑦ Filter rating of element	– ⑧ Bracket
Rc 3/4 ~ 1	820 – 4398 –	② Port size	– ⑥ Operating temperature range	– ⑦ Filter rating of element	– ⑧ Bracket
Rc 1_1/4 ~ 1_1/2	820 – 3185 –	③ Port size	– ⑦ Filter rating of element	– ⑧ Bracket	
Rc 2	820 – 3187 –	④ Port size	– ⑦ Filter rating of element	– ⑧ Bracket	
Rc 2_1/2	820 – 3189 –	⑤ Port size	– ⑧ Bracket		

1 Port size

Rc 3/8	10A
Rc 1/2	15A

2 Port size

Rc 3/4	20A
Rc 1	25A

3 Port size

Rc 1_1/4	32A
Rc 1_1/2	40A

4 Port size

Rc 2	50A

5 Port size

Rc 2_1/2	65A

6 Operating temperature range

General purpose	5 ~ 60℃	No entry
Heat-resistant	5 ~ 100℃	HT

- For corrosion.freeze resistant type,allow some margin for delivery.
- In operating temperatures of 5℃ or less, provide adequate measures against freezing.

7 Filter rating of element

General purpose	40 μm	No entry
Instrumentation	5 μm	5

8 Bracket

Without	No entry
With	BR

- Bracket is not mounted but appended with regulators.

Specifications

Standard type

Model code		820 − 4395		820 − 4397	
Port size		10A	15A	20A	25A
		Rc3/8	Rc1/2	Rc3/4	Rc1
Operating pressure	Primary side (IN)	Max.1.0MPa			
	Secondary side (OUT)	0.05 ~ 0.7MPa			
Proof pressure		Primary pressure : 1.5MPa / Secondary pressure : 0.7MPa			
Components	Air filter	AF21-04		AF2-08	
	Regulator	RV21-04		RV2-08	
	Pressure gauge	50mm dia (Scale : 0 to 1MPa)			

Corrosion-resistant type

Portions that are exposed to outside weather conditions are corrosion-resistant coating and the exposed bolts, nuts and brackets are stainless steel.

Model code		820 − 4396		820 − 4398	
Port size		10A	15A	20A	25A
		Rc3/8	Rc1/2	Rc3/4	Rc1
Operating pressure	Primary side (IN)	Max.1.0MPa			
	Secondary side (OUT)	0.05 ~ 0.7MPa			
Proof pressure		Primary pressure : 1.5MPa / Secondary pressure : 0.7MPa			
Components	Air filter	AF21S-04		AF2S-08	
	Regulator	RV21S-04		RV2S-08	
	Pressure gauge	50mm dia (Scale : 0 to 1MPa) Corrosion-resistant type			

Specifications

Standard type

Model code		820 − 3184		820 − 3186	820 − 3188
Port size		32A	40A	50A	65A
		Rc1_1/4	Rc1_1/2	Rc2	Rc2_1/2
Operating pressure	Primary side (IN)	Max.1.0MPa			
	Secondary side (OUT)	0.05 ～ 0.7MPa			
Proof pressure		Primary pressure : 1.5MPa/ Secondary pressure : 0.7MPa			
Components	Air filter	AF2		AF2	
	Regulator	RV2-14		RV2-20	
	Pressure gauge	50mm dia（Scale : 0 to 1MPa）			

Corrosion-resistant type

Portions that are exposed to outside weather conditions are corrosion-resistant coating and the exposed bolts, nuts and brackets are stainless steel.

Model code		820 − 3185		820 − 3187	820 − 3189
Port size		32A	40A	50A	65A
		Rc1_1/4	Rc1_1/2	Rc2	Rc2_1/2
Operating pressure	Primary side (IN)	Max.1.0MPa			
	Secondary side (OUT)	0.05 ～ 0.7MPa			
Proof pressure		Primary pressure : 1.5MPa / Secondary pressure : 0.7MPa			
Components	Air filter	AF2S		AF2S	
	Regulator	RV2S-14		RV2S-20	
	Pressure gauge	50mm dia（Scale : 0 to 1MPa） Corrosion-resistant type			

Outside Dimensions

Rc1/4 ~ 1/2

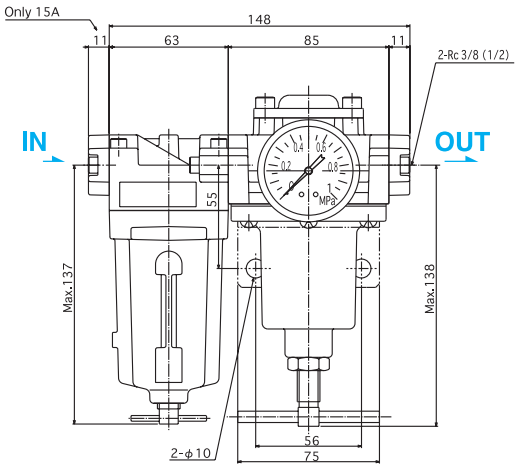

Rc1_1/4 ~ 1_1/2

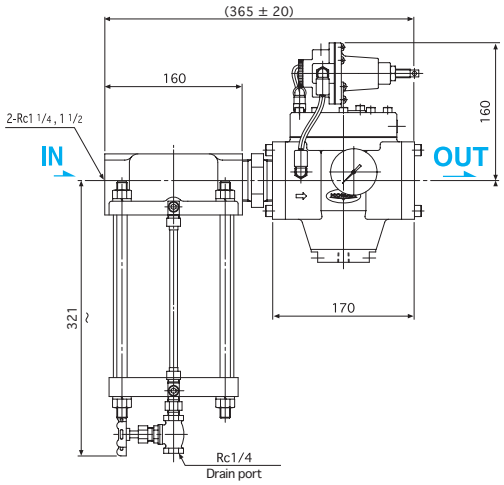

Rc3/4 ~ 1

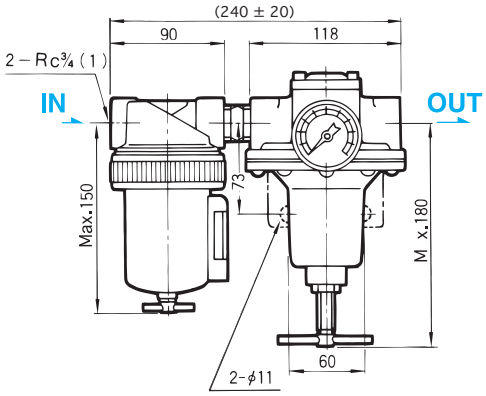

Rc2

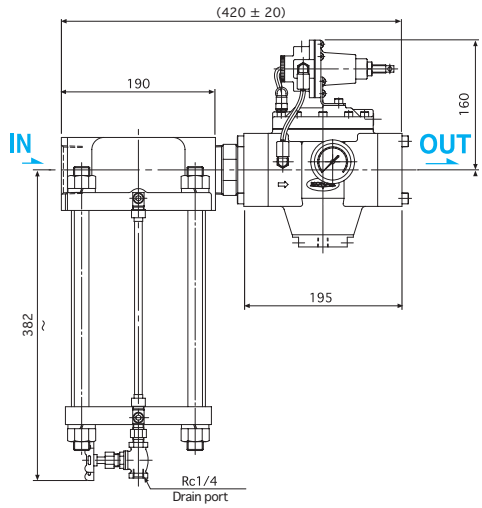

Rc2_1/2

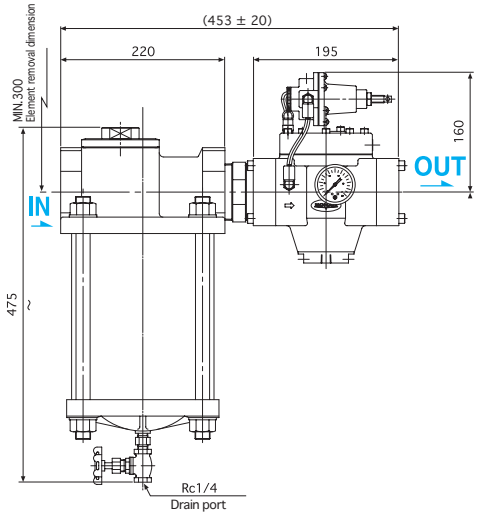

Reducing valve with filter

The FR unit is a compound line component into which an air filter and a regulator are integrated.

ARU2/ARU3A/FR21	Standard type	RC 1/8 ~ 1/2
FR21P	Type mounted in the control box	RC 1/4 ~ 1/2
FR5	Instrumentation type	RC 1/4 ~ 3/8

JIS Symbol

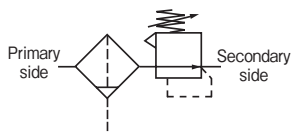

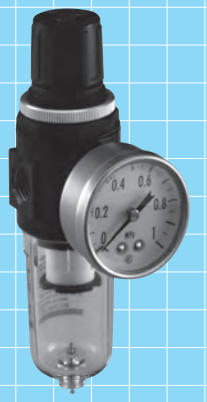

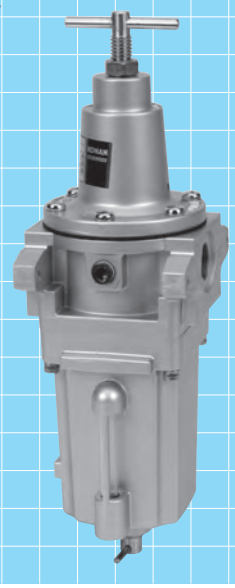

Model Code

When ordering,specify the model as follows:

Standard type

Rc 1/8 ~ 1/4

ARU2 –02– ② – ⑧ – ⑨

- ② Port size
- ⑧ Pressure gauge
- ⑨ Bracket

Rc 1/4 ~ 3/8

ARU3A ① –03 – ③ – ⑤ – ⑦ – ⑧ – ⑨

- ① Corrosion-resistant
- ③ Port size
- ⑤ Operating temperature range
- ⑦ Filter rating of element
- ⑧ Pressure gauge
- ⑨ Bracket

Rc 1/4 ~ 1/2

FR21 ① –04 – ④ – ⑤ – ⑦ – ⑧ – ⑨

- ① Corrosion-resistant
- ④ Port size
- ⑤ Operating temperature range
- ⑦ Filter rating of element
- ⑧ Pressure gauge
- ⑨ Bracket

※ In case of FR21S-04- ④ -HT- ⑦ - ⑧ - ⑨ or FR21S-04- ④ -LT- ⑦ - ⑧ - ⑨
Pressure gauge is made by stainless steel. The code is"GS".

Type mounted in the control box

The drain discharge department have not a drain cook, and have a screw of Rc1/8.

Rc 3/8 ~ 1/2

FR21P ① – 04 – ④ – ⑤ – ⑦ – ⑧ – ⑨

- ① Corrosion-resistant
- ④ Port size
- ⑤ Operating temperature range
- ⑦ Filter rating of element
- ⑧ Pressure gauge
- ⑨ Bracket

※ In case of FR21PS-04- ④ -HT- ⑦ - ⑧ or FR21PS-04- ④ -LT- ⑦ - ⑧
Pressure gauge is made by stainless steel. The code is"GS".

Instrumentation type

Rc 1/4 ~ 3/8

FR5 ① – 02 – ③ – ⑥ – ⑧ – ⑨

- ① Corrosion-resistant
- ③ Port size
- ⑥ Operating temperature range
- ⑧ Pressure gauge
- ⑨ Bracket

※ In case of FR5S-02- ③ -HT-G- ⑨
Pressure gauge is special specifications. The code is"GS".

❶ Corrosion-resistant

- Portions that are exposed to outside weather conditions are corrosion-resistant coating and the exposed bolts,nuts and brackets are stainless steel.

Standard	No entry
Corrosion-resistant type	S

❷ Port size

Rc 1/8	6A
Rc 1/4	8A

❸ Port size

Rc 1/4	8A
Rc 3/8	10A

❹ Port size

Rc 3/8	10A
Rc 1/2	15A

❺ Operating temperature range

General purpose	− 20 ~ 60℃	No entry
Heat-resistant	5 ~ 100℃	HT
Freeze-resistant	− 40 ~ 45℃	LT

- For corrosion.freeze resistant type,allow some margin for delivery.
- In operating temperatures of 5℃ or less, provide adequate measures against freezing.

❻ Operating temperature range

General purpose	− 20 ~ 60℃	No entry
Heat-resistant	5 ~ 100℃	HT

- For corrosion.freeze resistant type,allow some margin for delivery.
- In operating temperatures of 5℃ or less, provide adequate measures against freezing.

❼ Filter rating of element

General purpose	40 μm	No entry
Instrumentation	5 μm	5

- (for ARU2/FR5),note that a filter rating of 5 microns only is available.

❽ Pressure gauge

Without	No entry
With	G

- Pressure gauge sizes :
  50mm dia. (for ARU3A)
  40mm dia. (Others)
  Scale : 0 ~ 0.2MPa (for FR5)
  0 ~ 1.0MPa (Others)
- Pressure gauge is not mounted but appended with regulators.

❾ Bracket

Without	No entry
With	BR

- Bracket is not mounted but appended with regulators.

Specifications

Model code	Standard type	ARU2 – 02				ARU3A – 03		FR21 – 04	
	In the control box							FR21P – 04	
	Instrumentation type			FR5 – 02					
Port size		6A	8A	8A	10A	8A	10A	10A	15A
		Rc1/8	Rc1/4	Rc1/4	Rc3/8	Rc1/4	Rc3/8	Rc3/8	Rc1/2
Operating pressure	Primary side (IN)	Max. 1.0MPa							
	Secondary side (OUT)	0.05 ~ 0.7MPa		0.02 ~ 0.2MPa		0.05 ~ 0.7MPa			
Proof pressure		1.5MPa							
Operating pressure		– 20 ~ 60℃		– 20 ~ 60℃		See Model Code section.			
Filter rating of element		5μm		5μm		See Model Code section.			
Mass		0.26kg		1kg		0.7kg		0.88kg	

- Above values of mass exclude weight of mounting bracket.
- For specifications other than those listed above,please contact us.

Operation

Standard type

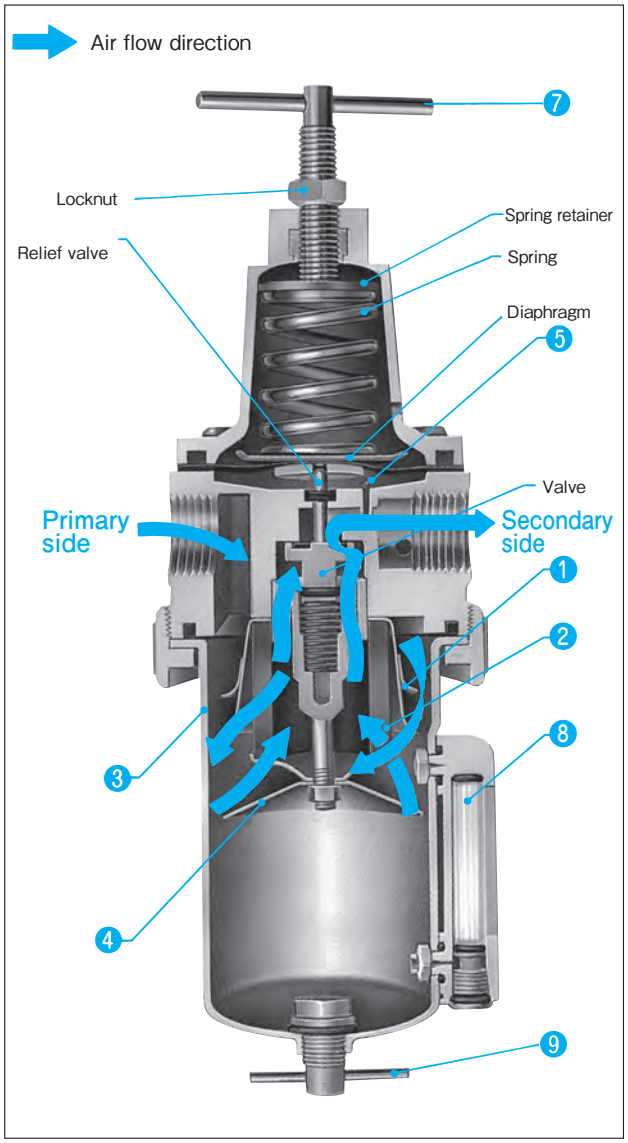

1 Deflector

- Turns air from the primary side into a rotating air flow and separates moisture from the air by centrifugation.

2 Filter element

- Finally filters out lightweight dirt and dust,foreign particles,etc.that cannot be separated from the air by certrifugation.

3 Bowl

- The drain separated by centrifugation runs down the internal wall of the bowl and collects at the bottom.

4 Baffle plate

- Prevents the drain in the bowl from re-entering the air.

5 Diaphragm chamber

- Air pressure from the primary side enters the diaphragm chamber at the same time that it does the secondary side through the filter. The diaphragm is forced up until the pressure in the diaphragm chamber is equal to th spring force.The valve is then closed.
- As the pressure in the secondary side drops,the valve is opened and the primary-side air pressure is furnished to the secondary side again.

6 Relief valve

- When the handle is turned counterclockwaise to lower the set pressure,the spring force weakens compared with the pressure in the diaphragm chamber.This forces the diaphragm up and opens the relief valve,thus releasing the air pressure in the secondary side to the atmosphere until that pressure is equal to the spring force.

7 Handle (adjusting screw)

- To lower the set pressure,turn the handle counterclockwise.
- Turning the handle clockwise causes the adjusting screw tip to force the spring retainer down,thus compressing the spring.
  This opens the valve,and the air pressure entering the primary side flows to the secondary side.

8 Side glass

- Used to check the accumulating drain fluid quantity.

9 Drain cock

- Turning the handle of this cock allows the drain fluid to be discharged.

Outside Dimensions

Standard type

ARU2-02-06・8A

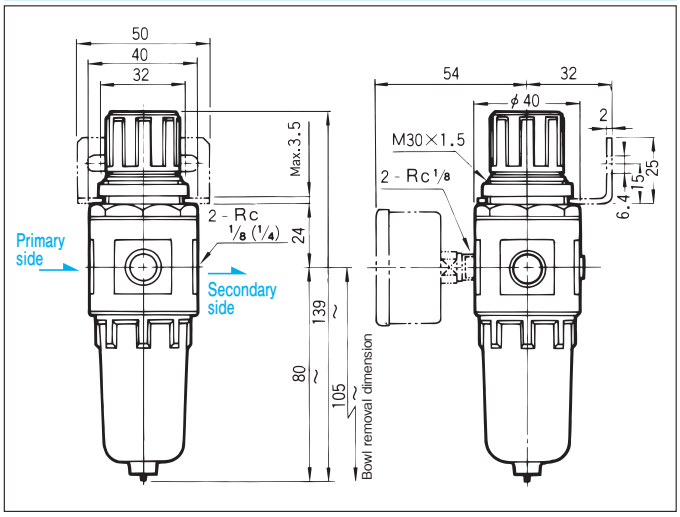

ARU3A-03-8A・10A

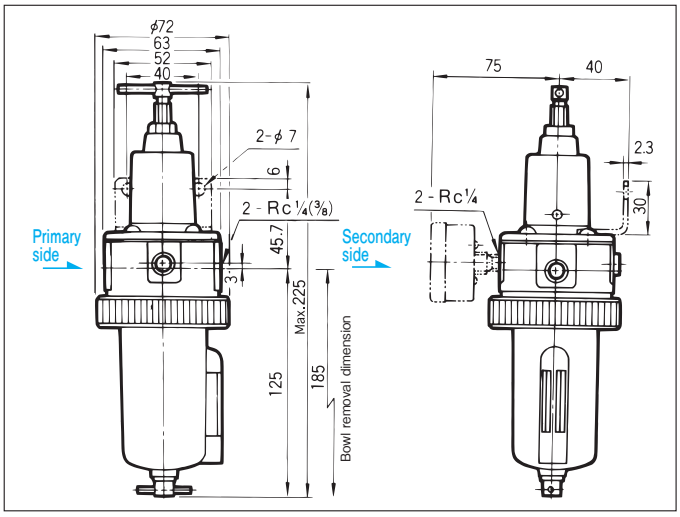

FR21-04-10A・15A

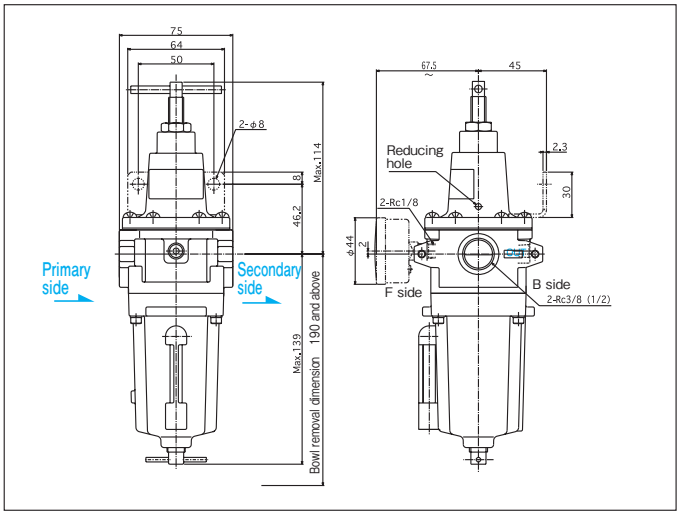

Instrumentation type

FR5-02-8A・10A

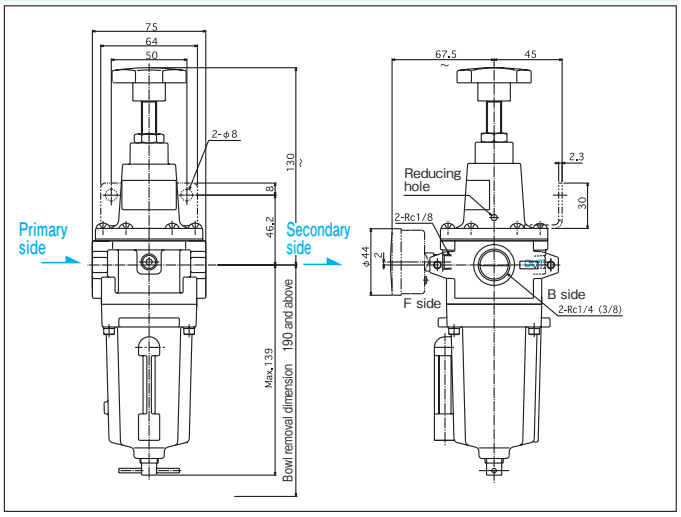

Type mounted in the control box

FR21P-04-10A・15A

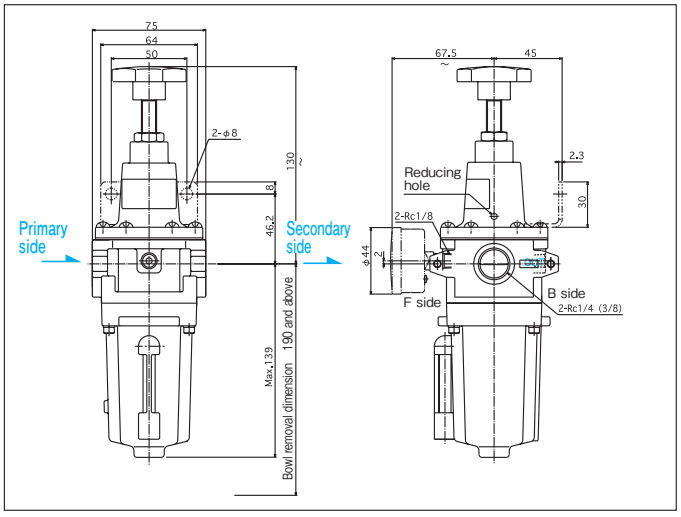

Performance Tables

Flow characteristics graphs

Standard and Panel-mount type

ARU2-02-6A・8A

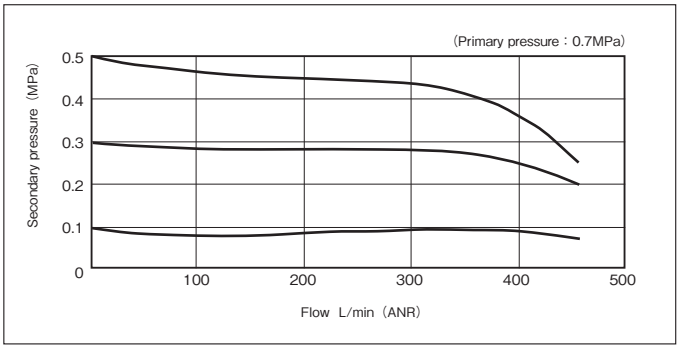

ARU3A-03-8A

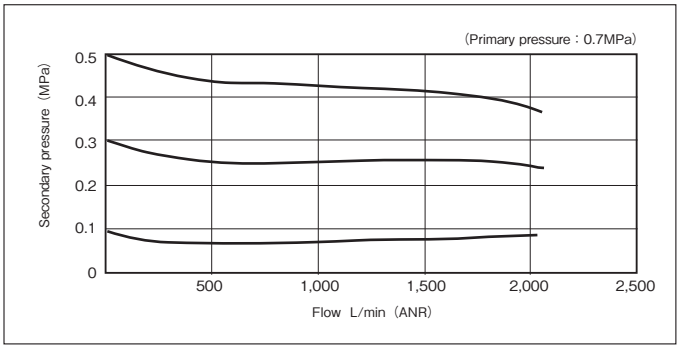

ARU3A-03-10A

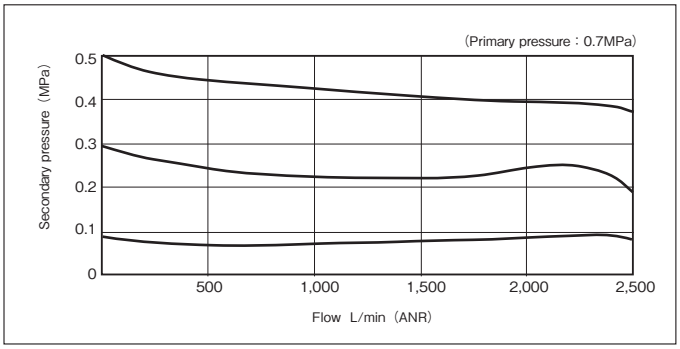

Instrumentation type

FR5-02-8A

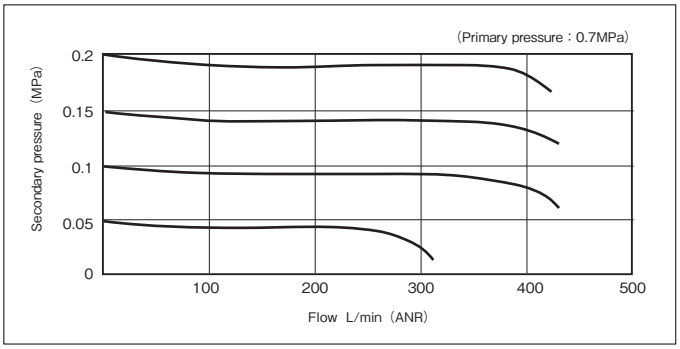

FR21-04-10A

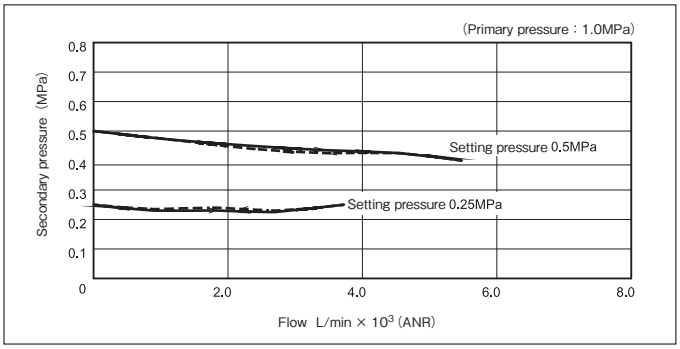

FR5-02-10A

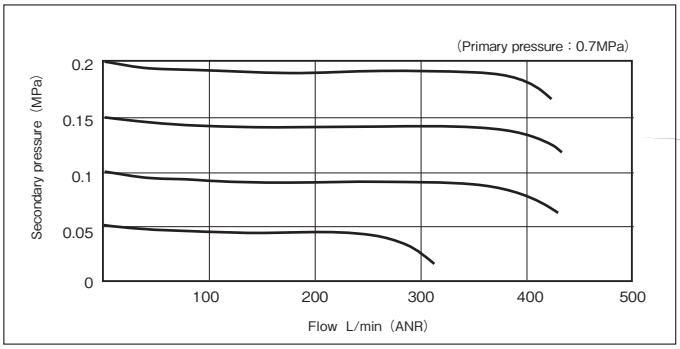

FR21-04-15A

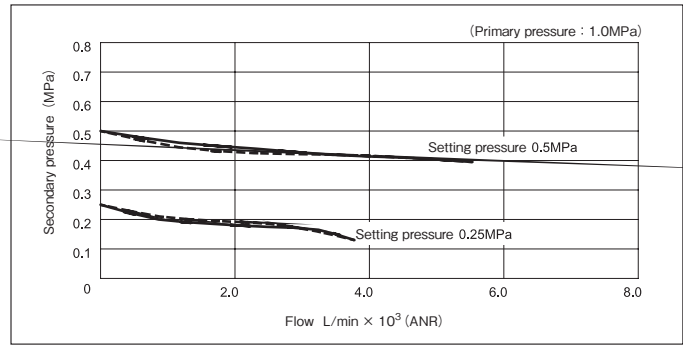

Performance Tables

Pressure characteristics graphs

Standard and Panel-mount , Instrumentation type

ARU2-02-6A・8A

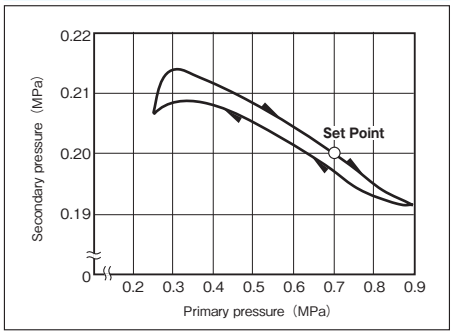

ARU3A-03-8A・10A

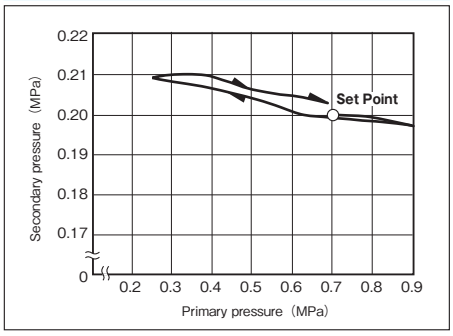

FR5-02-8A・10A

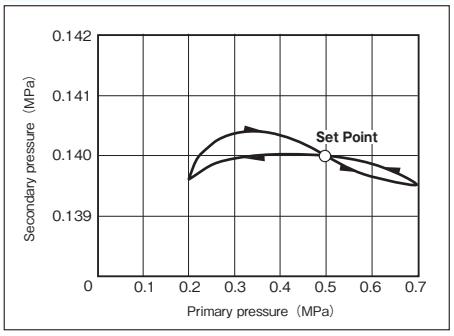

FR21-04-10A

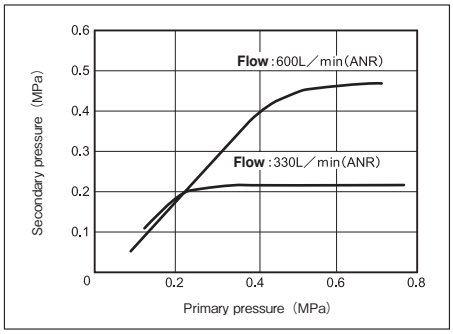

FR21-04-15A ※This characteristics are based on the new JIS standard.

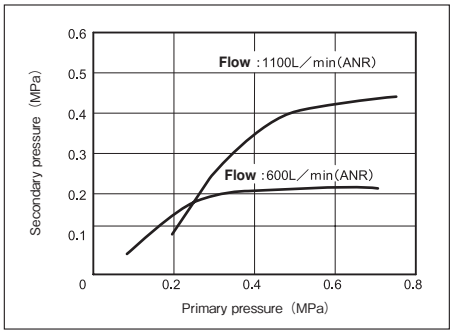

Relief characteristics graphs

Standard and Panel-mount type

FR21-04-10A ※This characteristics are based on the new JIS standard.

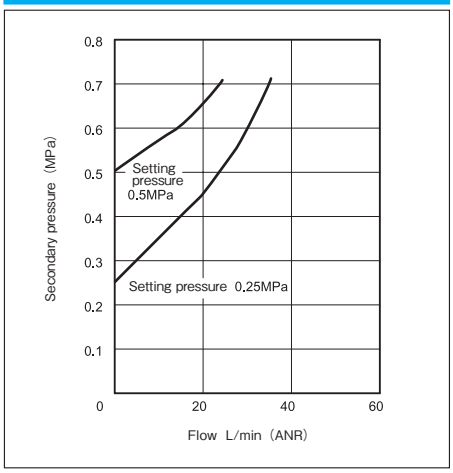

FR21-04-15A ※This characteristics are based on the new JIS standard.

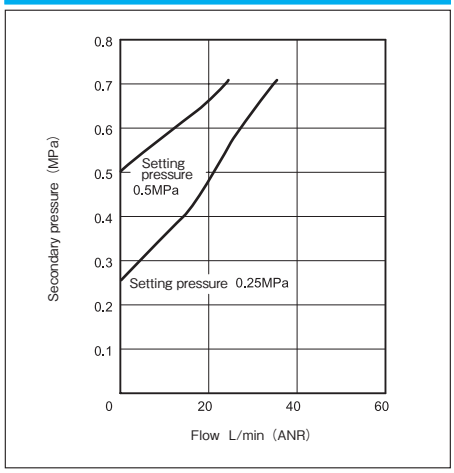

Operating Instructions

1 Installation

- Install as far from the air source as possible.For a circuit where the flow of air is reversed from the secondary to the primary side,install a check valve in parallel.

- Leave space so that the bowl can be removed to check and maintain the filter element.

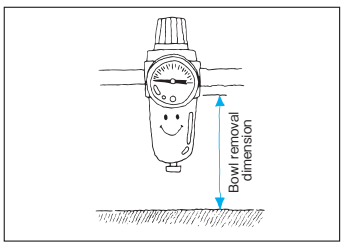

- Install the unit and piping so that the drain opening is located at the bottom.

2 Lubrication

- In general,do not lubricate.When disassembling for checking,however,apply grease.

3 Discharging drain fluid

ARU2 — 02

- Push the push rod of the drain valve upwards.

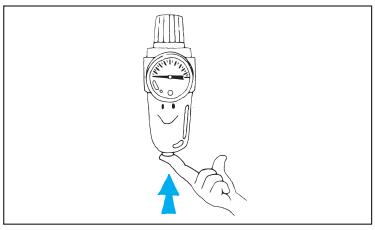

Other types

- Turn the handle of the drain cock counterclockwise.The pressure in the bowl will discharge the drain.

4 Bracket

- The FR unit mounting bracket is available as an option.To install the bracket,see the figure at right.

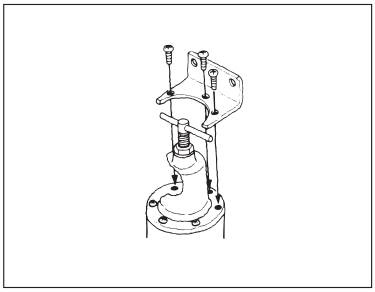

- Remove any three machine screws from the upper part of the FR unit.Mount the bracket with the three longer machine screws supplied with the bracket.
- For the miniature type,secure the bracket using lock screw.

Four-Ports

MANUAL CONTROLED VALVES

PVT1	Standard type	RC 1/4 ~ 1/2
PVT406K		RC 3/4
PVT410K		RC 1
PVT1M	With lock mechanism type	RC 3/8 · 1/2
PVT1L	Bottom-port type	RC 3/8 · 1/2
PVT406L		RC 3/4
PVT410L		RC 1

These are 3 position control valves which operated manually.

JIS Symbol

See Model Code section.

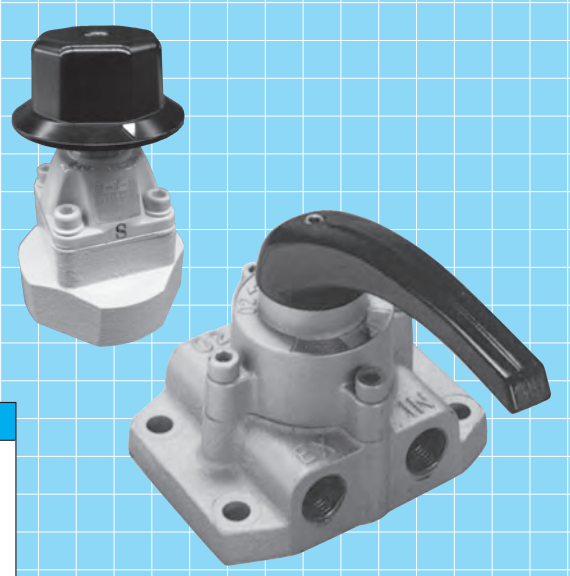

Specifications

Model code	Standard type	PVT1			PVT406K	PVT410K
	Type with lock mechanism		PVT1M			
	Bottom-port type	※	PVT1L		PVT406L	PVT410L
Port size		8A	10A	15A	20A	25A
		Rc1/4	Rc3/8	Rc1/2	Rc3/4	Rc1
Effective sectional area		5.7㎟	50㎟	60㎟	100㎟	
Operating angle		90°	120°			
Operating pressure		0 ~ 0.7MPa				
Proof pressure		1.05MPa				
Allowable valve leakage		50㎤/min (ANR) . [at 0.5MPa]				
Operating temperature		5 ~ 60°				
Mass		2.0kg	2.6kg		7.2kg	8.0kg

● For specifications other than those listed above, please contact us.
※ Note that size 8A or PVT1 is of the bottom pipe type.
● In the event of use in high bry air over dew point − 40℃ , please contact us.

Model Code

When ordering,specify the model as follows:

Standard type

Rc 1/4	PVT1 ❶ ❷ –8A ● Handle shape ● Valve type
Rc 3/8 ~ 1/2	PVT1 ❷ – ❺ ● Valve type ● Port size
Rc 3/4	PVT406K ❸ – 20A ● Valve type
Rc 1	PVT410K ❸ – 25A ● Valve type

Type with lock mechanism

Rc 3/8 ~ 1/2	PVT1M ❸ – ❹ – ❺ ● Valve type ● Stopper position ● Port size

Bottom-port type

Rc 3/8 ~ 1/2	PVT1L ❸ – ❺ ● Valve type ● Port size
Rc 3/4	PVT406L ❸ – 20A ● Valve type
Rc 1	PVT410L ❸ – 25A ● Valve type

❶ Handle shape

Round handle	No entry
Rod handle	B

● Round handle is not available for 10A and 15A.

❷ Valve type

Closed center	8A	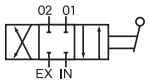	No entry
	10A・15A	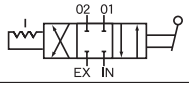	
Open center	8A	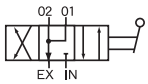	R
	10A・15A	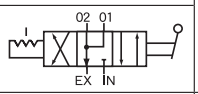	
Exhaust Block	8A	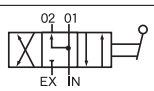	E

❸ Valve type

Closed center	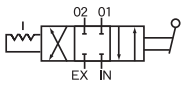	No entry
Open center	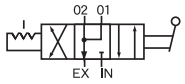	R

❹ Stopper position

Neutral	1
Both ends	2
All positions	3

❺ Port size

Rc3/8	10A
Rc1/2	15A

Outside Dimensions

Standard type

PVT1-8A

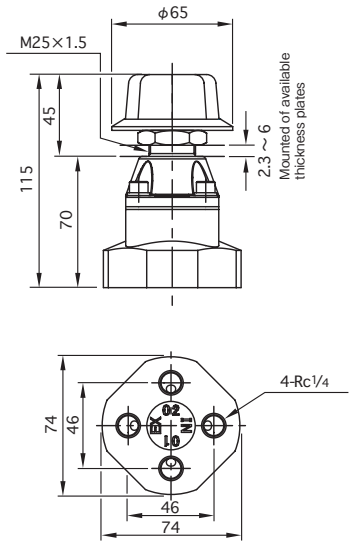

PVT1B-8A

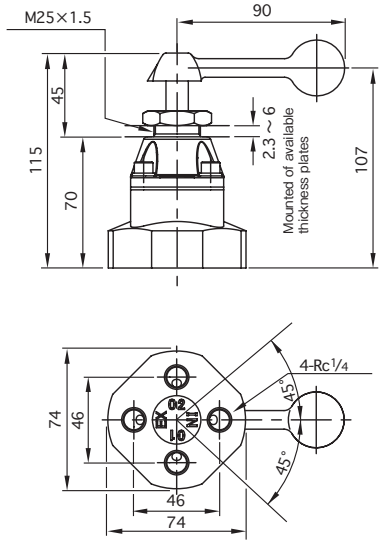

Outside Dimensions

Standard type

PVT1-10A・15A

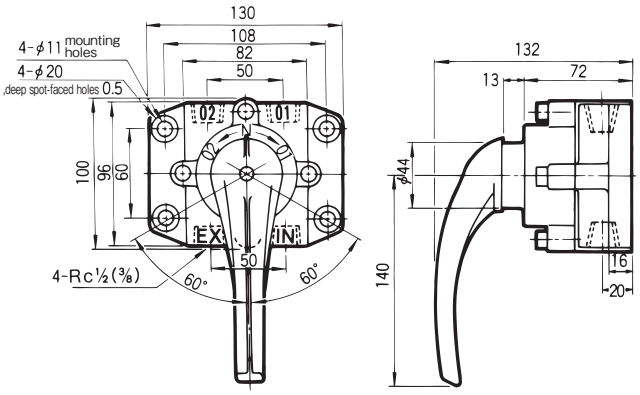

PVT406K-20A

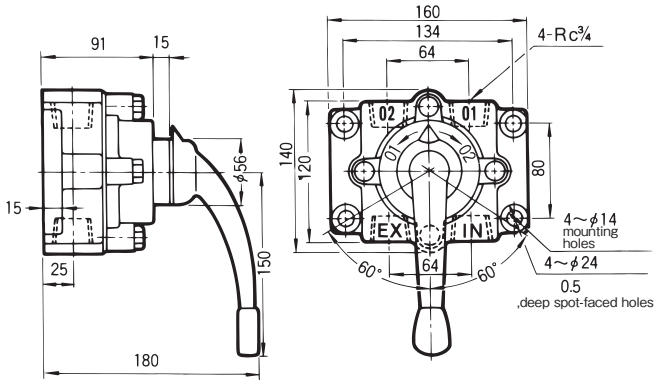

PVT410K-25A

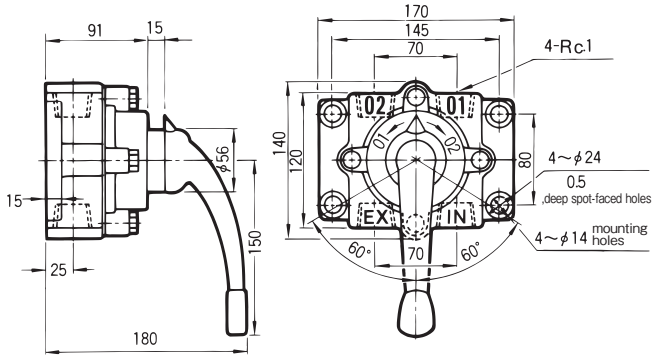

Type with lock mechanism

PVT1M-10A・15A

Outside Dimensions

Bottom-port type

PVT1L-10A・15A

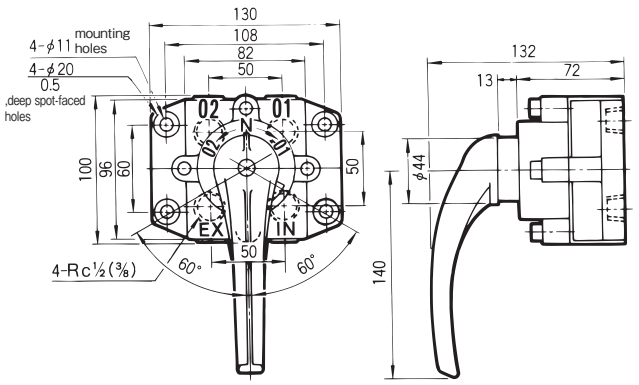

PVT406L-20A

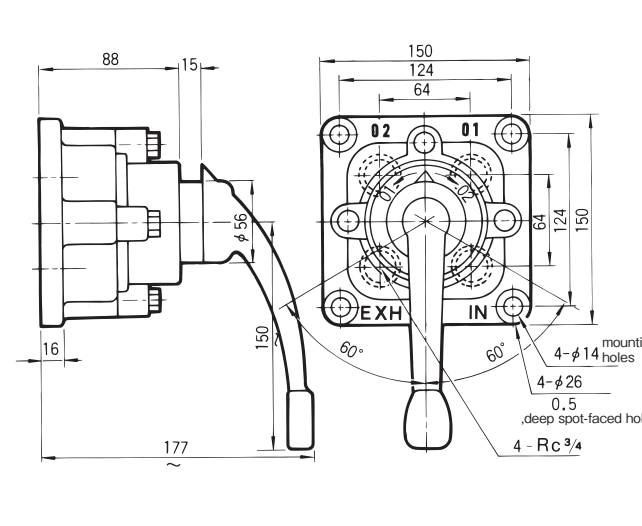

PVT410L-25A

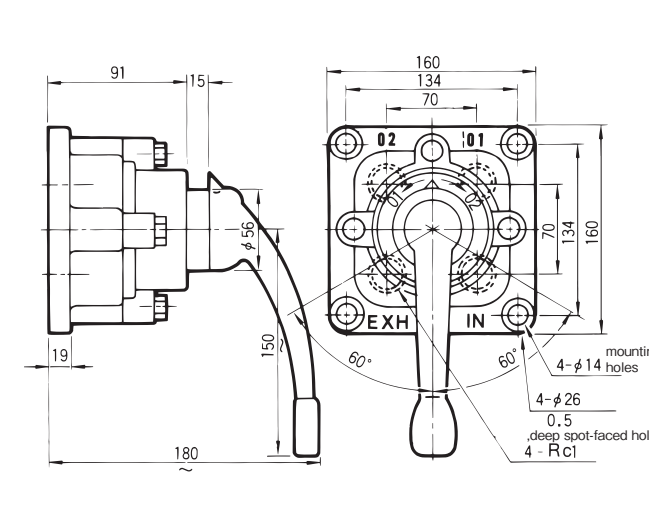

Performance Tables

Flow characteristics graphs

Standard and With lock mechanism , Bottom-port type

PVT1-8A

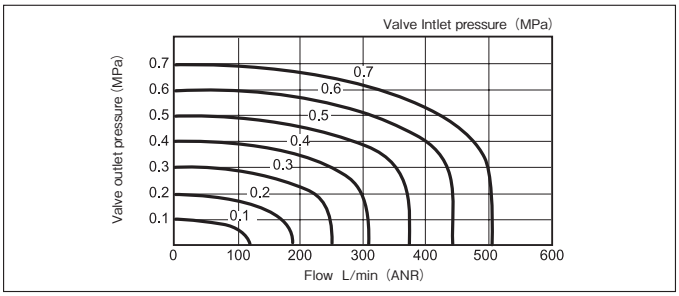

PVT1-10A

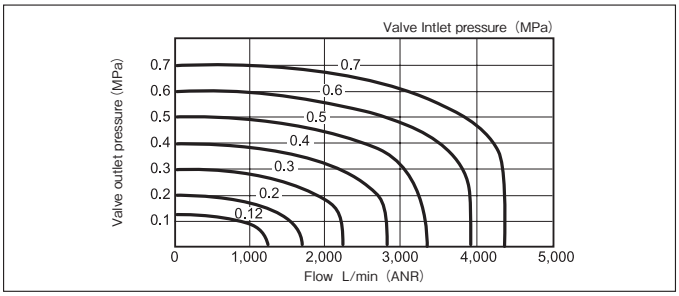

PVT1-15A

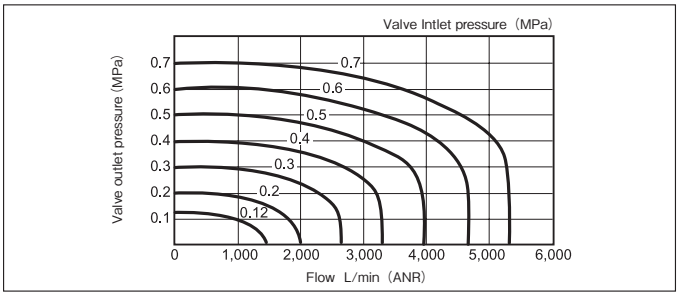

PVT406K-20A

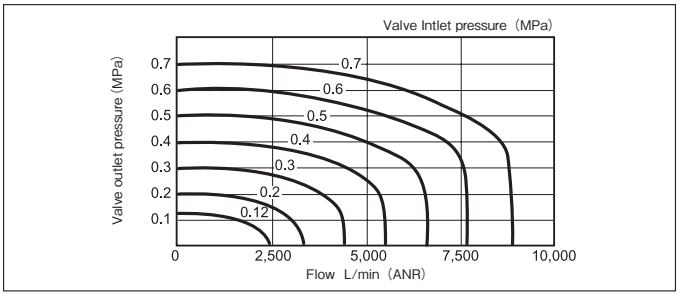

PVT410K-25A

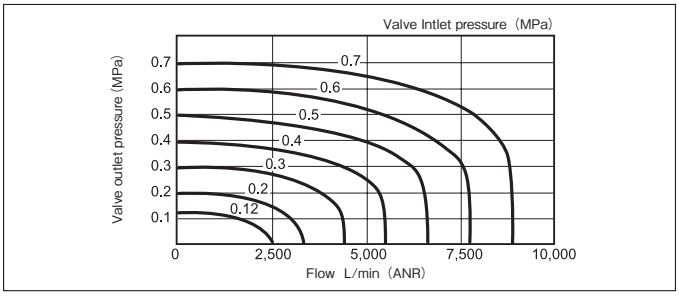

Operating Instructions

1 Installation

● Clean the piping.

Flash the piping thoroughly after laying.Use pipes with an inside surface plated with zinc.

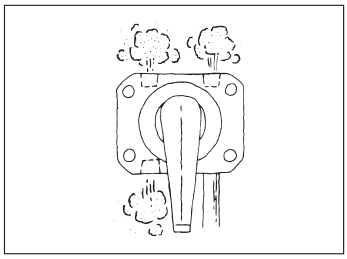

● Fluid.

Since dirt and wastes in the fluid hinder proper functioning of the valve and shorten its service life,use clean air as the fluid.

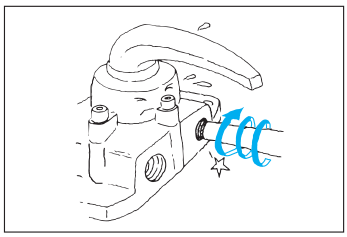

● Do not force port.

Lirnit the number of pipe threads screwed into the valve to four or five for any of sizes 8A to 25A (Rc1/4 "to 1") .
If the pipe is forced to enter the valve beyond that point,the valve body may be cracked,and leakage or malfunctioning result.

● If valves other than the type with a lock mechanism are to be installed and used vertically,please contact us.

2 Before use

● Conversion to a threeport valve.

If either of the two OUT ports is plugged,the valve can be used as a threeway,directional control valve.

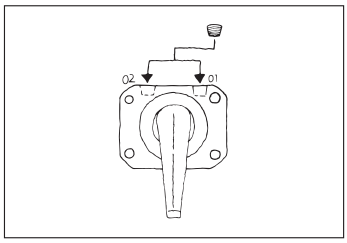

● Leakage from the disc.

Since a disc is fitted in the valve,a small amount of leakage may occur due to deformation at installation or from long periods of use,etc.However,this will cause no problem in normal use of the valve.

SILENCERS

ES3	Standard resin-made type	R 1/8 ~ R1
ES4	Standard metal-made type	R 3/4 ~ R2 1/2
ES4S	Standard stainless-steel type	M5 ~ R 1/2
ES5	Flat metal-made type	M5 ~ R 1/2
ES5S	Flat stainless-steel type	R 1/8 ~ R 1/2
EVS5	With throttle valve (resin-made)	R 1/8 ~ R 1/4
EVS4-M5/EVS6	With throttle valve (metal-made)	M5 · R1/8 ~ R1/2

Silencers are designed to attenuate the exhaust noise caused by control of pneumatic lines.In general,silencers are mounted on the exhaust ports of solenoid valves,directional control valves and the like,to reduce exhaust noise when direction is changed.This contributes to overall noise reduction in plants.

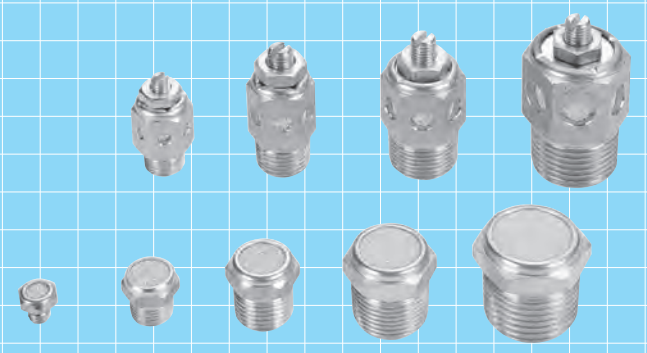

Specifications

Port size			M5	6A	8A	10A	15A	20A	25A	32A	40A	50A	65A
				R1/8	R1/4	R3/8	R1/2	R3/4	R1	R1 1/4	R1 1/2	R2	R2 1/2
Model code	Standard type	resin	–	ES3						–			
		metal	–					ES4					
		Stainless-steel	ES4S					–					
	Flat type	metal	ES5					–					
		Stainless-steel		ES5S				–					
	With throttle valve	resin	–	EVS5		–							
		metal	EVS4	EVS6				–					
Effective sectional area (mm²)		ES3	–	15	30	60	90	160	230	–			
		ES4	–					160	270	459	660	910	1390
		ES5	3.5	10	25	30	34	–					
		ES4S	4.0	13	20	25	56	–					
		ES5S	–	3.5	4.0	6.5	12	–					
		EVS5	Refer to the flow characteristic graphs.										
		EVS4											
		EVS6											
Operating pressure			0 ~ 1.0MPa										
Ambient temperature range (For use below 5℃ ,be careful about freezing.)		ES3	– 20 ~ 60℃										
		ES4											
		ES5											
		EVS5	Fluid : 5 ~ 60℃ Ambient temperature : – 10 ~ 60℃										
		EVS4	– 20 ~ 60℃										
		EVS6	– 5 ~ 60℃										
		ES4S	5 ~ 150℃										
		ES5S											
Attenuation		ES3	–	17dB (A)			20dB (A)			–			
		ES4	–					20dB (A)		15dB (A)			
		ES5	15dB (A)					–					
		ES4S	20dB (A)					–					
		ES5S	–	20dB (A)				–					
		EVS5	–	15dB (A)		–							
		EVS4	7dB (A)	–									
		EVS6	–	15dB (A)				–					
Mass			Refer to the Outside Dimensions chart.										

Model Code

When ordering,specify the model as follows:

Standard resin-made type

R 1/8 ~ 1 — **ES3 – ①**

● Port size

Standard metal-made type

R 3/4 ~ 2_1/2 — **ES4 – ②**

● Port size

Standard stainless-steel type

M5 ~ R 1/2 — **ES4S – ③**

● Port size

Flat metal-made type

M5 ~ R 1/2 — **ES5 – ③**

● Port size

Flat stainless-steel type

R 1/8 ~ 1/2 — **ES5S – ④**

● Port size

With throttle valve (resin-made)

R 1/8 ~ 1/4 — **EVS5 – ⑤**

● Port size

With throttle valve (metal-made)

M5 — **EVS4 – M5**

R 1/8 ~ 1/2 — **EVS6 – ④**

● Port size

JIS Symbol	
Standard type	With throttle valve
ES3、ES4、ES4S、ES5、ES5S	EVS4、EVS6

① Port size

R 1/8	6A
R 1/4	8A
R 3/8	10A
R 1/2	15A
R 3/4	20A
R 1	25A

② Port size

R 3/4	20A
R 1	25A
R 1 1/4	32A
R 1 1/2	40A
R 2	50A
R 2 1/2	65A

③ Port size

M5 thread	M5
R 1/8	6A
R 1/4	8A
R 3/8	10A
R 1/2	15A

④ Port size

R 1/8	6A
R 1/4	8A
R 3/8	10A
R 1/2	15A

⑤ Port size

R 1/8	6A
R 1/4	8A

Construction/Operation

Standard metal-made type ES3-6A ~ 25A

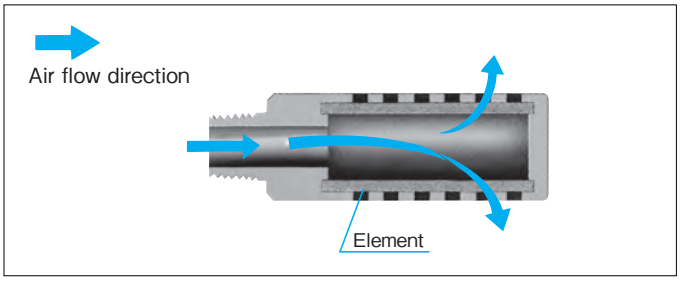

With throttle valve EVS4-M5

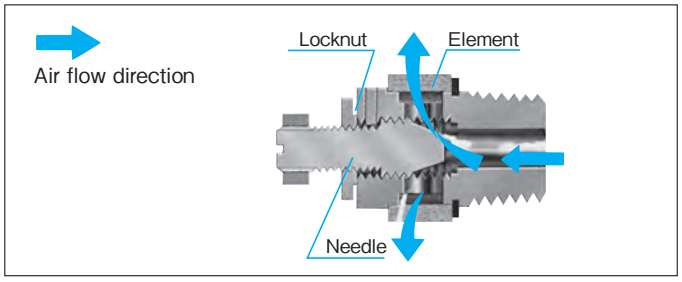

ES3 Standard resin-made type

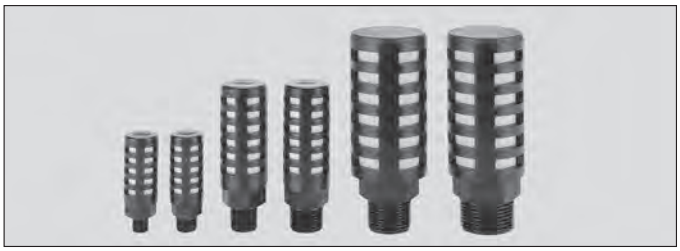

EVS5 With throttle valve (resin-made)

ES4 Standard metal-made type

EVS4 With throttle valve (metal-made)

ES4S Standard stainless-steel type

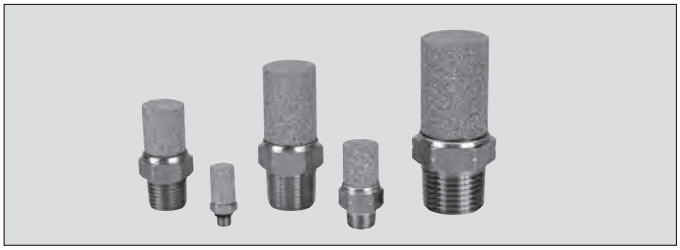

EVS6 With throttle valve (metal-made)

ES5 Flat metal-made type

ES5S Flat stainless-steel type

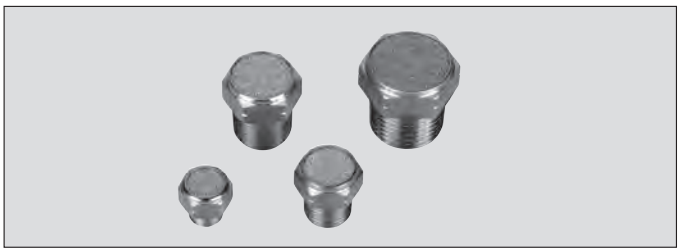

Outside Dimensions

Standard resin-made type

ES3-6A ～ 25A

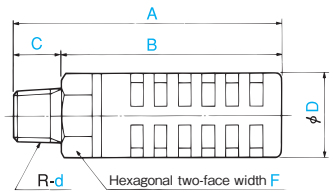

■ Dimensional Table

Units : mm

Model code	d	A	B	C	D	F	Mass (g)
ES3－6A	1/8	60	50	10	20	17	15
ES3－8A	1/4	60	50	10	20	17	15
ES3－10A	3/8	91	75	16	28	24	40
ES3－15A	1/2	91	75	16	28	24	40
ES3－20A	3/4	128	108	20	48	36	130
ES3－25A	1	128	108	20	48	36	130

Standard metal-made type

ES4-20A ～ 65A

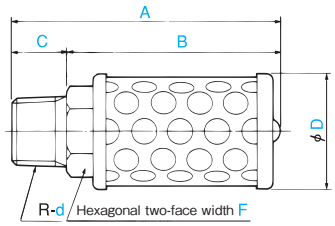

■ Dimensional Table

Units : mm

Model code	d	A	B	C	D	F	Mass (g)
ES4－20A	3/4	110	88	22	46	36	210
ES4－25A	1	156	130	26	46	36	270
ES4－32A	1 1/4	199	172	27	72	50	750
ES4－40A	1 1/2	243	212	31	72	50	810
ES4－50A	2	247	215	32	98	70	1600
ES4－65A	2 1/2	367	333	34	98	80	2600

Standard stainless-steel type

ES4S-M5 ～ 15A

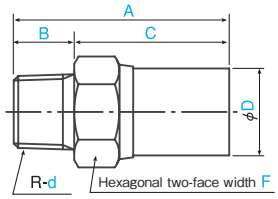

■ Dimensional Table

Units : mm

Model code	d	A	B	C	D	F	Mass (g)
ES4S－M5	M5	20	5	15	8	8	4
ES4S－6A	1/8	27.5	6.5	21	11.5	13	12
ES4S－8A	1/4	35	11	24	14	16	24
ES4S－10A	3/8	47.5	13.5	34	17.5	19	38
ES4S－15A	1/2	57	16	41	22	24	60

Flat metal-made type

ES5-M5 ～ 15A

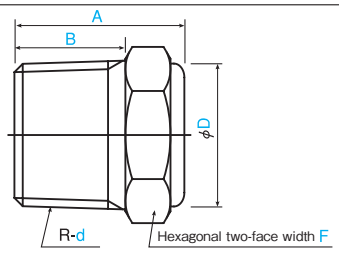

■ Dimensional Table

Units : mm

Model code	d	A	B	D	F	Mass (g)
ES5－M5	M5	8.8	5	7.5	8	4
ES5－6A	1/8	12.7	7	10.8	11	13
ES5－8A	1/4	17.8	11	13.3	14	28
ES5－10A	3/8	21.2	13.5	16.5	18	50
ES5－15A	1/2	24.5	16	20.6	22	72

Flat stainless-steel type

ES5S-6A ～ 15A

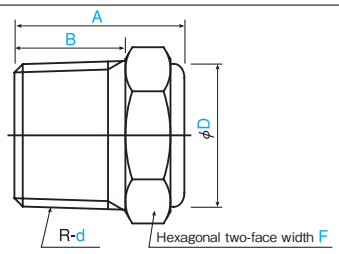

■ Dimensional Table

Units : mm

Model code	d	A	B	D	F	Mass (g)
ES5S－6A	1/8	14.5	6.5	12.5	13	8
ES5S－8A	1/4	19	11	15.2	16	15
ES5S－10A	3/8	22.5	13.5	18.6	19	23
ES5S－15A	1/2	22.5	16	23.1	24	39

Outside Dimensions

With throttle valve（resin-made）

EVS5-6A resin-made

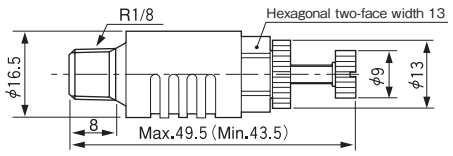

Mass (g)
30

EVS5-8A resin-made

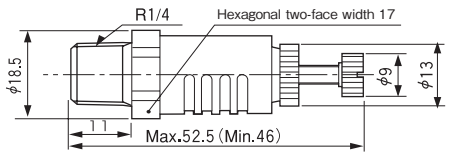

Mass (g)
35

With throttle valve（metal-made）

EVS4-M5 metal-made

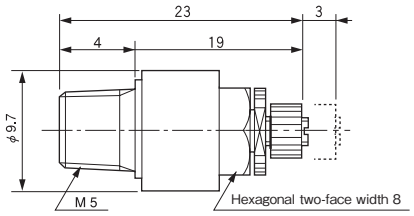

Mass (g)
5

EVS6 metal-made

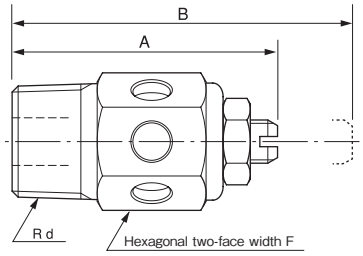

Model code	d	A	B	F	Mass (g)
EVS6－6A	1/8	29	39	12.7	18
EVS6－8A	1/4	36.5	47	14	32
EVS6－10A	3/8	39.8	50	17.5	49
EVS6－15A	1/2	45.6	59	22	84

Performance Tables

Flow characteristics graphs (Exhaust air)

ES3・ES4・ES5

Calculate the flow (Q) of standard type silencers using the formula shown on the right.

Q : Flow (L/min) **S** : Effective sectional area (㎟)
PH=Silencer IN side absolute pressure (MPa,abc.) = (Gauge pressure : PH+0.1033MPa)
T=Silencer IN side temperature (K)

$$Q = 113SP_H\sqrt{\frac{273}{T}}$$

EVS5-6A

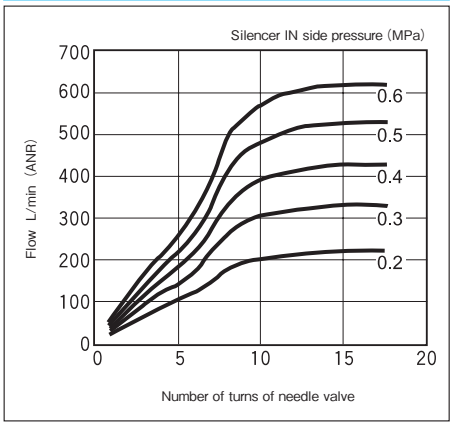

EVS4-M5

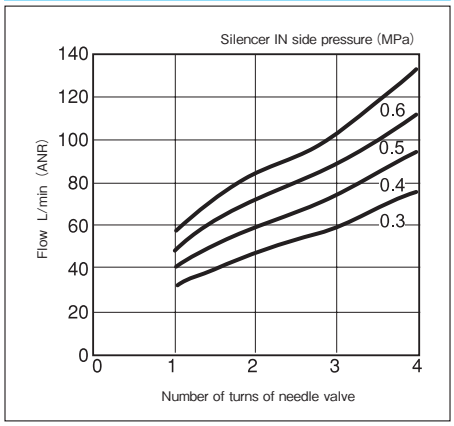

EVS6-10A

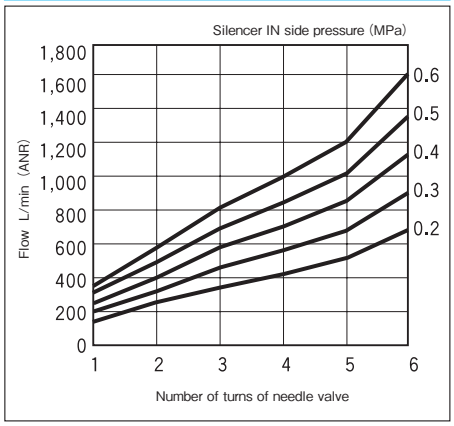

EVS5-8A

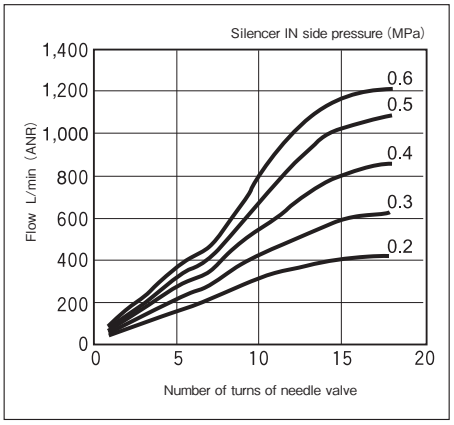

EVS6-6A

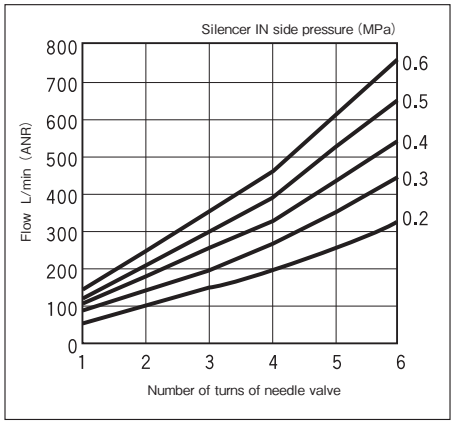

EVS6-15A

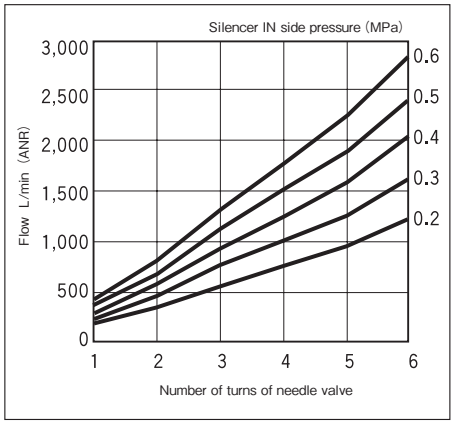

EVS6-8A

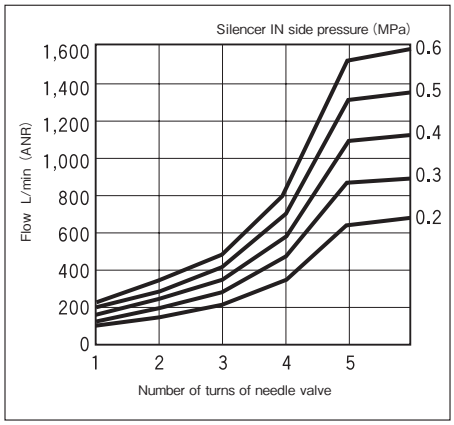

Operating Instructions

1 Installation

● Resin-made

For silencers of sizes up to 8A,screw the silencer in lightly as far as it will go by hand.
For sizes 10A to 25A,repeat as for size 8A,and then screw in tighter with a hex driver inserted into the hexagonal part of the silencer.

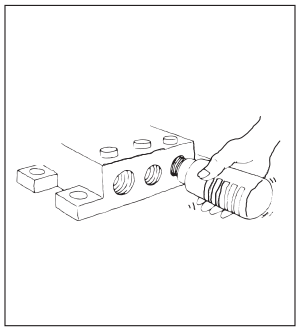

● Metal-made

For all sizes,first screw in lightly as far as possible by hand,and then tighten with a hex driver inserted in the hexagonal part of the silencer.

● With throttle valve

For all sizes,first screw in lightly by hand as far as it will go,and tighten with a hex driver which can be inserted in the hexagonal part of the silencer

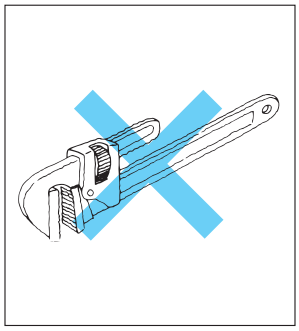

● Never attempt to apply a pipe wrench,etc.,to the cap (body) of the silencer,regardless of the material-resin or metal,of which it is made.

2 Use of the silencer with a throttle valve

● When adjusting exhaust air flow,rotate the needle clockwise to reduce the flow,and counterclockwise to increase the flow.
● After exhaust air flow adjustment,tighten the lock nut.
● When controlling the cylinder speed,mount a directional control valve onto the exhaust port. Take care not to squeeze the air supply port of the direction control valve,as well as the piping between the air cylinder and the directional control valve.

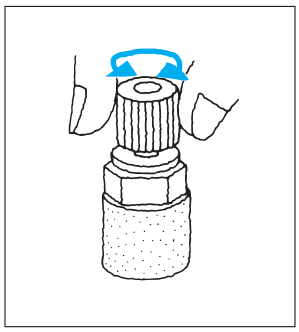

3 During use

● If the actuator,air cylinder, etc.,becomes extremely sluggish, the silencer may be clogged. In such case,flush or wash out the exterior of the silencer.If clogging persists,the silencer must be replaced.

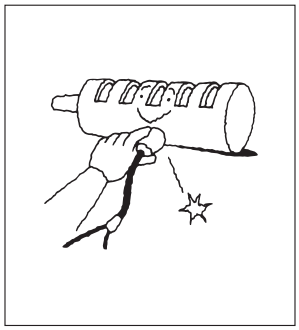

EXHAUST FILTERS

KMFC2	RC 3/8・3/4・1・1 1/2・2

KMFC2 series exhaust filter collects oil mist in compressed air with excellent efficiency up to 99.9% . At the same time cuts off the noise from a centralized exhaust system. This dual function of oil elimination and noise reduction ensures comfortable work environment.

JIS Symbol

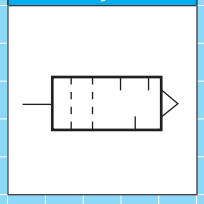

Model Code

When ordering,specify the model as follows:

KMFC2 – ❶ – ❷

❶ Port size　❷ Bracket

❶ Port size	
Rc 3/8	10
Rc 3/4	20
Rc 1	25
Rc 1_1/2	40
Rc 2	50

❷ Bracket	
Without	No entry
With	BR

● Bracket is not mounted but appended with regulators.

Specifications

	KMFC2-10	KMFC2-20	KMFC2-25	KMFC2-40	KMFC2-50
Port size	Rc3/8	Rc3/4	Rc1	Rc1 1/2	Rc2
Effective sectional area	35㎟	105㎟	160㎟	350㎟	585㎟
Max.flow rate	450L/min	1,600L/min	3,000L/min	6,400L/min	10,500L/min
Noise reduction	32dB	28dB	32dB	23dB	22dB
Operating temperature	5 ～ 60℃				
Mass	0.28kg	0.56kg	0.75kg	1.3kg	1.8kg
Oil mist collection	99.9%				

● Noise reduction is defined as the difference between the noise that occurs at the orifice when fluid with max. flow rateis applied at 0.5MPa and that occurs when exhaust filter is mounted to the orifice (noise measured at 1m away from noise source).

Outside Dimensions

● KMFC2

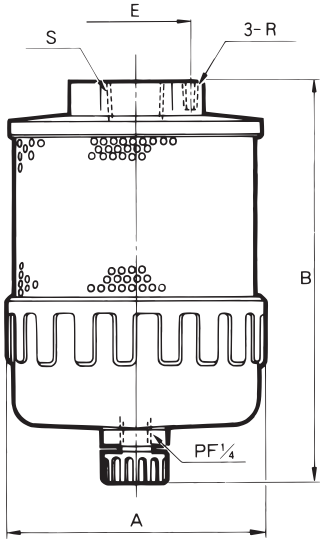

● Bracket

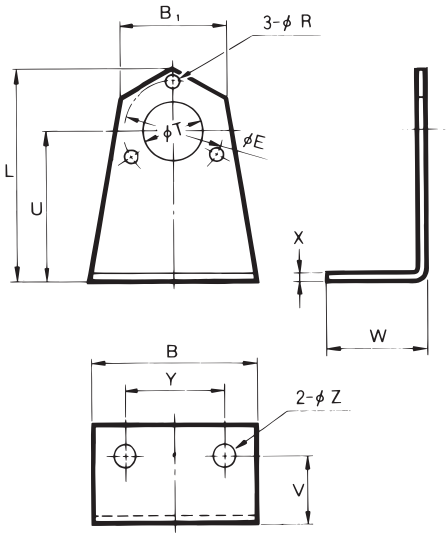

■ Dimensions Units : mm

Model code	A	B	E	R	S
KMFC2 – 10	77	119	φ30	M4 × 0.7 depth 8	Rc3/8
KMFC2 – 20	102	169	φ44	M5 × 0.8 depth 10	Rc3/4
KMFC2 – 25	117	198	φ48	M5 × 0.8 depth 10	Rc1
KMFC2 – 40	137	258	φ66	M6 × 1 depth 10	Rc1 1/2
KMFC2 – 50	152	315	φ76	M6 × 1 depth 10	Rc2

■ Bracket Dimensions Units : mm

Model code	B	B1	L	R	T	U	V	W	X	Y	Z	E
KMFC2 – 10	50	32	64	4.5	18	44	20	30	2.3	30	7	30
KMFC2 – 20	70	46	82	5.5	29	54	20	30	3.2	40	7	44
KMFC2 – 25	70	50	92	5.5	37	62	20	30	3.2	40	7	48
KMFC2 – 40	100	70	115	7	50	74	25	35	4	70	9	66
KMFC2 – 50	100	80	127	7	62	80	25	35	4	70	9	76

Application Example

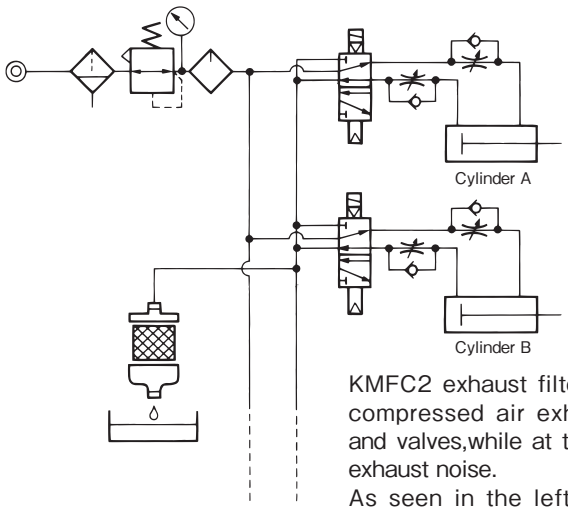

KMFC2 exhaust filter collects oil mist in compressed air exhaust from actuators and valves,while at the same time cuts off exhaust noise.
As seen in the left figure,a centralized exhaust system enhances efficient dual function of the filter.

Flow characteristics graphs

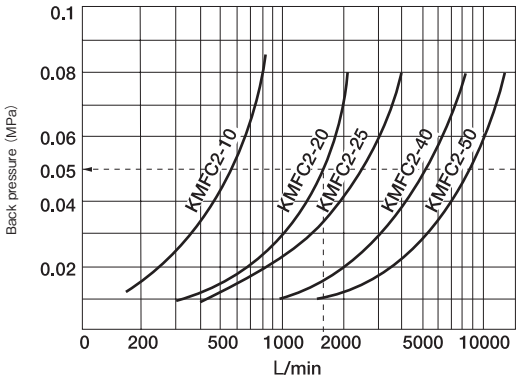

● When KMFC2-20A is used at 1600 L/min, back pressure is 0.05MPa.

Model Selection Chart

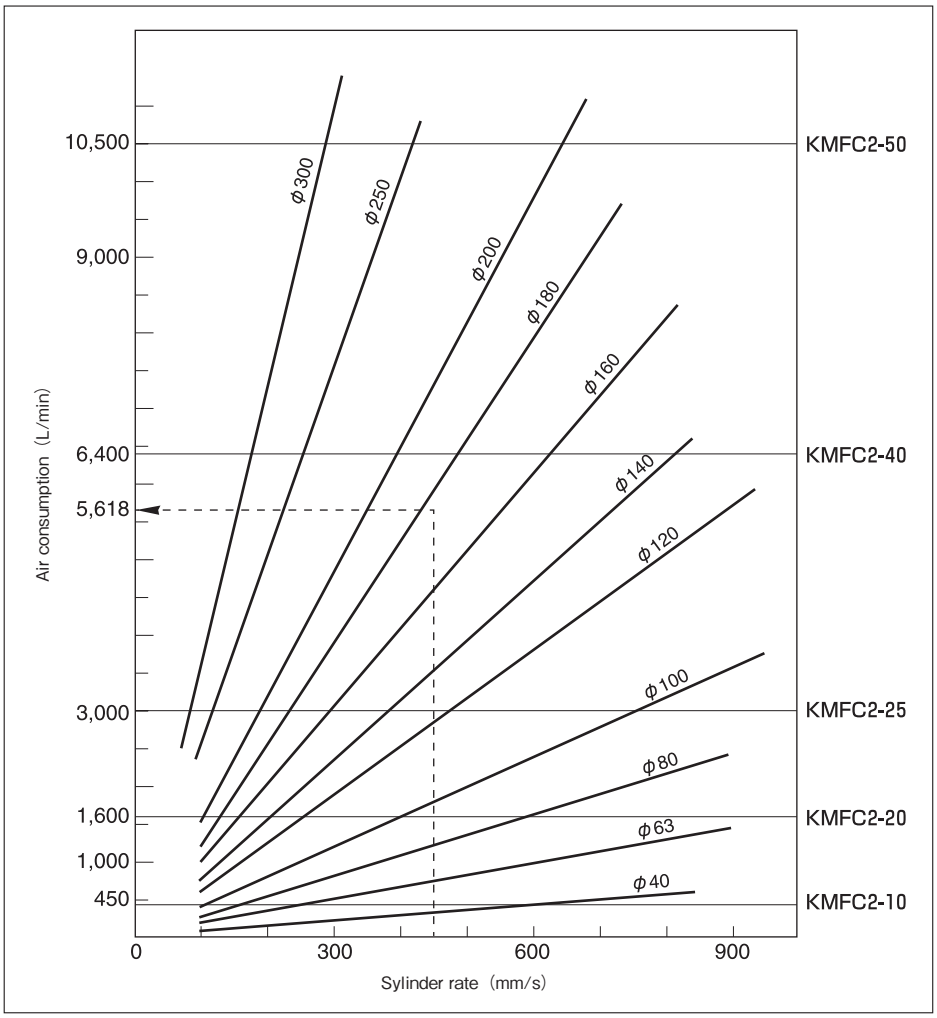

Guidance for selection

Type of exhaust filter is determined based on air consumption of the applicable circuit.

① Calculate air consumption of an actuator that works with the filter.
If port volume between switch valve and actuator is large,add the volume to the calculated value.

② Multiply the calculated value 1.4-fold,and select an exhaust filter that functions with higher flow rate than the multiplied value.Refer to the 1.4-fold air consumption values of an Pneumatic cylinder left for selection of the exhaust filter.Please use for model selection.

Example of calculation

Conditions

Working pressure : 0.5MPa (gage pressure)
Bore size of cylinder : φ180
Piston speed : 450mm/s

Air consumption of cylinder

$$\underbrace{\frac{\pi}{4}\times 18^2}_{\text{Cylinder piston area (cm}^2\text{)}}\times\underbrace{45\times 60}_{\text{Rate (cm/min)}}\times\underbrace{0.6013}_{\text{Absolute pressure (MPa)}}\times\frac{1.4}{0.1013}\times\frac{1}{1000}=5618\ \text{L/min}$$

● As result,KMFC2-40A (Nax flow 6400L/min) is selected.

Operating Instructions

1 Installation

● Install the air filter so that the drain port is located at the bottom.

2 Discharging drain fluid

● Exhaust the collected drain from a drain cock before they enter into the filter element.

MANIFOLD FILTERS

MF2	Standard type	R 1/4 ~ 1 1/2

Some pneumatic devices have a port open to the atmosphere.Examples are single-acting cylinders and vacuum devices.
The manifold filter is installed on the open port of such devices to prevent foreign particles such as dirt,dust and scale,contained in external air from entering the devices.

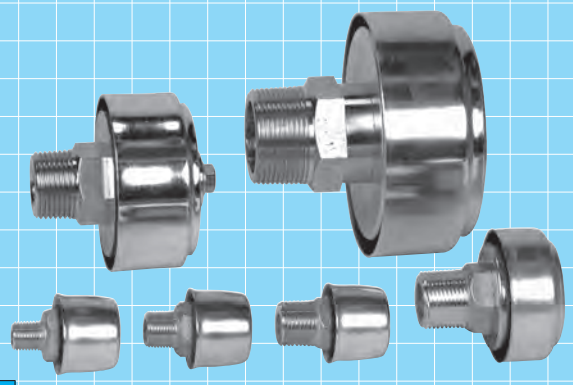

JIS Symbol

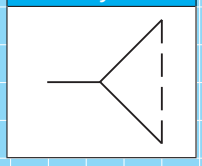

Model Code

When ordering,specify the model as follows:

Standard type

MF2 – ❶

● Port size

❶ Port size	
R1/4	8A
R3/8	10A
R1/2	15A
R3/4	20A
R1	25A
R1_1/2	40A

Specifications

Model code	MF2					
Port size	8A	10A	15A	20A	25A	40A
	R1/4	R3/8	R1/2	R3/4	R1	R1 1/2
Operating pressure	Max. 1.0MPa					
Operating temperature	– 20 ~ 60℃ (For use below 5℃ ,provide adequate measures against freezing.)					
Mass	0.05kg			0.1kg	0.25kg	0.9kg

● For specifications other than those listed above,please contact us.

Operation

Standard type MF2 – 15A

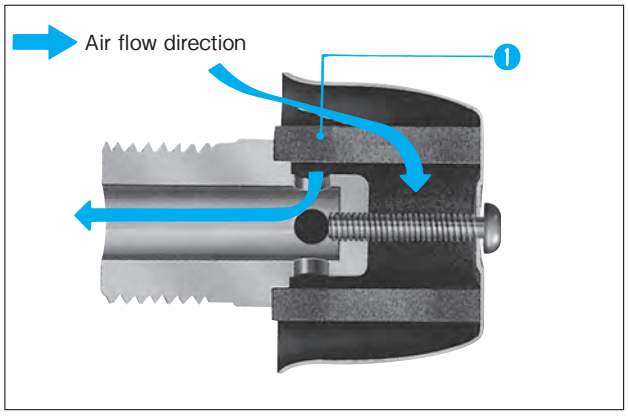

❶ Element

● Shuts out minute particles,scale,etc. contained in external air.

Outside Dimensions

MF2-8A・10A・15A

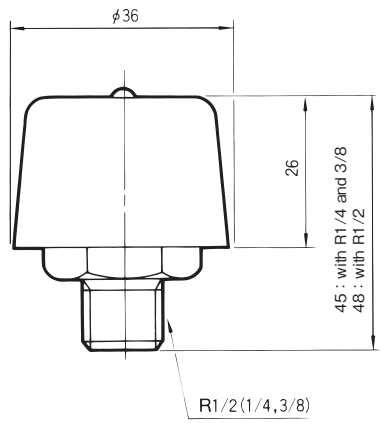

MF2-20A・25A・40A

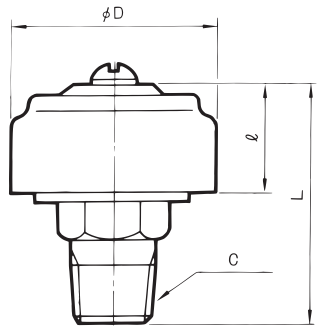

Units : mm

Size	20A	25A	40A
C	R3/4	R1	R1 1/2
D	60	85	120
L	61	81	110
ℓ	27	46	55

Performance Tables

Flow characteristics graphs

MF2-8A・10A・15A

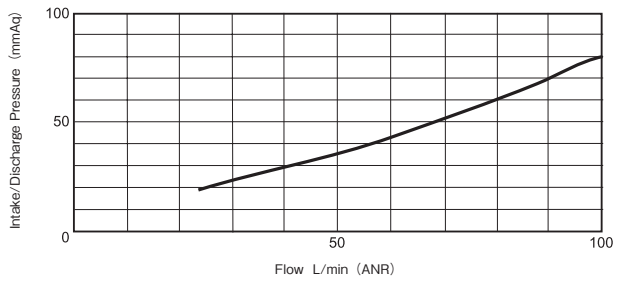

MF2-20A

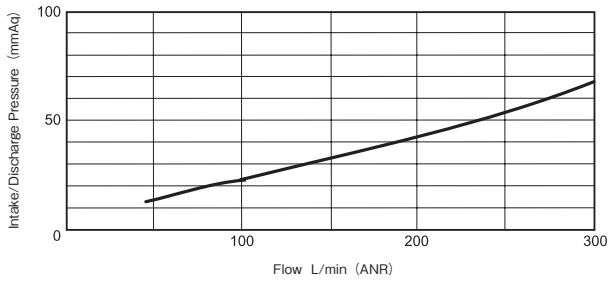

MF2-25A

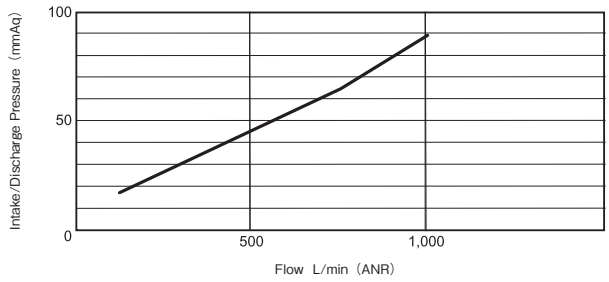

MF2-40A

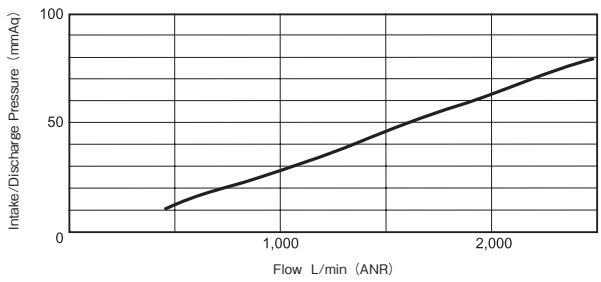

SPEED CONTROLLERS

The speed controller is installed on actuators such as cylinders and air motors,and controls the operating speed of the actuator by adjusting the flow through the actuator.

SC6	Standard type	RC 1/4 ~ 1
SC213	Standard type	RC 1 1/4 ~ 50A Flange
SC6F	Fine-tuning type	RC 3/8

JIS Symbol

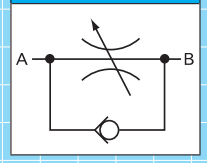

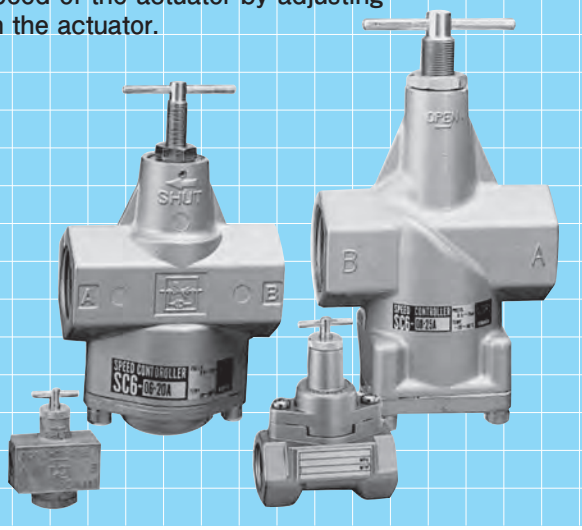

Model Code

When ordering,specify the model as follows:

Standard type

Rc 1/4 ~ 3/8	SC6 ❶ -02- ❷ - ❼
Rc 1/4 ~ 1/2	SC6 ❶ -04- ❸ - ❼
Rc 1/2 ~ 3/4	SC6 ❶ -06- ❹ - ❼
Rc 3/4 ~ 1	SC6 ❶ -08- ❺ - ❼
Rc 1_1/4 ~ 50A Flange	SC213 ❶ - ❻

- ❶ Corrosion-resistant
- ❷ Port size
- ❼ Operating temperature range

Fine-tuning type

Rc 3/8	SC6F-02-10A- ❼

- ❼ Operating temperature range

❶ Corrosion-resistant

- Portions that are exposed to outside weather conditions are corrosion-resistant coating and the exposed bolts,nuts and brackets are stainless steel.

Standard	No entry
Corrosion-resistant type	S

❷ Body size and Port size

02	Rc1/4	8A
	Rc3/8	10A

❸ Body size and Port size

04	Rc1/4	8A
	Rc3/8	10A
	Rc1/2	15A

❹ Body size and Port size

06	Rc1/2	15A
	Rc3/4	20A

❺ Body size and Port size

08	Rc3/4	20A
	Rc1	25A

❻ Port size

Rc 1_1/4	32A
Rc 1_1/2	40A
50A Flange	50A

❼ Operating temperature range

General purpose	– 20 ~ 60℃	No entry
Heat-resistant	5 ~ 100℃	HT
Freeze-resistant	– 40 ~ 45℃	LT

- For corrosion.freeze resistant type,allow some margin for delivery.
- Freeze resistant type is not available for 04 body size.
- In operating temperatures of 5℃ or less, provide adequate measures against freezing.

Specifications

Standard type

Model code		SC6-02		SC6-04			SC6-06		SC6-08		SC213		
Port size		8A	10A	8A	10A	15A	15A	20A	20A	25A	32A	40A	50A Flange
		Rc1/4	Rc3/8	Rc1/4	Rc3/8	Rc1/2	Rc1/2	Rc3/4	Rc3/4	Rc1	Rc1 1/4	Rc1 1/2	
Effective sectional area	Max.controlled flow	10㎟		25㎟	32㎟		72㎟		150㎟	170㎟	310㎟	360㎟	1,050㎟
	Free flow	12.5㎟		30㎟	38㎟		90㎟		152㎟	172㎟	210㎟	260㎟	840㎟
Operating pressure		0.05 ～ 0.7MPa											
Proof pressure		1.05MPa											
Cracking pressure		0.05MPa or less											
Operating temperature		See Model Code section.									5 ～ 60℃		
Mass		0.18kg		0.17kg			0.36kg		0.8kg		3.3kg	4.0kg	27.5kg

Fine-tuning type

Model code		SC6F-02
Port size		10A
		Rc3/8
Effective sectional area	Max.controlled flow	0.8㎟
	Free flow	12.5㎟
Operating pressure		0.05 ～ 0.7MPa
Proof pressure		1.05MPa
Cracking pressure		0.05MPa 以下
Operating temperature		See Model Code section.
Mass		0.18kg

● For specifications other than those listed above,please contact us.

Operation

Standard type SC6 — 04 — 15A

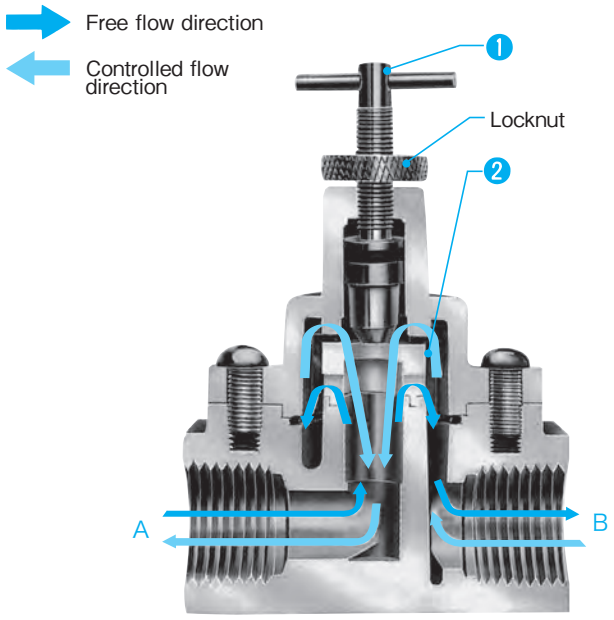

❶ Adjusting screw

【In the case of SC6-02, SC6-04 and SC6-06】

With controlled flow,turning the handle clockwise reduces the flow ; turning it counterclockwise increases it.

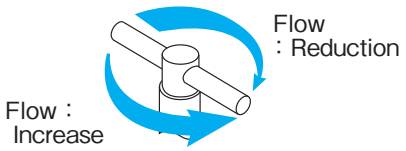

※ In the case of SC6-08 and SC213, the reverse operations are performed.

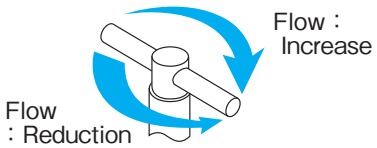

❷ Valve

Has the function of a check valve and is formed of synthetic rubber.For free flow,the valve is opened by air pressure from port A ; for controlled flow,it is closed by air pressure from port B.

Outside Dimensions

Standard and Fine-tuning type

SC6-02-8A・10A
SC6F-02-10A

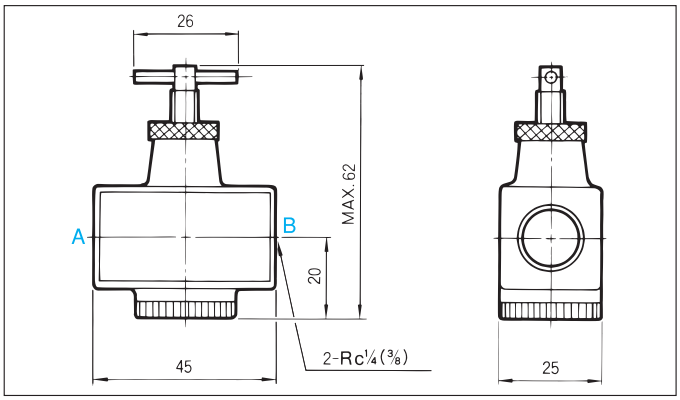

SC213-32A

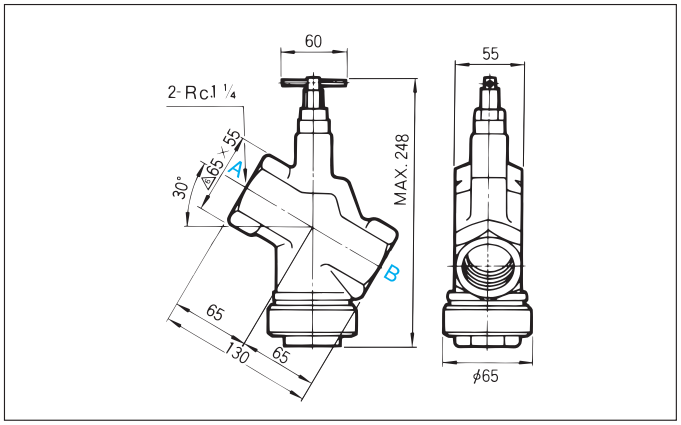

SC6-04-8A・10A・15A

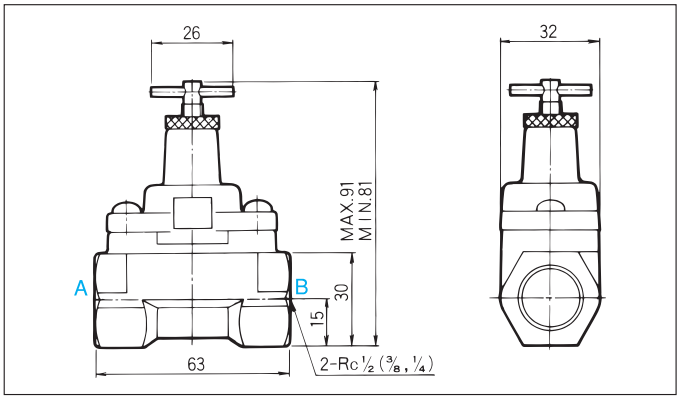

SC213-40A

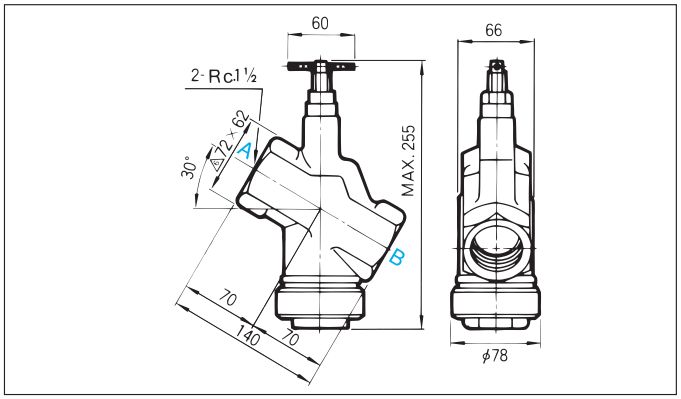

SC6-06-15A・20A

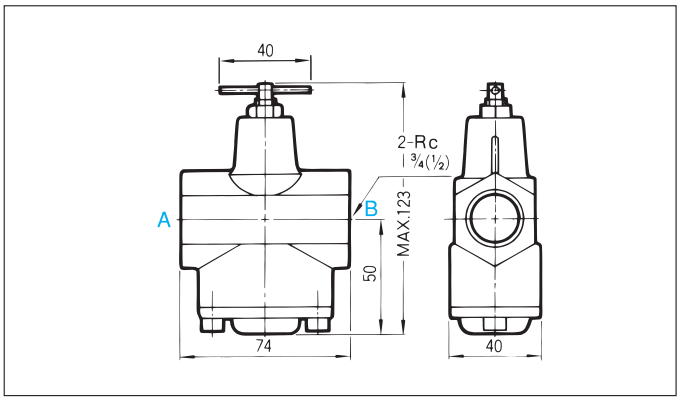

SC213-50A

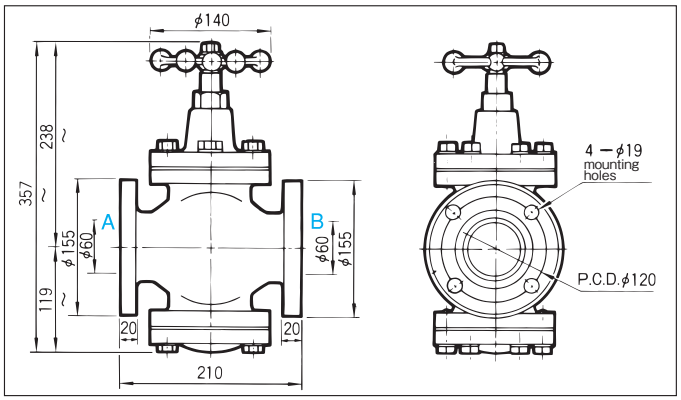

SC6-08-20A・25A

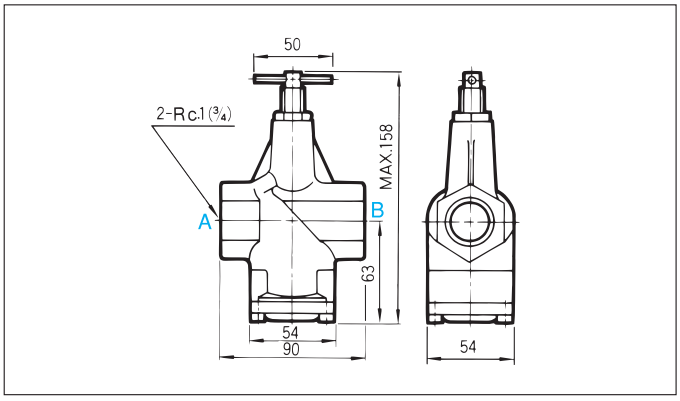

Performance Tables

Flow characteristics graphs for controlled (flow from ports B to A)

Standard type

SC6-02-8A・10A

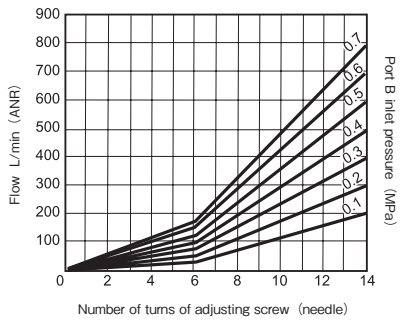

SC6-08-20A・25A

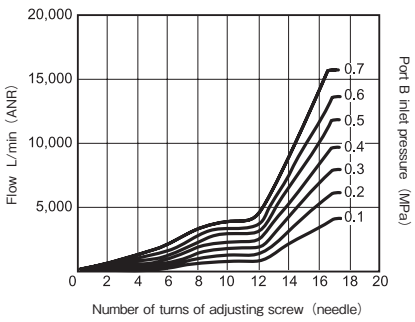

Fine-tuning type

SC6F-02-10A

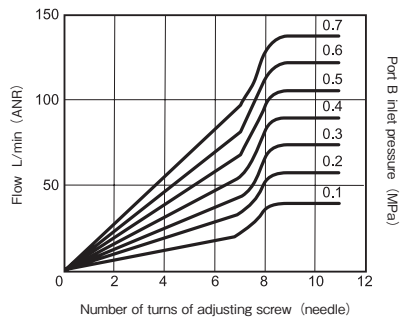

SC6-04-8A

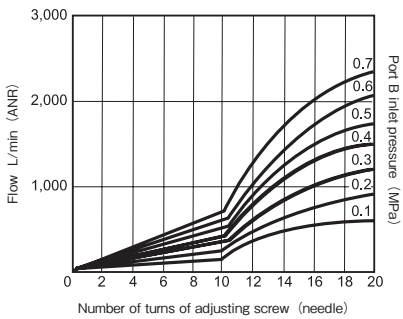

SC213-32A

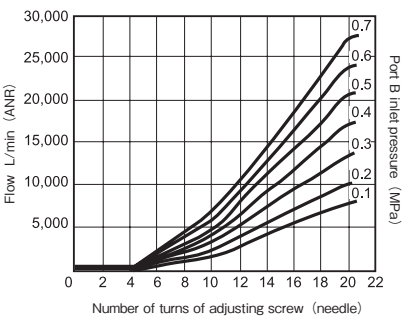

SC6-04-10A・15A

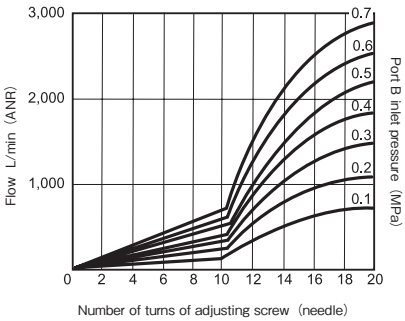

SC213-40A

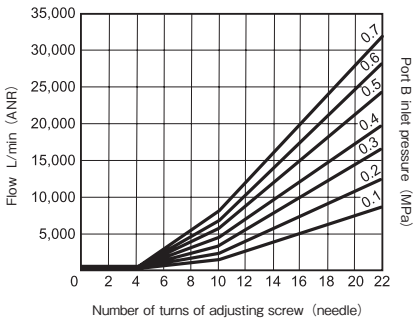

SC6-06-15A・20A

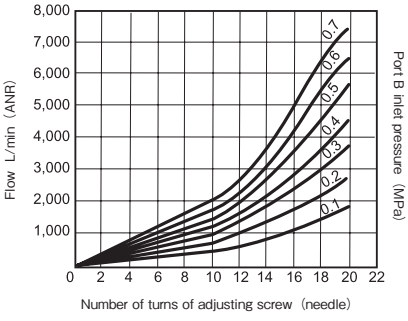

SC213-50A

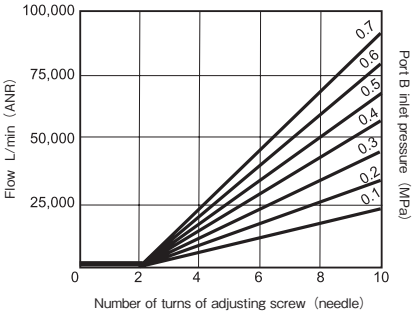

Performance Tables

Flow characteristics graphs for free flow (from ports A to B)

Standard and Fine-tuning type

SC6-02-8A・10A
SC6F-02-10A

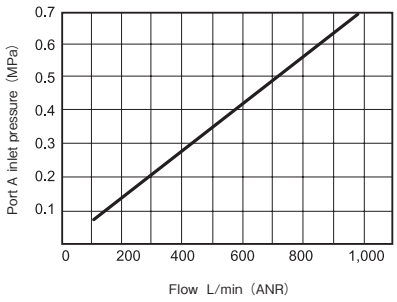

SC6-06-15A・20A

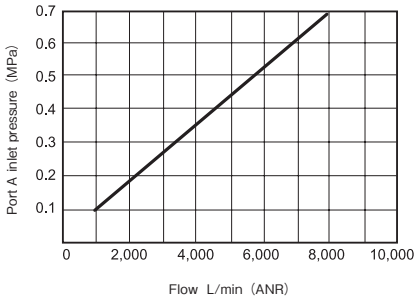

SC213-32A

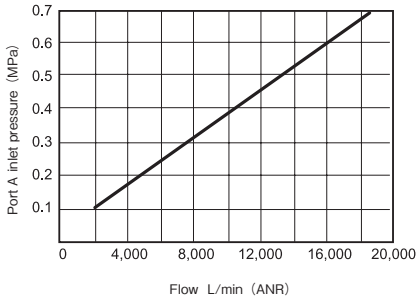

SC6-04-8A

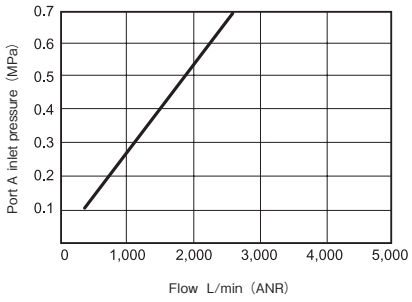

SC6-08-20A

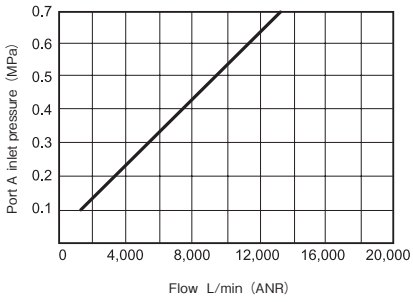

SC213-40A

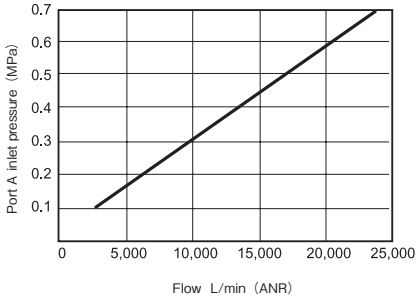

SC6-04-10A・15A

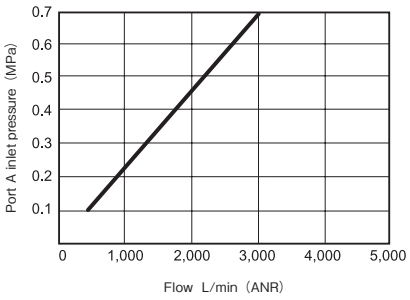

SC6-08-25A

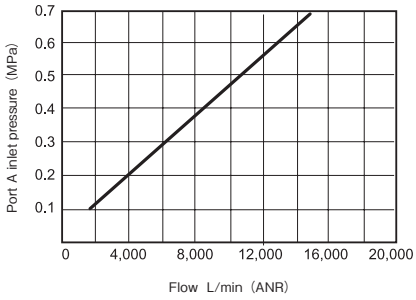

SC213-50A

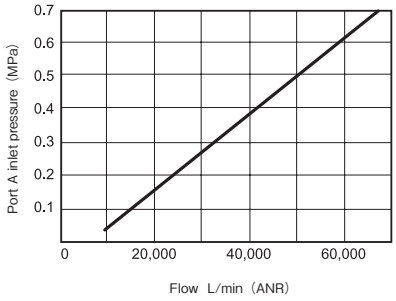

Operating Instructions

1 Fluid

- Since dirt,dust,wastes,etc. in the fluid may cause malfunctioning ,use only clean fluid.

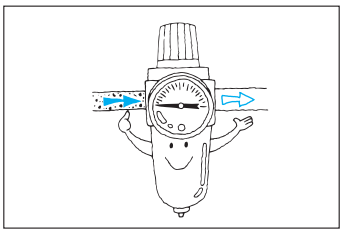

2 Circuit to be used

- In the most extensivery used speed control method,the speed controller is installed so that the exhaust flow from actuatars such as cylinders can be reduced (meter-out system).

- Sometimes,the speed controller is installed so that the supply flow to the actuator can be reduced (meter-in system).
  Generally speaking,the meter-out system provides a more stable speed control.

Meter-out system

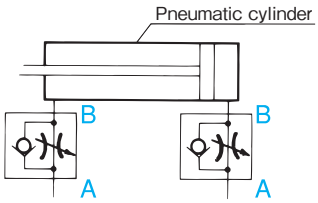

Omnidirectional,Screw Type
SPEED CONTROLLERS

SC7	Standard type	RC 1/8・1/4・3/8

This speed controller can be mounted directly on air cylinders.It is a compact,L-shaped design that can be connected to the pipe at any angle (360°) and is suitable for use in a meter-out system.

JIS Symbol

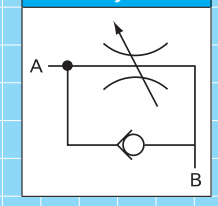

Model Code

When ordering,specify the model as follows:

SC7 – ①

● Port size

※ Port A = female Rc thread.
Port B = male R thread.

① Port size	
R.Rc1/8	06A
R.Rc1/4	08A
R.Rc3/8	10A

Specifications

Model code		SC7-06A	SC7-08A	SC7-10A
Port size		6A	8A	10A
		R1/8・Rc1/8	R1/4・Rc1/4	R3/8・Rc3/8
Effective sectional area	Max.controlled flow	5.5㎟	8.3㎟	14.0㎟
	Free flow	3.8㎟	11.0㎟	16.0㎟
Operating pressure		Max. 0.7MPa		
Proof pressure		1.05MPa		
Operating temperature		5～60℃		
Number of turns of needle valve available		8 turns		
Mass		0.04kg	0.07kg	0.1kg

Outside Dimensions

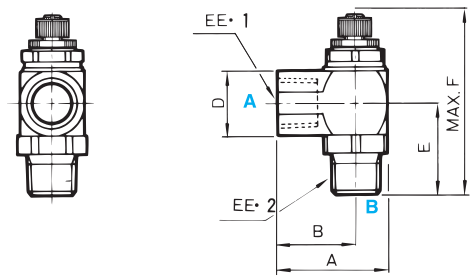

■ Dimensional Table

Units : mm

Model code	EE・1	EE・2	A	B	D	E	F	Mass
SC7-06A	Rc1/8	R1/8	25	18	□14	20	46.9	40g
SC7-08A	Rc1/4	R1/4	28	19.5	□17	24.5	54.3	70g
SC7-10A	Rc3/8	R3/8	31	21.5	□19	26.5	61	100g

Performance Tables

Flow characteristics graphs for controlled flow (from ports B to A)

SC7-06A

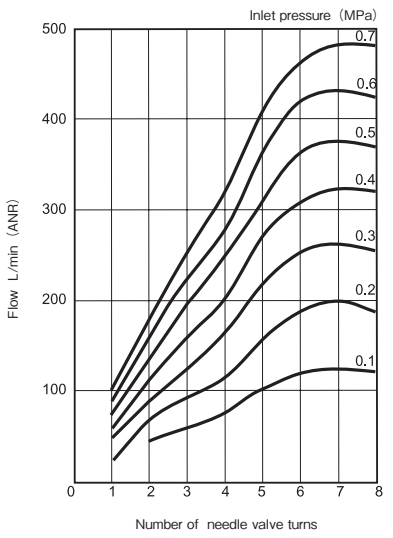

SC7-08A

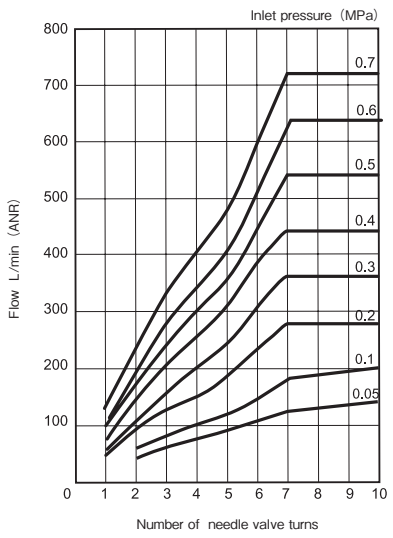

SC7-10A

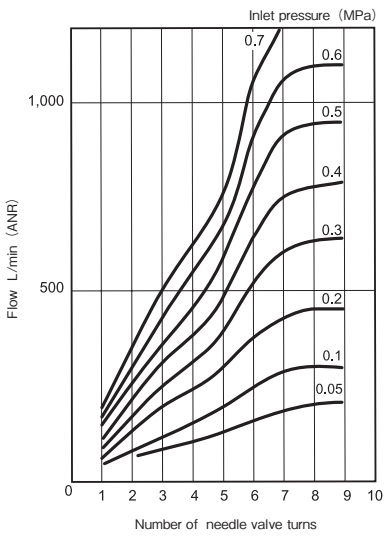

Performance Tables

Flow characteristics graphs for free flow (from ports A to B)

SC7-06A

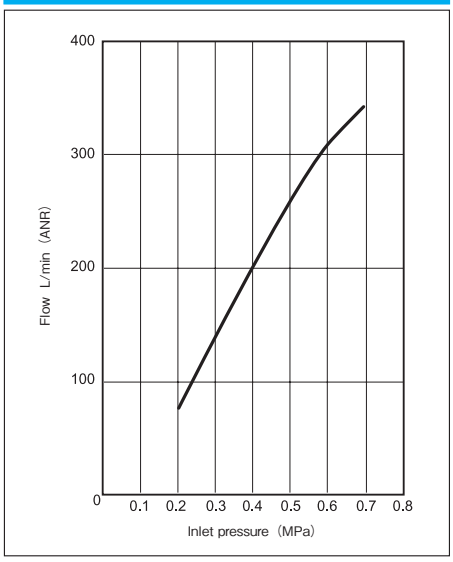

SC7-08A

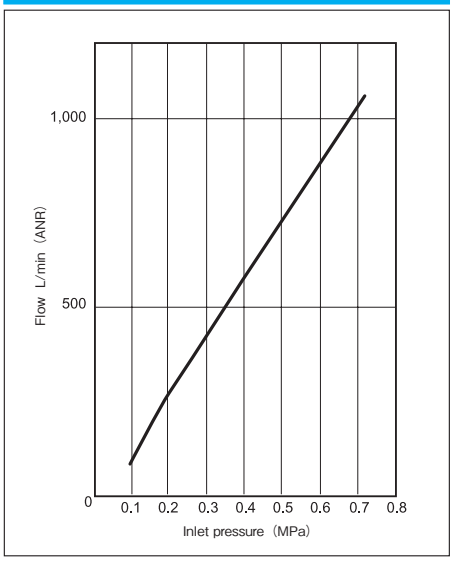

SC7-10A

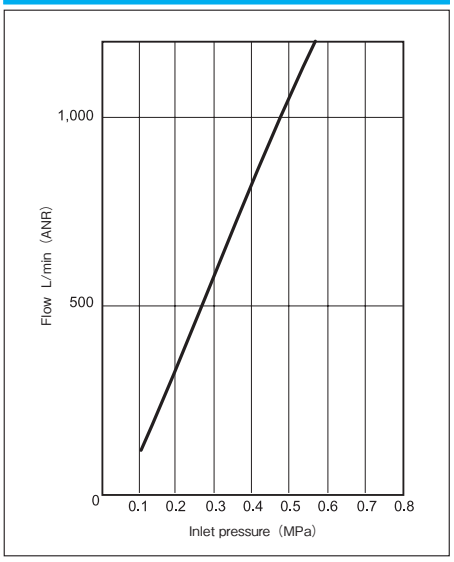

Operating Instructions

1 Fluid

- Since dirt,wastes,etc. in the fluid may cause malfunctioning.Use only clean fluids.

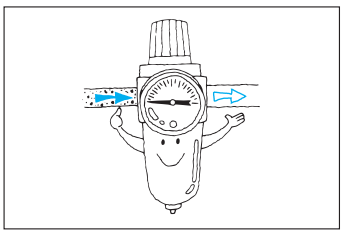

2 Piping

- Limit the number of threads screwed in the pipe connection of actuators,air cylinders, etc., to four or five sizes 6A to 10A (R1/8" to 3/8").
  If the controller is forced beyond that point,the mating device or the controller body will crack,causing trouble.

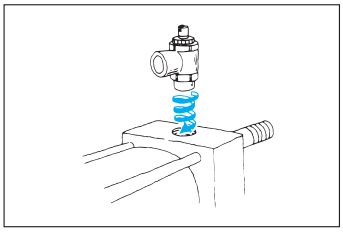

Free rotating,One-Step-On
SPEED CONTROLLERS

Standard miniature type	M3 × 0.5 · M5 × 0.8 · R1/8
B(Flexidle) miniature type	M3 × 0.5 · M5 × 0.8 · R1/8
Standard type	M5 × 0.8 · R1/8 · 1/4 · 3/8 · 1/2
B(Flexidle) type	M5 × 0.8 · R1/8 · 1/4 · 3/8 · 1/2

The speed controllers are available in two types,normal standard type with a freely rotating body,and a flexible type that permits tube connection at any angle.An extensive variety of pipe diameters (male thread sizes) are provided,ranging from the miniature type (M3-Rc1/8) to standard type (M5-Rc1/2) .

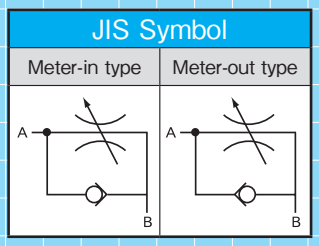

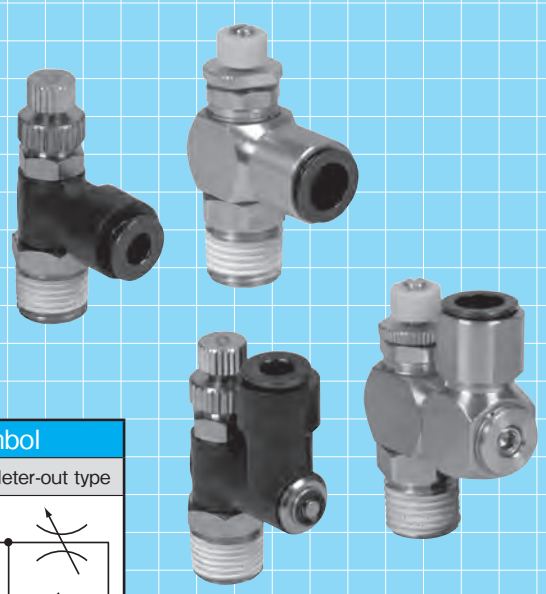

Features

Compact design
- The compact speed controllers come with a built-in "FUJI" touch connector.

Swivel threaded portion
- With the standard type,the body and threaded portion are free to rotate,allowing the tube to be connected at any angle.
  With the B type,the body and perpendicular portion rotate freely,permitting connection of the flexible tube at any angle.

Superior flow characteristics
- Fine tuning of the flow presents no difficulties,even in a low flow range.

A wide variety of tubing materials
- Choices available include polyurethane,polyamide,polyethylene and PTFE, depending on the application.

Optional indicator rings available in six colors
- The indicator rings allow visual distinction between lines in a complicated piping system for easy assembly and maintenance.

Missing needle preventive mechanism

Sealant-processed for connection screw port

Non-electrolytie plated finish for metal portion (miniature type)

Specifications

Model code	Same format for all types
Operating pressure	Max.0.7MPa
Proof pressure	1.05MPa
Operating temperature	5 ~ 60℃
Applicable tube material	Polyurethane , nylon , polyethylene , PTFE

Model Code

When ordering,specify the model as follows. Please order it by ten units.

Standard miniature type

M ❶ R – ❸ – ❻

- ❶ Applicable tube diameter
- ❸ Port size
- ❻ Type offlow system

B (Flexidle) miniature type

MB ❶ R – ❸ – ❻

- ❶ Applicable tube diameter
- ❸ Port size
- ❻ Type offlow system

Standard type

❷ ❺ – ❹ SC – ❻

- ❷ Applicable tube diameter
- ❺ Material for the body
- ❹ Port size
- ❻ Type offlow system

B (Flexidle) type

B ❷ ❺ – ❹ SC – ❻

- ❷ Applicable tube diameter
- ❺ Material for the body
- ❹ Port size
- ❻ Type offlow system

❶ Applicable tube diameter

4mm	4
6mm	6

❸ Port size

M3 × 0.5	M3
M5 × 0.8	M5
R1/8	01

- Please note that no M3 screws are manufactured for speed controllers with a 6mm tube size

❺ Material for the body

Metal	No entry
Resin	R

- Please note that no resin-made body is manufactured for speed controllers with a 4mm tube size.

❷ Applicable tube diameter

4mm	4
6mm	6
8mm	8
10mm	10
12mm	12

❹ Port size

M5 × 0.8	M5
R 1/8	01
R 1/4	02
R 3/8	03
R 1/2	04

❻ Type of flow system

Meter-in type	Locknut : Black plated finish 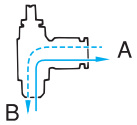	I
Meter-out type	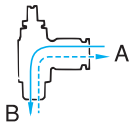	O

An example of model code

- Standard type
- Applicable tube size : 6mm
- Body material : Resin
- Thread size : R 1/4
- Type of flow system : Meter-in

6R-02SC-I

Construction/Outside Dimensions

Standard miniature type

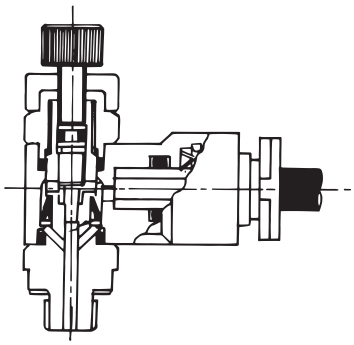

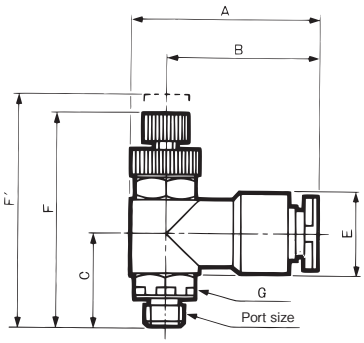

Dimensional Table

Model code		Port size	Applicable tube	Dimensions (mm)							Material for the body	Mass (g)
Meter-in type	Meter-out type			A	B	C	E	F	F'	G		
M4R-M3-I	M4R-M3-O	M3 × 0.5	TP-4・TN-4	25.2	20.7	13	φ11	29.1	31.5	8	Polyacetal・Metal	9.0
M4R-M5-I	M4R-M5-O	M5 × 0.8	TP-4・TN-4	25.2	20.7	14	φ11	30.1	32.5	8		10.0
M4R-01-I	M4R-01-O	R1/8	TP-4・TN-4	25.7	20.7	16.5	φ11	32.6	35	10		13.0
M6R-M5-I	M6R-M5-O	M5 × 0.8	TP-6・TN-6	27.7	23.2	15	φ13	30.1	32.5	8		11.5
M6R-01-I	M6R-01-O	R1/8	TP-6・TN-6	28.2	23.2	17.5	φ13	32.6	35	10		14.0

- "TP" of the applicable tube represents polyurethane and "TN" nylon.
- Dimension "G" represents the subtense of a hexagon.

Construction/Outside Dimensions

B (Flexidle) miniature type

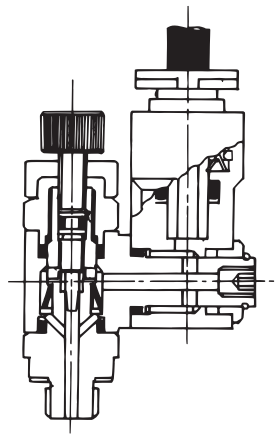

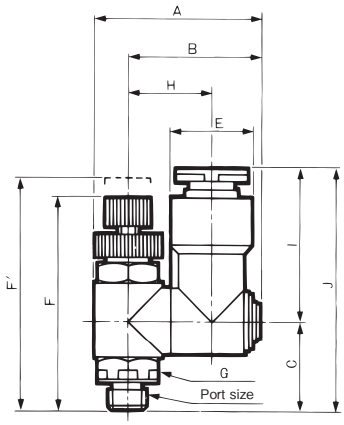

Dimensional Table

Model code		Port size	Applicable tube	Dimensions (mm)										Material for the body	Mass (g)
Meter-in type	Meter-out type			A	B	C	E	F	F'	G	H	I	J		
MB4R-M3-I	MB4R-M3-O	M3 × 0.5	TP-4・TN-4	21.9	17.4	12.5	φ11	29.1	31.5	8	11.3	20.7	33.2	Polyacetal・Metal	10.5
MB4R-M5-I	MB4R-M5-O	M5 × 0.8	TP-4・TN-4	21.9	17.4	13.5	φ11	30.1	32.5	8	11.3	20.7	34.2		11.5
MB4R-01-I	MB4R-01-O	R1/8	TP-4・TN-4	22.4	17.4	16	φ11	32.6	35	10	11.3	20.7	36.7		14.5
MB6R-M5-I	MB6R-M5-O	M5 × 0.8	TP-6・TN-6	23.3	18.8	13.5	φ13	30.1	32.5	8	12.3	23.2	36.7		12.5
MB6R-01-I	MB6R-01-O	R1/8	TP-6・TN-6	23.8	18.8	16	φ13	32.6	35	10	12.3	23.2	39.2		15.5

- "TP" of the applicable tube represents polyurethane and "TN" nylon.
- Dimension "G" represents the subtense of a hexagon.

Construction/Outside Dimensions

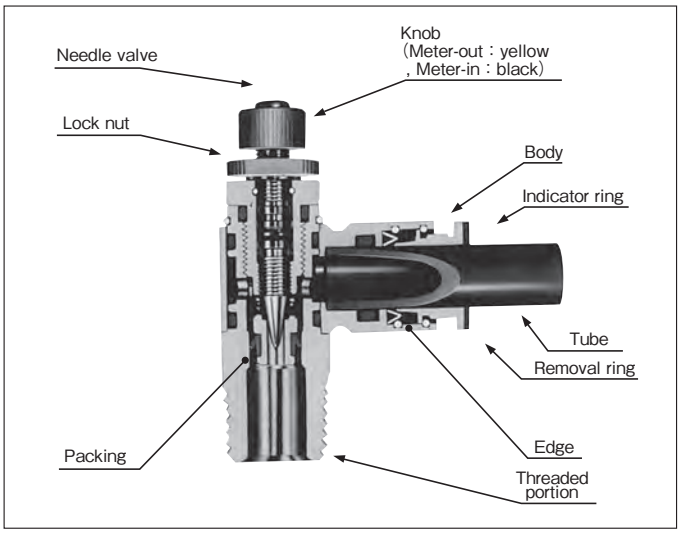

Standard type

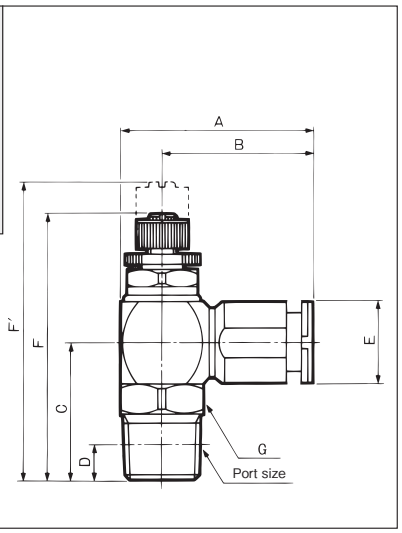

Dimensional Table

Model code		Port size	Applicable tube	Dimensions (mm)								Material for the body	Mass (g)
Meter-in type	Meter-out type			A	B	C	D	E	F	F'	G		
6R-M5SC-I	6R-M5SC-O	M5 × 0.8	TP-6・TN-6	29.7	23.2	16.4	–	φ13	36.2	39.3	12	Polyacetal・Metal	20.0
6R-01SC-I	6R-01SC-O	R1/8	TP-6・TN-6	29.7	23.2	19.5	4	φ13	39.3	42.4	12		22.0
6R-02SC-I	6R-02SC-O	R1/4	TP-6・TN-6	29.7	23.2	22.5	6	φ13	42.3	45.4	14		27.5
8R-01SC-I	8R-01SC-O	R1/8	TP-8・TN-8	33.6	26.1	20.5	4	φ15	41.9	46.9	14		30.5
8R-02SC-I	8R-02SC-O	R1/4	TP-8・TN-8	33.6	26.1	23.5	6	φ15	44.9	49.9	14		35.5
8R-03SC-I	8R-03SC-O	R3/8	TP-8・TN-8	33.6	26.1	24.5	6.5	φ15	45.9	50.9	17		43.0
10R-02SC-I	10R-02SC-O	R1/4	TP-10・TN-10	37.1	28.1	24.5	6	φ17	48.3	54.3	17		51.0
10R-03SC-I	10R-03SC-O	R3/8	TP-10・TN-10	37.1	28.1	25.5	6.5	φ17	49.3	55.3	17		58.0
10R-04SC-I	10R-04SC-O	R1/2	TP-10・TN-10	37.1	28.1	29.5	8	φ17	53.3	59.3	21		76.0
12R-03SC-I	12R-03SC-O	R3/8	TP-12・TN-12	41.1	30.6	27	6.5	φ20	52	61	19		75.0
12R-04SC-I	12R-04SC-O	R1/2	TP-12・TN-12	41.1	30.6	31	8	φ20	56	65	21		93.0
4-M5SC-I	4-M5SC-O	M5 × 0.8	TP-4・TN-4	28.1	22.1	15.9	–	φ11	36.2	39.3	12	Metal	28.0
4-01SC-I	4-01SC-O	R1/8	TP-4・TN-4	28.1	22.1	19	4	φ11	39.3	42.4	12		30.5
6-M5SC-I	6-M5SC-O	M5 × 0.8	TP-6・TN-6	29.2	23.2	15.9	–	□12	36.2	39.3	12		29.5
6-01SC-I	6-01SC-O	R1/8	TP-6・TN-6	29.2	23.2	19	4	□12	39.3	42.4	12		32.0
6-02SC-I	6-02SC-O	R1/4	TP-6・TN-6	29.2	23.2	22	6	□12	42.3	45.4	14		37.5
8-01SC-I	8-01SC-O	R1/8	TP-8・TN-8	32.6	25.6	20	4	□14	41.9	46.9	14		44.0
8-02SC-I	8-02SC-O	R1/4	TP-8・TN-8	32.6	25.6	23	6	□14	44.9	49.9	14		48.5
8-03SC-I	8-03SC-O	R3/8	TP-8・TN-8	32.6	25.6	24	6.5	□14	45.9	50.9	17		56.5
10-02SC-I	10-02SC-O	R1/4	TP-10・TN-10	36.6	28.1	24.5	6	□17	48.3	54.3	17		74.0
10-03SC-I	10-03SC-O	R3/8	TP-10・TN-10	36.6	28.1	25.5	6.5	□17	49.3	55.3	17		81.0
10-04SC-I	10-04SC-O	R1/2	TP-10・TN-10	36.6	28.1	29.5	8	□17	53.3	59.3	21		99.0
12-03SC-I	12-03SC-O	R3/8	TP-12・TN-12	40.1	30.6	26.5	6.5	□19	52	61	19		105.5
12-04SC-I	12-04SC-O	R1/2	TP-12・TN-12	40.1	30.6	30.5	8	□19	56	65	21		123.0

● "TP" of the applicable tube represents polyurethane and "TN" nylon.

Construction/Outside Dimensions

B (Flexidle) type

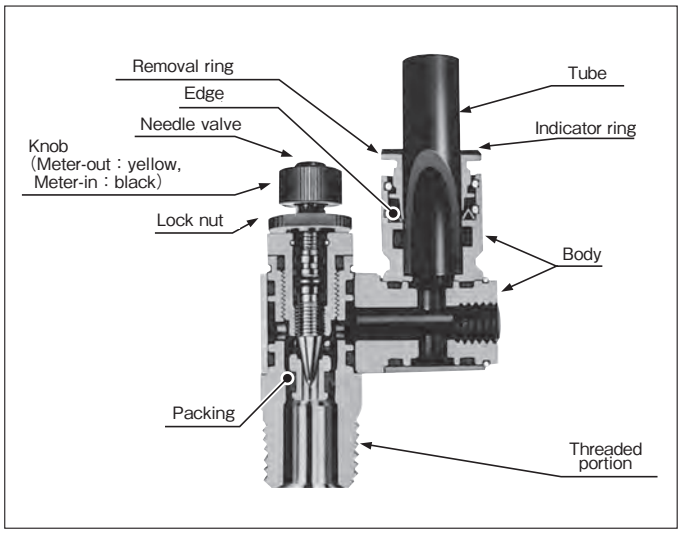

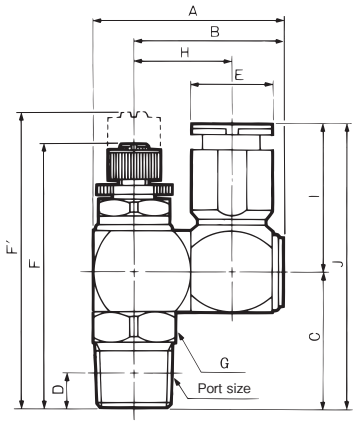

Dimensional Table

Model code		Port size	Applicable tube	各部サイズ（mm）											Material for the body	Mass（g）
Meter-in type	Meter-out type			A	B	C	D	E	F	F'	G	H	I	J		
B6R-M5SC-I	B6R-M5SC-O	M5 × 0.8	TP-6・TN-6	28.5	22	15.9	–	φ13	36.2	39.3	12	14.5	23.2	39.1	Polyacetal・Metal	22.5
B6R-01SC-I	B6R-01SC-O	R1/8	TP-6・TN-6	28.5	22	19	4	φ13	39.3	42.4	12	14.5	23.2	42.2		25.0
B6R-02SC-I	B6R-02SC-O	R1/4	TP-6・TN-6	28.5	22	22	6	φ13	42.3	45.4	14	14.5	23.2	45.2		30.5
B8R-01SC-I	B8R-01SC-O	R1/8	TP-8・TN-8	33	25.5	20	4	φ15	41.9	46.9	14	17	26.1	46.1		34.5
B8R-02SC-I	B8R-02SC-O	R1/4	TP-8・TN-8	33	25.5	23	6	φ15	44.9	49.9	14	17	26.1	49.1		39.5
B8R-03SC-I	B8R-03SC-O	R3/8	TP-8・TN-8	33	25.5	24	6.5	φ15	45.9	50.9	17	17	26.1	50.1		47.5
B10R-02SC-I	B10R-02SC-O	R1/4	TP-10・TN-10	39.9	30.9	24.5	6	φ17	48.3	54.3	17	20.2	28.1	52.6		58.5
B10R-03SC-I	B10R-03SC-O	R3/8	TP-10・TN-10	39.9	30.9	25.5	6.5	φ17	49.3	55.3	17	20.2	28.1	53.6		65.0
B10R-04SC-I	B10R-04SC-O	R1/2	TP-10・TN-10	39.9	30.9	29.5	8	φ17	53.3	59.3	21	20.2	28.1	57.6		83.5
B12R-03SC-I	B12R-03SC-O	R3/8	TP-12・TN-12	43.4	32.9	26.5	6.5	φ20	52	61	19	21.7	30.6	57.1		85.5
B12R-04SC-I	B12R-04SC-O	R1/2	TP-12・TN-12	43.4	32.9	30.5	8	φ20	56	65	21	21.7	30.6	61.1		103.5
B4-M5SC-I	B4-M5SC-O	M5 × 0.8	TP-4・TN-4	28	22	15.9	–	φ11	36.2	39.3	12	14	22.1	38	Metal	42.0
B4-01SC-I	B4-01SC-O	R1/8	TP-4・TN-4	28	22	19	4	φ11	39.3	42.4	12	14	22.1	41.1		44.5
B6-M5SC-I	B6-M5SC-O	M5 × 0.8	TP-6・TN-6	28	22	15.9	–	□12	36.2	39.3	12	14	23.2	39.1		43.5
B6-01SC-I	B6-01SC-O	R1/8	TP-6・TN-6	28	22	19	4	□12	39.3	42.4	12	14	23.2	42.2		45.5
B6-02SC-I	B6-02SC-O	R1/4	TP-6・TN-6	28	22	22	6	□12	42.3	45.4	14	14	23.2	45.2		51.5
B8-01SC-I	B8-01SC-O	R1/8	TP-8・TN-8	32.5	25.5	20	4	□14	41.9	46.9	14	16.5	25.6	45.6		65.5
B8-02SC-I	B8-02SC-O	R1/4	TP-8・TN-8	32.5	25.5	23	6	□14	44.9	49.9	14	16.5	25.6	48.6		70.5
B8-03SC-I	B8-03SC-O	R3/8	TP-8・TN-8	32.5	25.5	24	6.5	□14	45.9	50.9	17	16.5	25.6	49.6		78.0
B10-02SC-I	B10-02SC-O	R1/4	TP-10・TN-10	39.4	30.9	24.5	6	□17	48.3	54.3	17	20.2	28.1	52.6		112.5
B10-03SC-I	B10-03SC-O	R3/8	TP-10・TN-10	39.4	30.9	25.5	6.5	□17	49.3	55.3	17	20.2	28.1	53.6		119.0
B10-04SC-I	B10-04SC-O	R1/2	TP-10・TN-10	39.4	30.9	29.5	8	□17	53.3	59.3	21	20.2	28.1	57.6		137.0
B12-03SC-I	B12-03SC-O	R3/8	TP-12・TN-12	42.4	32.9	26.5	6.5	□19	52	61	19	21.2	30.6	57.1		153.5
B12-04SC-I	B12-04SC-O	R1/2	TP-12・TN-12	42.4	32.9	30.5	8	□19	56	65	21	21.2	30.6	61.1		171.5

● "TP" of the applicable tube represents polyurethane and "TN" nylon.

Performance Tables

Flow characteristics graphs

Miniature type

For controlled flow

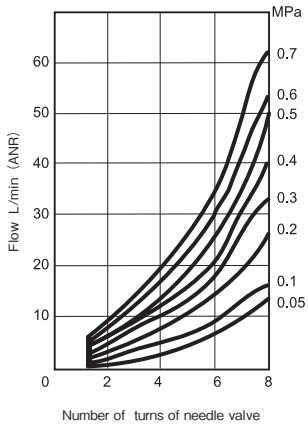

For free flow

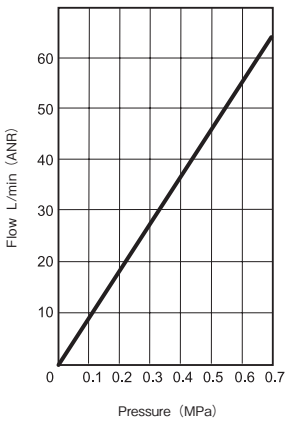

Tube size : 8mm

For controlled flow

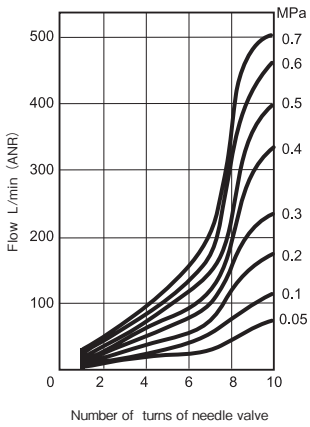

For free flow

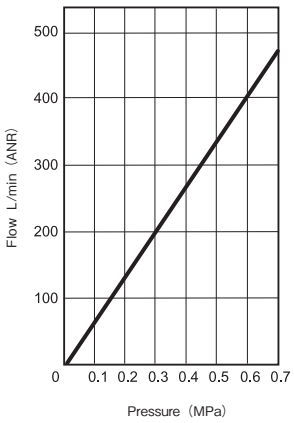

Tube size : 4mm

For controlled flow

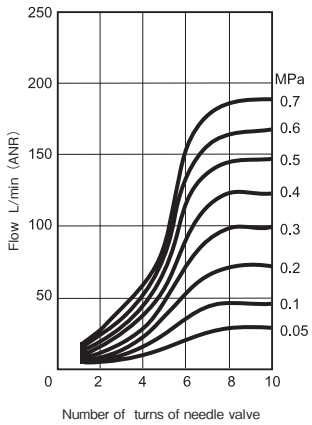

For free flow

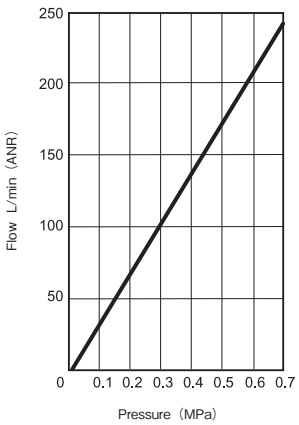

Tube size : 10mm

For controlled flow

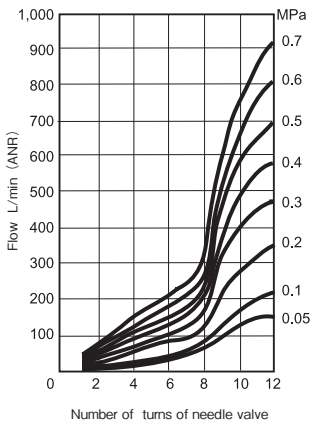

For free flow

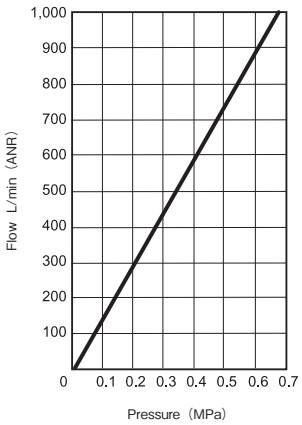

Tube size : 6mm

For controlled flow

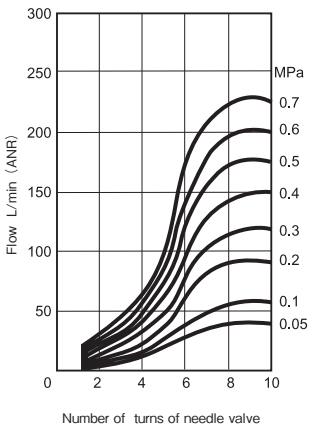

For free flow

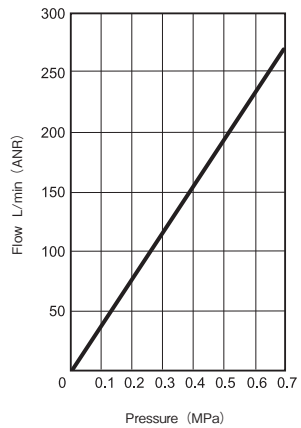

Tube size : 12mm

For controlled flow

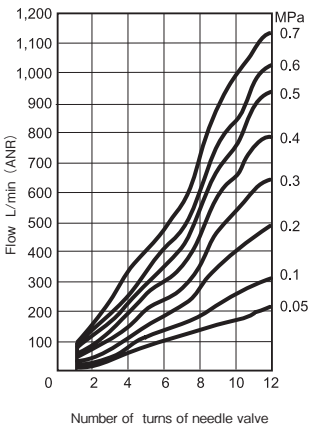

For free flow

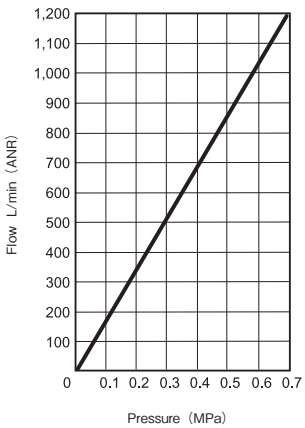

CHECK VALVES

CV3・CV1	Standard type	RC 1/4 ~ 2

The check valve permits only one-way air flow and prevents reverse flow.Konan's check valves are designed for low cracking pressure and very low resistance to air.

JIS Symbol

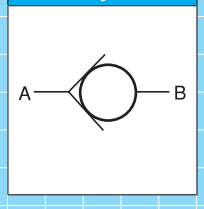

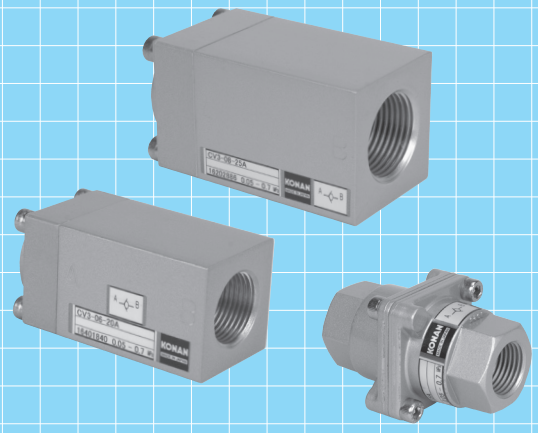

Model Code

When ordering,specify the model as follows:

Standard type

Rc 1/4 ~ 1/2	CV3 ❶ -04 - ❷ - ❹
Rc 3/4	CV3 ❶ -06 - 20A - ❹
Rc 1	CV3 ❶ -08 - 25A - ❹
Rc 1_1/4 ~ 2	CV1 - ❸

❶ Corrosion-resistant
❷ Port size
❹ Operating temperature range

❶ Corrosion-resistant

- Portions that are exposed to outside weather conditions are corrosion-resistant coating and the exposed bolts and nuts are stainless steel.

Standard	No entry
Corrosion-resistant type	S

❷ Port size

Rc1/4	8A
Rc3/8	10A
Rc1/2	15A

❸ Port size

Rc1_1/4	32A
Rc1_1/2	40A
Rc 2	50A

❹ Operating temperature range

General purpose	− 20 ~ 60℃	No entry
Heat-resistant	5 ~ 100℃	HT
Freeze-resistant	− 40 ~ 45℃	LT

- For corrosion.freeze resistant type,allow some margin for delivery.
- In operating temperatures of 5℃ or less, provide adequate measures against freezing.

Specifications

Model code	CV3-04			CV3-06	CV3-08	CV1		
Port size	8A	10A	15A	20A	25A	32A	40A	50A
	Rc1/4	Rc3/8	Rc1/2	Rc3/4	Rc1	Rc1 1/4	Rc1 1/2	Rc2
Effective sectional area	40㎟	63㎟	94㎟	155㎟	210㎟	528㎟		1,007㎟
Operating pressure	0.05 ~ 0.7MPa					0.1 ~ 0.7MPa		
Cracking pressure	0.01MPa or less							
Proof pressure	1.05MPa							
Operating temperature	See Model Code section.					5 ~ 60℃		
Mass	0.13kg			0.27kg	0.45kg	1.0kg		2.2kg

- For specifications other than those listed above,please contact us.
- In the event of use in high bry air over dew point − 40℃ ,please contact us

Operation

Standard type CV3 — 04 — 15A

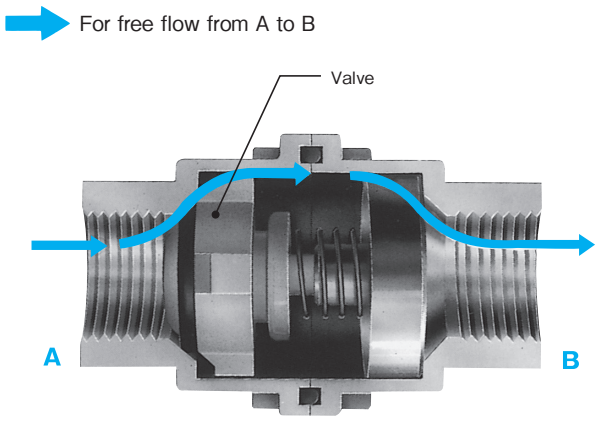

● For flow from ports A to B (free flow)

When air entering at port A exceeds the cracking pressure of the valve,the air forces the valve open and flows to port B.

● For flow from ports B to A (controlled flow)

The air pressure,together with the spring force,moves the valve in the closing direction,and th air entering port B is blocked.

Outside Dimensions

Standard type

CV3-04-8A・10A・15A

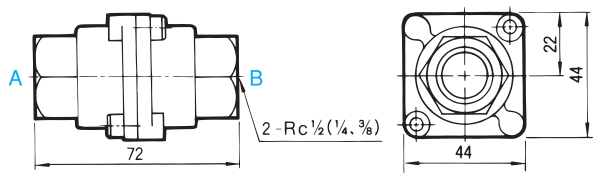

CV1-32A・40A

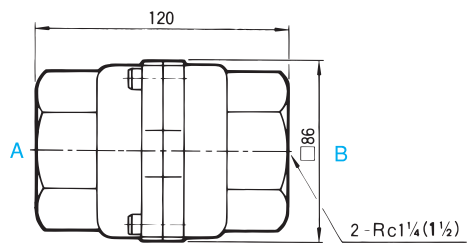

CV3-06-20A
CV3-08-25A

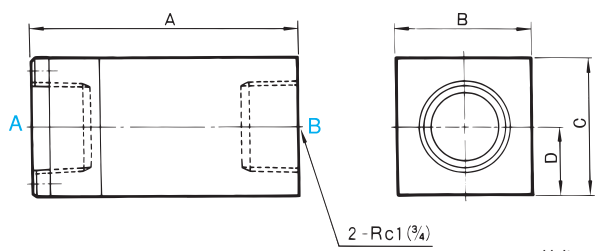

Units : mm

Size	20A	25A
A	80	95
B	40	50
C	40	50
D	20	25

CV1-50A

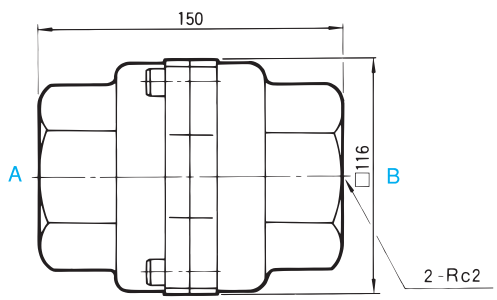

Performance Tables

Flow characteristics graphs (from ports A to B)

Standard type

CV3-04-8A

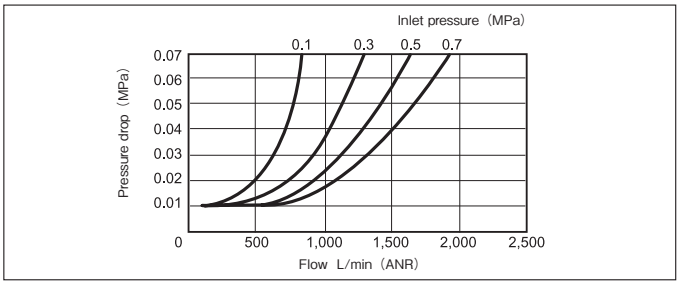

CV1-32A・40A

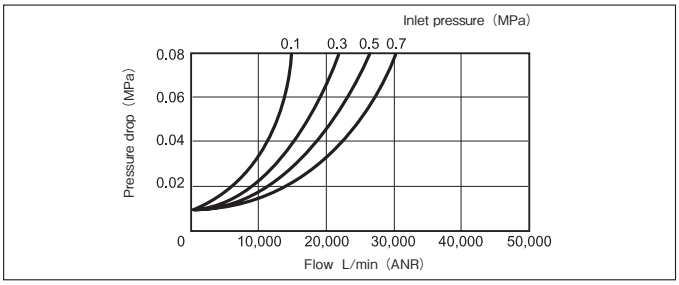

CV3-04-10A

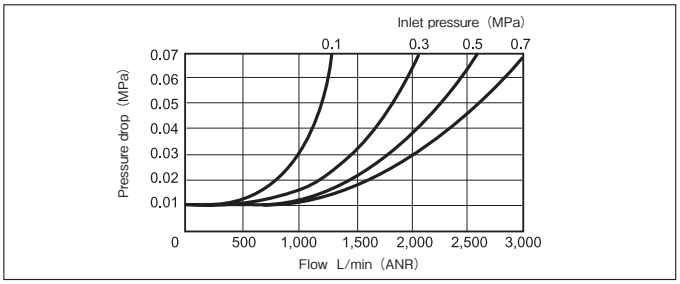

CV1-50A

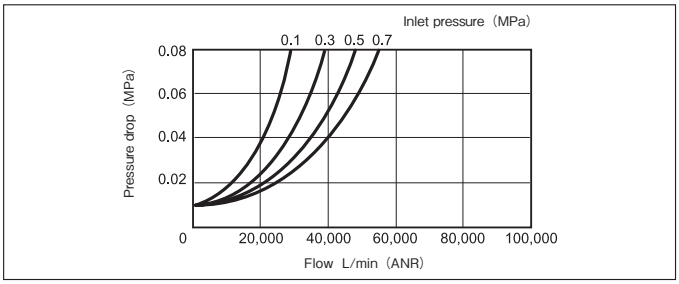

CV3-04-15A

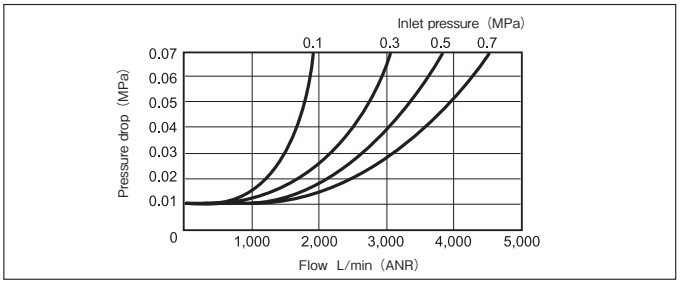

CV3-06-20A

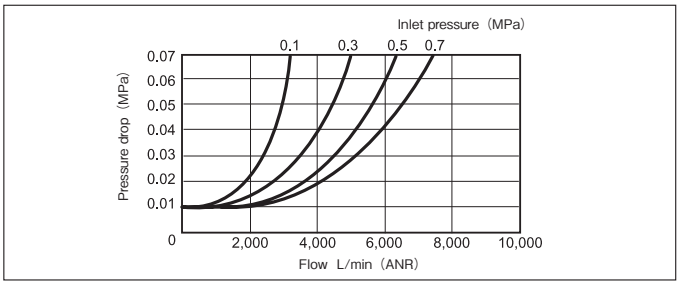

CV3-08-25A

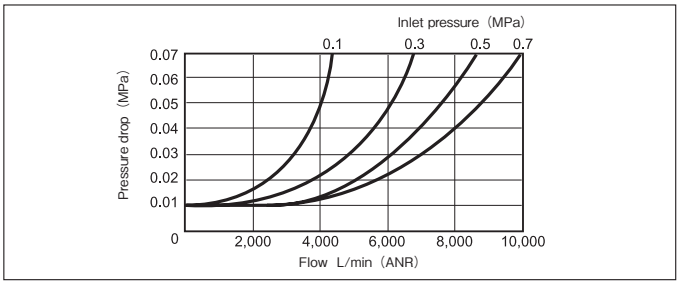

Operating Instructions

1 Varying pressures

- Note that for a low operating pressure,the flow is very small,and that for fluids that are subject to great pressure fluctuations, the valve may vibrate noticeably.

2 Fluid

- Dirt,wastes,etc. in the fluid may cause malfunctioning.Use only with clean fluids.

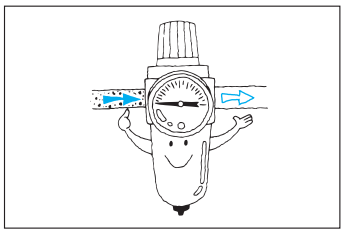

Pilot-Operated
CHECK VALVES

CVP2	Standard type	RC 3/8 ~ 1

This is a check valve with a check release (reverse flow) mechanism that is operated by a signal pressure.

JIS Symbol

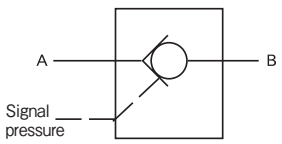

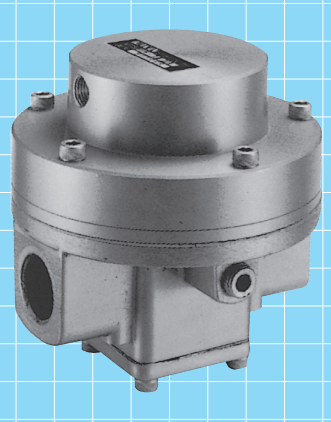

Model Code

When ordering,specify the model as follows:

Standard type

Rc 3/8 ~ 1/2 **CVP2 – 04 – ①**
● Port size

Rc 3/4 ~ 1 **CVP2 – 08 – ②**
● Port size

① Port size	
Rc3/8	10A
Rc1/2	15A

② Port size	
Rc3/4	20A
Rc1	25A

Specifications

Model code	CVP2-04		CVP2-08	
Port size	10A	15A	20A	25A
	Rc3/8	Rc1/2	Rc3/4	Rc1
Effective sectional area	30㎟	49㎟	83㎟	137㎟
Operating pressure	0.1 ~ 0.7MPa			
Signal pressure	0.12 ~ 0.7MPa Signal pressure ≧ Pressure of the fluid × 1/2			
Cracking pressure	0.01MPa or less			
Proof pressure	1.05MPa			
Operating temperature	–20 ~ 60℃ (For use below 5℃ ,provide adequate measures against freezing.)			
Mass	1.4kg		2.9kg	

● For specifications other than those listed above,please contact us.
● In the event of use in high dry air over dew point − 40℃ ,please contact us.

Outside Dimensions

Standard type

CVP2-04-10A・15A

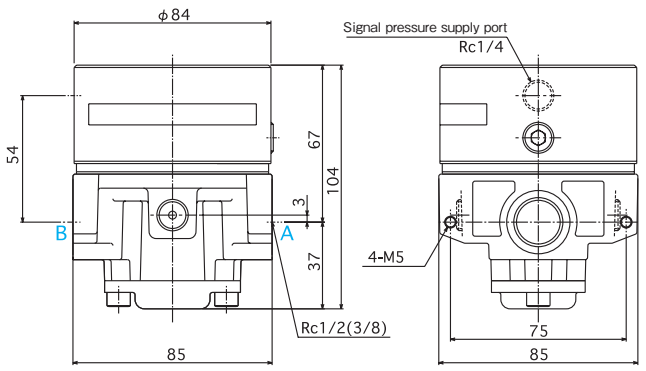

CVP2-08-20A・25A

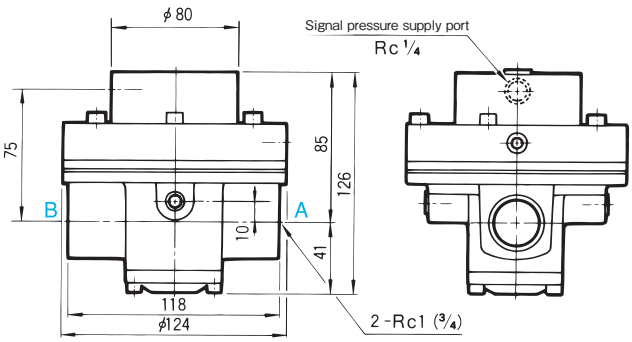

Performance Tables

Flow characteristics graphs (from ports A to B)

CVP2-04-10A

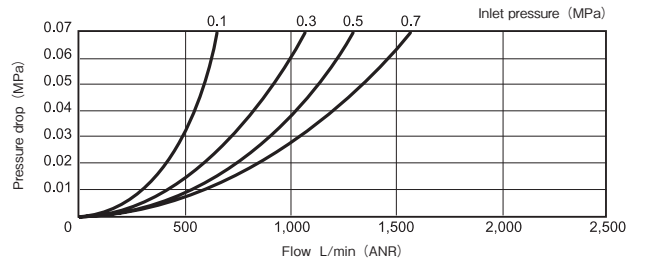

CVP2-08-25A

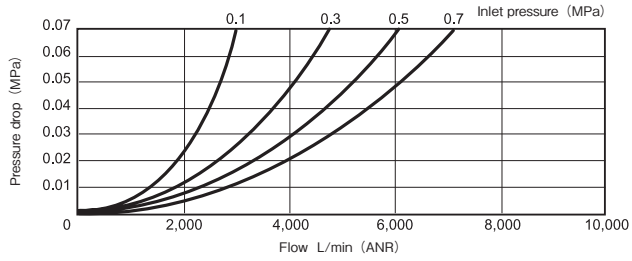

CVP2-04-15A

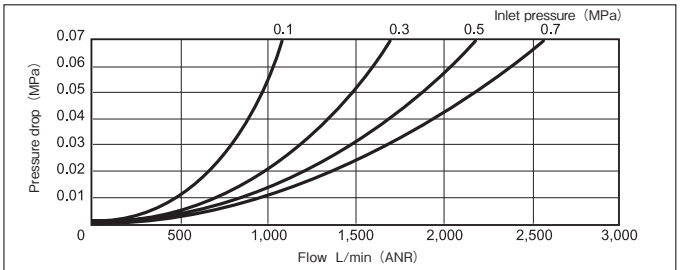

CVP2-08-20A

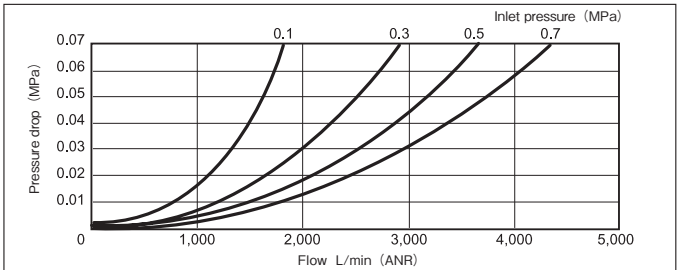

Operating Instructions

1 Varying pressures

- Note that for a low operating pressure,the flow is very small,and that for fluids that are subject to great pressure fluctuations, the valve may vibrate noticeably.

2 Fluid

- Dirt,wastes,etc. in the fluid may cause malfunctioning.Use only with clean fluids.

SHUTTLE VALVES

CVT3	Standard type	RC 1/4 ~ 1 1/2

A shuttle valve has two supply ports and one discharge port.When air pressure is admitted through one supply port,the other supply port is closed and the air pressure is transferred to the discharge port.

JIS Symbol

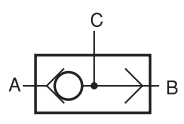

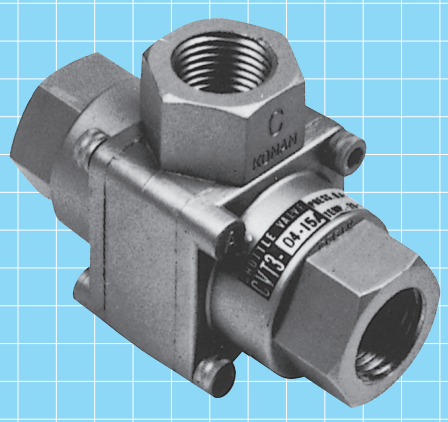

Model Code

When ordering,specify the model as follows:

Standard type

Rc 1/4 ~ 1/2

CVT3 ① -04- ② - ④ - ⑤

① Corrosion-resistant ② Port size ④ Operating temperature range ⑤ Bracket

Rc 3/4

CVT3 ① -06- 20A - ④

① Corrosion-resistant ④ Operating temperature range

Rc 1

CVT3 ① -08- 25A - ④

① Corrosion-resistant ④ Operating temperature range

Rc 1_1/4 ~ 1_1/2

CVT3 ① -14- ③

① Corrosion-resistant ③ Port size

① Corrosion-resistant

- Portions that are exposed to outside weather conditions are corrosion-resistant coating and the exposed bolts,nuts and brackets* are stainless steel.
  * The bracket is an option of only 04 size.

Standard	No entry
Corrosion-resistant type	S

② Port size

Rc1/4	8A
Rc3/8	10A
Rc1/2	15A

③ Port size

Rc1_1/4	32A
Rc1_1/2	40A

④ Operating temperature range

General purpose	– 20 ~ 60℃	No entry
Heat-resistant	5 ~ 100℃	HT
Freeze-resistant	– 40 ~ 45℃	LT

- For corrosion.freeze resistant type,allow some margin for delivery.
- In operating temperatures of 5℃ or less, provide adequate measures against freezing.

⑤ Bracket

Without	No entry
With	BR

- Bracket is not mounted but appended with valves.

Specifications

Model code	CVT3-04			CVT3-06	CVT3-08	CVT3-14	
Port size	8A	10A	15A	20A	25A	32A	40A
	Rc1/4	Rc3/8	Rc1/2	Rc3/4	Rc1	Rc1 1/4	Rc1 1/2
Effective sectional area	44㎟	65㎟	95㎟	116㎟	185㎟	350㎟	400㎟
Operating pressure	0.04 ~ 0.7MPa						
Proof pressure	1.05MPa						
Operating pressure differential	0.01MPa or more					0.02MPa or less	
Operating temperature	See Model Code section.					-20 ~ 60℃	
Mass	0.22kg			0.31kg	0.52kg	1.5kg	

- For specifications other than those listed above,please contact us.
- In the event of use in high bry air over dew point – 40℃ ,please contact us.

Operation

Standard type CVT3 — 04 — 15A

For a A to C flow

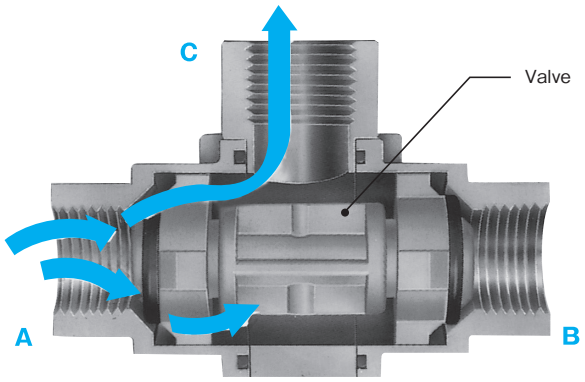

1. When air enters port A, it moves the valve and closes port B and then flows to port C.
2. When air enters port B,the air pressure from port B moves the valve and closes port A and then flows to port C.
   Be sure to place ports A and B in a discharge condition when air pressure is furnished via ports B and A,respectively.

Outside Dimensions

CVT3-04-8A・10A・15A

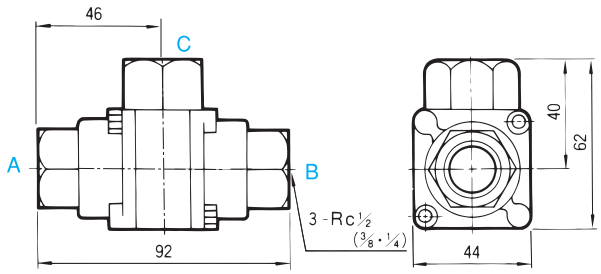

CVT3-06-20A
CVT3-08-25A
CVT3-14-32A・40A

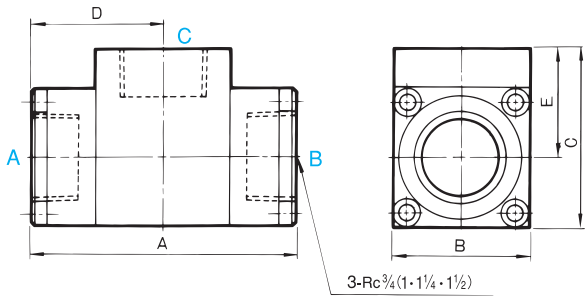

Units : mm

Size	20A	25A	32A	40A
A	80	100	140	140
B	40	50	70	70
C	55	65	85	85
D	40	50	70	70
E	35	40	50	50

Performance Tables

● Performance more than Rc1_1/4, contact us.

Flow characteristics graphs

Standard type

CVT3-04-8A

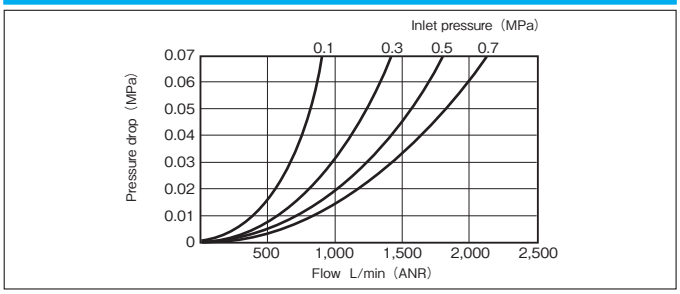

CVT3-04-10A

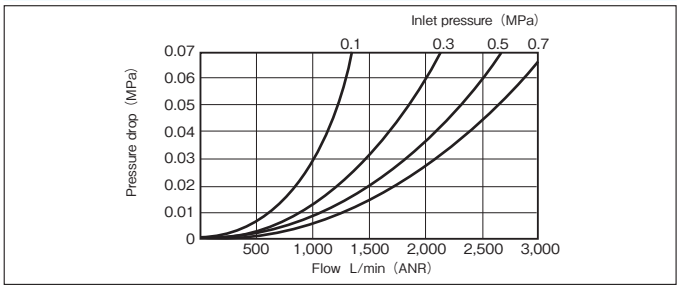

CVT3-04-15A

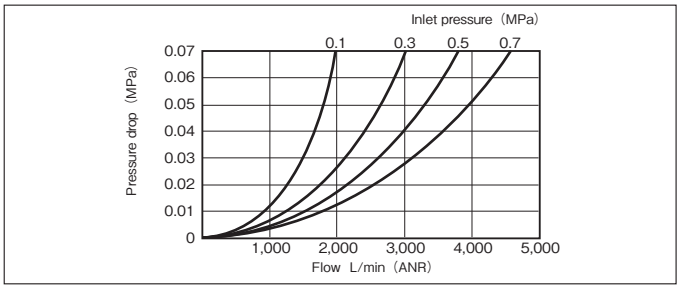

CVT3-06-20A

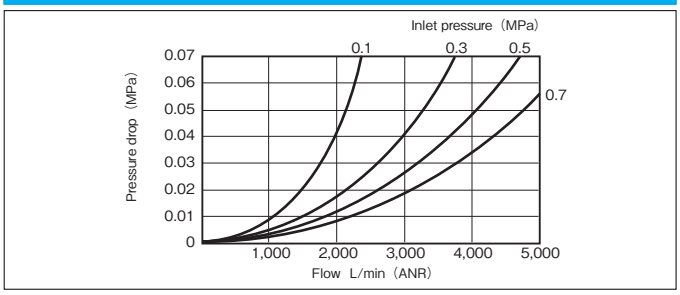

CVT3-08-25A

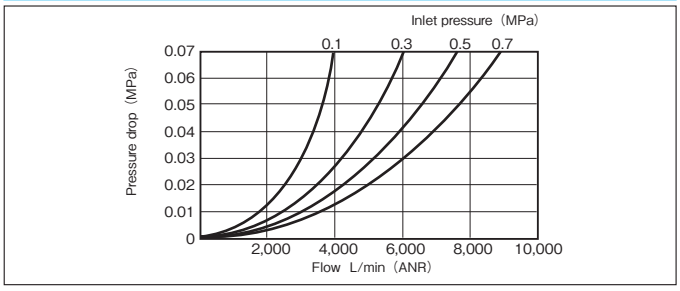

Operating Instructions

1 Varying pressures

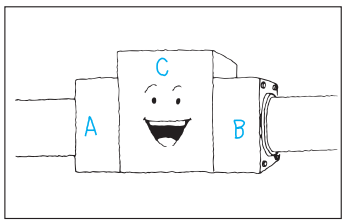

● Take care that ports A and B are level.

2 Fluid

● Use only with clean fluids,as,dirt,wastes,etc.in the fluid may cause malfunctioning.

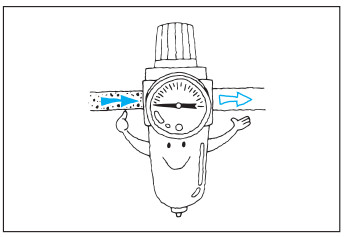

3 Piping

● Take care not to confuse the ports :

A····· Supply port
B····· Supply port
C····· Discharge port

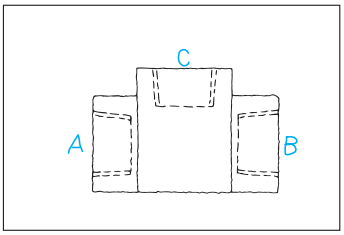

QUICK-RELEASE VALVES

QEV3・QEV3S	Standard type	RC 1/4 ~ 1

The quick-release valve is installed between directional control valves and actuators such as cylinders,and is operated by the discharge action of the directional control valve.It is used to further increase the discharge volume of the actuator for greater operating speed (up to 1.4 times).

JIS Symbol

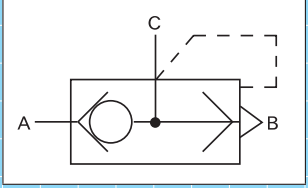

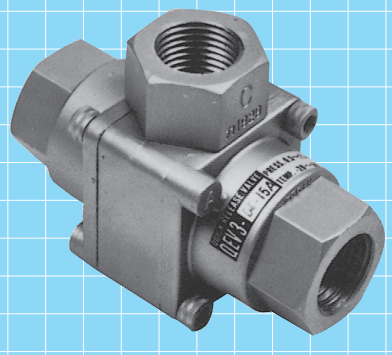

Model Code

When ordering,specify the model as follows:

Standard type

QEV3 ① -04- ②

- ① Corrosion-resistant
- ② Port size

QEV3 ① -06-20A- ③

- ① Corrosion-resistant
- ③ Operating temperature range

QEV3 ① -08-25A- ③

- ① Corrosion-resistant
- ③ Operating temperature range

① Corrosion-resistant

- Portions that are exposed to outside weather conditions are corrosion-resistant coating and the exposed bolts and nuts are stainless steel.

Standard	No entry
Corrosion-resistant type	S

② Port size

Rc 1/4	8A
Rc 3/8	10A
Rc 1/2	15A

③ Operating temperature range

General purpose	− 20 ~ 60℃	No entry
Heat-resistant	5 ~ 100℃	HT
Freeze-resistant	− 40 ~ 45℃	LT

- For corrosion.freeze resistant type,allow some margin for delivery.
- In operating temperatures of 5℃ or less, provide adequate measures against freezing.

Specifications

Model code		QEV3-04			QEV3-06	QEV3-08
Port size		8A	10A	15A	20A	25A
		Rc1/4	Rc3/8	Rc1/2	Rc3/4	Rc1
Effective sectional area	A → C	36㎟	59㎟	72㎟	133㎟	193㎟
	C → B	57㎟	81㎟	95㎟	150㎟	224㎟
Operating pressure		0.05 ~ 0.7MPa				
Proof pressure		1.05MPa				
Operating temperature		-20 ~ 60℃			See Model Code section.	
Mass		0.22kg			0.4kg	0.7kg

- For specifications other than those listed above,please contact us.
- In the event of use in high bry air over dew point − 40℃ ,please contact us.

Operation

Standard type QEV3 — 04 — 15A

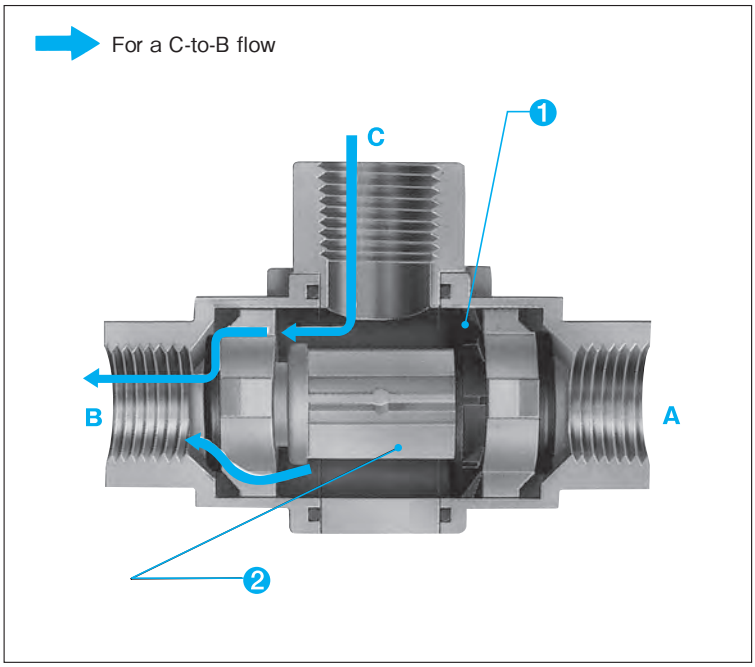

❶ Back packing

Air entering port A forces the back packing open and flows to port C.When the air from port A is discharged,air from port C closes the back packing and flows to port B.

❷ Valve

With an air pressure from port A, the valve is moved,closing port B, and the air flows to port C. When an pressure from port A is discharged through a directional control valve,the air pressure from port C pushes the back packing and moves the valve to port A. As a result, the air pressure from port C is quickly discharged through port B.

Outside Dimensions

QEV3-04-8A・10A・15A

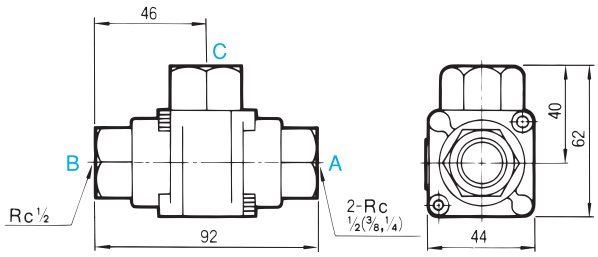

QEV3-06-20A
QEV3-08-25A

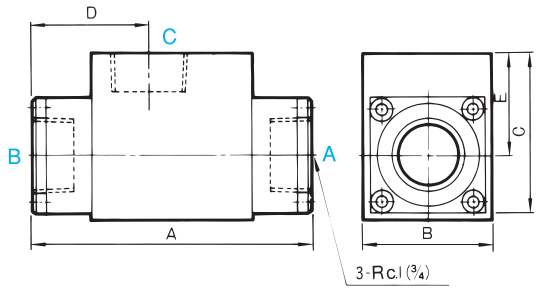

Units : mm

Size	20A	25A
A	100	120
B	46	56
C	60	70
D	40	50
E	37	42

Performance Tables

Flow characteristics graphs (from ports A to C)

QEV3-04-8A

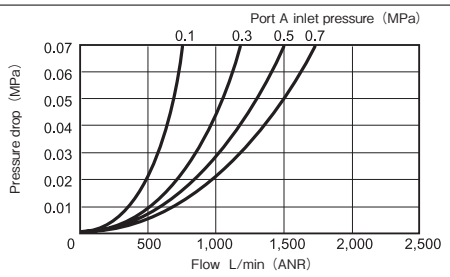

QEV3-04-10A

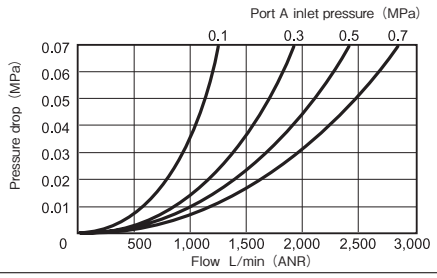

QEV3-04-15A

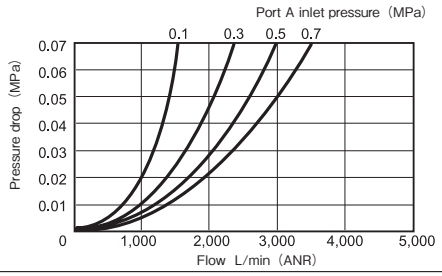

QEV3-06-20A

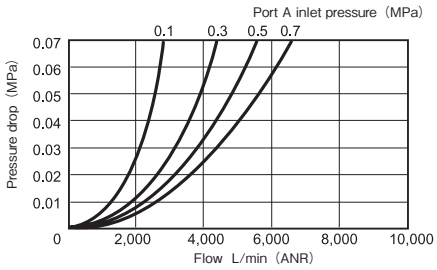

QEV3-08-25A

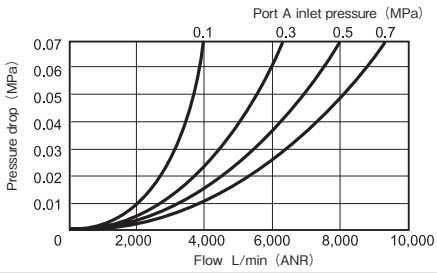

Flow characteristics graphs (from ports C to B)

QEV3-04-8A

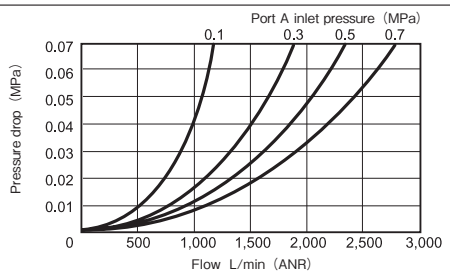

QEV3-04-10A

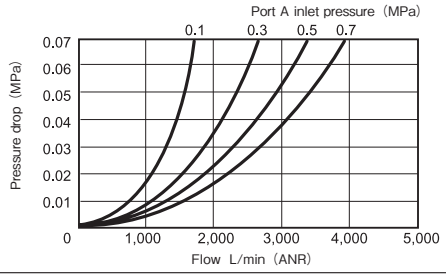

QEV3-04-15A

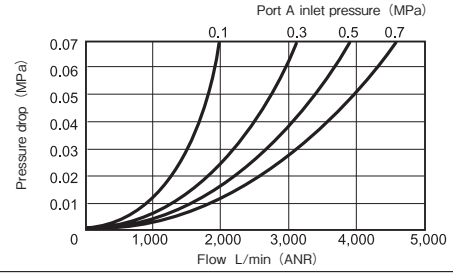

QEV3-06-20A

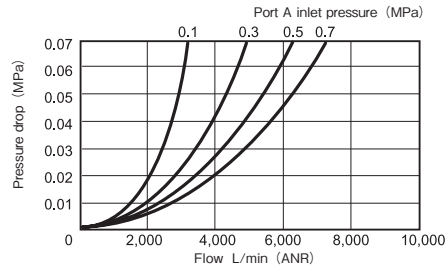

QEV3-08-25A

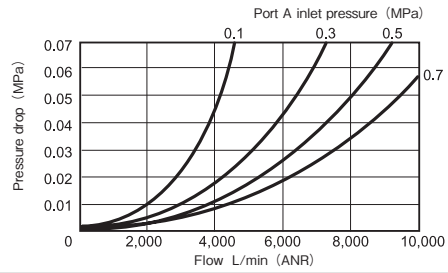

Operating Instructions

1 Installation

- Install as near to the actuator a possible.
- Use piping of as large a diameter as possible for the discharge pipe of the actuator.

2 Fluid

- Use only with clean fluids as dirt,wastes,etc. in the fluid may cause malfunctioning.

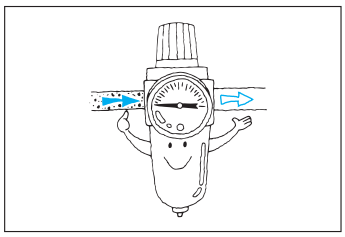

3 Piping

- Take care not to confuse the piping ports :

A····· For supply
B····· For discharge
C····· For actuator

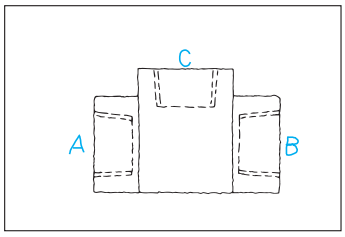

SAFETY BLOCK VALVES

CVD1	Standard type	RC 1/4 ~ 1

This is a safety line component that installed between three-position directional control valves and cylinders. It is used to ensure that the cylinder is held in the mid-position when stopped at the middle of its stroke. It protects equipments against accidents that may result from the cylinder unexpectedly moving from its middle stopping position.

JIS Symbol

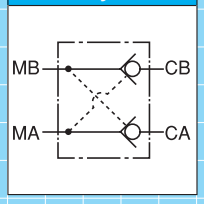

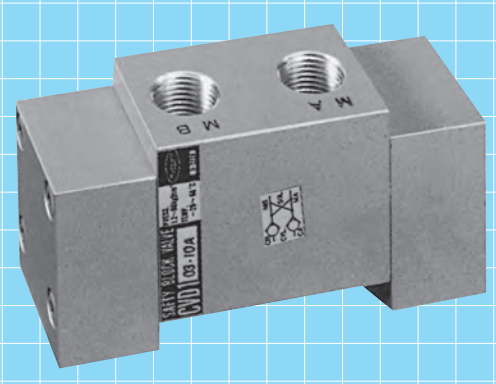

Model Code

When ordering,specify the model as follows:

Standard type

Rc 1/4 ~ 3/8 — **CVD1-03 – ①**
● Port size

Rc 3/8 ~ 1/2 — **CVD1-04 – ②**
● Port size

Rc 3/4 ~ 1 — **CVD1-08 – ③**
● Port size

① Port size	
Rc 1/4	8A
Rc 3/8	10A

② Port size	
Rc 3/8	10A
Rc 1/2	15A

③ Port size	
Rc 3/4	20A
Rc1	25A

Specifications

Model code	CVD1-03		CVD1-04		CVD1-08	
Port size	8A	10A	10A	15A	20A	25A
	Rc1/4	Rc3/8	Rc3/8	Rc1/2	Rc3/4	Rc1
Effective sectional area	30㎟	40㎟	70㎟	80㎟	200㎟	220㎟
Operating pressure	0.12 ~ 1.0MPa					
Cracking pressure	0.05MPa					
Proof pressure	1.5MPa					
Frequency of operations	2 cycle/s Max.					
Operating temperature	-20 ~ 60℃ (For use below 5℃ ,provide adequate measures against freezing.)					
Mass	0.4kg		0.9kg		2.0kg	

● For specifications other than those listed above,please contact us.
● In the event of use in high bry air over dew point − 40℃ ,please contact us.

Operation

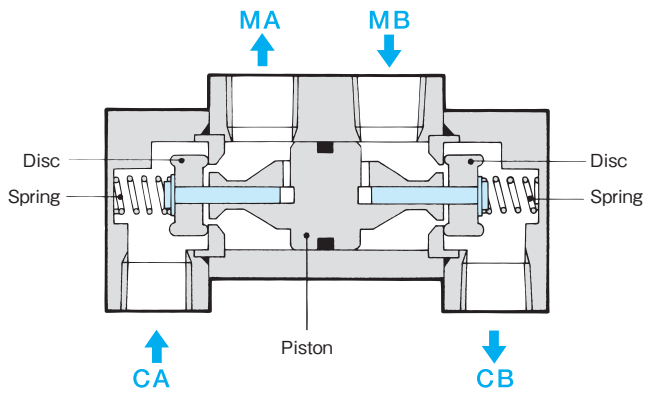

When a three-position,open-center type directional control valve,installed upstream of the safety block valve, is shifted to furnish an air pressure through port MA or MB, the disc and piston of the valve are moved by the air pressure to the left or to the right against the spring force. Ports MA and CA, or ports MB and CB are connected, and the cylinder is raised or lowered. When the directional control valves is shifted to its neutral position, the air pressure on the port MA or MB side is discharged, the disc is forced back by the spring to close the opening. With the poppet type, the discs prevent air leakage completely, and the cylinder is held at a given middle position for long periods.

Circuit Example

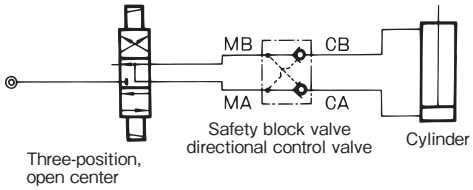

Outside Dimensions

CVD1-03-8A・10A
CVD1-04-10A・15A
CVD1-08-20A・25A

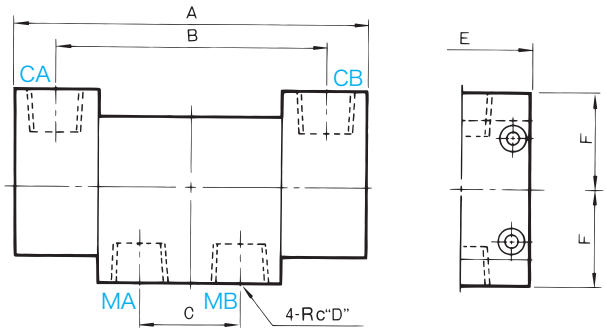

Units : mm

Model code	D	A	B	C	E	F
CVD1-03	1/4	110	82	32	36	25
	3/8					
CVD1-04	3/8	132	96	36	50	35
	1/2					
CVD1-08	3/4	202	152	60	60	45
	1					

Operating Instructions

1 Fluid

- Use with clean fluids only as dirt, wastes, etc. in the fluid may cause malfunctioning.

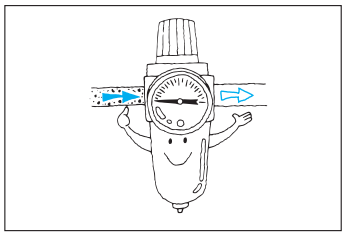

2 Piping

- Take care not to confuse the piping ports.

Port CA and CA
..... To cylinder

Port MA and MB
..... To directional control valve

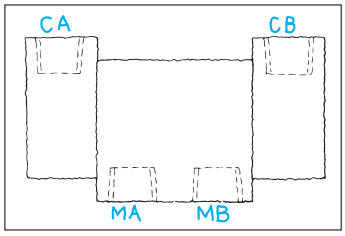

LOCKUP VALVES

LVS(D)5	Standard type	RC 1/4 · 3/8

This valve responds to abnormal drops in the supply air pressure in the pneumatic line,ensuring that the set pressure for the driven unit is maintained until the supply pressure returns to normal. It also locks the actuator to prevent unexpected movements if the supply pressure varies.

JIS Symbol

See Model Code section

Model Code

When ordering,specify the model as follows:

Standard type

Rc 1/4 · 3/8

LV ① 5 ② -02- ③ - ④

- ① Number of circuits
- ② Corrosion-resistant
- ③ Port size
- ④ Operating temperature range

① Number of circuits

One-circuit	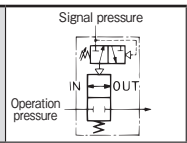	S
Two-circuit	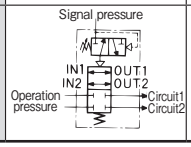	D

② Corrosion-resistant

- Portions that are exposed to outside weather conditions are corrosion-resistant coating and the exposed bolts,nuts and brackets are stainless steel.

Standard	No entry
Corrosion-resistant type	S

③ Port size

Rc 1/4	8A
Rc 3/8	10A

④ Operating temperature range

General purpose : − 20 ~ 60℃	No entry
Heat-resistant : 5 ~ 100℃	HT

Specifications

Model code		LVS5-02		LVD5-02	
Number of circuits		1		2	
Port size		8A	10A	8A	10A
		Rc1/4	Rc3/8	Rc1/4	Rc3/8
Effective sectional area		17㎟	22㎟	17㎟	22㎟
Operating pressure	Signal pressure	Max. 1.0MPa			
	Supply pressure	Max. 0.7MPa			
Pressure setting		0.14 ~ 0.7MPa			
Pressure differential		0.01MPa or less			
Proof pressure		1.5MPa			
Operating temperature		See model code section. (For use below 5℃ ,provide adequate measures against freezing.)			
Mass		0.6kg		1.0kg	

- For specifications other than those listed above,please contact us.
- In the event of use in high bry air over dew point − 40℃ ,please contact us.

Operation

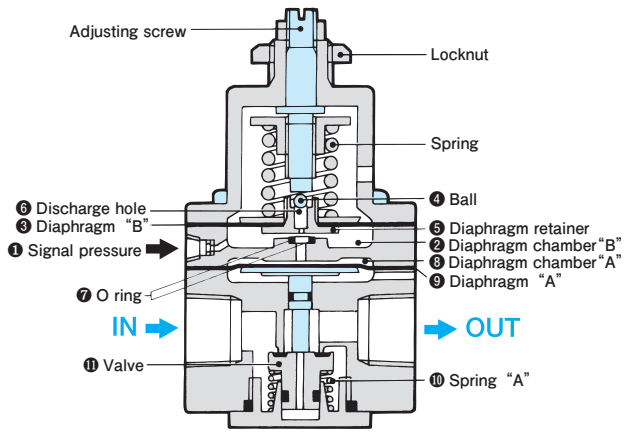

Signal pressure ❶ enters diaphragm chamber B ❷ and acts on diaphragm B ❸ . When the signal pressure exceeds the spring force,it pushes diaphragm B upwards and causes ball ❹ to close the discharge hole ❻ in the diaphragm retainer ❺ .At the same time, the signal pressure flows between diaphragm retainer ❺ and O ring ❼ to diaphragm chamber A ❽ .
It acts on diaphragm A (❾) and forces valve(⓫) open against the force of spring A (❿), thus completing the operating circuit.

If the signal pressure drops below the spring force for any reason,diaphragm B ❸ is forced down by the spring and at the same time that discharge hole ❻ in diaphragm retainer ❺ is opened, diaphragm chamber B in connected with diaphragm chamber A ❽ . Because of this, the signal pressure supplied to diaphragm chamber A ❽ is discharged through discharge hole ❻ . After the signal pressure in diaphragm chamber A ❽ has been discharged, the force of spring A ❿ closes the valve, and the operating circuit is closed off. Thus, the Pressure in the circuit is maintained.

With the two-circuit type (LVD5-02) ,circuits 1 and 2 are installed in parallel to each other, and diaphragm chambers A ❽ of each circuit are connected to each other.

Outside Dimensions

Standard type (1 circuit)

LVS5-02-8A・10A

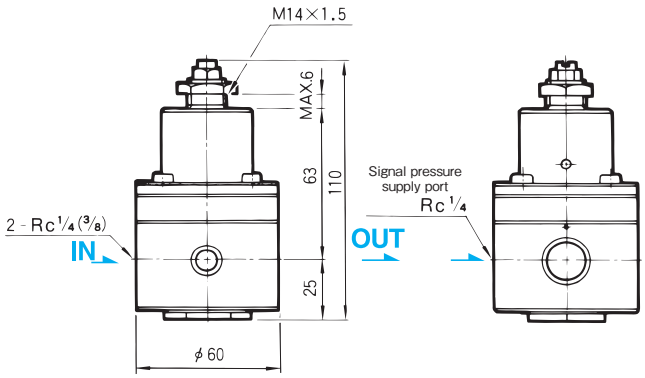

Standard type (2 circuit)

LVD5-02-8A・10A

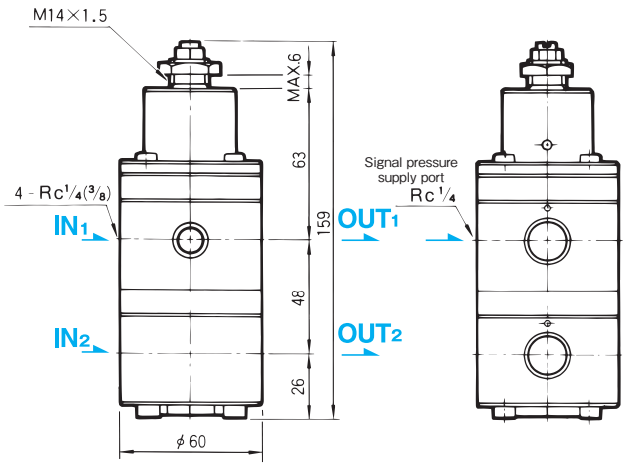

Performance Tables

Flow characteristics graphs (supply pressure=0.5MPa)

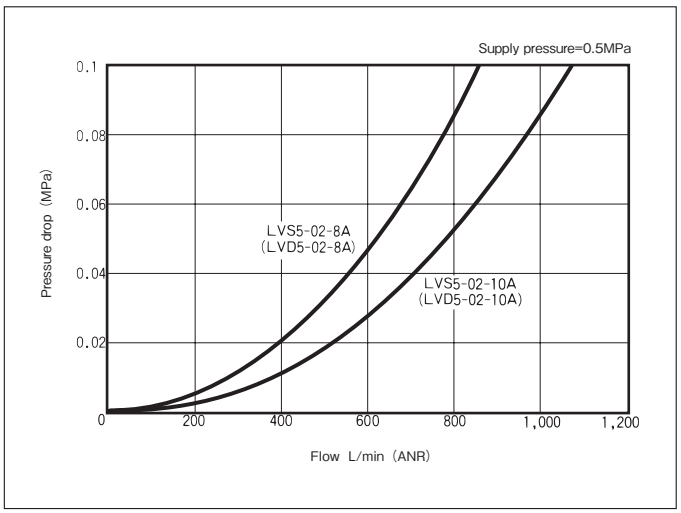

Operating Instructions

1 Fluid

- Use only with clean fluids as dirt, waste, etc. in the fluid may cause malfunctioning.

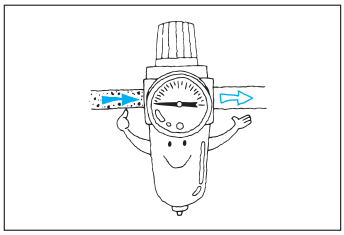

2 During operation

- Lockup valves are of the bleed type. Although a small amount of air will escape from the relief opening during operation, it will not cause any problems under normal use. To prevent air escaping, apply a signal pressure more than 0.15MPa higher than the set pressure on the valve.

3 Pressure setting procedure

Step1. Apply a signal pressure equal to the set pressure.(Valve opens.)

Step2. Turn the adjusting screw clockwise to close the valve. This completes pressure setting. (After pressure setting is completed, a small amount of air will escape from the relief opening. However, this will not cause any problems under normal use.)

Step3. Increase the signal pressure. (Applying a signal pressure more than 0.05MPa higher than the set pressure will make operation more stable. To prevent air escaping, apply a signal pressure more than 0.15MPa higher than the set pressure.)

SLOW-START VALVES
(Quick cylinder extension preventive valves)

SSV2	Standard type	RC 3/8 · 1/2

This valve prevents accidents that may arise from a cylinder suddenly rising in response to the operation of a solenoid valve, etc. It has a built-in bleed mechanism to supply air to the cylinder gradually at the initial stage of operation of the cylinder, and by automatically opening the main valve at high speed when the pressure in the cylinder rises enough.

JIS Symbol

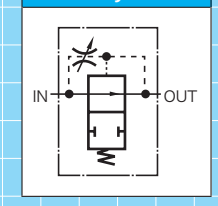

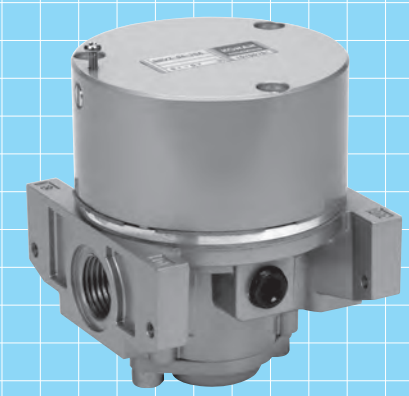

Model Code

When ordering,specify the model as follows:

Standard type

Rc 3/8 · 1/2

SSV2 – 04 – ❶

● Port size

❶ Port size	
Rc3/8	10A
Rc1/2	15A

Specifications

Model code	SSV2-04	
Port size	10A	15A
	Rc3/8	Rc1/2
Operating pressure	0.1 ~ 0.7MPa	
Proof pressure	1.05MPa	
Operating temperature	-20 ~ 60℃ (For use below 5℃ ,provide adequate measures against freezing.)	
Mass	1.4kg	

● For specifications other than those listed above,please contact us.
● In the event of use in high bry air over dew point − 40℃ ,please contact us.

Operation

Standard type

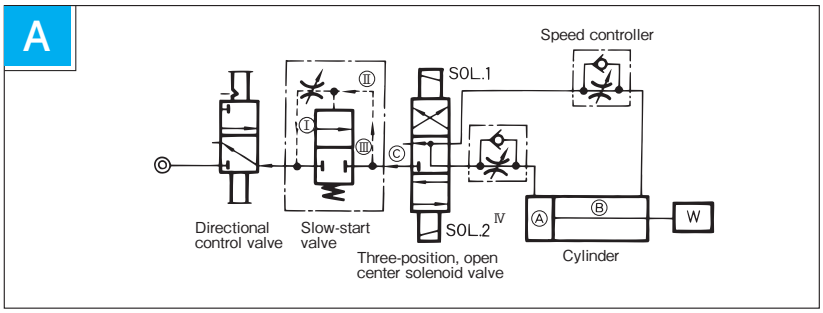

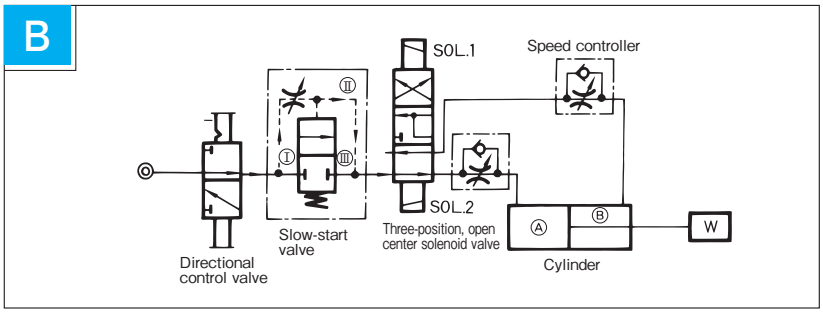

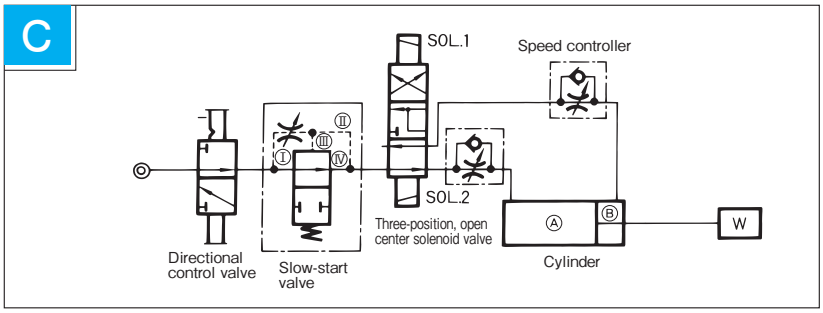

● When the cylinder has an internal pressure of 0 MPa

See circuit Ⓐ .When the three-position, open-center solenoid valve is placed in neutral and the directional control valve in OFF, the air pressures in chambers Ⓐ and Ⓑ of the cylinder are discharged through the solenoid valve, and the air pressure in area Ⓒ flows Ⅲ to Ⅱ to Ⅰ and is discharged. During discharge, the main valve of the slow-start valve is kept closed by spring force.

● At startup of the cylinder

Turn on the directional control valve when the cylinder piston is to be moved to the right by energizing the number 2 solenoid of the solenoid valve. The air pressure flows through passages Ⅰ and Ⅱ and the passage drilled in the piston of the slow start valve, and passage Ⅲ , in that order, and is gradually furnished to the cylinder chamber Ⓐ. A needle valve is installed between chambers Ⅰ and Ⅱ. This is used to adjust the amount of air to cylinder chamber Ⓐ for meter-in control of the cylinder. This feature prevents sudden operation of the cylinder. At startup of the cylinder, the pressure on the piston top is still small, and hence the main valve of the slow-start valve remains closed, as in circuit Ⓐ.

● During normal operation of the cylinder

Air entering cylinder chamber Ⓐ through passages Ⅰ, Ⅱ and Ⅲ gradually increases. When the pressure reaches a given value, it starts to act on the piston top Ⅳ , pushing the piston down, and fully opens the main valve of the slow-start valve. When the main valve is opened, the normal airpressure circuit is completed. With a speed controller installed as the meter-out device the cylinder speed can now be controlled.

Outside Dimensions

Standard type

SSV2-04-10A・15A

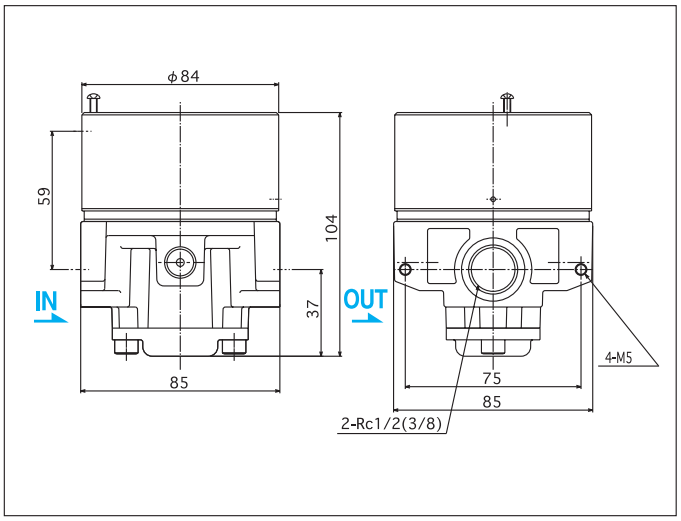

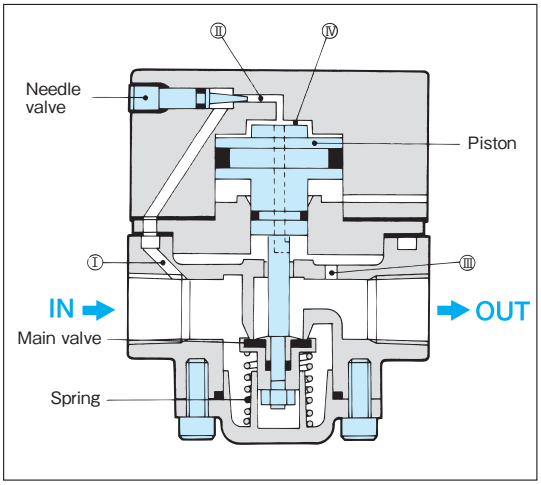

Performance Tables

Switching sensitivity graph

SSV2-04-10A・15A

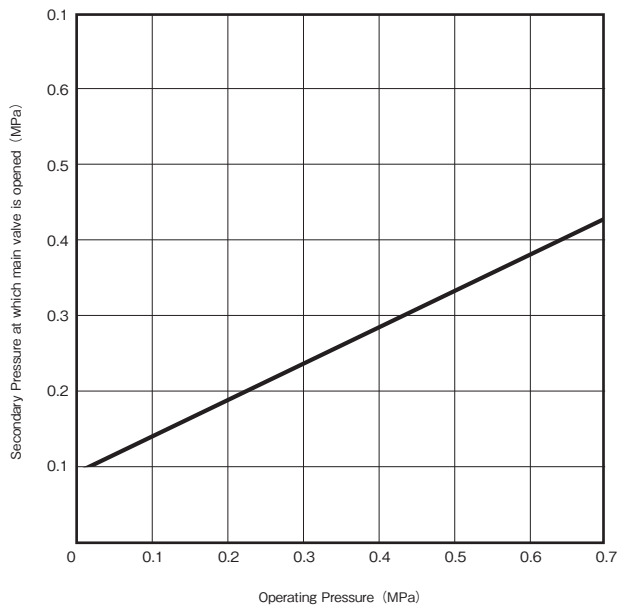

Operating Instructions

1 Fluid

● Use only with clean fluids as dirt, waste, etc. may cause malfunctioning.

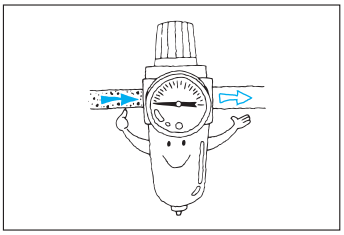

2 Starting speed of the cylinder

● Use the needle valve to adjust the starting speed of the cylinder.

PRESSURE DETECTION VALVES

3 Ports

PSV5	Standard type	RC 3/8 · 1/2

This valve detects signal pressure (air pressure) and controls other valves to which it is attached ; when mounted on a shutoff valve, for example, it operates the shutoff valve if it detects a signal pressure drop.

JIS Symbol

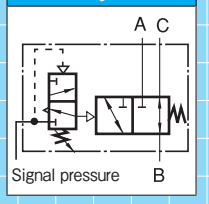

5 Ports

PSV2	Standard type	RC 1/4 · 3/8
PSV3L	Low pressure purpose	RC 1/4 · 3/8

5-port type pressure detection valve detects signal pressure (air pressure) and directly control other actuators.

JIS Symbol

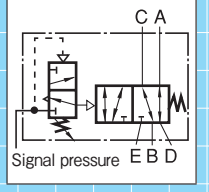

Model Code

When ordering,specify the model as follows:

3 Ports

Standard type

Rc 3/8 · 1/2

PSV5 ① –04 – ② – ④

① Corrosion-resistant ② Port size ④ Bracket

5 Ports

Standard type

Rc 1/4 · 3/8

PSV2 ① –02 – ③ – ④

① Corrosion-resistant ③ Port size ④ Bracket

Low pressure purpose

Rc 1/4 · 3/8

PSV3L ① –02 – ③ – ④

① Corrosion-resistant ③ Port size ④ Bracket

① Corrosion-resistant

- Portions that are exposed to outside weather conditions are corrosion-resistant coating and the exposed bolts,nuts and brackets are stainless steel.

Standard	No entry
Corrosion-resistant type	S

② Port size

Rc3/8	10A
Rc1/2	15A

③ Port size

Rc1/4	8A
Rc3/8	10A

- Port size of "D"and "E" are Rc1/4

④ Bracket

Without	No entry
With (Append)	BR

- Bracket is not mounted but appended with valves.

Specifications

Number of ports		3 Ports		5 Ports		5 Ports (Low pressure purpose)	
Model code		PSV5-04		PSV2-02		PSV3L-02	
Port size		10A	15A	8A	10A	8A	10A
		Rc3/8	Rc1/2	Rc1/4	Rc3/8	Rc1/4	Rc3/8
Effective sectional area		32㎟	48㎟	22㎟		22㎟	
Operating pressure	Signal pressure	Max. 1.0MPa				Max. 0.5MPa	
	Supply pressure	Max. 0.7MPa				Max. 0.7MPa	
Pressure setting		0.06 ～ 0.7MPa				0.03 ～ 0.2MPa	
Proof pressure		1.5MPa				1.05MPa	
Operating temperature		-5 ～ 60℃					
Mass		約 1.5kg					

- For specifications other than those listed above,please contact us.
- In the event of use in high bry air over dew point － 40℃ ,please contact us.

Outside Dimensions

Standard type

PSV5-04-10A・15A

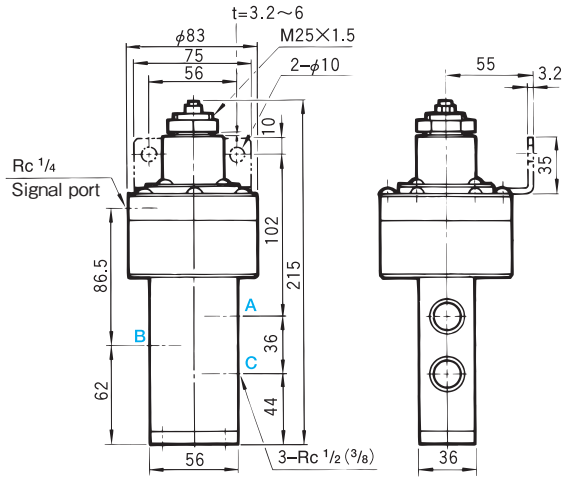

PSV2-02-8A・10A

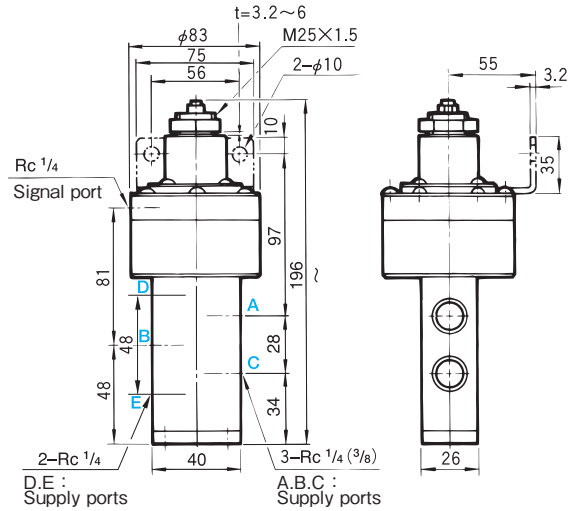

PSV3L-02-8A・10A

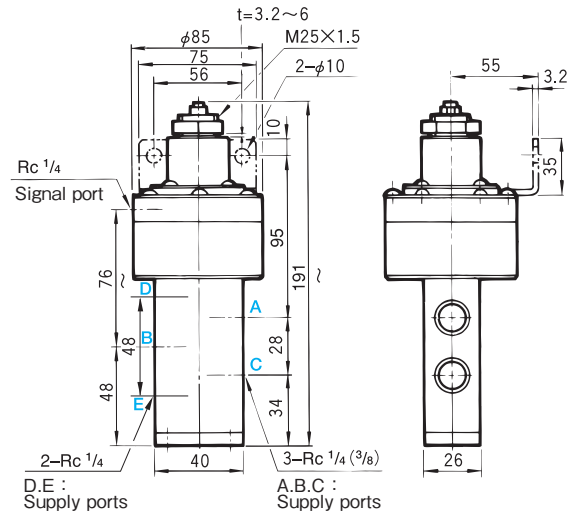

Operation

Differential

PSV5-04-10A・15A

Pressure setting (MPa)	Differential (MPa)
0.06	0.005 or less
0.5	0.03 or less
0.7	0.03 or less

PSV2-02-8A・10A

Pressure setting (MPa)	Differential (MPa)
0.06	0.003
0.5	0.018
0.7	0.02

PSV3L-02-8A・10A

Pressure setting (MPa)	Differential (MPa)
0.03	0.002
0.06	0.004
0.2	0.005

Operating Instructions

1 Fluid

- Use clean fluid, as dusts and drains included in the fluid may greatly affect the product performance, causing malfunction.

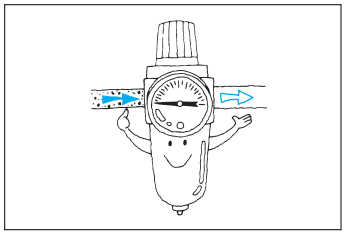

2 Caution

- Pressure detection valve is a bleed type valve. During operation air escapes from the bleeding hole, but this does not affect the valve performance.

3 Pressure setting

Step1. Supply a signal pressure equal to the set pressure (Valve opens) .

Step2. Turn the adjusting screw clockwise to close the valve and complete pressure setting. (After pressure setting is completed, a small amount of air will escape from the bleeding hoie. However, this does not affect the valve performance.)

Step3. Increase the signal pressure. (Set the signal pressure at least 0.05 MPa higher than the set pressure for stable valve operation.)

One-Touch Couplers
TOUCH CONNECTORS

サイズ	M5 × 0.8・R or Rc 1/8・1/4・3/8・1/2

Touch connectors are one-touch couplers designed with operational ease as the priority, and adaptable for resin-made tubes for connecting pneumatic and vacuum circuits

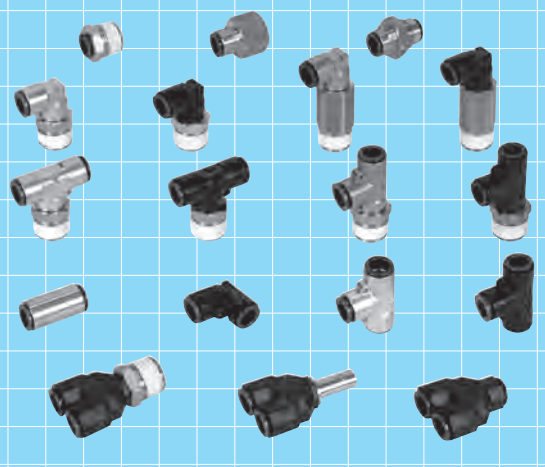

Features

A wide range of tubing materials

- A wide choice of tubing materials is available including polyurethane, polyamide, polyethylene and polytetrafluoroethylene, depending on the application

Optional color indicator rings and plates

- The indicator rings and plates permit visual distinction between lines in a complicated piping system for easy assembly and maintenance.

One-touch connection

- One-touch connection and disconnection eliminates the need for tools.

Large flow, yet compact design

Ideal for vacuum equipment piping

Connector mountable in any direction

Model Code

When ordering,specify the model as follows. Please order it by ten units.

① ② – ③ ④

- ① Applicable tube diameter
- ② Material for the body
- ③ Thread size (Port size)
- ④ Type of coupler

① Applicable tube diameter

4mm	4
6mm	6
8mm	8
10mm	10
12mm	12

② Material for the body

Metal	No entry
Resin	R

③ Thread size (Port size)

M5 × 0.8	M5
R or Rc 1/8	01
R or Rc 1/4	02
R or Rc 3/8	03
R or Rc 1/2	04
Union	00

- Kind of threads for both male and female thread please refer each dimension table.

④ Type of coupler

Male connector	M
Female connector	F
Male elbow	ML
Long male elbow	M2L
Male branch tee	MT
Male run tee	RT
Union	U
Union elbow	UL
Union tee	UT
Bulk head union	BU
Y connector	Y
Branch Y	BY
Union Y	UY

Specifications

Model code		Same format for all
Applicable fluid		Compressed air, vacuum, etc
Operating pressure		Max.0.99MPa
Material for main part	Body	Metal, Polyacetal
	Seal	NBR
Applicable tube material		Polyurethane, polyamide（nylon）, polyethylene, polytetrafluoroethylene（PTFE）

Construction

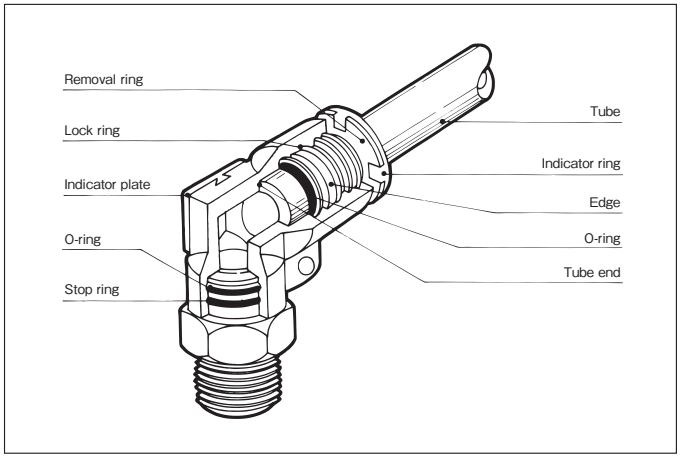

- The edge always cuts into the exterior surface of the tube due to its spring force. When force is applied for removing the tube, the edge will cut more deeply into the tube with the lock ring. To remove the tube, pull it out while pressing the ring.

Outside Dimensions

Male connector M

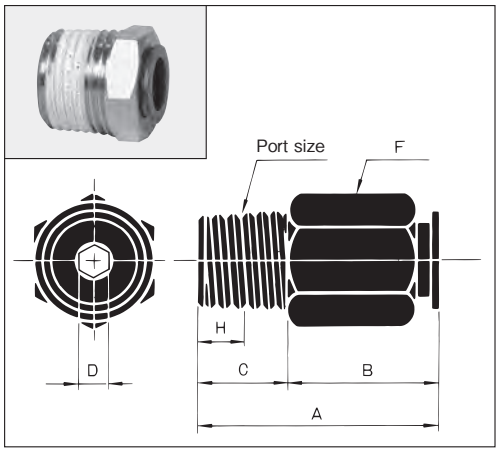

Model code	Port size	Dimensions（mm）						Material for the body
		A	B	C	D	F	H	
4-M5M	M5 × 0.8	20.5	16.5	4	–	10	–	Metal
4-01M	R1/8	17.6	9.6	8	3	10	4	
4-02M	R1/4	19.1	8.1	11	3	14	6	
6-M5M	M5 × 0.8	21.8	17.8	4	–	12	–	
6-01M	R1/8	21.7	13.7	8	4	12	4	
6-02M	R1/4	20.2	9.2	11	4	14	6	
6-03M	R3/8	21.2	9.2	12	4	17	6.4	
8-01M	R1/8	27.6	19.6	8	5	14	4	
8-02M	R1/4	26.1	15.1	11	6	14	6	
8-03M	R3/8	21.6	9.6	12	6	17	6.4	
10-01M	R1/8	28.3	20.3	8	5	17	4	
10-02M	R1/4	29.6	18.6	11	6	17	6	
10-03M	R3/8	27.6	15.6	12	8	17	6.4	
10-04M	R1/2	24.6	9.6	15	8	21	8	
12-02M	R1/4	32.6	21.6	11	7	19	6	
12-03M	R3/8	28.6	16.6	12	9	19	6.4	
12-04M	R1/2	26.6	11.6	15	9	21	8	

- Dimension “F” shows the subtense of a hexagon.

Female connector F

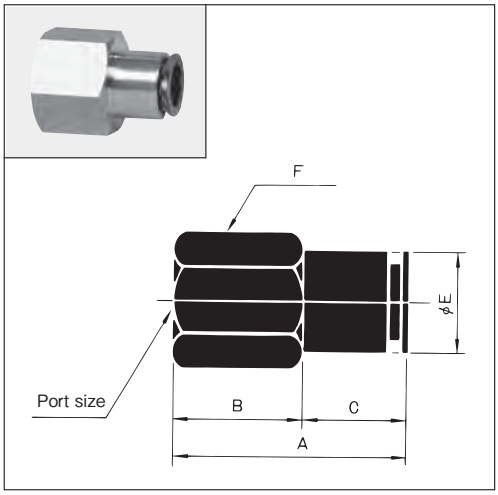

Model code	Port size	Dimensions (mm)					Material for the body
		A	B	C	E	F	
4-01F	Rc1/8	25	13	12	11	12	Metal
4-02F	Rc1/4	28	15	13	11	17	
6-01F	Rc1/8	26.3	14	12.3	13	14	
6-02F	Rc1/4	29.3	16	13.3	13	17	
6-03F	Rc3/8	30.3	16	14.3	13	21	
8-01F	Rc1/8	27.4	14	13.4	15	17	
8-02F	Rc1/4	30.4	16	14.4	15	17	
8-03F	Rc3/8	31.4	17	14.4	15	21	
10-02F	Rc1/4	30.8	16	14.8	17	17	
10-03F	Rc3/8	31.8	17	14.8	17	21	
10-04F	Rc1/2	34.8	19	15.8	17	24	
12-02F	Rc1/4	32.4	17	15.4	19	19	
12-03F	Rc3/8	33.4	18	15.4	19	21	
12-04F	Rc1/2	36.4	19.5	16.9	19	24	

● Dimension "F" shows the subtense of a hexagon.

Male elbow ML

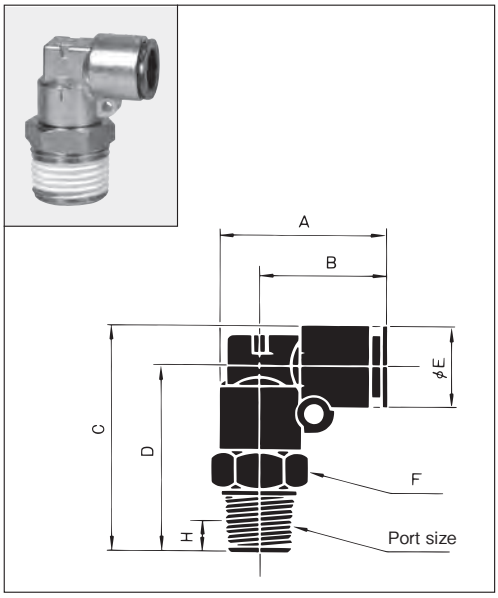

Model code	Port size	Dimensions (mm)							Material for the body
		A	B	C	D	E	F	H	
4-M5ML	M5 × 0.8	23.7	18.2	26.5	21	11	12	–	Metal
4-01ML	R1/8	23.7	18.2	30.5	25	11	12	4	
4-02ML	R1/4	23.7	18.2	33.5	28	11	14	6	
6-M5ML	M5 × 0.8	26.5	20	28.5	22	13	14	–	
6-01ML	R1/8	26.5	20	32.5	26	13	14	4	
6-02ML	R1/4	26.5	20	35.5	29	13	14	6	
6-03ML	R3/8	26.5	20	36.5	30	13	17	6.4	
8-01ML	R1/8	29.6	22.1	34.5	27	15	17	4	
8-02ML	R1/4	29.6	22.1	37.5	30	15	17	6	
8-03ML	R3/8	29.6	22.1	38.5	31	15	17	6.4	
10-01ML	R1/8	32	23.5	36.5	28	17	17	4	
10-02ML	R1/4	32	23.5	39.5	31	17	17	6	
10-03ML	R3/8	32	23.5	40.5	32	17	17	6.4	
10-04ML	R1/2	32	23.5	44.5	36	17	21	8	
12-02ML	R1/4	35.6	26.1	44	34.5	19	19	6	
12-03ML	R3/8	35.6	26.1	45	35.5	19	19	6.4	
12-04ML	R1/2	35.6	26.1	48	38.5	19	21	8	

● Dimension "F" shows the subtense of a hexagon. ● The threaded portion of the male elbow can be turned as desired.

Male elbow ML

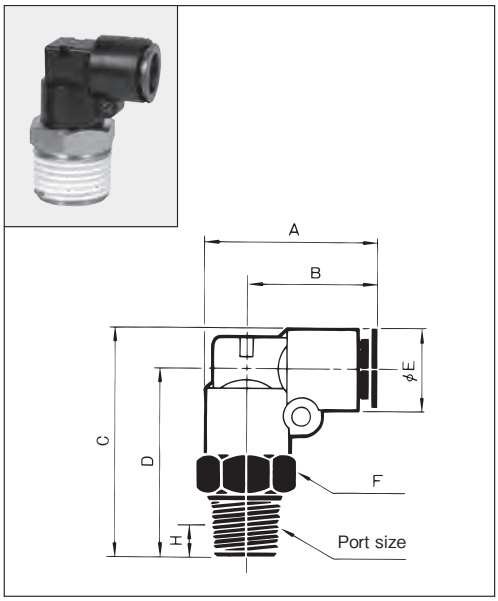

Model code	Port size	Dimensions (mm)							Material for the body
		A	B	C	D	E	F	H	
4R-M5ML	M5 × 0.8	23.7	18.2	26.5	21	11	12	–	Polyacetal・Metal
4R-01ML	R1/8	23.7	18.2	30.5	25	11	12	4	
4R-02ML	R1/4	23.7	18.2	33.5	28	11	14	6	
6R-M5ML	M5 × 0.8	26.5	20	28.5	22	13	14	–	
6R-01ML	R1/8	26.5	20	32.5	26	13	14	4	
6R-02ML	R1/4	26.5	20	35.5	29	13	14	6	
6R-03ML	R3/8	26.5	20	36.5	30	13	17	6.4	
8R-01ML	R1/8	30.1	22.6	34.5	27	15	17	4	
8R-02ML	R1/4	30.1	22.6	37.5	30	15	17	6	
8R-03ML	R3/8	30.1	22.6	38.5	31	15	17	6.4	
10R-01ML	R1/8	32.5	24	36.5	28	17	17	4	
10R-02ML	R1/4	32.5	24	39.5	31	17	17	6	
10R-03ML	R3/8	32.5	24	40.5	32	17	17	6.4	
10R-04ML	R1/2	32.5	24	44.5	36	17	21	8	
12R-02ML	R1/4	36.1	26.1	44.5	34.5	20	19	6	
12R-03ML	R3/8	36.1	26.1	45.5	35.5	20	19	6.4	
12R-04ML	R1/2	36.1	26.1	48.5	38.5	20	21	8	

● Dimension "F" shows the subtense of a hexagon. ● The threaded portion of the male elbow can be turned as desired.

Long male elbow M2L

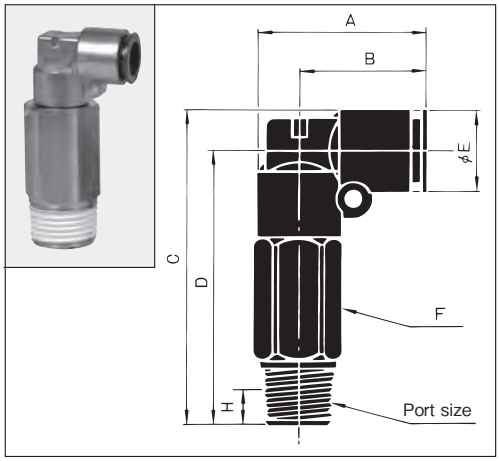

Model code	Port size	Dimensions (mm)							Material for the body
		A	B	C	D	E	F	H	
4-01M2L	R1/8	23.7	18.2	47.5	42	11	12	4	Metal
4-02M2L	R1/4	23.7	18.2	50.5	45	11	14	6	
6-01M2L	R1/8	26.5	20	51.5	45	13	12	4	
6-02M2L	R1/4	26.5	20	54.5	48	13	14	6	
8-01M2L	R1/8	29.6	22.1	55.5	48	15	14	4	
8-02M2L	R1/4	29.6	22.1	58.5	51	15	14	6	
8-03M2L	R3/8	29.6	22.1	59.5	52	15	17	6.4	
10-02M2L	R1/4	32	23.5	62.5	54	17	17	6	
10-03M2L	R3/8	32	23.5	63.5	55	17	17	6.4	
10-04M2L	R1/2	32	23.5	67.5	59	17	21	8	
12-02M2L	R1/4	35.6	26.1	68	58.5	19	19	6	
12-03M2L	R3/8	35.6	26.1	69	59.5	19	19	6.4	
12-04M2L	R1/2	35.6	26.1	74	64.5	19	21	8	

● Dimension "F" shows the subtense of a hexagon. ● The threaded portion of the male elbow can be turned as desired.

Long male elbow M2L

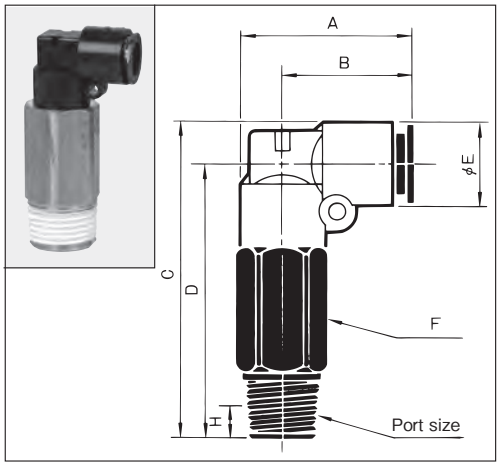

Model code	Port size	Dimensions (mm)							Material for the body
		A	B	C	D	E	F	H	
4R-01M2L	R1/8	23.7	18.2	47.5	42	11	12	4	Polyacetal・Metal
4R-02M2L	R1/4	23.7	18.2	50.5	45	11	14	6	
6R-01M2L	R1/8	26.5	20	51.5	45	13	12	4	
6R-02M2L	R1/4	26.5	20	54.5	48	13	14	6	
8R-01M2L	R1/8	30.1	22.6	55.5	48	15	14	4	
8R-02M2L	R1/4	30.1	22.6	58.5	51	15	14	6	
8R-03M2L	R3/8	30.1	22.6	59.5	52	15	17	6.4	
10R-02M2L	R1/4	32.5	24	62.5	54	17	17	6	
10R-03M2L	R3/8	32.5	24	63.5	55	17	17	6.4	
10R-04M2L	R1/2	32.5	24	67.5	59	17	21	8	
12R-02M2L	R1/4	36.1	26.1	68.5	58.5	20	19	6	
12R-03M2L	R3/8	36.1	26.1	60	59.5	20	19	6.4	
12R-04M2L	R1/2	36.1	26.1	65	64.5	20	21	8	

● Dimension "F" shows the subtense of a hexagon. ● The threaded portion of the male elbow can be turned as desired.

Male branch tee MT

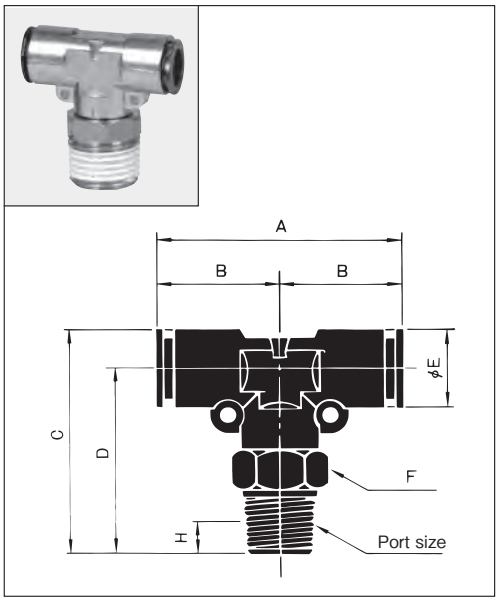

Model code	Port size	Dimensions (mm)							Material for the body
		A	B	C	D	E	F	H	
4-M5MT	M5 × 0.8	36.4	18.2	26.5	21	11	12	—	Metal
4-01MT	R1/8	36.4	18.2	30.5	25	11	12	4	
4-02MT	R1/4	36.4	18.2	33.5	28	11	14	6	
6-M5MT	M5 × 0.8	40	20	28.5	22	13	14	—	
6-01MT	R1/8	40	20	32.5	26	13	14	4	
6-02MT	R1/4	40	20	35.5	29	13	14	6	
6-03MT	R3/8	40	20	36.5	30	13	17	6.4	
8-01MT	R1/8	44.2	22.1	34.5	27	15	17	4	
8-02MT	R1/4	44.2	22.1	37.5	30	15	17	6	
8-03MT	R3/8	44.2	22.1	38.5	31	15	17	6.4	
10-01MT	R1/8	47	23.5	36.5	28	17	17	4	
10-02MT	R1/4	47	23.5	39.5	31	17	17	6	
10-03MT	R3/8	47	23.5	40.5	32	17	17	6.4	
10-04MT	R1/2	47	23.5	44.5	36	17	21	8	
12-02MT	R1/4	52.2	26.1	44	34.5	19	19	6	
12-03MT	R3/8	52.2	26.1	45	35.5	19	19	6.4	
12-04MT	R1/2	52.2	26.1	48	38.5	19	21	8	

● Dimension "F" shows the subtense of a hexagon. ● The threaded portion of the male elbow can be turned as desired.

Male branch tee MT

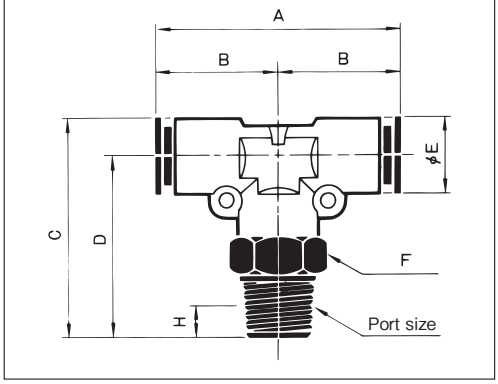

Model code	Port size	Dimensions (mm)							Material for the body
		A	B	C	D	E	F	H	
4R-M5MT	M5 × 0.8	36.4	18.2	26.5	21	11	12	—	Polyacetal・Metal
4R-01MT	R1/8	36.4	18.2	30.5	25	11	12	4	
4R-02MT	R1/4	36.4	18.2	33.5	28	11	14	6	
6R-M5MT	M5 × 0.8	40	20	28.5	22	13	14	—	
6R-01MT	R1/8	40	20	32.5	26	13	14	4	
6R-02MT	R1/4	40	20	35.5	29	13	14	6	
6R-03MT	R3/8	40	20	36.5	30	13	17	6.4	
8R-01MT	R1/8	45.2	22.6	34.5	27	15	17	4	
8R-02MT	R1/4	45.2	22.6	37.5	30	15	17	6	
8R-03MT	R3/8	45.2	22.6	38.5	31	15	17	6.4	
10R-01MT	R1/8	48	24	36.5	28	17	17	4	
10R-02MT	R1/4	48	24	39.5	31	17	17	6	
10R-03MT	R3/8	48	24	40.5	32	17	17	6.4	
10R-04MT	R1/2	48	24	44.5	36	17	21	8	
12R-02MT	R1/4	52.2	26.1	44.5	34.5	20	19	6	
12R-03MT	R3/8	52.2	26.1	45.5	35.5	20	19	6.4	
12R-04MT	R1/2	52.2	26.1	48.5	38.5	20	21	8	

● Dimension "F" shows the subtense of a hexagon. ● The threaded portion of the male elbow can be turned as desired.

Male branch tee RT

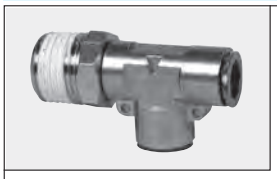

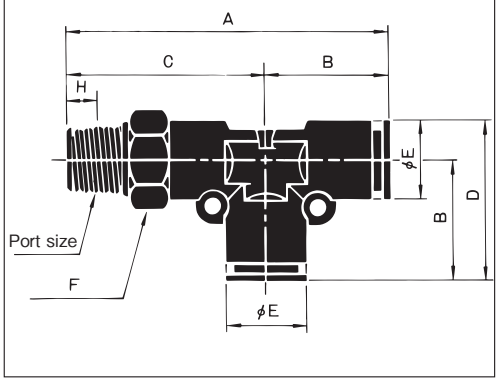

Model code	Port size	Dimensions (mm)							Material for the body
		A	B	C	D	E	F	H	
4-M5RT	M5 × 0.8	39.4	18.2	21.2	23.7	11	12	—	Metal
4-01RT	R1/8	43.4	18.2	25.2	23.7	11	12	4	
4-02RT	R1/4	46.4	18.2	28.2	23.7	11	14	6	
6-M5RT	M5 × 0.8	42	20	22	26.5	13	14	—	
6-01RT	R1/8	46	20	26	26.5	13	14	4	
6-02RT	R1/4	49	20	29	26.5	13	14	6	
6-03RT	R3/8	50	20	30	26.5	13	17	6.4	
8-01RT	R1/8	49.1	22.1	27	29.6	15	17	4	
8-02RT	R1/4	52.1	22.1	30	29.6	15	17	6	
8-03RT	R3/8	53.1	22.1	31	29.6	15	17	6.4	
10-01RT	R1/8	51.5	23.5	28	32	17	17	4	
10-02RT	R1/4	54.5	23.5	31	32	17	17	6	
10-03RT	R3/8	55.5	23.5	32	32	17	17	6.4	
10-04RT	R1/2	59.5	23.5	36	32	17	21	8	
12-02RT	R1/4	60.6	26.1	34.5	35.6	19	19	6	
12-03RT	R3/8	61.6	26.1	35.5	35.6	19	19	6.4	
12-04RT	R1/2	64.6	26.1	38.5	35.6	19	21	8	

● Dimension "F" shows the subtense of a hexagon. ● The threaded portion of the male elbow can be turned as desired.

Male branch tee RT

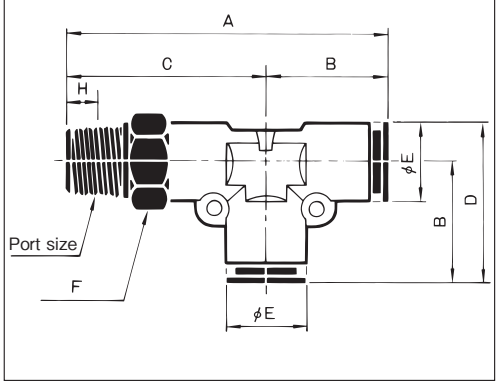

Model code	Port size	Dimensions (mm)							Material for the body
		A	B	C	D	E	F	H	
4R-M5RT	M5 × 0.8	39.4	18.2	21.2	23.7	11	12	—	Polyacetal・Metal
4R-01RT	R1/8	43.4	18.2	25.2	23.7	11	12	4	
4R-02RT	R1/4	46.4	18.2	28.2	23.7	11	14	6	
6R-M5RT	M5 × 0.8	42	20	22	26.5	13	14	—	
6R-01RT	R1/8	46	20	26	26.5	13	14	4	
6R-02RT	R1/4	49	20	29	26.5	13	14	6	
6R-03RT	R3/8	50	20	30	26.5	13	17	6.4	
8R-01RT	R1/8	49.6	22.6	27	30.1	15	17	4	
8R-02RT	R1/4	52.6	22.6	30	30.1	15	17	6	
8R-03RT	R3/8	53.6	22.6	31	30.1	15	17	6.4	
10R-01RT	R1/8	52	24	28	32.5	17	17	4	
10R-02RT	R1/4	55	24	31	32.5	17	17	6	
10R-03RT	R3/8	56	24	32	32.5	17	17	6.4	
10R-04RT	R1/2	60	24	36	32.5	17	21	8	
12R-02RT	R1/4	60.6	26.1	34.5	36.1	20	19	6	
12R-03RT	R3/8	61.6	26.1	35.5	36.1	20	19	6.4	
12R-04RT	R1/2	64.6	26.1	38.5	36.1	20	21	8	

● Dimension "F" shows the subtense of a hexagon. ● The threaded portion of the male elbow can be turned as desired.

Union U

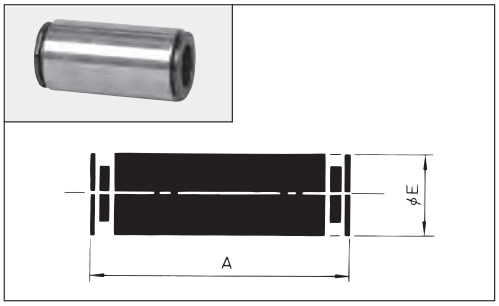

Model code	Dimensions (mm)		Material for the body
	A	E	
4-00U	32	11	Metal
6-00U	34.6	13	
8-00U	36.8	15	
10-00U	37.6	17	
12-00U	40.8	19	

Union elbow UL

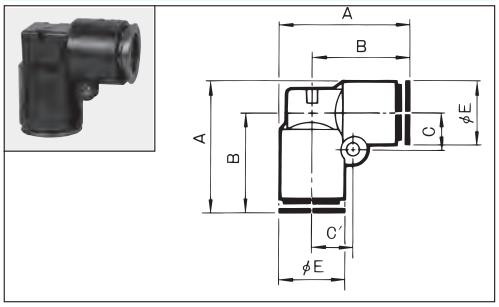

Model code	Dimensions (mm)					Material for the body
	A	B	C	C'	E	
4R-00UL	23.7	18.2	6.5	7.1	11	Polyacetal
6R-00UL	26.5	20	7.5	8.3	13	
8R-00UL	30.1	22.6	9	9.5	15	
10R-00UL	32.5	24	10	10.5	17	
12R-00UL	36.1	26.1	11.5	12	20	

Union tee UT

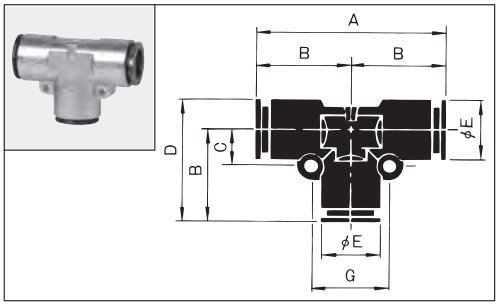

Model code	Dimensions (mm)						Material for the body
	A	B	C	D	E	G	
4-00UT	36.4	18.2	6.5	23.7	11	14.2	Metal
6-00UT	40	20	7.5	26.5	13	16.6	
8-00UT	44.2	22.1	9	29.6	15	19	
10-00UT	47	23.5	10	32	17	21	
12-00UT	52.2	26.1	11	35.6	19	23	

Union tee UT

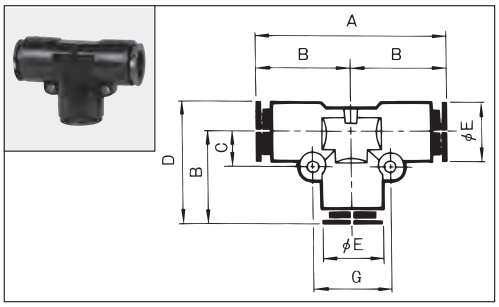

Model code	Dimensions (mm)						Material for the body
	A	B	C	D	E	G	
4R-00UT	36.4	18.2	6.5	23.7	11	14.2	Polyacetal
6R-00UT	40	20	7.5	26.5	13	16.6	
8R-00UT	45.2	22.6	9	30.1	15	19	
10R-00UT	48	24	10	32.5	17	21	
12R-00UT	52.2	26.1	11.5	36.1	20	24	

Bulk head union BU

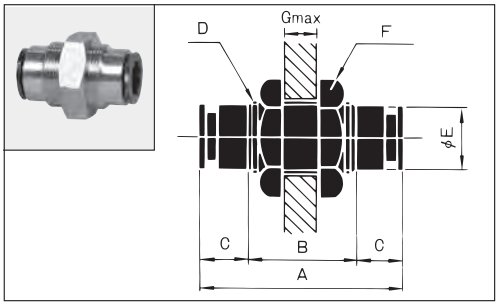

Model code	Dimensions (mm)							Material for the body
	A	B	C	D	E	F	Gmax.	
4-00BU	32	18	7	M12 × 1	11	14	10	Metal
6-00BU	34.6	18	8.3	M14 × 1	13	17	10	
8-00BU	36.8	18	9.4	M16 × 1	15	19	10	
10-00BU	37.6	18	9.8	M20 × 1	17	24	10	
12-00BU	40.8	20	10.4	M22 × 1	19	24	10	

● Dimension "F" shows the subtense of a hexagon.

Branch Y BY

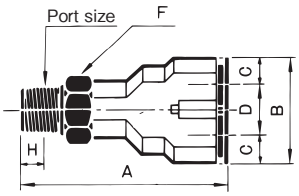

Model code	Port size	Dimensions (mm)						Material for the body
		A	B	C	D	F	H	
4R-M5BY	M5 × 0.8	37	22	5.5	11	12	—	Polyacetal・Metal
4R-01BY	R1/8	41	22	5.5	11	12	4	
4R-02BY	R1/4	44	22	5.5	11	14	6	
6R-M5BY	M5 × 0.8	–	–	–	–	–	–	
6R-01BY	R1/8	43.3	26	6.5	13	14	4	
6R-02BY	R1/4	46.3	26	6.5	13	14	6	
6R-03BY	R3/8	47.3	26	6.5	13	17	6.4	
8R-01BY	R1/8	47.4	30	7.5	15	17	4	
8R-02BY	R1/4	50.4	30	7.5	15	17	6	
8R-03BY	R3/8	51.4	30	7.5	15	17	6.4	
10R-01BY	R1/8	47.8	35	8.5	18	17	4	
10R-02BY	R1/4	50.8	35	8.5	18	17	6	
10R-03BY	R3/8	51.8	35	8.5	18	17	6.4	
10R-04BY	R1/2	55.8	35	8.5	18	21	8	
12R-02BY	R1/4	55.9	40	10	20	19	6	
12R-03BY	R3/8	56.9	40	10	20	19	6.4	
12R-04BY	R1/2	59.9	40	10	20	21	8	

● Dimension "F" shows the subtense of a hexagon. ● The threaded portion of the male elbow can be turned as desired.

Y connector Y

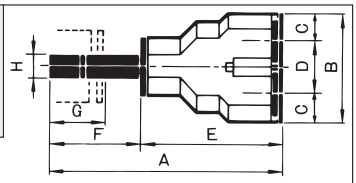

Model code	Applicablle tube diameter	Dimensions (mm)								Material for the body
		A	B	C	D	E	F	G	H	
4R-00Y	φ4	49.5	22	5.5	11	29.5	20	15.5	φ 4	Polyacetal
6R-00Y	φ6	52.8	26	6.5	13	31.8	21	16.8	φ 6	
8R-00Y	φ8	58.4	30	7.5	15	36.4	22	17.9	φ 8	
10R-00Y	φ10	59.3	35	8.5	18	36.8	22.5	18.3	φ 10	
12R-00Y	φ12	63.9	40	10	20	39.9	24	19.9	φ 12	

Union Y UY

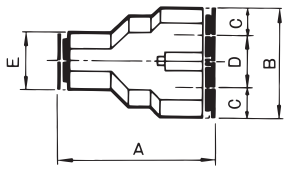

Model code	Applicablle tube diameter	Dimensions (mm)					Material for the body
		A	B	C	D	E	
4R-00UY	φ4	34	22	5.5	11	11	Polyacetal
6R-00UY	φ6	37.6	26	6.5	13	13	
8R-00UY	φ8	43.3	30	7.5	15	15	
10R-00UY	φ10	44.1	35	8.5	18	17	
12R-00UY	φ12	47.8	40	10	20	20	

Indicator ring

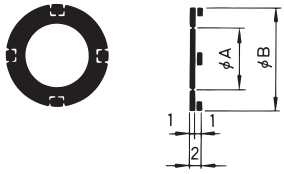

Model code	Applicablle tube diameter	Dimensions (mm)		Color code
		A	B	
4CR	φ4	4	10	W (white) R (red) LB (blue) Y (yellow) B (black) G (green)
6CR	φ6	6	12	
8CR	φ8	8	14	
10CR	φ10	10	17	
12CR	φ12	12	19	

Indicator plate

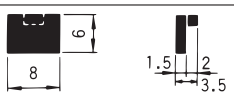

Model code	Color code
FCP	W (white) R (red) LB (blue) Y (yellow) B (black) G (green)

● The indicator plate is used in common for all sizes of elbows, tee and Y series.

Operating Instructions

1 During connection

● Completely insert the tube. Because the O-ring is used, the tube may feel to stop when it makes contact with the O-ring. However, it should be pushed past this, right up the tube end.

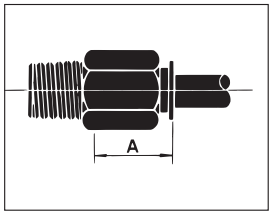

Unit : min

Dimensions A	Tube size
15.5	φ 4
16.8	φ 6
17.9	φ 8
18.3	φ 10
19.9	φ 12

TOUCH TUBES

Size	φ 4・6・8・10・12

These resin-made tubes are perfect for pneumatic piping.

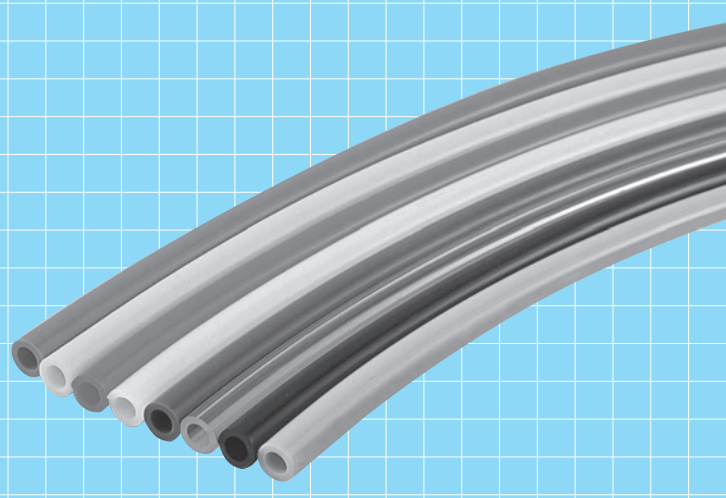

Features

Flexibility

- Touch tubes are more flexible than nylon tubes, and feature rubber-like elasticity, a minimal radius of curvature plus superior fatigue strength.

Oil resistance

- High oil resistance makes the touch tubes applicable with spindle oil, machine oil or other oils.

Abrasion resistance

- Superior mechanical strength and excellent abrasive resistance. It is most suitable for the facilities plumbing and the robot plumbing.

Lightweight design

- Tough and lightweight materials enable compact equipment design.

A wide range of colors available

- Touch tubes are available in an extended range of colors, including black, white, yellow, red, green, blue, light green and transparent.

Accurate outside diameter

- The highly accurate outside diameter makes touch tubes ideally suited as exterior seal connectors.

Model Code

When ordering,specify the model as follows:

TP – ❶ – ❷ – ❸

- ❶ Tube outside diameter
- ❷ Length of one roll
- ❸ Tube Color

❶ Tube outside diameter

4mm	4
6mm	6
8mm	8
10mm	10
12mm	12

❷ Length of one roll

20m (Standard)	20M
100m (Standard)	100M

❸ Tube Color

Black (Standard)	BK
White	W
Yellow	Y
Red	R
Green	G
Blue	LB
Transparent	C
Light green	LG

Specifications

Mode code	OD × ID (mm×mm)	Ambient temp. Fluid Working temp (℃)	Burst pressure (MPa)	Max. Working pressure (MPa)	Min.radius of curvature (mm)	Mass (kg/m)	OD accuracy (mm)	Color
TP-4	4 × 2	− 5 ~ 60	3.0	0.8	5	0.011	± 0.1	Standard : black, white, yellow, red, green, blue, transparent, light green
TP-6	6 × 4				12	0.019		
TP-8	8 × 5				15	0.037		
TP-10	10 × 6.5				25	0.055	+ 0.1 − 0.15	
TP-12	12 × 8				28	0.076		

Note.The value at a temperachure of 20℃ . Please refer to the graph of the next page for the coefficient by the temperature.

Reference

Graph of burst pressure correction coefficient by temperature

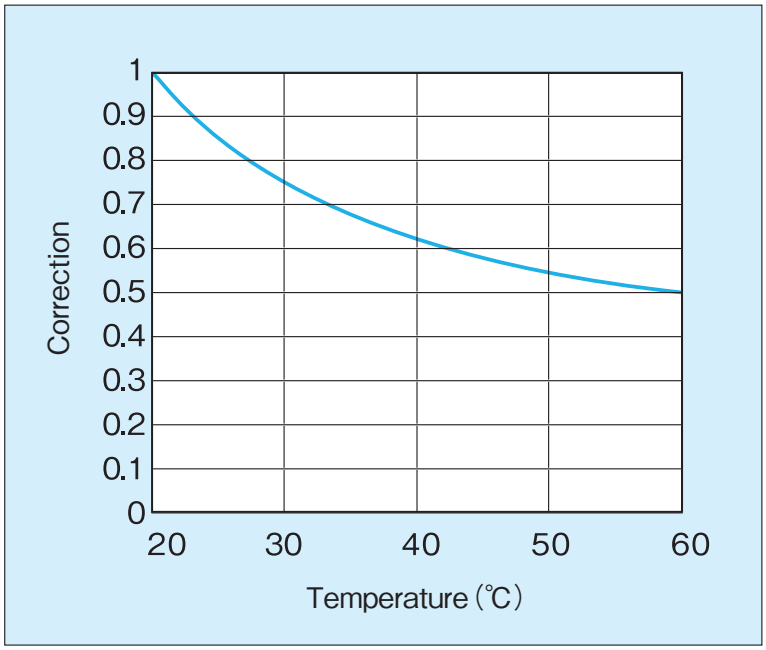

- Working Pressure
  =Burst Pressure × Correction factor × 1/4

MEMO

KONAN®

KONAN ELECTRIC CO.,LTD.

Tokyo Branch
Shiba-Sanesu-Wakamatsu Bldg.7-8, Shiba 4-chome, Minatoku, Tokyo 108-0014, Japan
Phone：+81-3-3454-1711　Fax：+81-3-3454-8699

Osaka Branch
Hankyu Terminal Bldg.1-4, Shibata 1-chome, Kitaku, Osaka 530-0012, Japan
Phone：+81-6-6373-6701　Fax：+81-6-6373-6740

Seibu Branch
Momiji Hiroshima Hikarimachi Bldg.12-20, Hikarimachi, 1-chome, Higashiku, Hiroshima, 732-0052, Japan
Phone：+81-82-568-0071　Fax：+81-82-568-0072

International Operation Division
4-97, Uedahigashimachi, Nishinomiya, Hyogo, 663-8133, Japan
Phone：+81-798-48-5931　Fax：+81-798-40-6659

URL=https://www.konan-em.com/

QUALITY SYSTEM CERTIFICATION
DNV·GL
ISO 9001
MGMT.SYS.
RvA C024

Tohoku Office	Phone:+81-22-215-1195
Chiba Office	Phone:+81-43-305-1401
Hokkaido Office	Phone:+81-11-792-7451
Nagoya Office	Phone:+81-52-581-6541
Kanazawa Office	Phone:+81-76-233-1411
Hiroshima Office	Phone:+81-82-568-0071
Takamatsu Office	Phone:+81-87-835-0411
Kitakyushu Office	Phone:+81-93-541-0281

Distributing Agent

2001.11
Please note that this catalog is subject to revision without notice.
2019.9-7版（D3）-J