2022

Standard Products

gearmotors • motors • controls













BODINE ELECTRIC COMPANY

bodine-electric.com

For 2D/3D CAD drawings and distributor locations, go to www.bodine-electric.com

Our website features the latest product specifications, technical documents, connection diagrams and instruction manuals. Dimension drawings and 3D models can be imported from the website directly into most CAD software programs. You will also find information about Bodine's newest products, our distributor locator, and helpful Tech Tools designed to answer the most commonly asked motion control questions.

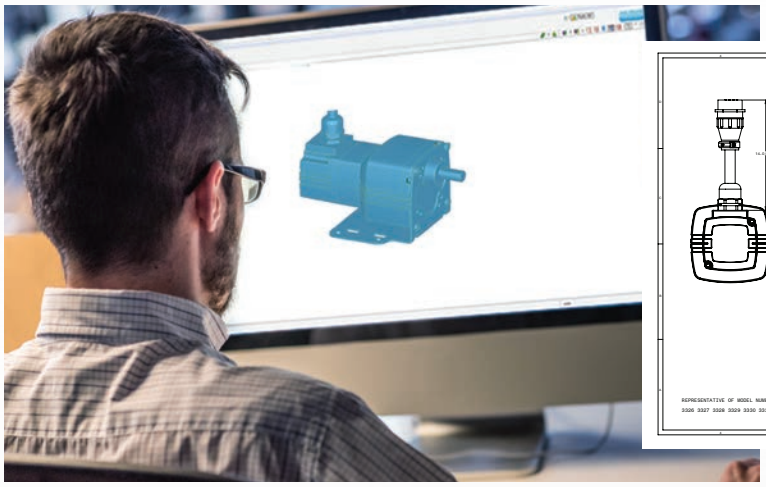

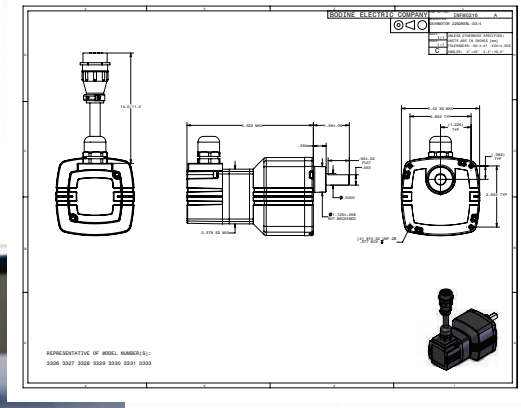

UL/CSA Safety Compliance

RoHS COMPLIANT

Products are marked cURus or UR/CSA, and most products meet CE. All products are also RoHS compliant. Motors and gearmotors conform to UL standard 1004 and CSA standard C22.2 No. 100. They are documented in UL file number E47177 and CSA file number LR2797. Electronic controls conform to UL standard 508 and CSA standard C22.2 No. 14. They are documented in UL file number E44529 and CSA file number LR26397.

Motor Options

For the comparative advantages of AC motors and gearmotors, see page 27.

Variable speed AC motors (Inverter-Duty)

- 230 VAC, 60 Hz (3-phase) or 230/460 VAC, 60 Hz (3-phase)

Fixed-speed AC motors

- 115 VAC, 60 Hz (single-phase) or 230 VAC, 60 Hz (3-phase)
- Metric voltage ratings are 230 VAC, 50 Hz (1- or 3-phase)

Permanent magnet DC motors

- Voltage ratings are 12/24 VDC, 24 VDC, 90/130 VDC or 130 VDC
- Metric voltage rating is 180 VDC
- Compatible with 90 V controls (90/130 VDC and 130 VDC only)

Brushless DC (ECM) motors

- Voltage ratings are 24 or 130 VDC

SCR rated permanent magnet DC gearmotors

- Voltage ratings are 90 and 180 VDC
- Rated maximum armature speed of 2500 rpm
- Compatible with unfiltered SCR controls

	Variable Speed Inverter-Duty AC				Fixed-Speed AC					Permanent Magnet DC			Brushless DC	
	30R	34R	42R	48R	K-2	30R	34R	42R	48R	24A	33A	42A	22B	34B
Power (HP)	1/25-1/17	1/8-1/4	3/8	1/3-3/4	1/1600- 1/200	1/40-1/30	1/15-1/5	1/12-1/4	1/5-1/2	1/50-1/7	1/16-1/3	1/4-1/2	1/16-1/5	1/5-3/8
Torque (oz-in.)	24-35	70-148	222	185-445	0.35-3.2	10-20	38-119	48-148	112-296	8-24	34-134	101-180	20-50	33-151
Rated Speed (rpm)	1700	1700, 1800	1700	1700, 1800	1200, 1550, 1800, 3600	1700, 1800, 3400	1700, 1800, 3400	1700, 3450	1700, 1800	2500, 11,500	2500	2500	2500, 10,000	2500, 10,000

© Copyright 2022. Catalog data subject to change without notice. All rights reserved. Printed in the U.S.A.

Table of Contents

		SPECIFICATIONS	DIMENSIONS
Inline and Parallel Shaft Gearmotors			
up to 226 lb-in.	Type **60P**	6	42
up to 40 lb-in.	Type **D**	7	42, 45
up to 120 lb-in.	Type **Z**	8	43
up to 210 lb-in.	Type **WX**	9	43
up to 350 lb-in.	Type **FX**	11	43
up to 1,000 lb-in.	Type **HG**	14	44
up to 1,000 lb-in.	Type **CG**	14	44
up to 120 oz-in.	Type **A/T (K-2)**	15	45
Right Angle Gearmotors			
up to 37 lb-in.	Type **3N/3F**	16	45
up to 77 lb-in.	Type **5R/5L**	17	46
up to 121 lb-in.	Type **5N/5L**	18	46
up to 121 lb-in.	Type **5F**	19	46
up to 148 lb-in.	Type **3RD**	20	47
up to 296 lb-in.	Type **5H**	20	47
up to 380 lb-in.	Type **GB**	21	47
up to 1,535 lb-in.	Type **25H2 / 30H3**	22	48
	Hollow Shaft		48
Motors Without Gearing			
from 3.5 to 68 oz-in.	AC Torque Motors	24	49
from 1/25 to 3/4 HP	AC Variable Speed Inverter-duty	25	49
up to 1/2 HP	AC Fixed Speed–Induction	26	49
up to 1/2 HP	Permanent Magnet DC	28	49
up to 1/2 HP	Brushless DC	29	49
Motor Speed Controls			
AC Inverters (for 230VAC Motors)		30	51
DC Motor Speed Controls (for 12/24 and 90/130V Motors)		31	51
Brushless DC Controls (for 12/24V and 130V Motors)		34	51
Accessories			40
Metric Inline and Parallel Shaft Gearmotors			
up to 26 Nm.	Type **60P**		4
up to 0.67 Nm	Type **A/T (K-2)**		35
up to 11.3 Nm	Type **D**		35
up to 11.3 Nm	Type **Z**		36
up to 19.8 Nm	Type **W**		36
up to 35.0 Nm	Type **E/F**		37
Metric Right Angle Gearmotors			
up to 16.7 Nm	Type **3F**		36
up to 10.5 Nm	Type **5N/5F**		38
up to 14.2 Nm	Type **5H**		38
up to 43.0 Nm	Type **GB**		38
Metric Motors without Gearing			
up to 140 Watts	AC Fixed Speed–Induction		39
up to 112 Watts	Permanent Magnet DC		39
Reference			
SCR Rated PMDC Gearmotors			4
Hollow Shaft Gearmotor Benefits			21
Safe Operating Torque and Speed Area			25
Common Abbreviations			26
Comparative Advantages of AC Motors and Gearmotors			27
Speed Regulation of Permanent Magnet DC Motors			28













Purchase a Bodine gearmotor and speed control together and get our extended 2-year system warranty.



Most products are marked as c UL us

RoHS COMPLIANT

WHAT'S NEW

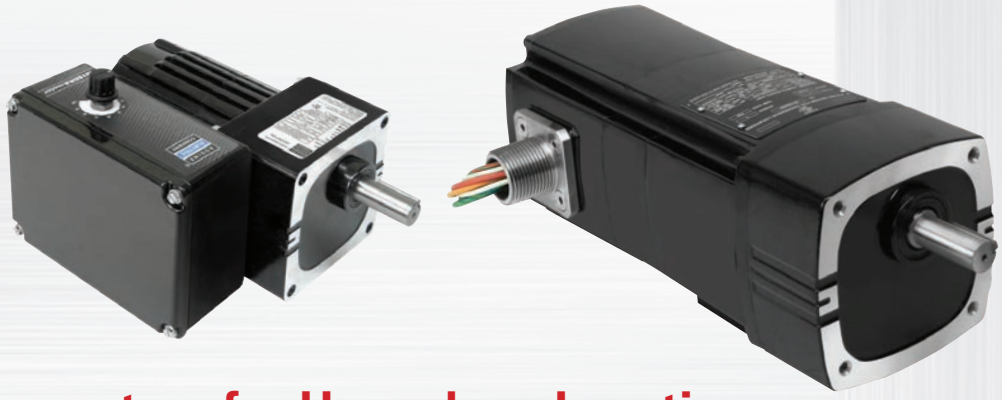

Gearmotors for Hazardous Locations

See pages 10, 11, 13, 24, and 29

Our new Hazardous Location gearmotors meet either NEC Class I, Division 2, or the more strict Class I, Division 1 standards. Our IP-44 **Class I, Division 2** gearmotors are designed for use in environments where flammable gases or vapors may accidentally be spilled or leak into the operating area. For more dangerous environments, our IP-66 **Class I, Division 1** gearmotors can be used where ignitable concentrations of flammable gases, vapors or liquids are likely to exist.

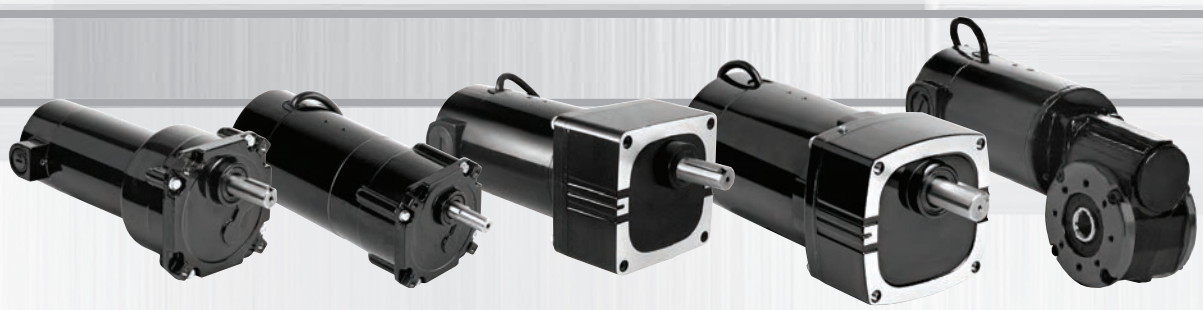

SCR Rated Permanent Magnet DC Gearmotors

See pages 8, 10, 13, 19, and 22

To provide greater flexibility and compatibility with unfiltered SCR controls, we now offer a new selection of 90V and 180VDC gearmotors with a maximum rated armature speed of 2500 rpm. These new SCR rated stock models from Bodine can replace 90V or 180VDC gearmotors sold by Baldor, Bison Gear, Leeson, or Grainger.

Our SCR Rated permanent magnet DC gearmotors operate with an unfiltered SCR speed control while delivering similar speed and torque performance as a PMDC gearmotor that is designed to be operated from a filtered DC speed control or from a PWM speed control. SCR rated PMDC gearmotors or motors are designed to remain within their safe operating temperature range while delivering full rated torque over the entire speed range (when operated with an unfiltered SCR speed control). This is in contrast to PWM-rated PMDC gearmotors or motors which would need to be operated at reduced torque if they were operated with an unfiltered SCR speed control.

PRODUCT NEWS & UPDATES



Hypoid Right Angle Hollow Shaft Gearmotors

See page 22

Bodine's new type 33A7-25H2 and 33A7-30H3 hypoid PMDC gearmotors combine our high-performance 33A7 motor with two high-efficiency hypoid gearheads. They are ideal for mobile, battery powered, and solar powered applications. These new gearmotors are offered with 12 gear ratios (5:1 to 240:1), and expand the Bodine PMDC gearmotor torque range up to 1535 lb.-in (173 Nm). Five winding options are available – 12, 24, 90, 180 and 130 VDC.



Planetary Inline Gearmotors

See page 6

Our new type -60P (60 mm) planetary gearmotors are an easy to connect, high torque-density drive solution. The gearmotors deliver continuous duty torque of up to 226 lb-in (26 Nm) and are available with gear ratios from 4:1 to 162:1. The brushless DC (EC) stock models type 22B4-60P are available with 130V (US/Imperial dimensions) and 24VDC winding (Metric dimensions), and meet IP-44. The totally enclosed type 24A-60P PMDC models feature 90/130 VDC or 24V and 12VDC windings, and meet IP-66 with an add-on shaft seal kit.



Gearmotors

60P Inline / Planetary Gearmotors | up to 226 lb-in.

- Twice the torque of conventional helical/ spur parallel shaft gearboxes of similar size
- Lower-cost alternative to high-end servo systems
- Unvented gearhousing mounts in any orientation
- Permanently lubricated with high-performance lubricant
- Hardened steel gears for long life. Needle bearings for maximum performance.
- Environmental protection: **24A4-60P:** IP-66 (with shaft seal kit installed); **22B4-60P:** IP-44
- **22B4-60P:** 120° commutation
- **22B4-60P:** Encoder compatible with new screw-in encoder shaft option.
- See page 42 for reference dimensions
- See Page 40 for accessories

Permanent Magnet DC Gearmotors



Type 24A-60P

U.S./Imperial Models

Speed (rpm)	Rated Torque (lb-in.)	Rate Current (Amps)	Peak Torque (lb-in.)	Power (HP)	Gear Ratio	Radial Load (lbs.)	Product Type	Item Number
90/130VDC, Totally Enclosed, Non-ventilated, Class F Insulation								
11/15	176/226	0.56 / 0.81	315	1/23 / 1/11	162:1	145	24A4BEPM-60P3	7011
19/28	96/151		278		89:1	120	24A4BEPM-60P3	7009
27/39	72/113		254		64:1	107	24A4BEPM-60P2	7008
57/83	34/54		245		30:1	86	24A4BEPM-60P2	7006
101/147	19/30		182		17:1	72	24A4BEPM-60P2	7004
136/197	14/22		136		13:1	66	24A4BEPM-60P2	7003
216/313	10/15		91		8:1	56	24A4BEPM-60P1	7002
454/658	4.6/7.1		43		4:1	44	24A4BEPM-60P1	7001

Metric Models

(1/min)	(Nm)	(Amps)	(Nm)	(Watts)	(i)	(N)	Product Type	Item No.
24VDC, Totally Enclosed, Non-ventilated, Class F Insulation								
15	26	4.1	36	63	162:1	645	24A4BEPM-60P3	7411
28	16		31		89:1	538	24A4BEPM-60P3	7409
39	12		29		64:1	480	24A4BEPM-60P2	7408
82	5.5		28		30:1	387	24A4BEPM-60P2	7406
146	3.1		20		17:1	320	24A4BEPM-60P2	7404
197	2.3		15		13:1	294	24A4BEPM-60P2	7403
313	1.5		10		8:1	249	24A4BEPM-60P1	7402
658	0.7		5		4:1	196	24A4BEPM-60P1	7401
12VDC, Totally Enclosed, Non-ventilated, Class F Insulation								
15	19	6.9	36	46	162:1	658	24A4BEPM-60P3	7211
28	11		31		89:1	547	24A4BEPM-60P3	7209
39	8		29		64:1	489	24A4BEPM-60P2	7208
82	4		19		30:1	391	24A4BEPM-60P2	7206
146	2		10		17:1	325	24A4BEPM-60P2	7204
197	1.6		8		13:1	294	24A4BEPM-60P2	7203
313	1.1		5		8:1	254	24A4BEPM-60P1	7202
658	0.5		2		4:1	196	24A4BEPM-60P1	7201

Ratings are based on operation from DC power. Performance may vary with a speed control.

Brushless DC Gearmotors



Type 22B-60P

U.S./Imperial Models

Speed (rpm)	Rated Torque (lb-in.)	Rate Current (Amps)	Peak Torque (lb-in.)	Power (HP)	Gear Ratio	Radial Load (lbs.)	Product Type	Item Number
130VDC, Totally Enclosed, Non-ventilated, Class B, Encoder Shaft Option; IP-44								
15	226	0.88	315	1/8	162:1	145	22B4FEBL-60P3	7030
28	218		278		89:1	120	22B4FEBL-60P3	7029
39	176		254		64:1	107	22B4FEBL-60P2	7028
82	84		245		30:1	86	22B4FEBL-60P2	7026
146	47		229		17:1	72	22B4FEBL-60P2	7024
197	35		170		13:1	66	22B4FEBL-60P2	7023
313	24		114		8:1	56	22B4FEBL-60P1	7022
658	11		54		4:1	44	22B4FEBL-60P1	7021

Metric Models

[1/min]	(Nm)	(Amps)	(Nm)	(Watts)	(i)	(N)	Product Type	Item No.
24VDC Totally Enclosed, Non-ventilated, Class B, Encoder Shaft Option; IP-44								
15	26	5.6	36	93	162:1	645	22B4FEBL-60P3	7040
28	25		31		89:1	538	22B4FEBL-60P3	7039
39	20		29		64:1	480	22B4FEBL-60P2	7038
82	9.4		28		30:1	387	22B4FEBL-60P2	7036
146	5.3		23		17:1	320	22B4FEBL-60P2	7034
197	3.9		17		13:1	294	22B4FEBL-60P2	7033
313	2.7		12		8:1	249	22B4FEBL-60P1	7032
658	1.3		5		4:1	196	22B4FEBL-60P1	7031

- Universal horizontal mounting
- Helical primary gear and hardened steel spur gearing on subsequent stages
- Capacitors/accessories: Page 40
- Controls: page 30
- Reference dimensions: page 42 and 45

Variable Speed—Inverter-Duty AC Gearmotors



Type 30R-D Inverter-Duty

Fixed Speed Rating					Variable Speed (SOA) Ratings[1]						Product Type	(230V) Model Number
Speed (rpm)	Torque (lb-in.)	Motor HP	A	Gear Ratio	Speed Range (rpm)	Frequency Range (Hz)	Torque Type	Torque @ 10 Hz (lb-in.)	Torque @ 60 Hz (lb-in.)	Torque @ 90 Hz (lb-in.)		
Three-Phase, Inverter-Duty, Non-synchronous (TENV)												
9	40	1/25	0.38	180	1.2-11.65	10-90	constant	40	40	40	30R2BEPP-D4	2210
19	40	1/25	0.38	90	2.5-23			40	40	40	30R2BEPP-D4	2212
28	40	1/25	0.38	60	3.7-35			40	40	40	30R2BEPP-D3	2214
142	19	1/17	0.48	12	19-175			19	19	19	30R4BEPP-D3	2216
283	7.4	1/17	0.48	6	22-359			7.4	7.4	7.4	30R4BEPP-D3	2218

Fixed Speed—AC Gearmotors



Type 30R-D

Speed (rpm)	Rated Torque (lb-in.)	Motor HP	V	Hz	Ph	Amps	Gear Ratio	Radial Load (lbs.)	Capacitor (µF/VAC)	Product Type	Model Number
Permanent Split Capacitor, Non-synchronous									***CAPACITOR IS REQUIRED***		
3.8	40	1/50	115	60	1	0.33	450	65	4.0/250	30R1BECI-D5	5463
9.4	40	1/50				0.33	180		4.0/250	30R1BECI-D4	5462
19	40	1/50				0.33	90		4.0/250	30R1BECI-D4	5461
28	40	1/30				0.45	60		5.0/250	30R2BECI-D3	5474
57	27	1/30				0.45	30		5.0/250	30R2BECI-D3	5473
94	16	1/30				0.45	18		5.0/250	30R2BECI-D3	5472
140	11	1/30				0.45	12		5.0/250	30R2BECI-D3	5471
285	5	1/30				0.45	6		5.0/250	30R2BECI-D3	5470

Permanent Magnet DC Gearmotors



Type 24A-D

Speed (rpm)	Rated Torque (lb-in.)	Rated Current (Amps)		Peak Torque (lb-in.)	Motor HP	Gear Ratio	Radial Load (lbs.)	Product Type[2]	Accy Shaft	No Accy Shaft	Accy Shaft	No Accy Shaft
		24V	130V						24V		130V	
5.6	40	1.8	0.30	55	1/29	450	65	24A2BEPM-D5	4999	4799	4499	0199
8.3	40	1.8	0.30	55	1/29	300		24A2BEPM-D5	4998	4798	4498	0198
14	40	1.8	0.30	55	1/29	180		24A2BEPM-D4	4997	4797	4497	0197
28	40	1.8	0.30	55	1/29	90		24A2BEPM-D4	4996	4796	4496	0196
42	40	2.6	0.48	55	1/17	60		24A4BEPM-D3	—	4690	—	0190
42	36	1.8	0.30	55	1/29	60		24A2BEPM-D3	4995	4795	4495	0195
83	29	2.6	0.48	33	1/17	30		24A4BEPM-D3	—	—	—	0189
83	18	1.8	0.30	33	1/29	30		24A2BEPM-D3	4994	4794	4494	0194
139	17	2.6	0.48	20	1/17	18		24A4BEPM-D3	—	—	—	0188
139	11	1.8	0.30	20	1/29	18		24A2BEPM-D3	4993	4793	4493	0193
208	12	2.6	0.48	13	1/17	12		24A4BEPM-D3	—	—	—	0187
208	7.1	1.8	0.30	13	1/29	12		24A2BEPM-D3	4992	4792	4492	0192
417	5.4	2.6	0.48	6.2	1/17	6		24A4BEPM-D3	—	—	—	0186
417	3.3	1.8	0.30	6.2	1/29	6		24A2BEPM-D3	4991	4791	4491	0191

Brushless DC Gearmotors



Type 22B-D

Speed (rpm)	Rated Torque (lb-in.)	Rated Current (A)		Peak Torque (lb-in.)	Motor HP	Gear Ratio	Radial Load (lbs.)	Product Type	Accy Shaft	No Accy Shaft	Accy Shaft	No Accy Shaft
		24V	130V						24V		130V	
14	40	3.3	0.53	55	1/16	180	60	22B2BEBL-D4	3636	3536	3433	3333
28	40			55		90		22B2BEBL-D4	3635	3535	3431	3331
42	40			55		60		22B2BEBL-D3	3634	3534	3430	3330
83	29			33		30		22B2BEBL-D3	3629	3529	3429	3329
139	17			20		18		22B2BEBL-D3	3628	3528	3428	3328
208	12			13		12		22B2BEBL-D3	3627	3527	3427	3327
417	5.8			6.2		6		22B2BEBL-D3	3626	3526	3426	3326

[1] SOA: Contact the factory for detailed speed/torque information (Safe Operating Area). See page 25; [2] The fifth character of the product type changes from "B" to "F" for accessory ready models; [3] Type FV INTEGRAmotors require a PWM signal from a motion controller or PLC to operate;

- Unvented gearhousing for universal horizontal mounting
- Permanently lubricated with high-performance lubricant
- Helical primary gear for quietness and hardened steel spur gearing on subsequent stages for high output torque and long life
- Models with accessory shafts are ideal for mounting encoders or brakes
- See Page 43 for capacitors and accessories
- See page 42 for reference dimensions

Variable Speed—Inverter-Duty AC Gearmotors



Type 34R-Z Inverter-Duty

Fixed Speed Rating					Variable Speed (SOA) Ratings[1]						Product Type	(230V) Model Number
Speed (rpm)	Torque (lb-in.)	Motor HP	A	Gear Ratio	Speed Range (rpm)	Frequency Range (Hz)	Torque Type	Torque @ 10 Hz (lb-in.)	Torque @ 60 Hz (lb-in.)	Torque @ 90 Hz (lb-in.)		
Three-Phase, Inverter-Duty, Non-synchronous, 230 VAC (TENV)												
9	120	1/6	0.73	180	0.9-13	10-90	constant	120	120	120	34R6BEPP-Z4	2220
19	120			90	1.8-26			120	120	120	34R6BEPP-Z4	2222
28	120			60	2.8-39			120	120	120	34R6BEPP-Z3	2224
57	96			30	5.5-78			96	96	96	34R6BEPP-Z3	2226
94	39			18	16-143			39	39	39	34R6BEPP-Z2	2227
283	21			6	28-391			21	21	21	34R6BEPP-Z2	2228

Fixed Speed—AC Gearmotors



Type 34R-Z

Speed (rpm)	Rated Torque (lb-in.)	Motor HP	V	Hz	Ph	Amps	Gear Ratio	Radial Load (lbs.)	Capacitor (µF/VAC)	Product Type	Model Number
Permanent Split Capacitor, Non-synchronous										***CAPACITOR IS REQUIRED***	
9.6	100	1/15	115	60	1	1.0	180	125	10.0/250	34R4BFCI-Z4	0449
19	100						90	125		34R4BFCI-Z4	0448
28	100						60	125		34R4BFCI-Z3	0455
57	57						30	125		34R4BFCI-Z3	0454
94	36						18	100		34R4BFCI-Z2	0453
142	24						12	100		34R4BFCI-Z2	0452
283	12						6	100		34R4BFCI-Z2	0451

Permanent Magnet DC Gearmotors



Type 24A-Z



Type 33A-Z

Speed (rpm)	Rated Torque (lb-in.)	Rated Current (Amps)		Peak Torque (lb-in.)	Motor HP	Gear Ratio	Radial Load (lbs.)	Product Type[2]	Accy Shaft	No Accy Shaft	Accy Shaft	No Accy Shaft
		24V	130V						24V		130V	
24A-Z PMDC Gearmotor												
14	100	2.6	0.48	115	1/17	180	125	24A4BEPM-Z4	4963	4663	4563	0163
28	92			115		90	125	24A4BEPM-Z4	4962	4662	4562	0162
42	65			115		60	125	24A4BEPM-Z3	4961	4661	4561	0161
83	33			59		30	125	24A4BEPM-Z3	4960	4660	4560	0160
139	21			38		18	100	24A4BEPM-Z2	4959	4659	4559	0159
208	14			25		12	100	24A4BEPM-Z2	4958	4658	4558	0158
417	7			13		6	100	24A4BEPM-Z2	4957	4657	4557	0157
33A-Z PMDC Gearmotor												
42	95	3.7	0.74	115	1/12	60	125	33A3BEPM-Z3	6969	6669	6569	6169
83	47			59		30	125	33A3BEPM-Z3	6968	6668	6568	6168
139	31			38		18	100	33A3BEPM-Z2	6967	6667	6567	6167
208	20			25		12	100	33A3BEPM-Z2	6966	6666	6566	6166
417	10			13		6	100	33A3BEPM-Z2	6965	6665	6565	6165

SCR Rated—Permanent Magnet DC Gearmotors

see page 4 for details

90V and 180VDC gearmotors with a maximum rated armature speed of 2500 rpm.



Type 24A-Z, SCR Rated



Type 33A-Z SCR Rated

Speed (rpm)	Rated Torque (lb-in.)	Rated Current (Amps)		Form Factor		Peak Torque (lb-in.)	Motor HP		Gear Ratio	Radial Load (lbs.)	Product Type	Model Number	
		90V	180V	90V	180V		90V	180V				90V	180V
Maximum Rated Armature Speed: 2500 rpm													
24A-Z PMDC Gearmotor													
14	120	0.58	0.3	1.6	1.5	139	1/20	1/19	180	166	24A4BEPM-Z4	1245	1236
28	77					126			90	193	24A4BEPM-Z4	1243	1235
42	55					137			60	207	24A4BEPM-Z3	1242	1234
83	27					120			30	225	24A4BEPM-Z3	1241	1233
139	18					48			18	142	24A4BEPM-Z2	1239	1232
208	12					44			12	145	24A4BEPM-Z2	1238	1231
417	6					20			6	147	24A4BEPM-Z2	1237	1230
33A-Z PMDC Gearmotor													
42	120	1.6	0.8	1.4	1.4	137	1/7	1/7	60	166	33A5BEPM-Z3	1189	1179
83	87					120			30	187	33A5BEPM-Z3	1188	1178
139	39					48			18	132	33A5BEPM-Z2	1186	1177
208	36					44			12	132	33A5BEPM-Z2	1185	1176
417	19					20			6	137	33A5BEPM-Z2	1184	1175

Z Parallel Shaft Gearmotors | up to 120 lb-in., *continued*

Brushless DC Gearmotors



Type 22B-Z

Speed (rpm)	Rated Torque (lb-in.)	Rated Current (Amps)		Peak Torque (lb-in.)	Motor HP	Gear Ratio	Radial Load (lbs.)	Product Type [2]	Accy Shaft	No Accy Shaft	Accy Shaft	No Accy Shaft
		24V	130V						24V		130V	
14	100	—	0.72	115	1/11	180	110	22B3BEBL-Z4	—	—	3463	3363
14	100	3.3	0.53	115	1/16	180	110	22B2BEBL-Z4	—	3563	—	—
21	100	3.3	0.53	115	1/16	120	110	22B2BEBL-Z4	—	3564	—	3364
28	100	4.4	0.72	115	1/11	90	110	22B3BEBL-Z4	—	—	3462	3362
28	97	3.3	0.53	115	1/16	90	110	22B2BEBL-Z4	—	3562	—	—
42	95	4.4	0.72	115	1/11	60	110	22B3BEBL-Z3	3661	3561	3461	3361
83	52	4.4	0.72	59	1/11	30	125	22B3BEBL-Z3	3660	3560	3460	3360
139	31	4.4	0.72	38	1/11	18	125	22B3BEBL-Z2	3659	3559	3459	3359
208	20	4.4	0.72	25	1/11	12	120	22B3BEBL-Z2	3658	3558	3458	3358
417	10	4.4	0.72	13	1/11	6	100	22B3BEBL-Z2	3657	3557	3457	3357

WX Parallel Shaft Gearmotors | up to 210 lb-in.

- Selectively hardened steel helical gears
- Synthetic lubricant
- Adaptor plate, model 0995, allows for 3-hole mounting configuration. See Page 39
- See Page 40 for capacitors and accessories
- See page 43 for reference dimensions

Variable Speed—Inverter-Duty AC Gearmotors



Type 34R-WX Inverter-Duty

Fixed Speed Ratings		Motor HP	Amps	Gear Ratio	Variable Speed (SOA) Ratings[1]						Radial Load (lbs.)[3]	Product Type	Model No.
Speed (rpm)	Torque (lb-in.)				Speed Range (rpm)	Frequency Range (Hz)	Torque Type	Torque @ 10 Hz (lb-in.)	Torque @ 60 Hz (lb-in.)	Torque @ 90 Hz (lb-in.)			
34R-WX Inverter-Duty Gearmotor													
Three-Phase, Inverter-Duty, 230/460 VAC, Non-synchronous, Reversible (TEFC)													
5	210	1/6	1.0 / 0.5	312	0.4-7.0	10-90	constant	210	210	210	300	34R4BFPP-WX4	2803
10	205			172	0.7-13			205	205	205	300	34R4BFPP-WX4	2804
17	195			98	1.2-33			195	195	195	300	34R4BFPP-WX4	2805
26	195			66	1.8-33			195	195	195	300	34R4BFPP-WX3	2806
31	190			55	2.2-40			190	190	190	300	34R4BFPP-WX3	2807
39	157			44	2.7-50			157	157	157	300	34R4BFPP-WX3	2808
57	106			30	4.0-73			106	106	106	290	34R4BFPP-WX3	2809
83	77			20	5.9-107			77	77	77	268	34R4BFPP-WX2	2829
123	46			14	8.7-158			46	46	46	250	34R4BFPP-WX2	2830
181	31			9	13-232			31	31	31	226	34R4BFPP-WX2	2831
309	18			6	22-397			18	18	18	195	34R4BFPP-WX2	2832
447	9			4	32-574			9	9	9	179	34R4BFPP-WX2	2833

Fixed Speed—AC Gearmotors



Type 34R-WX

Speed (rpm)	Rated Torque (lb-in.)	Motor HP	V	Hz	Ph	Amps	Gear Ratio	Radial Load (lbs.)[3]	Capacitor (µF/VAC)	Product Type	Model Number
Permanent Split Capacitor, Non-synchronous, 3-Wire-Reversible (TEFC)										***CAPACITOR IS REQUIRED***	
5	210	1/7	115	60	1	1.7	312	300	27.5/250	34R6BFCI-WX4	1034
10	200						172	300		34R6BFCI-WX4	1032
17	195						98	300		34R6BFCI-WX4	1029
26	195						66	300		34R6BFCI-WX3	1027
31	190						55	300		34R6BFCI-WX3	1025
39	157						44	300		34R6BFCI-WX3	1023
57	106						30	290		34R6BFCI-WX3	1021
83	77						20	268		34R6BFCI-WX2	1019
123	46						14	250		34R6BFCI-WX2	1016
181	31						9	226		34R6BFCI-WX2	1014
309	18						6	195		34R6BFCI-WX2	1012
447	9						4	179		34R6BFCI-WX2	1010

[1] SOA: Contact the factory for detailed speed/torque information (Safe Operating Area). See page 25;
[2] The fifth character of the product type changes from "B" to "F" for accessory ready models;
[3] Radial (overhung) loads were calculated 0.5 inches from the end of the drive shaft

Permanent Magnet DC Gearmotors



Type 33A-WX

Speed (rpm) 12/24V	Speed (rpm) 90/130V	Rated Torque (lb-in.)	Amps 12/24V	Amps 90/130V	HP 12/24V	HP 90/130V	FF 90/130V	Gear Ratio	Radial Load (lbs.)[1]	Product Type[2]	Accy 12/24V	No Accy 12/24V	Accy 90/130V	No Accy 90/130V
2.9 / 8.0	5 / 8	205	10.2	1.3 / 1.7	1/11 / 1/4	1/8 / 1/4	1.4 / 1.0	312	300	33A5BEPM-WX4	1422	1222	1452	1072
5 / 15	10 / 15	200						172	300	33A5BEPM-WX4	1420	1220	1450	1070
9 / 26	17 / 26	185						98	300	33A5BEPM-WX4	1418	1218	1448	1068
14 / 38	26 / 38	190						66	290	33A5BEPM-WX3	1416	1216	1446	1066
16 / 46	31 / 46	185						55	270	33A5BEPM-WX3	1414	1214	1444	1064
21 / 57	39 / 57	157						44	262	33A5BEPM-WX3	1412	1212	1442	1062
30 / 84	57 / 84	106						30	252	33A5BEPM-WX3	1410	1210	1440	1060
44 / 123	83 / 123	77						20	234	33A5BEPM-WX2	1408	1208	1438	1058
65 / 181	123 / 181	46						14	220	33A5BEPM-WX2	1406	1206	1436	1056
96 / 266	181/266	31						9	199	33A5BEPM-WX2	1404	1204	1434	1054
164/455	309/455	18						6	173	33A5BEPM-WX2	1402	1202	1432	1052
237/658	447/658	9						4	158	33A5BEPM-WX2	1400	1200	1430	1050

SCR Rated—Permanent Magnet DC Gearmotors

see page 4 for details



Type 33A-WX / SCR Rated

90V and 180VDC gearmotors with a maximum rated armature speed of 2500 rpm.

Speed (rpm)	Rated Torque (lb-in.)	Rated Current (Amps) 90V	Rated Current (Amps) 180V	Form Factor 90V	Form Factor 180V	Motor HP 90V	Motor HP 180V	Gear Ratio	Peak Torque (lb-in.)	Radial Load (lbs.)[1]	Product Type	Model Number 90V	Model Number 180V
8.0	205	1.6	0.8	1.4	1.4	1/7	1/7	312	350	300	33A5BEPM-WX4	1259	1172
15	200							172	350	300	33A5BEPM-WX4	1247	1170
26	185							98	350	300	33A5BEPM-WX4	1257	1168
38	190							66	350	290	33A5BEPM-WX3	1256	1166
46	163							55	350	282	33A5BEPM-WX3	1255	1164
57	131							44	327	262	33A5BEPM-WX3	1254	1162
84	88							30	220	261	33A5BEPM-WX3	1253	1169
123	64							20	160	241	33A5BEPM-WX2	1252	1158
181	39							14	97	224	33A5BEPM-WX2	1251	1154
266	26							9	65	202	33A5BEPM-WX2	1250	1153
455	15							6	37	175	33A5BEPM-WX2	1249	1152
658	9							4	22	158	33A5BEPM-WX2	1248	1150

Brushless DC Gearmotors



Type 34B-WX

Speed (rpm)	Rated Torque (lb-in.)	Rated Current (Amps) 24V	Rated Current (Amps) 130V	Motor HP	Gear Ratio	Radial Load (lbs.)[1]	Product Type[2]	Accy Shaft 24V	No Accy Shaft 24V	Accy Shaft 130V	No Accy Shaft 130V
8	205	9.0	1.4	1/5	312	300	34B3BEBL-WX4	1323	1293	1123	1093
15	200				172	300	34B3BEBL-WX4	1322	1292	1122	1092
26	185				98	300	34B3BEBL-WX4	1320	1290	1120	1090
38	190				66	290	34B3BEBL-WX3	1318	1288	1118	1088
46	185				55	270	34B3BEBL-WX3	1317	1287	1117	1087
57	157				44	262	34B3BEBL-WX3	1316	1286	1116	1086
84	106				30	252	34B3BEBL-WX3	1315	1285	1115	1085
123	77				20	234	34B3BEBL-WX2	1314	1284	1114	1084
181	46				14	220	34B3BEBL-WX2	1313	1283	1113	1083
266	31				9	199	34B3BEBL-WX2	1312	1282	1112	1082
455	18				6	173	34B3BEBL-WX2	1310	1280	1110	1080
658	9				4	158	34B3BEBL-WX2	1309	1279	1109	1079

Brushless DC Gearmotors for Hazardous Locations

New



Type 34B/SR-WX INTEGRA with built-in speed control

Designed for Class I/Division 2, & battery or solar powered applications

Speed (rpm)	Torque (lb-in.)	HP 12 VDC	HP 24 VDC	Gear Ratio	Radial Load (lbs)	Control Input Cont. Amps 12 VDC	Control Input Cont. Amps 24 VDC	Product Type	12 VDC Model No.	24 VDC Model No.
34B4/SR-WX INTEGRA Brushless DC Gearmotor, Class I, Division 2 IP-44										
8	205	1/5	1/4	312	300	19.0	11.0	34B4BEBL/SR-WX4	3293	3893
15	200			172	300			34B4BEBL/SR-WX4	3292	3892
26	185			98	300			34B4BEBL/SR-WX4	3290	3890
38	190			66	290			34B4BEBL/SR-WX3	3288	3888
46	185			55	270			34B4BEBL/SR-WX3	3287	3887
57	157			44	262			34B4BEBL/SR-WX3	3286	3886
84	106			30	252			34B4BEBL/SR-WX3	3285	3885
123	77			20	234			34B4BEBL/SR-WX2	3284	3884
181	46			14	220			34B4BEBL/SR-WX2	3283	3883
266	31			9	199			34B4BEBL/SR-WX2	3282	3882
455	18			6	173			34B4BEBL/SR-WX2	3280	3880
658	9			4	158			34B4BEBL/SR-WX2	3279	3879

[1] Radial (overhung) loads were calculated 0.5 inches from the end of the drive shaft;
[2] The fifth character of the product type changes from "B" to "F" for accessory ready models

- Hardened helical gearing for quietness and high output to size ratio
- Unvented gearhousing for universal horizontal mounting
- Models with accessory shafts are ideal for mounting encoders or brakes
- Page 40: capacitors and accessories
- Page 43: reference dimensions

Fixed and Variable Speed AC Gearmotors for Hazardous Locations



Type 34R-FX Inverter-Duty Explosion-Proof CI/D1

Designed for use in Class I/Division 1 rated environments

34R6-FX Variable Speed – Three-Phase, Inverter-Duty AC Gearmotor, Explosion-Proof Class I, Division 1

230 or 460 VAC (TENV), IP-66, TENV (Groups C and D; Temperature Codes T3C and T4A)

Fixed Speed Rating						Variable Speed (SOA Ratings[1])						Radial Load (Lb-in.)	Product Type	Model Number	
Speed (rpm)	Rated Torque (lb-in)	Motor (HP)	Rated Current (Amps) 230V	Rated Current (Amps) 460V	Gear Ratio	Speed Range (rpm)	Frequency Range (Hz)	Torque Type	Torque (lb-in) @10 Hz	Torque (lb-in) @60 Hz	Torque (lb-in) @90 Hz			230VAC	460VAC
5.3	350	1/4	0.98	0.49	300:1	0.7-7.9	10-90	Constant	350	350	350	274	34R6BXPP-FX4	3229	3274
8.9	350				180:1	1.2-13		Constant	350	350	350	274	34R6BXPP-FX4	3228	3273
13	350				120:1	1.8-20		Constant	350	350	350	274	34R6BXPP-FX4	3227	3272
27	350				60:1	3.6-40		Variable	350	350	321	274	34R6BXPP-FX3	3226	3271
40	265				40:1	5.4-59		Variable	257	265	214	300	34R6BXPP-FX3	3225	3270
53	267				30:1	7.1-79		Variable	192	267	160	300	34R6BXPP-FX3	3224	3269
80	178				20:1	11-119		Variable	128	178	107	300	34R6BXPP-FX3	3223	3268
107	133				15:1	14-158		Variable	96	133	80	300	34R6BXPP-FX2	3222	3267
160	89				10:1	21-237		Variable	64	89	53	300	34R6BXPP-FX2	3221	3266
320	46				5:1	43-474		Variable	33	46	28	60	34R6BXPP-FX1	3220	3265



Type 34R-FX Inverter-Duty Hazardous Location CI/D2

Factory-installed terminal box and terminal block

34R4-FX Variable Speed – Three-Phase, Inverter-Duty AC Gearmotor, Class I, Division 2

230/460 VAC Three-Phase, Inverter-Duty, Non-synchronous (TENV), IP-44

5.7	350	1/6	1.0/0.53 (230/460VAC)	300:1	0.4-7.3	10-90	Constant	350	350	350	274	34R4BFPP-FX4	3259	
9.4	350			180:1	0.7-12		Constant	350	350	350	274	34R4BFPP-FX4	3258	
14	350			120:1	1.0-18		Constant	350	350	350	274	34R4BFPP-FX4	3257	
28	321			60:1	2.0-36		Variable	257	350	350	287	34R4BFPP-FX3	3256	
43	214			40:1	3.0-55		Variable	171	265	265	300	34R4BFPP-FX3	3255	
57	160			30:1	4.0-73		Variable	128	255	221	300	34R4BFPP-FX3	3254	
85	107			20:1	6.0-110		Variable	86	170	147	300	34R4BFPP-FX3	3253	
113	80			15:1	8.0-145		Variable	64	127	111	300	34R4BFPP-FX2	3252	
170	53			10:1	12-218		Variable	43	85	74	300	34R4BFPP-FX2	3251	
340	28			5:1	24-436		Variable	22	44	38	61	34R4BFPP-FX1	3250	



Type 34R-FX Fixed Speed Hazardous Location CI/D2

Factory-installed terminal box, terminal block, and pre-wired run capacitor

34R-FX Fixed Speed AC Gearmotors, Class I, Division 2

Permanent Split Capacitor, Non-synchronous, 3-wire Reversible (TEFC), IP-44 — ***CAPACITOR IS PRE-INSTALLED***

Speed (rpm)	Torque (lb-in.)	Motor HP	VAC	Hz	Ph	Amps	Gear Ratio	Radial Load (lbs.)	Capacitor (µF/VAC)	Product Type	Model Number
5.7	350	1/7	115	1	60	1.6	300:1	274	Factory installed 27.5 / 250	34R6BFCI-FX4	3249
9	350						180:1	274		34R6BFCI-FX4	3248
14	350						120:1	274		34R6BFCI-FX4	3247
28	273						60:1	300		34R6BFCI-FX3	3246
43	182						40:1	300		34R6BFCI-FX3	3245
57	137						30:1	300		34R6BFCI-FX3	3244
85	91						20:1	300		34R6BFCI-FX3	3243
113	68						15:1	300		34R6BFCI-FX2	3242
170	46						10:1	300		34R6BFCI-FX2	3241
340	24						5:1	62		34R6BFCI-FX1	3240

These gearmotors are supplied with a factory-installed large terminal box, terminal block, and PSC models with pre-wired run capacitor (27.5 µF/250 VAC).

Variable Speed—Inverter-Duty AC Gearmotors



Type 34R-FX Inverter-Duty



Type 42R-FX Inverter-Duty

Fixed Speed Rating						Variable Speed (SOA) Ratings[1]						Product Type	230V Model No.	230/460V Model No.
Speed (rpm)	Torque (lb-in.)	HP	(230V) Amps	(230/460V) Amps	Gear Ratio	Speed Range (rpm)	Frequency Range (Hz)	Torque Type	Torque @ 10 Hz (lb-in.)	Torque @ 60 Hz (lb-in.)	Torque @ 90 Hz (lb-in.)			
34R-FX Inverter-Duty AC Gearmotor														
Three-Phase, Inverter-Duty, Non-synchronous (TEFC)														
5.7	350	1/6	1.0	1.0/0.5	300	0.4-7.3	10-90	constant	350	350	350	34R4BFPP-FX4	2256	2856
9.4	350				180	0.7-12		constant	350	350	350	34R4BFPP-FX4	2250	2850
19	350				90	1.3-24		constant	350	350	350	34R4BFPP-FX4	2251	2851
28	321				60	2.0-36		variable	256	350	350	34R4BFPP-FX3	2252	2852
57	160				30	4.0-73		variable	128	255	221	34R4BFPP-FX3	2253	2853
170	53				10	12-218		variable	43	85	74	34R4BFPP-FX2	2254	2854
340	28				5	24-436		variable	22	44	38	34R4BFPP-FX1	2255	2855
42R-FX Inverter-Duty AC Gearmotor														
Three-Phase, Inverter-Duty, Non-synchronous (TEFC)														
57	270	3/8	1.9	1.9/0.95	30	5.9-77	10-90	constant	270	270	270	42R6BFPP-FX3	2260	2860
85	240				20	8.8-115		variable	187	240	240	42R6BFPP-FX3	2261	2861
113	184				15	12-153		variable	140	186	186	42R6BFPP-FX2	2264	2864
170	123				10	18-229		variable	93	124	124	42R6BFPP-FX2	2262	2862
340	58				5	35-459		variable	48	58	58	42R6BFPP-FX1	2263	2863

Fixed Speed—AC Gearmotors



Type 42R-FX

Speed (rpm)	Rated Torque (lb-in.)	Motor HP	V	Hz	Ph	Amps	Gear Ratio	Radial Load (lbs.)	Capacitor (µF/VAC)	Product Type	Model Number
42R-FX Fixed Speed AC Gearmotors											
Permanent Split Capacitor, Three-Wire Reversible, Non-Synchronous									***CAPACITOR IS REQUIRED***		
5.7	350	1/4	115	60	1	2.9	300	200	45.0/250	42R6BFCI-FX4	5671
9.4	350						180	200		42R6BFCI-FX4	5669
14	350						120	200		42R6BFCI-FX4	5668
28	350						60	200		42R6BFCI-FX3	5685
57	243						30	300		42R6BFCI-FX3	5683
85	162						20	300		42R6BFCI-FX3	5681
115	122						15	300		42R6BFCI-FX2	5682
170	81						10	300		42R6BFCI-FX2	5680
340	42						5	60		42R6BFCI-FX1	5679
Split Phase (with centrifugal switch), Non-synchronous											
5.7	350	1/6	115	60	1	3.6	300	200	—	42R5BFSI-FX4	5639
9.4	350						180	200	—	42R5BFSI-FX4	5637
14	350						120	200	—	42R5BFSI-FX4	5636
19	350						90	200	—	42R5BFSI-FX4	5635
28	321						60	200	—	42R5BFSI-FX3	0655
42	214						40	200	—	42R5BFSI-FX3	0654
57	160						30	300	—	42R5BFSI-FX3	0653
85	107						20	300	—	42R5BFSI-FX3	0652
115	80						15	300	—	42R5BFSI-FX2	0651
170	53						10	300	—	42R5BFSI-FX2	0650
340	28						5	60	—	42R5BFSI-FX1	0649



Type 48R-FX

Speed (rpm)	Rated Torque (lb-in.)	Motor HP	V	Hz	Ph	Amps	Gear Ratio	Radial Load (lbs.)	Capacitor (µF/VAC)	Product Type	Model Number
48R-FX Fixed Speed AC Gearmotor											
Permanent Split Capacitor, Non-synchronous									***CAPACITOR IS REQUIRED***		
57	270	1/3	115/230	60	1	4.0/2.0	30	300	115V=20.0/370 230V=12.5/370	48R6BFCI-FX3	5694
85	218						20	300		48R6BFCI-FX3	5693
113	164						15	300		48R6BFCI-FX2	5695
170	109						10	300		48R6BFCI-FX2	5692
340	56						5	60		48R6BFCI-FX1	5691
Split Phase (with centrifugal switch), Non-synchronous											
57	270	1/3	115/230	60	1	4.8/2.4	30	300	—	48R6BFSI-FX3	0664
85	218						20	300	—	48R6BFSI-FX3	0663
170	109						10	300	—	48R6BFSI-FX2	0662
340	56						5	60	—	48R6BFSI-FX1	0661

Permanent Magnet DC Gearmotors



Type 42A5-FX

Speed (rpm)	Rated Torque (lb-in.)	Rated Current (Amps)	Peak Torque (lb-in.)	Motor HP	FF	Gear Ratio	Radial Load (lbs.)	Product Type [2]	Accy Shaft 12/24V	No Accy Shaft 12/24V	Accy Shaft 90/130V	No Accy Shaft 90/130V
42A-FX Gearmotor												
90/130V Class F Temperature Rating												
6 / 8	350 / 350	2.1 / 2.8	500	3/16 / 3/8	1.4 / 1.0	300	200	42A5BEPM-FX4	—	—	5059	5049
10 / 14	350 / 350		500			180	200	42A5BEPM-FX4	—	—	5058	5048
14 / 21	350 / 350		500			120	200	42A5BEPM-FX4	—	—	5057	5047
29 / 42	350 / 350		450			60	200	42A5BEPM-FX3	—	—	5056	5046
43 / 63	239 / 265		320			40	300	42A5BEPM-FX3	—	—	5055	5045
58 / 83	179 / 248		400			30	300	42A5BEPM-FX3	—	—	5054	5044
86 / 125	119 / 165		270			20	300	42A5BEPM-FX3	—	—	5053	5043
115 / 167	89 / 124		290			15	300	42A5BEPM-FX2	—	—	5052	5042
173 / 250	60 / 83		195			10	300	42A5BEPM-FX2	—	—	5051	5041
345 / 500	31 / 43		72			5	60	42A5BEPM-FX1	—	—	5050	5040
12/24V Class F Temperature Rating												
3 / 8	350	14	500	1/7 / 3/8	1.0	300	200	42A5BEPM-FX4	5079	5069	—	—
6 / 14	350		500			180	200	42A5BEPM-FX4	5078	5068	—	—
8 / 21	350		500			120	200	42A5BEPM-FX4	5077	5067	—	—
17 / 42	350		450			60	200	42A5BEPM-FX3	5076	5066	—	—
25 / 63	265		320			40	300	42A5BEPM-FX3	5075	5065	—	—
33 / 83	248		400			30	300	42A5BEPM-FX3	5074	5064	—	—
50 / 125	165		270			20	300	42A5BEPM-FX3	5073	5063	—	—
67 / 167	124		290			15	300	42A5BEPM-FX2	5072	5062	—	—
100 / 250	83		195			10	300	42A5BEPM-FX2	5071	5061	—	—
200 / 500	43		72			5	60	42A5BEPM-FX1	5070	5060	—	—

[1] SOA: Contact the factory for detailed speed/torque information (Safe Operating Area). See page 25; [2] The fifth character of the product type changes from "B" to "F" for accessory ready models; [3] Type FV INTEGRAmotors require a PWM signal from a motion controller or PLC to operate; ** INTEGRAmotor can be ordered with either analog (/SR) or digital (/FV) interface option

SCR Rated—Permanent Magnet DC Gearmotors

see page 4 for details



Type 42A5-FX / SCR Rated

90V and 180VDC gearmotors with a maximum rated armature speed of 2500 rpm.

Speed (rpm)[1]	Rated Torque (lb-in.)	Rated Current (Amps)		Form Factor		Motor HP		Gear Ratio	Peak Torque (lb-in.)	Radial Load (lbs.)	Product Type	Model Number	
		90V	180V	90V	180V	90V	180V					90V	180V
8.3	350	2.2	1.2	1.5	1.6	1/4	1/4	300	500	214	42A5BEPM-FX4	1510	5149
14	350							180	500	214	42A5BEPM-FX4	1509	5148
21	350							120	500	214	42A5BEPM-FX4	1508	5147
42	290							60	470	233	42A5BEPM-FX3	1507	5146
63	194							40	335	254	42A5BEPM-FX3	1506	5145
83	145							30	400	281	42A5BEPM-FX3	1505	5144
125	97							20	280	292	42A5BEPM-FX3	1504	5143
167	73							15	290	300	42A5BEPM-FX2	1503	5142
250	48							10	195	300	42A5BEPM-FX2	1502	5141
500	25							5	72	48	42A5BEPM-FX1	1501	5140

Brushless DC Gearmotors for Hazardous Locations

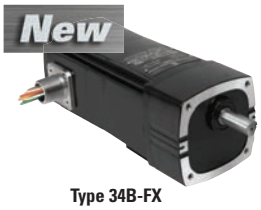

Type 34B-FX Explosion-Proof CI/D1

Designed for use in Class I/Division 1 rated environments

Speed (rpm)		Rated Torque (lb-in)		Power (HP)		Rated Current (Amps)		Gear Ratio	Radial Load (lbs)	Product Type	Model Number	
12V	24V	12V	24V	12V	24V	12V	24V				12V	24V
34B-FX BLDC Gearmotor, (8-Pole, 120° commutation) TENV, IP-66 (Groups C and D; Temperature Codes T3C and T4A) Explosion-Proof CI/D1												
7.3	9.3	350	350	0.47 (351 Watts)	0.66 (492 Watts)	38	25	300:1	274	34B6BXBL-FX4	3209	3219
12	16	350	350					180:1	274	34B6BXBL-FX4	3208	3218
18	23	350	350					120:1	274	34B6BXBL-FX4	3207	3217
37	47	350	350					60:1	274	34B6BXBL-FX3	3206	3216
55	70	265	265					40:1	291	34B6BXBL-FX3	3205	3215
73	93	270	270					30:1	300	34B6BXBL-FX3	3204	3214
110	140	240	240					20:1	300	34B6BXBL-FX3	3203	3213
147	187	181	186					15:1	300	34B6BXBL-FX2	3202	3212
220	280	121	124					10:1	300	34B6BXBL-FX2	3201	3211
440	560	58	58					5:1	56	34B6BXBL-FX1	3200	3210

Brushless DC Gearmotors



Type 34B-FX

Speed (rpm)	Rated Torque (lb-in.)	Rated Current (Amps)		Peak Torque (lb-in.)	Motor HP	Gear Ratio	Radial Load (lbs.)	Product Type[2,3]	Accy Shaft	No Accy Shaft	Accy Shaft	No Accy Shaft
		24V	130V						24V		130V	
8.3	350	9.6	1.6	475	1/5	300	220	34B3BEBL-FX4	—	3575	—	3375
14	350	9.6	1.6	475	1/5	180	200	34B3BEBL-FX4	—	3574	—	3374
21	350	9.6	1.6	475	1/5	120	195	34B3BEBL-FX4	—	3573	—	3373
42	327	12	2.0	421	1/4	60	240	34B4BEBL-FX3	3685	3585	3485	3385
83	164	12	2.0	318	1/4	30	300	34B4BEBL-FX3	3683	3583	3483	3383
125	109	12	2.0	220	1/4	20	300	34B4BEBL-FX3	3682	3582	3482	3382
250	55	12	2.0	106	1/4	10	300	34B4BEBL-FX2	3680	3580	3480	3380
500	28	12	2.0	55	1/4	5	60	34B4BEBL-FX1	—	3579	—	3379

[1] SOA: Contact the factory for detailed speed/torque information (Safe Operating Area). See page 25;
[2] The fifth character of the product type changes from "B" to "F" for accessory ready models;
[3] All 34B-E/F stock gearmotors have been upgraded to the new 34B-FX configuration

- Unvented gearhousing
- Flexible mounting and high torque in a compact package
- Face-mount from drive shaft side
- See page 40 for capacitors and terminal boxes
- See Page 41 for shaft kits
- See page 44 for reference dimensions

Variable Speed—Inverter-Duty AC Gearmotors



Type 42R-HG Inverter-Duty



Type 42R-HG/H Inverter-Duty Hollow Shaft

Fixed Speed Rating					Variable Speed (SOA) Ratings[1]						Radial Load (lbs.)	Product Type	Model Number	
Speed (rpm)	Torque (lb-in.)	Motor HP	A	Gear Ratio	Speed Range (rpm)	Frequency Range (Hz)	Torque Type	Torque @ 10 Hz (lb-in.)	Torque @ 60 Hz (lb-in.)	Torque @ 90 Hz (lb-in.)			230V	230/460V
Three-Phase, Inverter-Duty, Non-synchronous (TEFC)														
16	1020	3/8	1.9	108	1.6-21.2	10-90	variable	896	1020	1020	443	42R6BFPP-HG	2245	—
30	610			56	3.2-41			464	776	675	462		2247	—
38	490			45	3.9-51			373	623	542	444		2248	—
63	294			27	6.6-85			224	374	325	403		2249	—
Hollow Shaft, 230/460VAC, Three-Phase, Inverter-Duty (TEFC)														
16	1020	3/8	1.9 / 0.95	108	1.6-21.2	10-90	variable	896	1020	1020	336	42R6BFPP-HG/H	—	2645
30	610			56	3.2-41			464	776	675	323		—	2647
38	490			45	3.9-51			373	623	542	315		—	2648
63	294			27	6.6-85			224	374	325	294		—	2649

Fixed Speed—AC Gearmotors



Type 42R-HG

Speed (rpm)	Rated Torque (lb-in.)	Motor HP	V	Hz	Ph	Amps	Gear Ratio	Radial Load (lbs.)	Capacitor (µF/VAC)	Product Type	Model Number
Permanent Split Capacitor, Non-synchronous (TEFC)									***RUN CAPACITOR IS REQUIRED***		
16	621	1/5	115	60	1	2.7	108	691	30.0/250	42R6BFCI-HG	5255
30	322						56	609			5257
38	259						45	573			5258
63	155						27	501			5259

Permanent Magnet DC Gearmotors



Type 33A-HG

Speed (rpm)	Rated Torque (lb-in.)	Rated Current (Amps)		Motor HP	Gear Ratio	Radial Load (lbs.)	Product Type[2]	Accy Shaft	No Accy Shaft	Accy Shaft	No Accy Shaft
		24V	90/130V					24V		90/130V	
24V Models With Class F Temperature Rating											
23	680	12	—	1/3	108	350	33A7BEPM-HG	6823	6423	—	—
45	353				56			6845	6445	—	—
56	284				45			6856	6456	—	—
93	170				27			6893	6493	—	—
90/130V Models With Class F Temperature Rating											
16 / 23	481 / 680	—	1.8 / 2.4	1/6 / 1/3	108	350	33A7BEPM-HG	—	—	6323	6023
31 / 45	249 / 353				56			—	—	6345	6045
38 / 56	200 / 284				45			—	—	6356	6056
64 / 93	120 / 170				27			—	—	6393	6093

Permanent Magnet DC Gearmotors (Hollow Shaft)

New



Type 33A-HG/H Hollow Shaft

See optional encoder shaft kit, model 0964 page 41

Speed (rpm)	Rated Torque (lb-in)	Peak Torque (lb-in)	Rated Current (Amps)	Motor HP	Form Factor	Gear Ratio	Radial Load	Product Type	Model Number
130V With Class F Temperature Rating									
23	702	1300	2.3	1/3	1.0	108	344	33A7FEPM-HG/H	6073
45	364	1100				56	321		6072
56	292	1100				45	309		6071
93	176	800				27	277		6070
90V With Class F Temperature Rating									
23	524	1300	2.2	1/4	1.4	108	386	33A7FEPM-HG/H	6077
45	272	1100				56	342		6076
56	218	1100				45	326		6075
93	131	800				27	288		6074
180V With Class F Temperature Rating									
23	416	1300	1.1	1/5	1.5	108	411	33A7FEPM-HG/H	6081
45	216	1100				56	355		6080
56	173	1100				45	337		6079
93	104	800				27	294		6078
24V With Class F Temperature Rating									
23	702	1300	14	1/3	1.0	108	344	33A7FEPM-HG/H	6085
45	364	1100				56	321		6084
56	292	1100				45	309		6083
93	176	800				27	277		6082
12V With Class F Temperature Rating									
23	416	1300	17	1/5	1.0	108	411	33A7FEPM-HG/H	6089
45	216	1100				56	355		6088
56	173	1100				45	337		6087
93	104	800				27	294		6086

CG Parallel Shaft Gearmotors | up to 1,000 lb-in.

- Unvented gearhousing
- Selectively hardened steel gears and hardened steel spur gearing
- Heavy-duty bearings / seals
- Face or base mounting
- Oversize drive shaft
- See page 40 for accessories
- See page 44 for reference dimensions

Variable Speed—Inverter-Duty AC Gearmotors



Type 48R-CG Inverter-Duty

Fixed Speed Rating					Variable Speed (SOA) Ratings[1]						Radial Load (lbs.)	Product Type	230/460V Model Number
Speed (rpm)	Torque (lb-in.)	Motor HP	(230/460V) Amps	Gear Ratio	Speed Range (rpm)	Frequency Range (Hz)	Torque Type	Torque @ 10 Hz (lb-in.)	Torque @ 60 Hz (lb-in.)	Torque @ 90 Hz (lb-in.)			
Three-Phase, Inverter-Duty, Non-synchronous (TEFC)													
28	1000	3/4	2.7/1.3	60	2.7-38	10-90	Constant	1,000	1,000	1,000	250	48R6BFPP-CG	9360
34	850			50	3.2-46			850	850	850			9350
47	650			36	4.4-63			650	650	650			9336
57	540			30	5.3-76			540	540	540			9330
85	360			20	8.0-114			360	360	360			9320

Permanent Magnet DC Gearmotors



Type 42A-CG

Speed (rpm)	Rated Torque (lb-in.)	Rated Current (Amps)	Motor HP	Gear Ratio	Radial Load (lbs.)	Product Type[2]	Accy Shaft	No Accy Shaft	Accy Shaft	No Accy Shaft
							24V		130V	
24V Models With Class F Temperature Rating										
38	660	18	7/16	60	250	42A7BEPM-CG	4886	4486	—	—
46	550			50			4885	4485	—	—
64	400			36			4884	4484	—	—
77	330			30			4883	4483	—	—
115	220			20			4882	4482	—	—
130V Models with Class F Temperature Rating										
42	580	3.3	7/16	60	250	42A7BEPM-CG	—	—	4786	4086
50	480			50			—	—	4785	4085
69	350			36			—	—	4784	4084
83	290			30			—	—	4783	4083
125	190			20			—	—	4782	4082

A/T Parallel Shaft Gearmotors | up to 120 oz-in.

- Totally enclosed, non-ventilated IP-20 rating
- Three-wire winding simplifies reversing
- Impedance protected
- Capacitor is included
- See page 45 for reference dimensions

Fixed Speed—AC Gearmotors



Type K-2A/T

Speed (rpm)	Rated Torque (oz-in.)	Motor HP	V	Hz	Ph	Amps	Gear Ratio	Radial Load (oz.)	Capacitor (µF/VAC)	Product Type	Model Number
Permanent Split Capacitor Normal Slip, Non-synchronous									CAPACITOR IS INCLUDED		
0.9	120	1/700	115	60	1	0.07	1800	20	0.9/250	KCI-22T5	0727
1.9	100	1/700				0.07	900		0.9/250	KCI-22T5	0726
5.6	95	1/700				0.07	300		0.9/250	KCI-22T4	0724
9	95	1/700				0.07	180		0.9/250	KCI-22T4	0723
13	95	1/450				0.083	120		1.0/250	KCI-23T4	0722
22	95	1/300				0.11	72		1.3/250	KCI-24T4	0733
26	80	1/300				0.11	60		1.3/250	KCI-24T3	0732
52	34	1/450				0.083	30		1.0/250	KCI-23A2	0719
52	59	1/300				0.11	30		1.3/250	KCI-24A2	0731
86	21	1/450				0.083	18		1.0/250	KCI-23A2	0718
86	35	1/300				0.11	18		1.3/250	KCI-24A2	0730
130	24	1/300				0.11	12		1.3/250	KCI-24A2	0729
260	12	1/300				0.11	6		1.3/250	KCI-24A2	0728
Permanent Split Capacitor High Slip, Non-synchronous									CAPACITOR IS INCLUDED		
0.9	120	1/1000	115	60	1	0.072	1800	20	0.9/250	KCI-22T5	0746
2.3	95	1/1000				0.072	600		0.9/250	KCI-22T5	0744
4.9	95	1/1000				0.072	300		0.9/250	KCI-22T4	0743
10	88	1/800				0.083	120		1.0/250	KCI-23T4	0741
20	80	1/450				0.1	60		1.2/250	KCI-24T3	0750
40	44	1/450				0.1	30		1.2/250	KCI-24A2	0749
67	16	1/800				0.083	18		1.0/250	KCI-23A2	0737
67	27	1/450				0.1	18		1.2/250	KCI-24A2	0748
200	8.9	1/450				0.1	6		1.2/250	KCI-24A2	0747
Permanent Split Capacitor, Synchronous									CAPACITOR IS INCLUDED		
1	120	1/2000	115	60	1	0.069	1800	20	0.9/250	KYC-22T5	0767
2	100	1/2000				0.069	900		0.9/250	KYC-22T5	0766
3	88	1/2000				0.069	600		0.9/250	KYC-22T5	0765
10	72	1/900				0.093	180		1.3/250	KYC-24T4	0776
15	20	1/2000				0.069	120		.09/250	KYC-22T4	0762
15	48	1/900				0.093	120		1.3/250	KYC-24T4	0775
25	29	1/900				0.093	72		1.3/250	KYC-24T4	0774
60	15	1/900				0.093	30		1.3/250	KYC-24A2	0772
100	8.9	1/900				0.093	18		1.3/250	KYC-24A2	0771

- Unvented gearhousing for universal horizontal mounting
- Permanently lubricated with high-performance lubricant
- Bronze gear for high shock load capability
- Hardened and ground worm for high strength and long life
- Models with accessory shafts are ideal for mounting encoders or brakes
- See Page 40 for capacitors and accessories
- See pages 45 for reference dimensions

Variable Speed—Inverter-Duty AC Gearmotors



Type 30R-3N Inverter-Duty

Fixed Speed Rating					Variable Speed (SOA) Ratings[1]						Product Type	230V Model Number
Speed (rpm)	Torque (lb-in.)	Motor HP	A	Gear Ratio	Speed Range (rpm)	Frequency Range (Hz)	Torque Type	Torque @ 10 Hz (lb-in.)	Torque @ 60 Hz (lb-in.)	Torque @ 90 Hz (lb-in.)		
Three-Phase, Inverter-Duty, Non-synchronous Motor (TENV)												
28	37	1/17	0.48	60	2.2-36	10-90	constant	37	37	37	30R4BEPP-3N	2290
34	36			50	2.7-43		variable	33	37	37		2292
43	37			40	3.3-54		constant	37	37	37		2293
85	25			20	6.6-108		variable	24	36	36		2294
170	14			10	13-216		variable	16	28	22		2296
340	8			5	27-431		variable	9	15	12		2297

Fixed Speed—AC Gearmotors



Type 34R-3F

Speed (rpm)	Rated Torque (lb-in.)	Motor HP	V	Hz	Ph	Amps	Gear Ratio	Radial Load (lbs.)	Capacitor (µF/VAC)	Product Type	Model Number
Permanent Split Capacitor, Non-synchronous										***CAPACITOR IS REQUIRED***	
28	37	1/15	115	60	1	1.0	60	40	10.0/250	34R4BFCI-3F	0492
43	37						40	40			0491
57	30						30	40			0487
85	27						20	40			0490
113	20						15	5			0489
170	16						10	5			0488

Permanent Magnet DC Gearmotors



Type 24A-3F (Mounting from base of gearhead)



Type 24A-3F (Mounting from base of motor)



Type 24A-3F/H Hollow Shaft

Speed (rpm)	Rated Torque (lb-in.)	Rated Current (Amps)		Peak Torque (lb-in.)	Motor HP	FF	Gear Ratio	Radial Load (lbs.)	Product Type[2]	Accy Shaft	No Accy Shaft	Accy Shaft	No Accy Shaft
		24V	130V							24V		130V	
Mounting From Base Of Gearhead													
42	22	2.6	0.48	46	1/17	1.0	60	40	24A4BEPM-3F	4899	4699	4099	0099
63	19			46			40	40		4898	4698	4098	0098
125	16			32			20	5		4896	4696	4096	0096
250	10			20			10	5		4894	4694	4094	0094
500	5.2			10			5	5		4893	4693	4093	0093
Mounting From Base Of Motor													
42	22	—	0.48	46	1/17	1.0	60	40	24A4BEPM-3F	—	—	—	0089
63	19	—		46			40	40		—	—	—	0088
125	16	—		32			20	5		—	—	—	0087
250	10	—		20			10	5		—	—	—	0086
500	5.2	—		10			5	5		—	—	—	0084
Hollow Shaft													
24 V Models With Class F Temperature Rating													
250	14	3.7	—	20	1/13	—	10	60	24A4BEPM-3F/H	—	7694	—	—
500	6.8		—	10		—	5	70		7893	—	—	—
90 V/130 V Models With Class F Temperature Rating													
29/42	35 / 37	—	0.56 / 0.81	46	1/23 / 1/11	1.4 / 1.0	60	100	24A4BEPM-3F/H	—	—	—	7099
43/63	29 / 37	—		46			40	90		—	—	—	7098
86/125	18 / 26	—		32			20	80		—	—	—	7096
173/250	10 / 16	—		20			10	70		—	—	—	7094
345/500	5.5 / 8.2	—		10			5	60		—	—	—	7093

[1] SOA: Contact the factory for detailed speed/torque information (Safe Operating Area). See page 25; [2] The fifth character of the product type changes from "B" to "F" for accessory ready models; [3] E-type only: selectively hardened all steel helical gears for long life; Most FX models ship within 2-5 business days.

3N/3F Right Angle Gearmotors | up to 37 lb-in., *continued*

Brushless DC Gearmotors


Type 22B-3N

Speed (rpm)	Rated Torque (lb-in.)	Rated Current (Amps)		Peak Torque (lb-in.)	Motor HP	Gear Ratio	Radial Load (lbs.)	Product Type[2]	Accy Shaft	No Accy Shaft	Accy Shaft	No Accy Shaft
		24V	130V						24V		130V	
42	37	5.9	1.0	147	1/8	60	100	22B4BEBL-3N	3665	3565	3421	3321
62	37			123		40	90		3666	3566	3422	3322
125	35			74		20	80		3667	3567	3423	3323
250	22			46		10	70		3668	3568	3424	3324
500	11			23		5	60		3669	3569	3425	3325

5R/5L Right Angle Gearmotors | up to 77 lb-in.

- Unvented gearhousing for horizontal mounting
- High-performance lubricant
- Bronze gear for high shock load capability
- Hardened and ground worm for high strength and long life
- Capacitors and terminal boxes, page 40
- Reference dimensions, page 46

Fixed Speed—AC Gearmotors


Type 34R-5R


Type 42R-5L

Speed (rpm)	Rated Torque (lb-in.)	Motor HP	V	Hz	Ph	Amps	Gear Ratio	Radial Load (lbs.)	Capacitor (µF/VAC)	Product Type	Model Number
34R-5R Permanent Split Capacitor, Non-synchronous, Class B Temperature Rating (TEFC)										***CAPACITOR IS REQUIRED***	
28	33	1/15	115	60	1	1.0	60	50	10.0/250	34R4BFCI-5R	0469
43	49						40	50			0468
85	32						20	50			0466
170	18						10	30			0465
42R-5L Permanent Split Capacitor, Non-synchronous, Class B Temperature Rating (TEFC)										***CAPACITOR IS REQUIRED***	
43	77	1/8	115	60	1	1.7	40	80	12.5/250	42R4BFCI-5L	0627
57	75						30	80			0626
85	54						20	80			0624
170	31						10	10			0623
42R4-5L Split Phase, Non-synchronous, Class B Temperature Rating (TEFC)											
43	77	1/8	115	60	1	3.0	40	80	—	42R4BFSI-5L	0620
57	75						30	80	—		0619
85	54						20	80	—		0618
170	31						10	10	—		0617

Permanent Magnet DC Gearmotors


Type 33A-5R


Type 42A-5L

Speed (rpm)	Rated Torque (lb-in.)	130V Rated Current (Amps)	Peak Torque (lb-in.)	Motor HP	FF	Gear Ratio	Radial Load (lbs.)	Product Type	Model Number
33A-5R 130V Models With Class B Temperature Rating, Grease Lubrication									
50	45	0.71	118	1/12	1.0	40	80	33A3BEPM-5R	6128
67	41		83			30	80		6127
100	29		44			20	80		6126
200	17		23			10	80		6125
33A-5L 130V Models With Class F Temperature Rating, Oil Lubrication									
50	77	1.4	179	1/6	1.0	40	80	33A5BEPM-5L	6119
67	75		169			30	80		6118
100	63		159			20	80		6117
200	37		91			10	80		6116
42A-5L 130V Models With Class F Temperature Rating, Oil Lubrication									
33	117	1.3	185	1/6	1.0	60	80	42A4BEPM-5L	4120
50	77		177			40	80		4119
67	75		169			30	80		4118
100	63		159			20	80		4117
200	37		91			10	80		4116

5N/5L Right Angle Gearmotors | up to 117 lb-in.

- *Type 5N only:* Needle bearings on driveshaft for high radial load capacity and long life
- *Type 5L/H only:* Ball bearings for high radial load and long life
- Unvented gearhousing
- Bronze worm gear for high shock load capability
- Hardened and ground worm for strength and long life
- See page 40 for capacitors and terminal boxes
- See pages 46 for reference dimensions

Variable Speed—Inverter-Duty AC Gearmotors



Type 42R-5N



Type 42R-5L/H

Fixed Speed Rating						Variable Speed (SOA) Ratings[1]						Product Type	230V Model No.	230/460V Model No.
Speed (rpm)	Torque (lb-in.)	HP	(230V) A	(230/460V) A	Gear Ratio	Speed Range (rpm)	Frequency Range (Hz)	Torque Type	Torque @ 10 Hz (lb-in.)	Torque @ 60 Hz (lb-in.)	Torque @ 90 Hz (lb-in.)			
42R-5N Gearmotor														
Three-Phase, Inverter-Duty, Non-synchronous (TEFC)														
23	121	3/8	1.90	1.90/0.95	75	2.4-31	10-90	constant	116	116	116	42R6BFPP-5N	2270	2870
43	113				40	4.4-57		constant	109	109	109		2271	2871
57	109				30	5.9-77		constant	104	104	104		2275	2875
85	103				20	8.9-115		constant	98	98	98		2272	2872
170	101				10	18-229		variable	66	105	101		2273	2873
340	54				5	35-458		variable	38	68	59		2274	2874
42R-5L/H Hollow Shaft Gearmotor														
Three-Phase, Inverter-Duty, Non-Synchronous (TEFC)														
23	121	3/8	1.90	1.90/0.95	75	2.4-31	10-90	variable	121	121	116	42R6BFPP-5L/H	2470	2670
43	113				40	4.4-57		constant	109	109	109		2471	2671
57	109				30	5.9-77		constant	104	104	104		2475	2675
85	103				20	8.9-115		constant	98	98	98		2472	2676
170	101				10	18-229		variable	66	105	101		2473	2673
340	54				5	35-458		variable	38	68	59		2474	2674

Fixed Speed—AC Gearmotors



Type 42R-5N

Speed (rpm)	Rated Torque (lb-in.)	Motor HP	V	Hz	Ph	Amps	Gear Ratio	Radial Load (lbs.)	Capacitor (µF/VAC)	Product Type	Model Number
Permanent Split Capacitor, Non-synchronous									***CAPACITOR IS REQUIRED***		
38	113	1/6	115	60	1	2.1	40	180	15.0/350	42R5BFCI-5N	0678
75	81						20				0677
150	47						10				0672
300	25						5				0670
Split Phase (with centrifugal switch), Non-synchronous											
43	113	1/6	115	60	1	3.6	40	180	—	42R5BFSI-5N	0648
85	75						20		—		0647
170	43						10		—		0646
340	23						5		—		0645
Three-phase, Non-synchronous											
43	113	1/4	230	60	3	1.3	40	180	—	42R5BFPP-5N	0634
85	103						20		—		0633
170	67						10		—		0630
340	36						5		—		0629

Permanent Magnet DC Gearmotors



Type 42A-5N



Type 33A-5L/H Hollow Shaft

Speed (rpm)	Rated Torque (lb-in.)	Rated Current (Amps)		Peak Torque (lb-in.)	Motor HP	FF	Gear Ratio	Radial Load (lbs.)	Product Type[2]	Accy Shaft	No Accy Shaft	Accy Shaft	No Accy Shaft
		12/24V	90/130V							12/24V		90/130V	
42A-5N Gearmotor													
12/24V Models With Class F Temperature Rating													
25/62	109	17	—	177	3/16 / 7/16	1.0	40	120	42A5FEPM-5N	5838	5738	—	—
33/83	104		—	169			30			5837	5737	—	—
50/125	98		—	159			20			5836	5736	—	—
100/250	80		—	91			10			5835	5735	—	—
200/500	43		—	49			5			5834	5734	—	—
90/130V Models With Class F Temperature Rating													
45/62	109	—	1.9/1.8	177	3/16 / 1/4	1.4 / 1.0	40	120	42A5BEPM-5N	—	—	4538	4138
60/83	104	—		169			30			—	—	4537	4137
90/125	83	—		159			20			—	—	4536	4136
180/250	44	—		91			10			—	—	4535	4135
360/500	24	—		49			5			—	—	4534	4134
33A-5L/H Hollow Shaft Gearmotor													
90/130V Models With Class F Temperature Rating													
43 / 62	84 / 109	—	1.4 / 1.8	177	1/8 / 1/4	1.4 / 1.0	40	120	33A5BEPM-5L/H	—	—	—	6738
58 / 83	75 / 100	—		169			30			—	—	—	6737
86 / 125	54 / 78	—		159			20			—	—	—	6736
173 / 250	31 / 42	—		91			10			—	—	—	6735
345 / 500	17 / 22	—		49			5			—	—	—	6734

[1] SOA: Contact the factory for detailed speed/torque information (Safe Operating Area). See page 25; [2] The fifth character of the product type changes from "B" to "F" for accessory ready models; [3] Type FV INTEGRAmotors require a PWM signal from a motion controller or PLC to operate

5N/5L Right Angle Gearmotors | up to 121 lb-in., *continued*

SCR Rated—Permanent Magnet DC Gearmotors

see page 4 for details



Type 33A-5L/H / SCR Rated
90V and 180VDC gearmotors with a maximum rated armature speed of 2500 rpm.

Speed (rpm)	Rated Torque (lb-in.)	Rated Current (Amps)		Form Factor		Motor HP		Gear Ratio	Peak Torque (lb-in.)	Radial Load (lbs.)	Product Type	Model Number	
		90V	180V	90V	180V	90V	180V					90V	180V
33	101	1.6	0.8	1.4	1.4	1/7	1/7	75	190	120	33A5BEPM-5L/H	1526	1516
42	91							60	186		33A5BEPM-5L/H	1527	1517
63	74							40	177		33A5BEPM-5L/H	1525	1515
83	66							30	169		33A5BEPM-5L/H	1524	1514
125	51							20	159		33A5BEPM-5L/H	1523	1513
250	27							10	91		33A5BEPM-5L/H	1522	1512
500	14							5	49		33A5BEPM-5L/H	1521	1511

Brushless DC Gearmotors



Type 34B-5N

Speed (rpm)	Rated Torque (lb-in.)	Rated Current (Amps)		Peak Torque (lb-in.)	Motor HP	Gear Ratio	Radial Load (lbs.)	Product Type [2]	Accy Shaft	No Accy Shaft	Accy Shaft	No Accy Shaft
		24V	130V						24V		130V	
34B-5N Right Angle Gearmotor												
62	109	—	2.7	174	3/8	40	220	34B6BEBL-5N	—	—	—	3396
62	79	12	2.0	174	1/4	40	230	34B4BEBL-5N	3691	3591	3491	3391
62	74	9.6	1.5	174	1/5	40	230	34B3BEBL-5N	—	3586	—	3386
83	104	—	2.6	166	3/8	30	210	34B6BEBL-5N	—	—	—	3397
83	75	12	2.0	166	1/4	30	210	34B4BEBL-5N	3692	3592	3492	3392
83	70	9.6	1.6	166	1/5	30	210	34B3BEBL-5N	—	3587	—	3387
125	98	—	2.6	156	3/8	20	180	34B6BEBL-5N	—	—	—	3398
125	75	12	2.0	156	1/4	20	180	34B4BEBL-5N	3693	3593	3493	3393
125	59	9.6	1.5	156	1/5	20	180	34B3BEBL-5N	—	3588	—	3388
250	64	—	2.7	161	3/8	10	140	34B6BEBL-5N	—	—	—	3399
250	42	12	2.0	161	1/4	10	140	34B4BEBL-5N	3694	3594	3494	3394
250	33	9.6	1.6	140	1/5	10	150	34B3BEBL-5N	—	3589	—	3389
500	36	—	2.6	142	3/8	5	120	34B6BEBL-5N	—	—	—	3378
500	24	12	2.0	94	1/4	5	120	34B4BEBL-5N	3695	3595	3495	3395
500	18.6	9.6	1.6	74	1/5	5	120	34B3BEBL-5N	—	3590	—	3390

5F Right Angle Gearmotors | up to 121 lb-in.

- Unvented gearhousing
- Bronze worm gear for high shock load capability
- Hardened and ground worm gear
- Models with accessory shafts for mounting encoders or brakes
- Page 40 for capacitors and terminal boxes
- Page 46 for dimensions

Fixed Speed—AC Gearmotors



Type 34R-5F

Speed (rpm)	Rated Torque (lb-in.)	Motor HP	V	Hz	Ph	Amps	Gear Ratio	Radial Load (lbs.)	Capacitor (µF/VAC)	Product Type	Model Number
Permanent Split Capacitor, Non-synchronous									***CAPACITOR IS REQUIRED***		
19 / 23	121 / 102	1/9	115	50 / 60	1	1.8 / 1.4	75	80	12.5/250	34R6BFCI-5F	0524
23 / 28	111 / 93						60				0523
28 / 34	104 / 87						50				0522
35 / 43	93 / 78						40				0521
47 / 57	83 / 70						30				0519
70 / 85	60 / 50						20				0518
93 / 113	49 / 41						15				0514
140 / 170	35 / 29						10				0513
280 / 340	19 / 16						5				0511

Permanent Magnet DC Gearmotors



Type 33A-5F

Speed (rpm)	Rated Torque (lb-in.)	Rated Current (Amps)		Peak Torque (lb-in.)	Motor HP	FF	Gear Ratio	Radial Load (lbs.)	Product Type [2]	Accy Shaft	No Accy Shaft	Accy Shaft	No Accy Shaft
		24V	130V							24V		130V	
62	55	5.3	0.91	118	1/8	1.0	40	80	33A5BEPM-5F	6824	6124	6544	6144
125	38			83			20			6825	6115	6542	6142
250	21			44			10			6822	6122	6541	6141
500	11			23			5			6820	6121	6540	6140

These models feature sleeve bearings on the driveshaft.

[1] SOA: Contact the factory for detailed speed/torque information (Safe Operating Area). See page 25; [2] The fifth character of the product type changes from "B" to "F" for accessory ready models;

3RD Right Angle Gearmotors | up to 148 lb-in.

- Unvented gearhousing for universal horizontal mounting
- Hardened worm gears
- Face-mount on the drive-shaft side, or bottom-mount is standard
- *42A-5H only:* Single and double shaft configurations available
- See page 40 for capacitors and terminal boxes
- See page 47 for reference dimensions

Variable Speed—Inverter-Duty AC Gearmotors



Type 30R-3RD Inverter-Duty

Fixed Speed Rating					Variable Speed (SOA) Ratings[1]						Product Type	230V Model Number
Speed (rpm)	Torque (lb-in.)	Motor HP	A	Gear Ratio	Speed Range (rpm)	Frequency Range (Hz)	Torque Type	Torque @ 10 Hz (lb-in.)	Torque @ 60 Hz (lb-in.)	Torque @ 90 Hz (lb-in.)		
0.5	95	1/25	0.38	3600	0.1-0.6	10-90	Constant	95	95	95	30R2BEPP-3RD	8036
1.2	126	1/25	0.38	1400	0.2-1.5			121	121	121	30R2BEPP-3RD	8014
2.8	148	1/17	0.48	600	02-3.6			148	148	148	30R4BEPP-3RD	8006
5.7	146	1/17	0.48	300	0.4-7.2			146	146	146	30R4BEPP-3RD	8003
8.5	141	1/17	0.48	200	0.7-0.11			141	141	141	30R4BEPP-3RD	8002

Fixed Speed—AC Gearmotors



Type 30R-3RD

Speed (rpm)	Rated Torque (lb-in.)	Motor HP	V	Hz	Ph	Amps	Gear Ratio	Radial Load (lbs.)	Capacitor (µF/VAC)	Product Type	Model Number
Permanent Split Capacitor, Non-synchronous										***CAPACITOR IS REQUIRED***	
0.4	95	1/30	115	60	1	0.5	3600	160	5.0/250	30R2BECI-3RD	8536
1.1	126	1/30				0.5	1400		5.0/250	30R2BECI-3RD	8514
2.6	148	1/27				0.49	600		9.0/250	30R4BECI-3RD	8506
5.2	101	1/27				0.49	300		9.0/250	30R4BECI-3RD	8503
7.8	88	1/27				0.49	200		9.0/250	30R4BECI-3RD	8502

Permanent Magnet DC Gearmotors



Type 24A-3RD

Speed (rpm)	Rated Torque (lb-in.)	24V Rated Current (A)	130V Rated Current (A)	Motor HP	FF	Gear Ratio	Radial Load (lbs.)	Product Type[2]	24V Model Number	130V Model Number
0.7	95	1.8	—	1/25	1.0	3600	160	24A2BEPM-3RD	4336	—
0.7	95	—	0.3	1/29		3600		24A2BEPM-3RD	—	4036
1.8	126	1.8	—	1/25		1400		24A2BEPM-3RD	4314	—
1.8	126	—	0.3	1/29		1400		24A2BEPM-3RD	—	4014
4.2	147	2.6	0.48	1/17		600		24A4BEPM-3RD	4306	4006
8.3	108	2.6	0.48	1/17		300		24A4BEPM-3RD	4303	4003
12.5	92	2.6	0.48	1/17		200		24A4BEPM-3RD	4302	4002

Brushless DC Gearmotors



Type 22B-3RD

Speed (rpm)	Rated Torque (lb-in.)	24V Rated Current	130V Rated Current	Motor HP	Gear Ratio	Radial Load (lbs.)	Product Type[2]	24V Model Number	130V Model Number
0.7	95	2.8	0.48	1/16	3600	160	22B2BEBL-3RD	5336	5036
1.8	126	2.8	0.48	1/16	1400		22B2BEBL-3RD	5314	5014
4.2	147	2.8	0.48	1/16	600		22B2BEBL-3RD	5306	5006
8.3	144	5.9	0.89	1/8	300		22B4BEBL-3RD	5303	5003
12.5	140	5.9	0.89	1/8	200		22B4BEBL-3RD	5302	5002

5H Right Angle Gearmotors | up to 296 lb-in.

Variable Speed—Inverter-Duty AC Gearmotors



Type 48R-5H Inverter-Duty

Fixed Speed Rating					Variable Speed (SOA) Ratings[1]						Product Type	230/460V Model Number
Speed (rpm)	Torque (lb-in.)	Motor HP	(230/460V) Amps	Gear Ratio	Speed Range (rpm)	Frequency Range (Hz)	Torque Type	Torque @ 10 Hz (lb-in.)	Torque @ 60 Hz (lb-in.)	Torque @ 90 Hz (b-in.)		
Three-Phase, Inverter-Duty, Non-synchronous (TEFC)												
35	296	3/4	2.7/1.3	48	3.3-48	10-90	constant	272	272	272	48R6BFPP-5H	2280
47	285			36	4.4-63		constant	262	262	262		2281
94	256			18	8.9-127		constant	234	234	234		2282
170	178			10	16-228		variable	152	210	180		2283

Permanent Magnet DC Gearmotors



Type 42A-5H

Speed (rpm)	Rated Torque (lb-in.)	Rated Current (Amps)		Peak Torque (lb-in.)	Motor HP	FF	Gear Ratio	Radial Load (lbs.)	Product Type[2]	Accy Shaft	No Accy Shaft	Accy Shaft	No Accy Shaft
		24V	130V							24V		130V	
Single Shaft Gearmotor, Class B													
52	189	12	2.3	340	1/3	1.0	48	150	42A7BEPM-5H	4829	4729	4599	4199
69	151			316			36			4828	4728	4598	4198
139	87			186			18			4827	4727	4596	4196
250	52			104			10			4826	4726	4594	4194
Double Shaft Gearmotor, Class F													
52	264	15	3.3	340	1/2	1.0	48	150*	42A7BEPM-5H	4833	4733	4503	4103
69	218			340			36	150*		4832	4732	4502	4102
139	129			286			18	150*		4831	4731	4501	4101
250	71			158			10	150*		4830	4730	4500	4100

*only on one of the two shafts

- Unvented gearhousing for universal horizontal mounting
- Hardened helical output gearing
- Bronze worm gear for high shock load capability
- Hardened and ground worm hobbed on the motor shaft for high strength and long life
- Models with accessory shafts are ideal for mounting encoders or brakes
- See page 40 for capacitors and terminal boxes
- See pages 47 and 48 for reference dimensions

Variable Speed—Inverter-Duty AC Gearmotors





Type 42R-GB and 42R-GB/H Hollow Shaft (Inverter-Duty)

Fixed Speed Rating						Variable Speed (SOA) Ratings[1]						Product Type	230V Model No.	230/460V Model No.
Speed (rpm)	Torque (lb-in.)	HP	(230V) A	(230/460V) A	Gear Ratio	Speed Range (rpm)	Frequency Range (Hz)	Torque Type	Torque @ 10 Hz (lb-in.)	Torque @ 60 Hz (lb-in.)	Torque @ 90 Hz (lb-in.)			
Three-Phase, Inverter-Duty, Non-synchronous (TEFC)														
6	380	3/8	1.9	—	280	0.6-8.2	10-90	constant	380	380	380	42R6BFPP-GB	2236	—
14	290				120	1.5-19			290	290	290		2237	—
28	230				60	3.0-38			230	230	230		2238	—
Hollow Shaft														
6	380	3/8	1.9	1.90/0.95	280	0.6-8.2	10-90	constant	380	380	380	42R6BFPP-GB/H	2336	2636
14	290				120	1.5-19			290	290	290		2337	2637
28	230				60	3.0-38			230	230	230		2338	2639

Fixed Speed—AC Gearmotors





Type 42R-GB and 42R-GB/H Hollow Shaft

Speed (rpm)	Rated Torque (lb-in.)	Motor HP	V	Hz	Ph	Amps	Gear Ratio	Radial Load (lbs.)	Capacitor (µF/VAC)	Product Type	Model Number
Permanent Split Capacitor, Non-synchronous											***CAPACITOR IS REQUIRED***
5.9	380	1/6	115	60	1	2.0	280	200	25.0/370	42R5BFCI-GB	5266
8.9	375						190				5264
14	290						120				5262
21	278						80				5261
28	209						60				5260
Three-phase, Non-synchronous											
5.9	380	1/4	230/460	60	3	1.2/0.6	280	200	—	42R5BFPP-GB	5276
8.9	375						190				5274
14	290						120				5272
21	307						80				5271
28	230						60				5270
Permanent Split Capacitor, Non-synchronous Hollow Shaft											***CAPACITOR IS REQUIRED***
5.9	380	1/6	115	60	1	2.0	280	200	25.0/370	42R5BFCI-GB/H	8266
8.9	375						190				8264
14	290						120				8262

Permanent Magnet DC Gearmotors



Type 33A-GB



Type 33A-GB/H Hollow Shaft



Type 42A-GB

Speed (rpm)	Rated Torque (lb-in.)	Rated Current (Amps)		Peak Torque (lb-in.)	Motor HP	FF	Gear Ratio	Radial Load (lbs.)	Product Type[2]	Accy Shaft	No Accy Shaft	Accy Shaft	No Accy Shaft
		24V	90/130V							24V		90/130V	
33A-GB 90/130V Models With Class F Temperature Rating													
6.2 / 8.9	380 / 380	—	1.4 / 1.8	600	1/8 / 1/4	1.4 / 1.0	280	200	33A5BEPM-GB	—	—	—	6066
9.1 / 13	358 / 375			600			190						6064
14 / 21	251 / 290			464			120						6062
29 / 42	151 / 200			368			60						6060
90/130V Hollow Shaft													
6.2 / 8.9	380 / 380	—	1.4 / 1.8	600	1/8 / 1/4	1.4 / 1.0	280	200	33A5BEPM-GB/H	—	—	—	7066
9.1 / 13	358 / 375			600			190						7064
14 / 21	251 / 290			464			120						7062
29 / 42	151 / 200			368			60						7060
42A-GB 130 V Models With Class B Temperature Rating										**24V**		**130V Only**	
8.9	380	8.8	1.8	600	1/4	1.0	280	200	42A5BEPM-GB	4866	4766	4466	4066
13	375			600			190			4864	4764	4464	4064
21	290			464			120			4862	4762	4462	4062
42	213			368			60			4860	4760	4460	4060

[1] SOA: Contact the factory for detailed speed/torque information (Safe Operating Area). See page 25; [2] The fifth character of the product type changes from "B" to "F" for accessory ready models

Save Time, Space and Money with Hollow Shaft Gearmotors

Hollow shaft gearmotors connect directly to the driven load, reducing the overall space required by the gearmotor and eliminating expensive shaft couplings, mounting hardware, chains and sprockets. Hollow shaft flange mounting can also eliminate the need for a support bearing on one side of a conveyor roller.

25H2/30H3 Right Angle Hypoid Gearmotors | up to 1,535 lb-in.

- Unvented gearhousing for universal horizontal mounting
- Hardened steel gears for long life and maximum performance
- More energy-efficient than similar worm-gear models
- Two gearhead sizes: 25H2 (5:1 to 60:1) with 1-inch hollow shaft, and 30H3 (80:1 to 240:1) with 1.25-inch hollow shaft bore size
- Encoder compatible with new screw-in encoder shaft kit option, model 0964
- Drop-in alternative for many Bison, Brother and Oriental Hypoid gearmotors
- See page 48 for reference dimensions
- See Page 40 for accessories

Permanent Magnet DC Hypoid Gearmotors

New



Type 33A7-30H3



Type 33A7-25H2

Speed (rpm)	Rated Torque (lb-in.)	Rated Current (Amps)	Peak Torque (lb-in.)	Motor HP	Form Factor	Gear Ratio	Radial Load (lbs.)	Product Type	Model Number
130 VDC, Totally Enclosed, Non-ventilated, Class F Insulation									
10	1535	2.3	3212	1/3	1.0	240	708	33A7FEPM-30H3	3011
13	1280		2676			200	708	33A7FEPM-30H3	3010
16	1025		2141			160	708	33A7FEPM-30H3	3009
21	770		1606			120	708	33A7FEPM-30H3	3008
31	510		1071			80	696	33A7FEPM-30H3	3007
42	390		813			60	575	33A7FEPM-25H2	3006
63	260		542			40	518	33A7FEPM-25H2	3005
83	210		440			30	475	33A7FEPM-25H2	3004
125	140		293			20	419	33A7FEPM-25H2	3003
167	105		220			15	388	33A7FEPM-25H2	3002
250	70		147			10	342	33A7FEPM-25H2	3001
500	35		73			5	277	33A7FEPM-25H2	3000

Speed (rpm)	Rated Torque (lb-in.)		Rated Current (Amps)		Peak Torque (lb-in.)		Motor HP		Form Factor	Gear Ratio	Radial Load (lbs.)	Product Type	Model Number	
	12V	24V	12V	24V	12V	24V	12V	24V					12V	24V
12 or 24 VDC, Totally Enclosed, Non-ventilated, Class F Insulation														
10	865	1535	17	14	1872	3212	1/5	1/3	1.0	240	708	33A7FEPM-30H3	3060	3047
13	720	1280			1560	2676				200	708	33A7FEPM-30H3	3059	3046
16	580	1025			1248	2141				160	708	33A7FEPM-30H3	3058	3045
21	435	770			936	1606				120	708	33A7FEPM-30H3	3057	3044
31	290	510			624	1071				80	696	33A7FEPM-30H3	3056	3043
42	220	390			474	813				60	575	33A7FEPM-25H2	3054	3042
63	145	260			316	542				40	518	33A7FEPM-25H2	3053	3041
83	120	210			257	440				30	475	33A7FEPM-25H2	3052	3040
125	80	140			171	293				20	419	33A7FEPM-25H2	3051	3039
167	60	105			128	220				15	388	33A7FEPM-25H2	3050	3038
250	40	70			86	147				10	342	33A7FEPM-25H2	3049	3037
500	20	35			43	73				5	277	33A7FEPM-25H2	3048	3036

SCR Rated - Permanent Magnet DC Hypoid Gearmotors

see page 4 for details

New



Type 33A7-30H3



Type 33A7-25H2

Speed (rpm)	Rated Torque (lb-in.)		Rated Current (Amps)		Form Factor		Motor HP		Gear Ratio	Peak Torque (lb-in.)		Radial Load (lbs.)	Product Type	Model Number	
	90V	180V	90V	180V	90V	180V	90V	180V		90V	180V			90V	180V
10	1120	865	2.3	1.1	1.4	1.5	1/4	1/5	240	2374	1872	708	33A7FEPM-30H3	3023	3035
13	935	720							200	1979	1560	708	33A7FEPM-30H3	3022	3034
16	750	580							160	1583	1248	708	33A7FEPM-30H3	3021	3033
21	560	435							120	1187	936	708	33A7FEPM-30H3	3020	3032
31	375	290							80	791	624	696	33A7FEPM-30H3	3019	3031
42	285	220							60	601	474	575	33A7FEPM-25H2	3018	3030
63	190	145							40	401	316	518	33A7FEPM-25H2	3017	3029
83	155	120							30	325	257	475	33A7FEPM-25H2	3016	3028
125	100	80							20	217	171	419	33A7FEPM-25H2	3015	3027
167	75	60							15	163	128	388	33A7FEPM-25H2	3014	3026
250	50	40							10	108	86	342	33A7FEPM-25H2	3013	3025
500	25	20							5	54	43	277	33A7FEPM-25H2	3012	3024

90V and 180VDC gearmotors with a maximum rated armature speed of 2500 rpm.

Ratings are based on operation from DC power. Performance may vary with a speed control.
Visit our website for lead-time and availability information.

High-Efficiency Hypoid PMDC Gearmotors



RATED SPEED	TORQUE	GEAR RATIO	VOLTAGES
10 to 500 rpm	20 to 1,535 lb-in	5:1 to 240:1	90, 130, 180, 12 & 24 VDC

Get high efficiency, high torque and smooth operation with Bodine permanent magnet DC, hypoid right-angle gearmotors. Their compact and versatile hollow shaft design is ideal for mobile, battery-powered, and low-voltage medical applications. Encoder mounting options.

Visit bodine-electric.com for detailed specifications and CAD files.

Motors without Gearing

Bodine offers a full range of fractional horsepower motors. **AC fixed and variable speed motors** are available with voltage ratings of 115 VAC, 60 Hz (single-phase), 230 VAC, 60 Hz (3-phase) and 230/460 VAC, 60 Hz (3-phase). They are offered with three winding types: permanent split capacitor, split phase, and three-phase. **PMDC motors** are available with voltage ratings from 12 to 180 VDC. **Brushless DC motors** are available with voltage ratings of 24 or 130 VDC.



AC Torque Motors | from 3.5 to 68 oz.in.

- Will operate satisfactorily on 50 or 60 Hz
- Totally enclosed non-ventilated IP-20 rating
- Provides excellent performance for holding, winding and tensioning applications
- Provides locked rotor or reverse torque intermittently at rated voltage, or continuously at reduced voltage
- Permanently lubricated, noise tested ball bearings
- Locked bearing design on 30R, 42R, and 48R minimizes shaft endplay
- See page 40 for capacitors and accessories
- See page 49 for reference dimensions

AC Torque Motors (for holding applications)



Type KCI



Type 30R



Type 42R



Type 48R

V	Hz	Locked Rotor Performance				rpm @ No Load	Capacitor (µF/VAC)	Product Type	Model Number
		% Duty Cycle	Torque (oz-in.)	Watts	Max. On Time (min.)				
KCI							*CAPACITOR IS INCLUDED*		
115	60	40	7.0	22	5	1580	2.3/250	KCI-26	0621
83	60	100	3.5	12	—	1570			
115	50	40	6.0	19	5	1310			
92	50	100	4.0	13	—	1300			
30R							*CAPACITOR IS REQUIRED*		
115	60	50	25	52	30	1660	5.0/250	30R2FECI	5625
100	60	100	19	40	—	1645			
115	50	50	25	47	30	1425			
100	50	100	19	36	—	1420			
42R							*CAPACITOR IS REQUIRED*		
115	60	40	38	85	28	1690	7.5/370	42R6FECI	2628
87	60	100	22	49	—	1680			
115	50	40	38	82	28	1445			
87	50	100	22	47	—	1435			
48R NEMA-56C Face Mount, Or Base Mount							*CAPACITOR IS REQUIRED*		
115	60	40	65	120	15	1560	12.5/370	48R6FECI	0632
80	60	100	32	60	—	1560			
115	50	40	68	96	15	1370			
80	50	100	34	58	—	1360			

Typical Performance Curves at 115V, 60 Hz

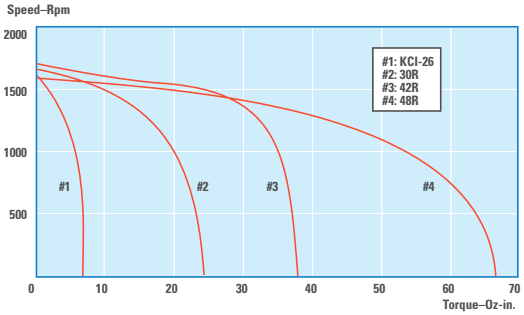

- Quintsulation™, 5-stage insulation system designed to meet NEMA MG 1-1993, Section IV, Part 31
- Most standard models are available with either 230VAC, 60Hz, 3-phase or 230/460V, 60Hz 3-phase
- Inverter-grade magnet wire and Class F insulation system for increased protection against spikes and corona damage caused by the inverter
- UL recognized for construction, CSA certified, and in compliance with the Low Voltage Directive "CE"
- Page 40: capacitors and terminal boxes
- Pages 49 for reference dimensions

Hazardous Location AC Gearmotors



Type 34R Inverter-Duty

Fixed Speed Ratings					Variable Speed (SOA) Ratings [1]						Product Type	230VAC Model Number	460VAC Model Number
Speed (rpm)	Torque (oz-in.)	HP	(230V) Amps	(460V) Amps	Speed Range (rpm)	Frequency Range (Hz)	Torque Type	Torque @ 10 Hz (oz-in.)	Torque @ 60 Hz (oz-in.)	Torque @ 140 Hz (oz-in.)			
Type 34R Variable Speed Inverter-Duty AC— 1/6 HP													
Three-Phase, Inverter-Duty Motor, IP-66, TENV (Groups C and D; Temperature Codes T3C and T4A) **Explosion-Proof CI/D1**													
1600	158	1/4	.98	0.49	214-3259	10-120	vari-able	114	158	55	34R6BXPP	3263	3264

115VAC and 230VAC, PSC Models also available, 42 Watts, 33 oz-in, TENV

Variable Speed Inverter-Duty AC



Type 30R Inverter-Duty



Type 34R Inverter-Duty



Type 42R Inverter-Duty



Type 48R Inverter-Duty

Fixed Speed Ratings					Variable Speed (SOA) Ratings [1]						Product Type	230V Model Number	460V Model Number	230/460V Model Number
Speed (rpm)	Torque (oz-in.)	HP	(230V) Amps	(230/460V) Amps	Speed Range (rpm)	Frequency Range (Hz)	Torque Type	Torque @ 10 Hz (oz-in.)	Torque @ 60 Hz (oz-in.)	Torque @ 140 Hz (oz-in.)				
Type 30R Variable Speed Inverter-Duty AC— 1/25-1/17 HP														
1700	24	1/25	—	0.38	220-3150	10-140	variable	20	56	27	30R2BEPP	2200	—	—
	24	1/25	—	0.19	215-3230			24	56	23	30R2BEPP	—	2600	—
	35	1/17	—	0.48	133-3240			45	66	35	30R4BEPP	2201	—	—
Type 34R Variable Speed Inverter-Duty AC — 1/8-1/4 HP														
Three-Phase, Inverter-Duty, Non-synchronous Motor (TEFC)														
1700	155	1/6	1.0	1.0/0.50	120-2960	10-120	variable	80	155	95	34R4BFPP	—	—	2898
	148	1/4	1.2	1.2/0.60	220-3650	10-140		120	247	90	34R6BFPP	2295	—	2895
Three-Phase, Inverter-Duty, Synchronous Motor (TEFC)														
1800	70	1/8	1.4	—	300-2400	10-80	variable	54	103	48	34R6BFYP	2299	—	—
Type 42R Variable Speed Inverter-Duty AC — 3/8 HP														
Three-Phase, Inverter-Duty, Non-synchronous Motor (TEFC), Base Mount														
1700	222	3/8	1.9	1.9/.95	177-3500	10-140	variable	170	281	137	42R6BFPP	2235	—	2835
Three-Phase, Inverter-Duty, Non-synchronous Motor (TEFC), NEMA C Face Mount														
1700	222	3/8	1.9	1.9/.95	177-3500	10-140	variable	170	281	137	42R6BFPP	2234	—	2834
Type 48R Variable Speed Inverter-Duty AC — 1/3-3/4 HP														
Three-Phase, Inverter-Duty, Non-synchronous Motor (TEFC), NEMA-56C Face Mount or Base Mount														
1700	445	3/4	—	2.7/1.3	160-3600	10-140	variable	412	675	220	48R6BFPP	—	—	2240
Three-Phase, Inverter-Duty, Synchronous Motor (TEFC), NEMA-56C Face Mount or Base Mount														
1800	185	1/3	—	2.4/1.2	300-2400	10-80	variable	220	262	125	48R5BFYP	—	—	2244

[1] SOA: Contact the factory for detailed speed/torque information (Safe Operating Area). See below.

Safe Operating Torque and Speed Area (SOA)

Rated Torque is either the value of torque which corresponds to nameplate output power and speed at 60 Hz, or it is the maximum torque at gear strength limits (rated torque can be either motor limited or gear-limited).

SOA Torque is defined as the maximum torque at which the motor still operates within Class F thermal limits, or as the maximum torque of a gearmotor when it is gear-limited. Continuous duty operation must be limited to the area below the SOA or gear-limited torque curves. The SOA torque for synchronous motors is close to the pull-in torque; that is, the motor will pull out of synchronism if the required torque exceeds the SOA torque.

Examples of typical "SOA" Graphs. Contact our technical support staff for specific SOA information.

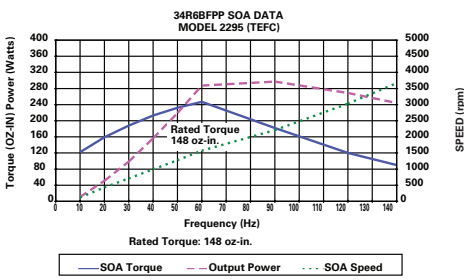

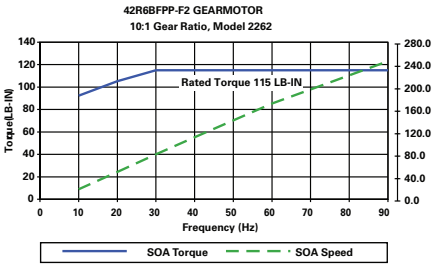

- Totally enclosed IP-20 rating
- Fan cooled for high output power
- Class B insulation system operated within Class A limits to prolong winding and lubricant life
- Locked bearing design minimizes shaft endplay
- Locked bearing design on 30R, 34R, 42R, and 48R minimizes shaft endplay
- See Page 40 for capacitors and accessories
- See pages 49 for reference dimensions

Fixed Speed AC—Type K-2 1/1600-1/200 HP



Type K-2

Speed (rpm)	Rated Torque (oz-in.)	HP	V	Hz	Ph	Amps	Radial Load (lbs.)	Capacitor (µF/VAC)	Product Type	Model Number
Permanent Split Capacitor, Non-synchronous									***CAPACITOR IS INCLUDED***	
1550	1.4	1/450	115	60	1	0.08	5.7	1.0/250	KCI-23	0705
1550	2.2	1/300	115	60	1	0.104	5.7	1.3/250	KCI-24	0712
1550	3.2	1/200	115	60	1	0.124	5.7	1.6/250	KCI-26	0713
Permanent Split Capacitor, High Slip, Non-synchronous									***CAPACITOR IS INCLUDED***	
1200	1.1	1/800	115	60	1	0.082	5.7	1.0/250	KCI-23	0707
	1.8	1/450				0.098		1.2/250	KCI-24	0714
Permanent Split Capacitor, Synchronous									***CAPACITOR IS INCLUDED***	
1800	0.35	1/1600	115	60	1	0.077	5.7	1.0/250	KYC-23	0701
1800	0.62	1/900				0.091		1.3/250	KYC-24	0709
3600	0.31	1/900				0.102		1.6/250	KYC-24	0710

Fixed Speed AC—Type 30R 1/40-1/30 HP



Type 30R

Speed (rpm)	Rated Torque (oz-in.)	HP	V	Hz	Ph	Amps	Radial Load (lbs.)	Capacitor (µF/VAC)	Product Type	Model Number
Permanent Split Capacitor, Non-synchronous									***CAPACITOR IS REQUIRED***	
1700	20	1/30	115	60	1	0.45	18	5.0/250	30R2BECI	5240
3400	10					0.47				5219
Permanent Split Capacitor, High Slip, Synchronous									***CAPACITOR IS REQUIRED***	
1800	14	1/40	115	60	1	0.52	18	5.0/250	30R2BEYC	5246

Fixed Speed AC—Type 34R 1/15-1/5 HP



Type 34R

Speed (rpm)	Rated Torque (oz-in.)	HP	V	Hz	Ph	Amps	Radial Load (lbs.)	Capacitor (µF/VAC)	Product Type	Model Number
Permanent Split Capacitor, Three-Wire Reversible, Non-Synchronous									***CAPACITOR IS REQUIRED***	
1700	85	1/7	115	60	1	1.7	50	27.5/250	34R6BFCI	0294
1400/1700	90/74	1/8	230	50/60		0.8/0.7		6.0/450		0296
Permanent Split Capacitor, Non-synchronous									***CAPACITOR IS REQUIRED***	
1700	39	1/15	115	60	1	1	50	10.0/250	34R4BFCI	0290
1700	65	1/9				1.4		12.5/250	34R6BFCI	0291
3400	42	1/7				1.75		15.0/250	34R6BFCI	0293
Permanent Split Capacitor, Synchronous									***CAPACITOR IS REQUIRED***	
1800	38	1/15	115	60	1	1.5	50	15.0/250	34R6BFYC	0297
Three-phase, Non-synchronous										
1700	119	1/5	230	60	3	1.2	50	—	34R6BFPP	0295
Three-phase, Synchronous										
1800	70	1/8	230	60	3	1.4	50	—	34R6BFYP	0299

Common Abbreviations

BLDC	Brushless DC
FF	Form Factor—A measurement which indicates to what degree rectified current departs from pure DC. A higher form factor increases the heating effect of the motor and reduces brush life.[1]
IP-44	Ingress Protection Rating—Protection against sprays from all directions—limited ingress permitted.[2]
IP-66	Ingress Protection Rating—enclosure is rated to be "dust tight" and protected against powerful jets of water and heavy seas.
NEMA-12	Enclosures (without knockouts) for indoor use. Provides a degree of protection to personnel against access to hazardous parts and to the equipment inside against ingress of solid objects, and lightly splashed liquids.[3]
NEMA-4	Enclosures constructed for either indoor or outdoor use. Protects personnel against access to hazardous parts. Protects equipment inside the enclosure against ingress of solid objects and rain, sleet, snow, splashing water, and hose-directed water.[3]
PMDC	Permanent magnet DC
TEFC	Totally enclosed, fan cooled
TENV	Totally enclosed, non-ventilated

1. Bodine Handbook, fifth edition. Chicago, 1993; 2. American National Standards Institute ANSI/IEC 60529-2004; 3. NEMA.org, NEMA 250-2003

Fixed Speed AC—Type 42R 1/12-1/4 HP



Type 42R (Base Mount)



Type 42R (NEMA C Face)

Speed (rpm)	Rated Torque (oz-in.)	HP	V	Hz	Ph	Amps	Radial Load (lbs.)	Capacitor (µF/VAC)	Product Type	Model with NEMA-C Face and Base Mount [1]	Model with NEMA-C Face Mount	Model with Base Mount
Permanent Split Capacitor, Three-Wire Reversible, Non-Synchronous										CAPACITOR IS REQUIRED		
1700	148	1/4	115	60	1	2.9	50	45.0/250 [2]	42R6BFCI	0267	—	—
1400/1700	144/119	1/5	230	50/60		1.1 / 1.2		10.0/450		0268	—	—
Permanent Split Capacitor, Non-synchronous										CAPACITOR IS REQUIRED		
1700	101	1/6	115	60	1	1.9	50	15.0/350	42R5BFCI	—	0260	0258
Split phase (with centrifugal switch), Non-synchronous												
1700	48	1/12	115	60	1	2.4	50	—	42R3BFSI	—	0261	0251
1700	101	1/6				3.6			42R5BFSI	—	0254	0253
3450	50	1/6				3.3			42R5BFSI	—	0265	0255
Three-phase, Non-synchronous												
1700	148	1/4	230	60	3	1.2	50	—	42R5BFPP	—	0263	0273
			230/460			1.2/0.6				—	0264	0274

Fixed Speed AC—Type 48R 1/3-1/2 HP



Type 48R (NEMA-56C Face, and/or Base Mount)

Speed (rpm)	Rated Torque (oz-in.)	HP	V	Hz	Ph	Amps	Radial Load (lbs.)	Capacitor (µF/VAC)	Product Type	Model Number
Permanent Split Capacitor, Non-synchronous									CAPACITOR IS REQUIRED	
1700	196	1/3	115	60	1	4.0/2.0	205	20.0/350	48R6BFCI	0283
			230					12.5/350		
Split Phase, Non-Synchronous (With Centrifugal Switch)										
1700	196	1/3	115/230	60	1	4.8/2.4	205	—	48R6BFSI	0284
Three-phase, Non-Synchronous										
1400	296	1/2	230	50	3	2.0	205	—	48R6BFPP	0286
1700			230	60		1.7				
1400			460	50		1.0				
1700			460	60		0.85				
Three-phase, Synchronous										
1800	185	1/3	230/460	60	3	2.5/1.3	205	—	48R5BFYP	0281

[1] See online CAD files for image of 42R motor with NEMA C-Face and base installed.
[2] Run capacitor 45µF/250 VAC for 60Hz operation (p/n 49401145). Use 40µF/250 VAC capacitor (p/n 49401147) for 50 Hz operation (motor derated to 1/6 HP at 50 Hz).

Comparative Advantages of AC Motors and Gearmotors

This table illustrates some of the capabilities, advantages, and disadvantages of common AC motor and gearmotor designs.

Motor Winding	Speed Tolerance	Typical Rated Speeds at 60Hz	Start/Stop Frequency	Coast without Brake	Coast with Dynamic Braking	Starting Torque (% of Rated Torque)	Pros	Cons
Split Phase (SI)	±3%	1700-1750 (4-pole) 3450 (2-pole)	Up to 6/hour	20-600 rev.	0.5-6 rev.	175% and up	No capacitors	Switch life 50k to 250k starts
Permanent Split Capacitor (CI)	±3%	1700-1750 (4-pole) 3450 (2-pole)	Up to 10/min.	20-600 rev.	0.5-6 rev.	90-100%	Very reliable, Low starting current	Low starting torque
Three Phase (PP, Non-synchronous)	±3%	1700-1750 (4-pole) 3450 (2-pole)	Up to 10/min.	20-600 rev.	0.5-6 rev.	200-400%	Most reliable and efficient, No cap/switch	Requires three-phase power supply

Variable Speed Drive Systems

	Requires Brushes	High Torque at Speeds Above and Below Rated	Noise Level	Performance	Speed Range
Variable Speed AC	No	No	Higher	Limited	Limited
PMDC System	Yes	Yes	Highest	Good	Widest
BLDC System	No	Yes	Lowest	Best	Widest

- Totally Enclosed, Non-Ventilated (IP40)
- Class F insulation, Class B rating
- Skewed armature for smooth low speed operation
- High starting torque and self-braking
- Oversized magnets resist demagnetization, stabilized to common strength for consistent performance
- Locked bearing minimizes endplay
- Models with accessory shafts are ideal for mounting encoders or brakes
- See page 40 for accessories
- See pages 49 for reference dimensions

PMDC Type 24A | 1/50-1/7 HP



Type 24A

Speed (rpm)	Rated Torque (oz-in.)	Current (Amps)	HP	FF	K_T (oz-in/A)	K_E (V/krpm)	Wdg. Res. (Ohms)	Winding Ind. (mH)	Inertia (oz-in-sec.^{2})	Radial Load (lbs.)	Product Type [3]	24V Winding: Accy Shaft	24V Winding: No Accy Shaft	130V Winding: Base [1] No Accy Shaft	130V Winding: Flange Accy Shaft	130V Winding: Flange No Accy Shaft
2500	8	1.2	1/50	1.0	8.3	6.1	5.7	6.7	0.003	25	24A0BEPM	4440	0040	—	—	—
2500	8	0.22	1/50		42	31	176	220	0.003		24A0BEPM	—	—	—	4439	0039
2500	16	1.8	1/29		10	7.5	2.5	3.6	0.005		24A2BEPM	4445	0045	—	—	—
2500	14	0.3	1/29		55	41	84	133	0.005		24A2BEPM	—	—	0042	4441	0041
2500	22	2.6	1/17		9.2	6.8	2	6.7	0.007		24A4BEPM	4444	0044	—	—	—
2500	24	0.48	1/17		55	40	5	84	0.007		24A4BEPM	—	—	—	0047	0043
11,500	12	1.1	1/7		14	10	3.15	4.5	0.007		24A4BEPM	—	—	0049 [2]	—	—

1 Models 0042 and 0049 ship with a factory installed base mounting kit.
2 Model 0049 rated V is 115VDC.

PMDC Type 33A | 1/16-1/3 HP



Type 33A

Speed (rpm)	Rated Torque (oz-in.)	Current (Amps)	HP	FF	K_T (oz-in/A)	K_E (V/krpm)	Winding Res. (Ohms)	Winding Ind. (mH)	Inertia (oz-in-sec.^{2})	Radial Load (lbs.)	Product Type [3]	24V Winding: Accy Shaft	24V Winding: No Accy Shaft	130V Winding: Accy Shaft	130V Winding: No Accy Shaft
24V, Class F Temperature Rating															
2500	50	5.5	1/8	1.0	10.2	7.5	0.66	1.9	0.031	55	33A3BEPM	6424	6024	—	—
	95	9.2	1/4		11.1	8.2	0.29	0.98	0.043		33A5BEPM	—	6021	—	—
	134	12	1/3		11.5	8.5	0.31	0.59	0.075		33A7BEPM	6422	6022	—	—
90/130 V Class F Temperature Rating															
1725 / 2500	36/50	.78 / 1.0	1/16 / 1/8	1.4 / 1.0	56	42	22	0.57	0.031	55	33A3BEPM	—	—	6434	6034
	73/95	1.4 / 1.8	1/8 / 1/4		60	44	11	0.28	0.043		33A5BEPM	—	—	6435	6035
	97/134	1.8 / 2.4	1/6 / 1/3		66	49	8.8	0.18	0.075		33A7BEPM	—	—	—	6037
130V, Class B Temperature Rating															
2500	34	.71	1/12	1.0	54	40	23	67	0.031	55	33A3BEPM	—	—	—	6016
	50	.91	1/8		57	42	13	41	0.043		33A5BEPM	—	—	—	6020

PMDC Type 42A | 1/4-1/2 HP



Type 42A

Speed (rpm)	Rated Torque (oz-in.)	Current (Amps)	HP	FF	K_T (oz-in/A)	K_E (V/krpm)	Winding Res. (Ohms)	Winding Ind. (mH)	Inertia (oz-in-sec.^{2})	Radial Load (lbs.)	Product Type [3]	24V Winding: Accy Shaft	24V Winding: No Accy Shaft	130V Winding: Accy Shaft	130V Winding: No Accy Shaft
NEMA 42C Face Mount, Class B Temperature Rating															
2500	101	8.8	1/4	1.0	12	9.2	0.27	0.64	0.082	90	42A5BEPM	4421	4021	—	—
	101	1.8	1/4		60	44	5.5	20	0.082		42A5BEPM	—	—	4435	4035
	135	12	1/3		12	9	0.16	0.45	0.12		42A7BEPM	4422	4022	—	—
	135	2.3	1/3		64	47	4.2	17	0.12		42A7BEPM	—	—	4437	4037
NEMA 42CZ Face Mount, Class F Temperature Rating															
2500	150	15	1/3	1.0	11	8	0.18	0.61	0.082	90	42A5BEPM	4800	4601	—	—
	150	2.7	1/3		60	45	3.2	—	0.082		42A5BEPM	—	—	4430	4031
	180	19	1/2		11.5	8.5	0.12	0.54	0.12		42A7BEPM	4802	4603	—	—
	180	3.3	1/2		57	42	2.7	—	0.12		42A7BEPM	—	—	4432	4033

[3] The fifth digit of the product type changes from "B" to "F" for accessory ready models.

Speed Regulation of Permanent Magnet DC Motors

In a PMDC motor, speed is proportional to voltage and torque is proportional to current. When voltage is held constant, the amount that speed drops due to increasing torque is called "speed regulation". The thin blue lines illustrate motor performance without the aid of a regulating electronic control. The heavy red lines illustrate performance from a control with "excellent" (1-3%) speed regulation.

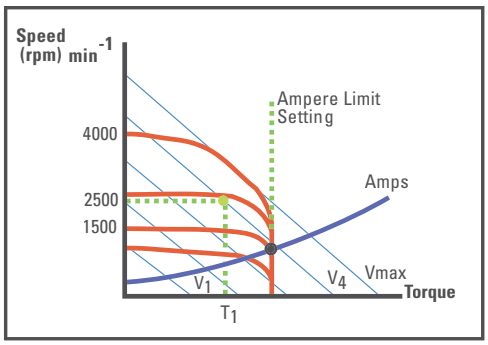

- Quiet operation, low electromagnetic interference (EMI)
- No brush maintenance or contamination from brush dust
- 60° Commutation Angle
- Wire harness differs between 24V and 130V models. Check online CAD drawings for details.
- See page 40 for accessories
- See page 49 for reference dimensions

Explosion-Proof Hazardous Location BLDC Gearmotors



Type 34B

Speed Range (rpm)	Rated Torque (oz-in)	HP	Rated Current (Amps)	VDC	Torque Constant (oz-in./A)	Voltage Constant (V/krpm)	Winding Resistance (Ohms)	Winding Inductance (mH)	Rotor Inertia (oz-in.-sec.)	Motor Inductance (mH)	Radial Load (Lbs.)	Product Type	Model Number 12V	Model Number 24V
Type 34B Brushless DC														
8-Pole, 120° Commutation, IP-66, TENV (Groups C and D; Temperature Codes T3C and T4A) **Explosion-Proof Class I, Division 1**														
2200	215	0.47	38	12	7.02	4.44	0.023	0.039	0.0337	0.052	42	34B6BXBL	3261	—
2800	237	0.66	25	24	11.4	7.22	0.056	0.108		0.139			—	3262

Special order 130 VDC or 260 VDC models, 4- or 8-pole also available. 0.47HP = 351 Watts, and 0.66HP = 492 Watts.

Brushless DC—Type 22B | 1/16-1/5 HP



Type 22B

Speed (rpm)	Rated Torque (oz-in.)	HP	Torque Constant (oz-in./A)	Voltage Constant V/krpm)	Winding Res. (Ohms)	Winding Induct. (mH)	Rotor Inertia (oz-in.-sec.^{2})	Radial Load (lb.)	Product Type[1]	Accy Shaft 24V	No Accy Shaft 24V	Accy Shaft 130V	No Accy Shaft 130V
2500	25	1/16	8.4	5.8	1.2	2.1	0.0036	25	22B2BEBL	3602	3502	—	—
2500	25	1/16	47	35	40	70	0.0036		22B2BEBL	—	—	—	3302
2500	50	1/8	9	6.7	0.52	1.1	0.0072		22B4BEBL	3604	3504	—	—
2500	50	1/8	63	37	15	40	0.0072		22B4BEBL	—	—	3404	3304
10,000	20	1/5	14	9.8	4.8	10	0.0072		22B4BEBL	—	—	—	3314

Brushless DC—Type 34B | 1/5-3/8 HP



Type 34B

Speed (rpm)	Rated Torque (oz-in.)	HP	Torque Constant (oz-in./A)	Voltage Constant V/krpm)	Winding Res. (Ohms)	Winding Induct. (mH)	Rotor Inertia (oz-in.-sec.^{2})	Radial Load (lb.)	Product Type[1]	Accy Shaft 24V	No Accy Shaft 24V	Accy Shaft 130V	No Accy Shaft 130V
2500	81	1/5	8.8	6.6	0.3	0.54	0.0115	42	34B3BEBL	3600	3500	—	—
2500	81	1/5	51	38	9.2	24	0.0115		34B3BEBL	—	—	3406	3306
2500	101	1/4	9.0	6.7	0.17	0.40	0.0154		34B4BEBL	—	3507	—	—
2500	101	1/4	51	38	5.8	14	0.0154		34B4BEBL	—	—	—	3307
2500	151	3/8	9.0	6.7	0.099	0.246	0.0215		34B6BEBL	3609	3509	—	—
2500	151	3/8	57	42	3.4	11	0.0215		34B6BEBL	—	—	3409	3309
10,000	33	1/3	14.5	10.7	1.7	4.6	0.0154		34B4BEBL	—	—	—	3317

[1] The fifth character of the product type changes from "B" to "F" for accessory ready models.

Motor Speed Controls

Our motion controls are precisely engineered to provide maximum performance from our motors and gearmotors. Choose a Bodine gearmotor and speed control and get our extended 2-year system warranty.



2 Year system warranty

AC

Inverter-Duty Three Phase Motor Speed Controls

Basic Three-Phase Chassis AC Motor Speed Control



- Speed control via external speed pot or external 0-5 VDC analog signal (isolation required)
- Adjusts current limit, max. speed, min. speed, decel. time, accel. time, and slip compensation
- Output freq. selectable between 0-60 Hz and 0-120 Hz.
- Connector for remote direction control
- Connector for remote momentary start switch
- Protection against overload, overvoltage, undervoltage, and short circuit
- UL Listed, CE
- See page 51 for reference dimensions

Three-Phase AC Output Power				Input Power		Model Number
HP	Motor V	Motor Amps	Hz	V	Hz	
1/2	230	2.4	0-120	115	50 / 60	2982
1/2		2.4		230		2983
1/2		2.4		115 / 230		2984
1		4		115 / 230		2987

NEMA 4X/IP-65 Enclosed AC Motor Speed Control



- LED status indicators provide indication of the drive's status and operating mode
- GFCI compatible
- F-B-R (Forward-Brake-Reverse), Start/Stop, and On/Off switches
- Motor current selection
- More than 200% starting torque
- Overvoltage and undervoltage
- Run/Fault relay output contacts turn equipment on/off and signal stop mode if a fault has occurred.
- No remote operation
- cULus

Three-Phase AC Output Power				Input Power		Model Number
HP	Motor V	Motor Amps	Hz	V	Hz	
1	230	3.6	0-120	115 or 208/230	50 / 60	2999

NEMA-1/IP-40 Enclosed AC Motor Speed Control



- Run/Fault relay output contacts turn equipment on/off and signal stop mode if a fault has occurred.
- Barrier terminal blocks facilitate wiring
- Motor overload (I^2t) with RMS current limit
- Electronic inrush current limit
- Regeneration eliminates tripping due to bus overvoltage
- Overvoltage and undervoltage
- No remote operation
- Built-in line filter for CE compliance
- cULus, CE

Three-Phase AC Output Power				Input Power		Model Number
HP	Motor V	Motor Amps	Hz	V	Hz	
1	230	3.6	0-120	115 or 208/230	50 / 60	2998

Type UPM | Unfiltered SCR Motor Speed Control (NEMA-4 Enclosure)



- Operates from 115 Volt AC or 230 Volt AC line
- Designed to drive 90 Volt DC or 130 Volt DC motors
- Switchable output for 0-90 Volt DC or 0-180 Volt DC
- Back EMF feedback maintains better than 2% speed regulation
- Dip switches to easily calibrate control for different motor sizes
- NEMA 4 enclosure for wet or dirty environments
- Trim pots on PC board to adjust torque limit, minimum speed limit, maximum speed limit, acceleration time, deceleration time, and speed regulation
- Speed can be adjusted manually using speed pot on front of enclosure
- Terminal block inside enclosure for quick line and motor connection
- Line fuses inside enclosure
- Line filter inside enclosure to reduce conducted EMI
- cURus, CE, RoHS

HP Rating	Input V (VAC, 50/60 Hz)	Motor Rating (VDC)	Continuous Output Current (Amps)	Peak Output Current (Amps)	FF	Product Type	Model Number
1/5 @ 90V 1/3 @ 180V	115 / 230	90 or 130 @ 115 VAC 180 @ 230 VAC	2.1	4.2	1.4	UPM-3318E4	1865

Type WPM | Filtered PWM DC Basic Speed Control (Chassis, IP-00)



WPM Chassis Control (115 V model with terminal block)

- Models 0780-0784 operate from 115 Volt AC line, 50/60 Hz
- Models 0786-0789 operate from a DC power supply or a battery
- 115V models: filtered DC output for cooler motor operation, longer brush life, lower audible noise, and wider speed range
- Back EMF feedback maintains better than 1% speed regulation
- Dip switches to easily calibrate control for different motor sizes
- Two diagnostic LEDs indicate when power is on and when current output is at limit set by TORQ pot
- Five on-board user-adjustable pots for torque limit, minimum speed limit, maximum speed limit, acceleration time, and speed regulation
- Speed can be adjusted manually using a remote 10k speed pot (included with control)
- Connections for optional user-supplied inhibit switch
- cURus, RoHS



WPM Chassis Control (12 or 24 V models)

HP Rating		Input V (VAC, 50/60 Hz)	Motor Rating (VDC)	Continuous Output Current (Amps)	Peak Output Current (Amps)	FF	Product Type	Model Number	
								1/4 in. QC tab	Terminal Block
WPM Chassis Filtered PWM DC Control (115 V Models)									
1/4		115	90 or 130	2.0	2.5	1.0	WPM-2109C	0780	0783
7/16				3.2	5		WPM-2137C	0781	0784
WPM Chassis PWM DC Control (12 and 24 V Models)									
1/12 @1250 rpm	1/6 @2500 rpm	(VDC) 12-14	12	15	35	1.0	WPM-2137C	—	0787
				17				0786	—
—	1/3	24-35	24	14				0788	0789

Type WPM | Filtered PWM DC Basic Speed Control (NEMA-1, IP-40)



WPM Enclosed Control (Speed only)

- Filtered DC output
- Designed to drive 90 Volt DC or 130 Volt DC motors
- Dip switches to easily calibrate control
- Model 0794: includes F-B-R (forward-brake-reverse) switch
- Line voltage compensation minimizes speed drift
- Trim pots on PC board to adjust torque limit, minimum speed limit, maximum speed limit, acceleration time, and speed regulation
- Manual speed adjustment
- Terminal block inside enclosure
- Back EMF feedback maintains better than 2% speed regulation
- Factory installed AC line cable
- cURus, RoHS



WPM Enclosed Control (With Direction Switch)

HP Rating	Input V (VAC, 50/60 Hz)	Motor Rating (VDC)	Continuous Output Current (Amps)	Peak Output Current (Amps)	FF	Product Type	Model Number
WPM Enclosed Filtered PWM DC Control							
1/4	115	90 or 130	2.0	2.5	1.0	WPM-2109E1	0790
7/16			3.2	5		WPM-2137E1	0791
WPM Enclosed Filtered PWM DC Speed and Direction Control							
7/16 @ 90 V 5/8 @ 130 V	115	90 or 130	3.7	7.1	1.0	WPM-2148E1	0794

For control accessories see page 40. See page 50 for reference dimensions. Visit our website for 2D/3D CAD drawings.

Type FPM | Filtered SCR DC Basic Speed Control



- Designed to drive 90 Volt DC or 130 Volt DC motors
- Dip switches to easily calibrate control
- Line voltage and temperature compensation
- Trim pots on PC board to adjust torque limit, minimum speed limit, maximum speed limit, acceleration time, and speed regulation.
- Back EMF feedback maintains better than 2% speed regulation
- 10k Ohm remote speed pot and 24" connecting wire supplied with each control
- Connections for optional user-supplied inhibit switch
- Terminal block
- Plug-in connector for speed pot and optional user supplied inhibit switch
- Flexibility in adding plug-in interface boards
- Built-in line and motor fuseholders (both fuses supplied)
- UR, CSA, RoHS

HP Rating	Input V (VAC, 50/60 Hz)	Motor Rating (VDC)	Continuous Output Current (Amps)	Peak Output Current (Amps)	FF	Product Type	Model Number
1/17	115	90 or 130	0.5	1	1.0	FPM-0810C	0810
1/6			1.25	2.5		FPM-0830C	0830
1/3			2.3	4.6		FPM-0850C	0850

Type FPM | Filtered SCR DC Basic Speed Control (NEMA-12 Enclosure)



- Designed to drive 90 Volt DC or 130 Volt DC motors
- Dip switches to easily calibrate control
- Line voltage and temperature compensation
- Trim pots on PC board to adjust torque limit, minimum speed limit, maximum speed limit, acceleration time, and speed regulation.
- Manual speed adjustment
- Terminal block inside enclosure
- Back EMF feedback maintains better than 2% speed regulation.
- Fuse holders for line and motor inside enclosure (both fuses supplied)
- UR, CSA, RoHS

HP Rating	Input V (VAC, 50/60 Hz)	Motor Rating (VDC)	Continuous Output Current (Amps)	Peak Output Current (Amps)	FF	Product Type	Model Number
FPM Enclosed Filtered SCR DC Controls NEMA 12, Basic Speed Control							
1/17	115	90 or 130	0.5	1	1.0	FPM-0815E	0815
1/6			1.25	2.5		FPM-0835E	0835
1/3			2.3	4.6		FPM-0855E	0855

Type FPM | Filtered SCR DC Basic Speed and Direction Control (NEMA-12 Enclosure)



- Filtered DC output for different motor sizes.
- Designed to drive 90 Volt DC or 130 Volt DC motors
- Line voltage and temperature compensation
- Dynamic braking for quick stops
- Trim pots on PC board to adjust torque limit, minimum speed limit, maximum speed limit, acceleration time, and speed regulation
- Manual speed adjustment
- Rotary switch on enclosure for direction
- Terminal block inside enclosure for motor connection
- Back EMF feedback maintains better than 2% speed regulation
- Fuse holders for line and motor inside enclosure (fuses included)
- UR, CSA, RoHS

HP Rating	Input V (VAC, 50/60 Hz)	Motor Rating (VDC)	Continuous Output Current (Amps)	Peak Output Current (Amps)	FF	Product Type	Model Number
FPM Enclosed Filtered SCR DC Controls NEMA 12, Speed and Direction Control							
1/17	115	90 or 130	0.5	1	1.0	FPM-0818E	0818
1/6			1.25	2.5		FPM-0838E	0838
1/3			2.3	4.6		FPM-0858E	0858

Type FPM | Filtered SCR DC Remote Speed Control (NEMA-12 Enclosure)



- Designed to drive 90 Volt DC or 130 Volt DC motors
- Dip switches to easily calibrate control
- Line voltage and temperature compensation
- Trim pots on PC board to adjust torque limit, minimum speed limit, maximum speed limit, acceleration time, and speed regulation
- Speed can be adjusted manually
- Terminal block inside enclosure
- Back EMF feedback maintains better than 2% speed regulation
- Fuse holders for line and motor inside enclosure (both fuses supplied)
- UR, CSA, RoHS

HP Rating	Input V (VAC, 50/60 Hz)	Motor Rating (VDC)	Continuous Output Current (Amps)	Peak Output Current (Amps)	FF	Remote Signal	Product Type	Model Number
FPM Enclosed Filtered SCR DC Controls NEMA 12, Remote Speed Control								
1/17	115	90 or 130	0.5	1	1.0	Analog	FPM-0816E	0816
1/6			1.25	2.5		Analog	FPM-0836E	0836
1/3			2.3	4.6		Analog	FPM-0856E	0856

Type UPM | Unfiltered SCR DC Remote Speed Control



- Designed to drive 90 Volt DC or 130 Volt DC motors
- Switchable output for 0-90 Volt DC or 0-180 Volt DC.
- Back EMF feedback maintains better than 2% speed regulation.
- Dip switches to easily calibrate control
- Two diagnostic LEDs indicate when power is on and when current output is at limit set by TORQ pot
- Six on-board user-adjustable pots for torque limit, minimum speed limit, maximum speed limit, acceleration time, deceleration time and speed regulation
- Speed can be adjusted manually using a remote 10K speed pot (included with control)
- Unfiltered drive draws lower AC line current than comparable SCR filtered controls
- Connections for optional user-supplied inhibit switch
- cURus, CE, RoHS

HP Rating	Input V (VAC, 50/60 Hz)	Motor Rating (VDC)	Continuous Output Current (Amps)	Peak Output Current (Amps)	FF	Product Type	Model Number	
							1/4 in. QC tab	Terminal Block
UPM Unfiltered SCR DC Controls Chassis, Basic Speed Control								
1/5 @ 90 V 1/3 @ 180 V	115/230	90 or 130 @ 115 VAC 180 @ 230 VAC	2.1	4.2	1.6	UPM-3318C	0865	0866

Type UPM | NEMA-1 Unfiltered SCR Basic Speed Control (NEMA-1 Enclosure)



- Designed to drive 90 Volt DC or 130 Volt DC motors
- Line voltage compensation minimizes speed drift
- Back EMF feedback maintains better than 2% speed regulation.
- Dip switches to easily calibrate control
- Trim pots on PC board to adjust torque limit, minimum speed limit, maximum speed limit, acceleration time, deceleration time, and speed regulation
- Two diagnostic LEDs indicate when power is on and when current output is at limit set by TORQ pot
- Manual speed adjustment
- Terminal block inside enclosure
- Unfiltered drive draws lower AC line current than comparable SCR filtered controls
- Connections for optional user-supplied inhibit switch
- cURus, RoHS

HP Rating	Input V (VAC, 50/60 Hz)	Motor Rating (VDC)	Continuous Output Current (Amps)	Peak Output Current (Amps)	FF	Product Type	Model Number
UPM Enclosed Unfiltered SCR DC Controls NEMA 1, Basic Speed Control							
1/5	115	90 or 130	2.1	4.2	1.6	UPM-3318E1	0867

Type ABL | Low Voltage PWM BLDC Speed and Direction Control (Chassis, IP-00)



Models 3904, 3905 and 3907



Models 3908, 3909, 3919 and 3920

- Ideal for portable, battery operated applications
- On-board speed potentiometer for manual adjustment
- Accepts 0-5 VDC analog signal for remote operation
- Unique Smart Reverse™ circuit provides quick reversing and prevents motor plugging
- Dynamic braking for quicker stops
- 12 pulse/revolution tach output provides indication of motor speed
- Models 3904, 3905 and 3907: Logic output indicates control shutdown due to a motor overload
- Speed can be adjusted manually or by remote control over a range of 30:1
- 10k Ohm remote speed pot supplied with each control
- Inherent closed loop system maintains a 2% maximum change in motor speed from 0-100% of rated load when operated at rated speed
- cURus, RoHS
- 60° commutation is standard

HP Rating	Input V (VDC)	Motor Rating (VDC)	Continuous Output Current (Amps)	Peak Output Current (Amps)	FF	Product Type	Model Number
Chassis Low Voltage PWM BLDC (24 V Models)							
1/6	24-35	24	10	13.5	1.0	ABL-3905C	3905
3/8			20	30		ABL-3907C	3907
Chassis Low Voltage PWM BLDC (12 V Model)							
Contact Factory	12-14	12	20	30	1.0	ABL-3907C	3904
Compact Chassis Low Voltage PWM BLDC (12 and 24 V Models)							
1/4	12-14	12	20	30	1.0	ABL-3906C	3908
3/8	24-35	24	18	27			3909
Compact Chassis Low Voltage PWM BLDC (24 V Model) **120° Commutation**							
3/8	24-35	24	18	27	1.0	ABL-3906C	3919

Metric Motors and Gearmotors

Our metric gearmotors and motors feature metric shafts and mounting configurations. AC metric motors are rated at 230 VAC / 50 Hz. Permanent magnet DC motors are available with voltage ratings of 180 VDC. Custom windings can be provided to match almost any international rating. We also offer a complete line of both AC and DC metric right angle and parallel shaft gearmotors.



A/T Metric—Parallel Shaft Gearmotors | up to 0.67 Nm

- Metric mounting threads and shaft dimensions
- Three-wire winding simplifies reversing
- Impedance protected to prevent current overload (gearmotor should not be stalled when powered up)
- See page 40 for capacitors

Fixed Speed—AC Gearmotors



Type K-2A/T

Speed (rpm)	Rated Torque oz-in.	Rated Torque Nm	Power HP	Power Watts	Rated Voltage	Freq. (Hz)	Ph	Current (Amps)	Gear Ratio	Radial Load (oz.)	Capacitor (µF/VAC)	Product Type	Model Number
												CAPACITOR IS REQUIRED	
7	95	0.67	1/300	2.8	230	50	1	0.06	180	20	0.4/440	KCI-26T4	1757
42	75	0.53							30			KCI-26A2	1754
69	45	0.31							18			KCI-26A2	1753
210	15	0.11							6			KCI-26A2	1752

D Metric —Parallel Shaft Gearmotors | up to 4.5 Nm

- Metric mounting threads and shaft dimensions
- Unvented gearhousing for universal horizontal mounting
- Helical primary gear for quietness and hardened steel spur gearing on subsequent stages for high output torque and long life
- See page 40 for capacitors and accessories

Fixed Speed—AC Gearmotors



Type 30R-D

Speed (rpm)	Rated Torque lb-in.	Rated Torque Nm	Power HP	Power Watts	Rated Voltage	Freq. (Hz)	Ph	Current (Amps)	Gear Ratio	Radial Load (lbs.)	Capacitor (µF/VAC)	Product Type	Model Number
												CAPACITOR IS REQUIRED	
7.8	40	4.5	1/48	15	230	50	1	0.17	180	65	1.3/440	30R1BECI-D4	1562
23	40	4.5	1/41	18				0.21	60			30R2BECI-D3	1574
47	24	2.7	1/41	18				0.21	30			30R2BECI-D3	1573
78	14	1.6	1/41	18				0.21	18			30R2BECI-D3	1572
117	9.7	1.1	1/41	18				0.21	12			30R2BECI-D3	1571

Permanent Magnet DC Gearmotors



Type 24A-D

Speed (rpm)	Rated Torque lb-in.	Rated Torque Nm	Power HP	Power Watts	Rated Voltage	Current (Amps)	Gear Ratio	Radial Load (lbs.)	Product Type	Model Number
5.8	40	4.5	1/49	15	180	0.13	300	65	24A2BEPM-D5	1398
9.6	40	4.5	1/49	15		0.13	180		24A2BEPM-D4	1397
29	40	4.1	1/32	23		0.18	60		24A4BEPM-D3	1395
58	18	2.0	1/32	23		0.18	30		24A4BEPM-D3	1394
144	7.3	0.8	1/32	23		0.18	12		24A4BEPM-D3	1392

Visit www.bodine-electric.com for 2D/3D CAD drawings

Z Metric—Parallel Shaft Gearmotors | up to 11.3 Nm

- Metric mounting threads and shaft dimensions
- Aluminum center ring and endshields
- Unvented gearhousing
- Industrial lip type seals on motor and output shafts
- Needle bearings on output shaft
- Permanently lubricated with high-performance lubricant
- Helical pinion accurately cut on motor shaft for maximum strength and minimum noise
- *34R-Z:* die cast terminal box with terminal block included
- See page 40 for capacitors

Fixed Speed—AC Gearmotors


Type 34R-Z

Speed (rpm)	Rated Torque lb-in.	Rated Torque Nm	Power HP	Power Watts	Rated Voltage	Freq. (Hz)	Ph	Current (Amps)	Gear Ratio	Radial Load (lbs.)	Capacitor (µF/VAC)	Product Type	Model Number
Permanent Split Capacitor, Non-synchronous (TEFC)												CAPACITOR IS REQUIRED	
7.8	100	11.3	1/15	50	230	50	1	0.48	180	125	5.0/370	34R4BFCI-Z4	1449
23	100	11.3						0.5	60	125		34R4BFCI-Z3	1455
70	40	4.5						0.5	20	100		34R4BFCI-Z2	1453
233	15	1.7						0.5	6	100		34R4BFCI-Z2	1451

Permanent Magnet DC Gearmotors


Type 24A-Z


Type 33A-Z

Speed (rpm)	Rated Torque lb-in.	Rated Torque Nm	Power HP	Power Watts	Rated Voltage	Current (Amps)	Gear Ratio	Radial Load (lbs.)	Product Type	Model Number
24A-Z PMDC Gearmotor										
9.6	100	11.3	1/32	23	180	0.18	180	125	24A4BEPM-Z4	1163
29	36	4.1					60	125	24A4BEPM-Z3	1161
58	18	2.0					30	125	24A4BEPM-Z3	1160
288	4	0.44					6	100	24A4BEPM-Z2	1157
33A-Z PMDC Gearmotor										
29	69	7.8	1/23	32	180	0.33	60	125	33A3BEPM-Z3	6269
58	35	3.9					30	125	33A3BEPM-Z3	6268
144	15	1.7					12	100	33A3BEPM-Z2	6266

Our metric PMDC motors and gearmotors are rated for operation with an unfiltered SCR speed control and a Form Factor (F.F.) of 1.6"

W Metric —Parallel Shaft Gearmotors | up to 19.8 Nm

- Metric mounting threads and shaft dimensions
- Lubricated for life
- Synthetic lubricant improves performance, and allows these gearmotors to operate in a wide temperature range
- Models with accessory shafts are ideal for mounting encoders or brakes
- *34R-W:* Die cast terminal box with terminal block included
- Adaptor plate, model 0995, allows for 3-hole mounting configuration. See Page 40.

Fixed Speed—AC Gearmotors


Type 34R-W

Speed (rpm)	Rated Torque lb-in.	Rated Torque Nm	Power HP	Power Watts	Rated Voltage	Freq. (Hz)	Ph	Current (Amps)	Gear Ratio	Radial Load (lbs.)	Capacitor (µF/VAC)	Product Type	Model Number
Permanent Split Capacitor, Non-synchronous												CAPACITOR IS REQUIRED	
4.5	175	19.8	1/10	75	230	50	1	0.6	312.4	130	7.5/370	34R6BFCI-W4	1477
21	146	16.5							65.5	130		34R6BFCI-W3	1484
69	53	6							20.4	65		34R6BFCI-W2	1481
255	14	1.6							5.5	65		34R6BFCI-W2	1478

Permanent Magnet DC Gearmotors


Type 33A-W

Speed (rpm)	Rated Torque lb-in.	Rated Torque Nm	Power HP	Power Watts	Rated Voltage	Current (Amps)	Gear Ratio	Radial Load (lbs.)	Product Type	Model Number
5.5	175	19.8	1/23	32	180	0.33	312.4	130	33A3BEPM-W4	6247
18	151	17.0	1/14	54		0.41	97.5	130	33A5BEPM-W4	6256
39	78	8.8	1/14			0.41	43.9	130	33A5BEPM-W3	6254
85	39	4.4	1/14			0.41	20.4	65	33A5BEPM-W2	6252
125	27	3.0	1/14			0.41	13.8	65	33A5BEPM-W2	6251
315	11	1.2	1/14			0.41	5.48	65	33A5BEPM-W2	6249

Control models 1865 (see page 30) and 0865, 0866 (see page 32) are available for metric gearmotors and motors.

E Metric—Parallel Shaft Gearmotors | up to 38.5 Nm

- Metric mounting threads and shaft dimensions
- Unvented gearhousing
- All steel gearing
- Industrial lip type seals on motor and output shafts
- Needle bearings throughout for increased radial load capacity and long life
- Permanently lubricated
- *42R-E:* Die cast terminal box with terminal block included
- *F-type only:* Hardened helical gearing for quietness and high output to size ratio
- Dual voltage (230/460V) models are also available

Fixed Speed—AC Gearmotors



Type 42R-E

Speed (rpm)	Rated Torque lb-in.	Rated Torque Nm	Power HP	Power Watts	Rated Voltage	Freq. (Hz)	Ph	Current (Amps)	Gear Ratio	Radial Load (lbs.)	Capacitor (µF/VAC)	Product Type	Model Number
Three-phase, Non-synchronous													
140	50	5.6	1/5	140	230/400	50	3	1.1/.61	10	300		42R5BFPP-E2	1665
Permanent Split Capacitor, Non-synchronous												***CAPACITOR IS REQUIRED***	
4.7	310	35							300	200		42R5BFCI-E4	1671
7.8	341	38.5							180	200		42R5BFCI-E4	1669
23	297	33.6							60	200		42R5BFCI-E3	1685
47	148	16.7	1/7.5	100	230	50	1	0.78	30	300	7.5/370	42R5BFCI-E3	1683
70	99	11.2							20	300		42R5BFCI-E3	1681
140	50	5.6							10	300		42R5BFCI-E2	1680
280	26	2.9							5	300		42R5BFCI-E1	1679
Split phase Non-synchronous (with centrifugal switch)													
47	148	16.7	1/7.5	100	230	50	1	0.78	30	300		42R5BFSI-E3	1653

Permanent Magnet DC Gearmotors



Type 42A-E/F

Speed (rpm)	Rated Torque lb-in.	Rated Torque Nm	Power HP	Power Watts	Rated Voltage	Current (Amps)	Gear Ratio	Radial Load (lbs.)	Product Type	Model Number
5.8	310	35	1/6	121	180	0.85	300	200	42A5BEPM-E4	4275
29	274	31				1	60	200	42A7BEPM-E3	4285
43	177	20				1	40	200	42A7BEPM-E3	4284
86	89	10	1/5	153	180	1	20	300	42A7BEPM-E3	4282
173	45	5.1				1	10	300	42A7BEPM-E2	4280
345	25	2.8				1	5	300	42A7BEPM-E1	4279

3F Metric —Right Angle Gearmotors | up to 16.7 Nm

- Metric mounting threads and shaft dimensions
- Industrial lip seals on motor and output shafts
- Needle bearings on output shaft for increased radial load capacity and long life
- Permanently lubricated with high-performance lubricant
- Bronze gear for high shock load capability
- Hardened and ground worm for high strength and long life
- *34R-3F:* Die cast terminal box (IP-44) with terminal block included

Fixed Speed—AC Gearmotors



Type 34R-3F

Speed (rpm)	Rated Torque lb-in.	Rated Torque Nm	Power HP	Power Watts	Rated Voltage	Freq. (Hz)	Ph	Current (Amps)	Gear Ratio	Radial Load (lbs.)	Capacitor (µF/VAC)	Product Type	Model Number
Permanent Split Capacitor, Non-synchronous												***CAPACITOR IS REQUIRED***	
35	37	4.2							40	40			1491
47	34	3.8	1/15	50	230	50	1	0.5	30	40	5.0/370	34R4BFCI-3F	1487
70	30	3.4							20	40			1490
140	19	2.1							10	5			1488

Permanent Magnet DC Gearmotors



Type 24A-3F

Speed (rpm)	Rated Torque lb-in.	Rated Torque Nm	Power HP	Power Watts	Rated Voltage	Current (Amps)	Gear Ratio	Radial Load (lbs.)	Product Type	Model Number
43	16	1.8					40			1098
86	9.7	1.1	1/32	23	180	0.18	20	40	24A4BEPM-3F	1096
172	5.3	0.6					10			1094

5N/5F Metric—Right Angle Gearmotors | up to 12.8 Nm

- Metric mounting threads and shaft dimensions
- Unvented gearhousing for universal horizontal mounting
- Bronze worm gear for high shock load capability
- Hardened and ground worm for strength and long life
- Models with accessory shafts are ideal for mounting encoders or brakes
- *AC Gearmotors:* Die cast terminal box with terminal block included
- See page 40 for capacitors and terminal boxes

Fixed Speed—AC Gearmotors



Type 34R-5F



Type 42R-5F and 42R-5N

Speed (rpm)	Rated Torque lb-in.	Rated Torque Nm	Power HP	Power Watts	Rated Voltage	Freq. (Hz)	Ph	Current (Amps)	Gear Ratio	Radial Load (lbs.)	Capacitor (µF/VAC)	Product Type	Model Number
34R-5F Gearmotor													
Permanent Split Capacitor, Non-synchronous													***CAPACITOR IS REQUIRED***
23	72	8.1	1/15	50	230	50	1	0.5	60	50	5.0/370	34R4BFCI-5F	1469
35	60	6.8	1/15						40	50			1468
70	39	4.4	1/15						20	50			1466
140	21	2.4	1/15						10	30			1465
42R-5F Gearmotor													
Permanent Split Capacitor, Non-synchronous													***CAPACITOR IS REQUIRED***
35	93	10.5	1/9	83	230	50	1	0.63	40	80	7.5/370	42R4BFCI-5F	1627
70	60	6.8	1/9						20	80			1624
140	32	3.6	1/9						10	10			1623
42R-5N Gearmotor													
Three-phase, Non-synchronous													
47	109	12.3	1/5	140	230/400	50	3	1/1/.61	30	180	—	42R5BFPP-5N	1633
Permanent Split Capacitor, Non-synchronous													***CAPACITOR IS REQUIRED***
32	113	12.8	1/7.5	100	230	50	1	0.83	40	180	7.5/370	42R5BFCI-5N	1678
65	80	9.0							20				1677

Permanent Magnet DC Gearmotors



Type 33A-5F



Type 42A-5N

Speed (rpm)	Rated Torque lb-in.	Rated Torque Nm	Power HP	Power Watts	Peak Torque (lb-in.)	Rated Voltage	Current (Amps)	Gear Ratio	Radial Load (lbs.)	Product Type	Model Number
33A-5F Gearmotor											
43	45	5.1	1/14	54	118	180	0.41	40	80	33A5BEPM-5F	6244
86	29	3.3			100			20			6242
173	17	1.9			54			10			6241
345	8.9	1			28			5			6240
42A-5N Gearmotor											
43	81	9.1	1/6	121	177	180	0.85	40	120	42A5BEPM-5N	4238
85	55	6.2						20			4236
172	31	3.5						10			4235

5H Metric—Right Angle Gearmotors | up to 14.2 Nm

Permanent Magnet DC Gearmotors



Type 42A-5H

Speed (rpm)	Rated Torque lb-in.	Rated Torque Nm	Power HP	Power Watts	Peak Torque (lb-in.)	Rated Voltage	Current (Amps)	Gear Ratio	Radial Load (lbs.)	Product Type	Model Number
36	126	14.2	1/5	153	340	180	1	48	150	42A7BEPM-5H	4299
96	81	9.2			247			18			4296

GB Metric—Right Angle Gearmotors | up to 43 Nm

- Metric mounting threads and shaft dimensions
- Unvented gearhousing for universal horizontal mounting
- Hardened helical output gearing
- Bronze worm gear for high shock load capability
- Hardened and ground worm hobbed on the motor shaft for high strength and long life
- Models with accessory shafts are ideal for mounting encoders or brakes
- See page 40 for capacitors and terminal boxes
- *42R-GB:* Die cast terminal box with terminal block included

Fixed Speed—AC Gearmotors



Type 42R-GB

Speed (rpm)	Rated Torque lb-in.	Rated Torque Nm	Power HP	Power Watts	Rated Voltage	Freq. (Hz)	Ph	Current (Amps)	Gear Ratio	Radial Load (lbs.)	Capacitor (µF/VAC)	Product Type	Model Number
5	380	43	1/7.5	100	230	50	1	0.78	280	200	7.5/370	42R5BFCI-GB	1266
7.4	375	42							190				1264
12	290	33							120				1262
23	204	23							60				1260

Permanent Magnet DC Gearmotors



Type 42A-GB

Speed (rpm)	Rated Torque lb-in.	Rated Torque Nm	Power HP	Power Watts	Rated Voltage	Current (Amps)	FF	Gear Ratio	Radial Load (lbs.)	Product Type	Model Number
6.2	380	42.8	1/6	121 / 129	180	0.85 / 0.87	1.6 / 1.0	280	200	42A5BEPM-GB	1366
9	358	40.4						190			1364
14.4	250	28.3						120			1362
28.8	150	17						60			1360

Metric Motors Without Gearing

- Die cast terminal box with terminal block included with 34R and 42R motors
- See Page 40 for capacitors and terminal boxes

AC Metric —Fixed Speed AC Induction | up to 140 Watts



Speed (rpm)	Rated Torque (oz-in.)	Rated Torque (Nm)	Power (HP)	Power (Watts)	Rated Voltage	Frequency (Hz)	Ph	Current (Amps)	Radial Load (lbs.)	Capacitor (µF/VAC)	Product Type	Model Number
30R											***CAPACITOR IS REQUIRED***	
2850	9	0.06	1/39	19	230	50	1	0.38	18	1.3/440	30R2BECI	1319
1400	18	0.13	1/41	18				0.21				1340
34R												
1400	97	0.69	1/7.5	100	230/400	50	3	.78/.45	42	No Capacitor	34R6BFPP	1295
1400	72	0.51	1/10	75	230		1	0.6		7.5/370	34R6BFCI	1291
42R												
1400	135	0.95	1/5	140	230/400	50	3	1.1/0.61	50	No Capacitor	42R5BFPP	1273
1400	97	0.68	1/7.5	100	230		1	0.78		7.5/370	42R5BFCI	1358

DC Metric —Permanent Magnet DC Motors | up to 200 Watts



Speed (rpm)	Rated Torque (oz-in.)	Rated Torque (Nm)	Power (HP)	Power (Watts)	Rated Voltage	FF	Current (Amps)	Radial Load (lbs.)	Product Type	Model Number
33A (Face Mount, Base Optional)										
1725	25	0.18	1/23	32	180	1.6 / 1.0	0.31	55	33A3BEPM	6216
1725	55	0.39	1/11	70			0.62		33A5BEPM	6227
1725	95	0.67	1/6	121			0.88		33A7BEPM	6237
3000	55	0.39	1/6	122			0.89		33A5BEPM	6230
3000	80	0.57	1/4	178			1.3		33A7BEPM	6231
42A (Face or Base Mount, Base Installed)										
1725	95	0.68	1/6	121	180	1.6 / 1.0	0.85	90	42A5BEPM	4227
3000	70	0.49	1/5	155			1.17		42A5BEPM	4230
1725	120	0.85	1/5	153			1		42A7BEPM	4237
3000	90	0.63	1/4	200			1.5		42A7BEPM	4231

Accessories



"L" Brackets

	Model No.	Description
A	0969	Kit for E, F and FX gearmotors (will not fit 48R-F or 48R-FX)
B	0970	Kit for WX gearmotors
C	0979	Kit for 34R and 34B motors
D	0980	Kit for 34R-Z gearmotors
E	0990	Kit for 24A motors
F	5968	Kit for 30R and 33A motors; 30R-D, 24A-D, 22B-D, 24A-Z, 33A-Z and 22B-Z gearmotors

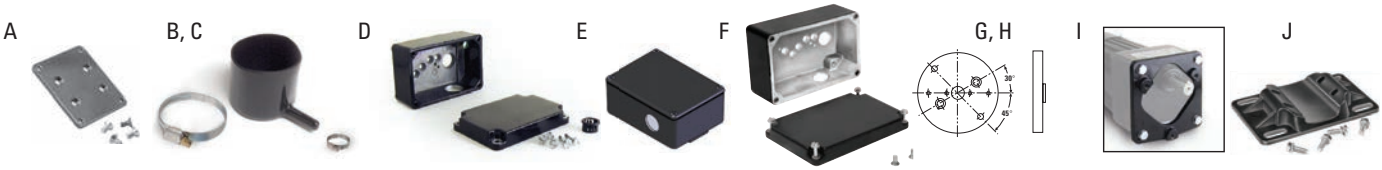

Motor and Gearmotor Accessory Kits











	Model No.	Description
A	0967	Base plate kit for 3F gearmotors
B	0977	IP-44 protection kit for 33A gearmotors and motors
C	0978	IP-44 protection kit for 42A gearmotors and motors
D	0984	Die cast terminal box kit for 34R, 42R, 48R, and 33A, 42A motors and gearmotors *(DC: does not fit on 12 or 24VDC models)*
E	0985	Large die cast t-box kit. Fits capacitor for use with 42R-FX gearmotors. Also fits 42R, 48R, 33A and 42A motors/gearmotors.
F	0986	Large die cast t-box kit. For use with 34R, 42R, 48R, 42R-FX, 33A, 42A motors/gearmotors
—	1982	Die cast terminal box with terminal block for 30R motors and gearmotors
—	1984	Die cast terminal box kit with terminal block for 34R, 42R, 48R, 33A and 42A motors/gmtrs. *90/130, 130V and 180VDC models only.*
—	5982	Die cast terminal box for 30R motors and gearmotors
G	0992	Adaptor plate for mounting brakes or encoders for 33A/42A gearmotors/motors with accy. ready shaft extensions
H	0993	Adaptor plate for mounting brakes or encoders for 22B/34B gearmotors/motors with accy. ready shaft extensions
I	0995	3-hole adaptor plate for E, F, WX and FX gearmotors. Provides drop-in replacement for competitive gearmotors.
J	0991	Die cast base kit for 42A motors and gearmotors
K	0996	Base kit for 34R motors and gearmotors
L	0960	Mounting flange for 60P planetary gearmotors (U.S.)
M	0961	Mounting flange for 60P planetary gearmotors (metric)
N	0962	IP-66 seal kit for 60P planetary gearmotors (u.S.)
O	0963	IP-66 seal kit for 60P planetary gearmotors (metric)
P	0958	Base mount kit for 5L/H hollow shaft gearmotors
Q	0957	Base mount kit for type 25H2 hollow shaft gearmotors
Q	0959	Base mount kit for type 30H3 hollow shaft gearmotors
R	0931	Base mount kit for Class I, Division 1 motors and gearmotors

Capacitors



Box-Type Capacitor



Metal Can-Type Capacitor

Select a run capacitor based on the specifications found on pages 6-28 (34-38 for metric models) and in the tables below. The AC gearmotor or motor nameplate states the required capacitance of the run capacitor, but it is also critical to specify a capacitor that has the voltage ratings as shown in these tables. When using a run capacitor that is not supplied by Bodine Electric, please make sure the voltage rating is equal to or higher than the voltage rating specified on this page. Different motor sizes might require a different minimum voltage rating for the run capacitor.

Part No.	µF /VAC
Box-Type Metalized Film Capacitor (Plastic Case)	
49400045 [1]	0.9/250
49400046 [1]	1.0/250
49400047 [1]	1.2/250
49400048 [1]	1.3/250
49400050 [1]	1.5/250
49400051 [1]	1.6/250
49401049	0.4/440
49400091	1.3/450
49401047	2.3/250

Part No.	µF /VAC
49426812 [1]	4.0/250
49401015	5.0/250
49401154 [1, 3]	7.5/370
49401054	10.0/250
49401115 [1]	6.0/450
49401106	9.0/250
49401006	12.5/250
49401156 [3]	15.0/250
49401113 [1]	20.0/250
49401112 [1]	27.5/250
49401090 [1]	30.0/250

Part No.	µF /VAC
49401123 [1]	3.75/370
49401068 [1]	5.0/400
49401107 [1]	12.5/370
49401075 [1]	15.0/350
49401057	20.0/350
Round Metal Can-Type Capacitor	
49401124	25.0/370
49401145 [2]	45.0/250
49401147 [2]	40.0/250
49401148 [2]	10.0/450

[1] Capacitor fits inside terminal box kit model 0984. [2] Capacitor fits inside oversized terminal box model number 0985. [3] New capacitor part number effective 06/2016.

Capacitor Mounting Clamps



	Model No.	Description
A	54701013	Mounting clamp for round, metal can type capacitor model 49401124
B	54701036	Mounting clamp for round, metal can type capacitors: models 49401145, 49401147, and 49401148

For mounting details and dimensions, visit www.bodine-electric.com



Shaft Accessories

Item	Model No.	Description
A	0910	Shaft kit for type 3F/H gearmotors, 1/2 inch diameter, single shaft, stainless steel
B	0920	Shaft kit for type 3F/H gearmotors, 1/2 inch diameter, double shaft, stainless steel
A	0912	Shaft kit for type 5L/H gearmotors, 5/8 inch diameter, single shaft, stainless steel
B	0922	Shaft kit for type 5L/H gearmotors, 5/8 inch diameter, double shaft, stainless steel
C	0917	Shaft kit for type GB/H gearmotors, 3/4 inch diameter, single shaft, stainless steel
B	0927	Shaft kit for type GB/H gearmotors, 3/4 inch diameter, double shaft, stainless steel
D	0928	Shaft kit for type 5L/H gearmotors, 5/8 inch to 3/4-inch diameter, single shaft, stainless steel
E	0929	Shaft kit for type 25H2 gearmotors, 1 inch diameter, single shaft, fatigue proof
E	0930	Shaft kit for type 30H3 gearmotors, 1-1/4 inch diameter, single shaft, fatigue proof
C	0932	Shaft Kit for type HG/H gearmotors, 3/4-inch, single shaft, stainless steel
B	0933	Shaft Kit for type HG/H gearmotors, 3/4-inch, double shaft, stainless steel
F	0950	Cover kit for type 3F/H gearmotors
G	0951	Cover kit for type 5L/H and GB/H gearmotors
H	0952	Cover kit for type 25H2 gearmotors
H	0953	Cover kit for type 30H3 gearmotors
I	0954	Cover kit for type HG/H gearmotors
J	0955	Flange mount kit for 3F/H gearmotors
K	0956	Flange mount kit for 5L/H and GB/H gearmotors
L	0964	Encoder shaft kit, 3/8 inch diameter,- fatigue proof. For type 22B-60P, 33A-25H2 / -30H3 and 33A-HG/H gearmotors

Control Accessories



Item	Model No.	Description
—	0888	**Analog Interface Board** for use with model 0810, 0830, and 0850 controls. Allows control to accept a variable voltage or current signal from user's host controller to automatically control motor speed. Inputs are optically isolated.
—	0890	**Electronic Direction and Braking Board, F-B-R Kit,** for use with model 0810, 0830, and 0850 controls. Allows user to change motor direction and to dynamically brake motor to a quick stop. Inputs are not optically isolated. This kit includes one F-B-R board, one cable and connector, mounting hardware, and two additional braking resistors.
—	0893	**Local/Remote Switch** for use with model 0810, 0830, and 0850 controls when used with accessory model 0888. Allows user to switch between automatic and manual operation.
—	0895	**Switch Sealing Kit** upgrades NEMA-12 brushless DC and PMDC enclosed controls to IP-44 rating.
—	43300260	**Speed Potentiometer Kit** for use with FPM controls. Contains 10k Ohm potentiometer, hardware, wire and connector for manually regulating motor speed.

Metric Accessories

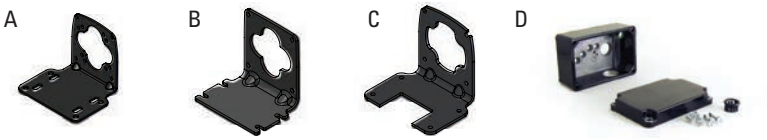

Metric "L" Brackets

Item	Model No.	Description
A	1968	Metric Kit for 33A motors, and type D and Z gearmotors
B	1970	Metric Kit for type W gearmotors
C	1969	Metric Kit for E, F and FX gearmotors (will not fit 48R-F or 48R-FX)
—	—	no "L" bracket kits are available for 34R and 34R-Z gearmotors

Metric Motor and Gearmotor Kits

Item	Model No.	Description
D	1982	Metric die cast terminal box kit for 30R motors and gearmotors
D	1984	Metric die cast terminal kit with terminal block for 33A, 34R, 42A and 42R motors and gearmotors. *For 90/130, 130V and 180VDC models only.*

Reference Drawings and Dimensions

60P Planetary Gearmotor Dimensions

Dimensions (in inches unless otherwise noted) are for reference only. For CAD drawings and specs, visit **bodine-electric.com**.

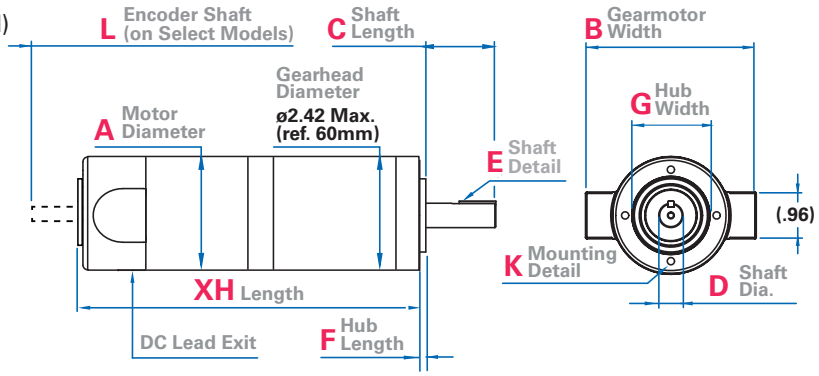

Gearhead Type 60P, page 6

	Product Type	Wt. (lbs.)	XH Length Max.	A Diameter	B Width	C Shaft Length	D Shaft Diameter	E Shaft Detail	F Hub Length	G Hub Width	H Mounting Pattern Width	K Mounting Detail	L Encoder Shaft	Cord/Lead Length (in.)
24A-60P	24A4-60P1	4.5	7.083	2.42	3.57 Max.	1.56	.500 tapped end hole	Key	.125	1.5	90° on a ø2.000 BC	[4] #10-32 UNF-2B	No	24 Ref.
	24A4-60P2	5.0	7.693											
	24A4-60P3	5.5	8.303											
24A-60P Metric	24A4-60P1	2.0 kg	180 mm	61.5 mm	91 mm Max.	35 mm	14 mm h6	Key	3mm	40 mm h7	90° on a ø52 mm BC	[4] M5x0.8-6h	No	610 mm
	24A4-60P2	2.3 kg	195 mm											
	24A4-60P3	2.5 kg	211 mm											
22B-60P	22B4-60P1	5.1	7.04	2.39	2.39	1.56	.500 tapped end hole	Key	.118	1.5	90° on a ø2.000 BC	[4] #10-32 UNF-2B	Optional	24 Ref.
	22B4-60P2	5.7	7.65											
	22B4-60P3	6.2	8.26											
22B-60P Metric	22B4-60P1	2.3 kg	179 mm	60.71 mm	60.71 mm Max.	35 mm	14 mm h6	Key	3mm	40 mm h7	90° on a ø52 mm BC	[4] M5x0.8-6h	Optional	610 mm
	22B4-60P2	2.6 kg	194 mm											
	22B4-60P3	2.8 kg	210 mm											

D Parallel Shaft Gearmotor Dimensions

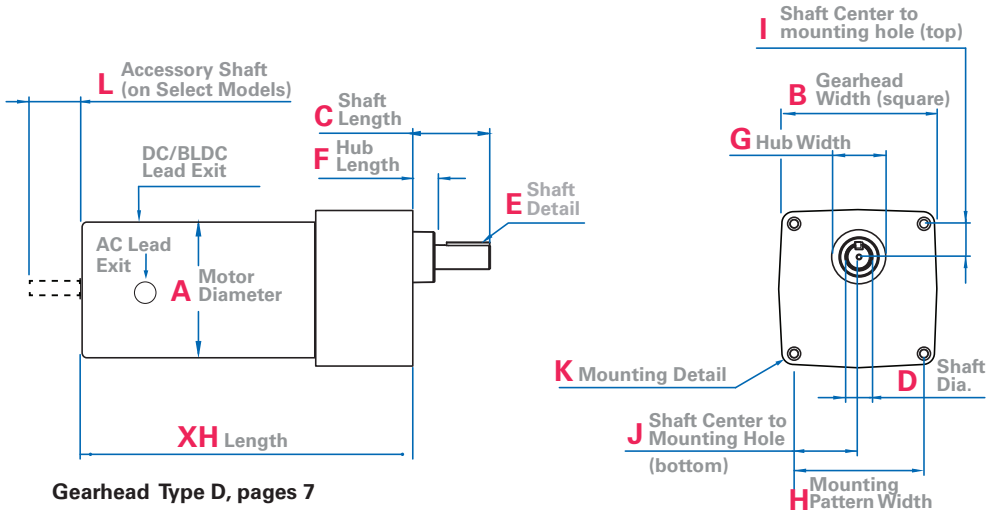

Gearhead Type D, pages 7

	Product Type	Wt. (lbs.)	XH Length	A Diameter (Height)	B Width	C Shaft Length	D Shaft Diameter	E Shaft Detail	F Hub Length	G Hub Width	H Mounting Pattern Width	I Shaft Center to Mounting Hole (top)	J Shaft Center to Mounting Hole (bottom)	K Mounting Detail	L Acc'y Shaft	Cord/ Lead Length (in.)
Type D Gearmotor																
24A-D	24A2-D	4.0	5.887	2.42	3.42	1.56	.500	Flat	.554	1.125	2.652	.582	1.326	[4]10-32 UNF-2B x .38 deep on a 3.75 B.C.	Yes	24
	24A4-D	4.5	6.637												Yes	24
22B-D	22B2-D	3.75	5.522	2.378											Yes	12 or 24

Only the first four characters of the product type are relevant to dimensions.

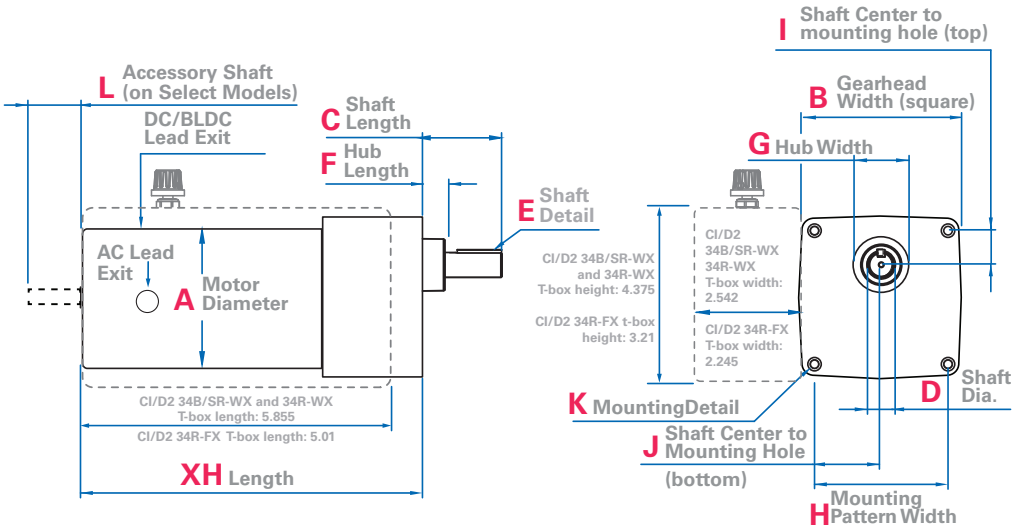

Gearhead Type Z, WX, FX pages 8-13

	Product Type	Wt. (lbs.)	XH Length	A Diameter (Height)	B Width	C Shaft Length	D Shaft Diameter	E Shaft Detail	F Hub Length	G Hub Width	H Mounting Pattern Width	I Shaft Center to Mounting Hole (top)	J Shaft Center to Mounting Hole (bottom)	K Mounting Detail	L Acc'y Shaft	Cord/ Lead Length (in.)
Type Z Gearmotor																
34R-Z	34R4-Z4/3	9.3	8.328	4.02	3.40	1.56	.500	Flat/ Key	.29	1.125	2.652	.582	1.326	[4]10-32 UNF-2B x .38 deep on a 3.75 B.C.	No	12
	34R6-Z4/3		8.345													
	34R4-Z2		7.428													
	34R6-Z2		7.445													
24A-Z	24A4-Z2	5.0	6.890	2.42											Yes	24
	24A4-Z3/Z4		7.790													
33A-Z	33A3-Z2	5.8	6.895	3.39												
	33A3-Z3	5.8	7.795													
	33A5-Z2	6.8	7.960													
	33A5-Z3	6.8	8.860													
22B-Z	22B3-Z2	5.25	6.326	2.378	3.42	1.56	.500	Flat/ Key	.29	1.125	2.652	.582	1.326	[4]10-32 UNF-2B x .46 deep on a 3.75 B.C.	Yes	12 or 24
	22B2-Z4	4.75	6.746												No	
	22B3-Z4	5.25	7.226												Yes	
Type WX Gearmotor																
34R-WX	34R4-WX	10.0	7.956	4.02	4.06	2.0	.625	Key	.56	1.31	3.375	.863	1.688	[4]1/4 -28 UNF-2B x .50 deep on a 4.78 B.C.	No	12
	34R6-WX	12.0	8.956	4.02												
33A-WX	33A5-WX	9.7	8.665	3.385											Yes	24
34B-WX	34B3-WX	4.8	6.473	4.02											Yes	12 or 24
Type E/F & FX Gearmotor																
34R-FX	34R4-FX	11.0	8.112	4.02	4.64	2.0	.750	Key	.37	1.536	3.625	.913	1.813	[4]1/4 -28 UNF-2B x .50 deep on a 5.13 B.C.	No	12
42R-FX	42R5-FX	14.5	9.128	4.73												
	42R6-FX	16.5	9.565													
48R-FX	48R6-FX	26.0	10.487	5.90											No	24
42A-FX	42A5-FX	14.9	9.323	4.26											Yes	24
34B-E/F	34B3-E	11.0	6.629	4.02											No	12 or 24
	34B4-E/F	12.0	7.129												Yes	
	34B6-F	14.0	8.129												Yes	
Type WX Gearmotor (Class I, Division 2)																
34B-WX	34R4-WX	10.0	7.303	4.02	4.06	2.0	.625	Key	.56	1.31	3.375	.863	1.688	4]1/4 -28 UNF-2B x .50 deep on a 4.78 B.C	No	—
34R-FX	34R4-FX	11.0	8.112	4.02	4.64	2.0	.750	Key	.37	1.536	3.625	.913	1.813	[4]1/4 -28 UNF-2B x .50 deep on a 5.13 B.C	No	—
	34R6-FX		9.112													
Type FX Gearmotor (Explosion-Proof Class I, Division 1)																
34R-FX	34R6-FX	21.0	11.617	4.78	4.66	2.00	.625	Key	—	—	3.380	—	—	[4]1/4-28 INF-2B x .625 deep	No	17.5
34B-FX	34B6-FX															

HG Parallel Shaft Gearmotor Dimensions

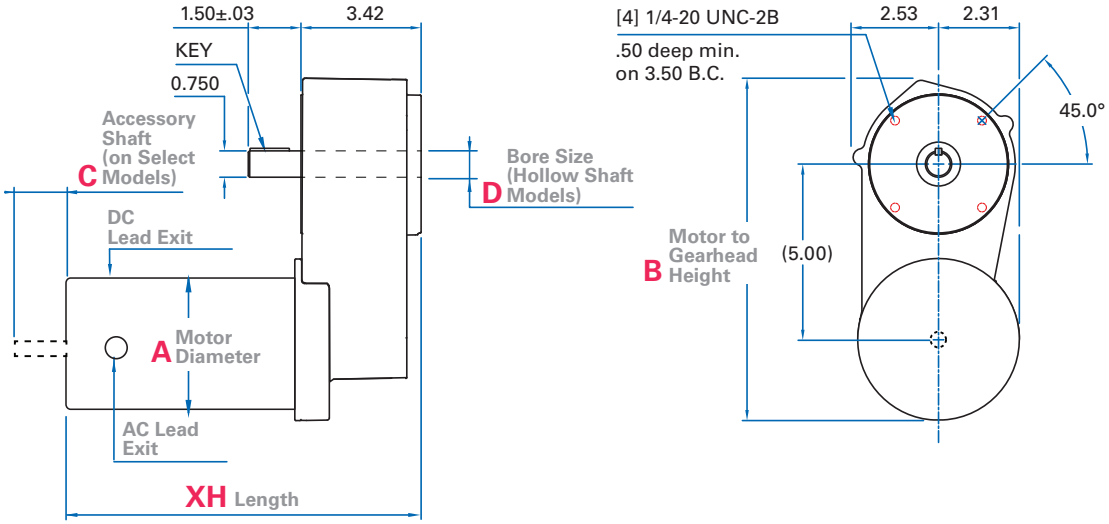

Gearhead Type HG and HG/H Hollow Shaft , page 14

	Product Type	Weight (lbs.)	XH Length	A Diameter	B Height	C Acc'y Shaft	D Bore Size	Lead/Cord Length (in.)
42R-HG	42R6-HG	9.5	9.855	4.73	9.85	No	—	12
42R-HG/H	42R6-HG						.75	
33A-HG	33A7-HG	10.5	10.547	3.39	9.80	Yes	—	24
33A-HG/H	33A7-HG		10.532			0964 Shaft Kit	.84	

Only the first four characters of the product type are relevant to dimensions

CG

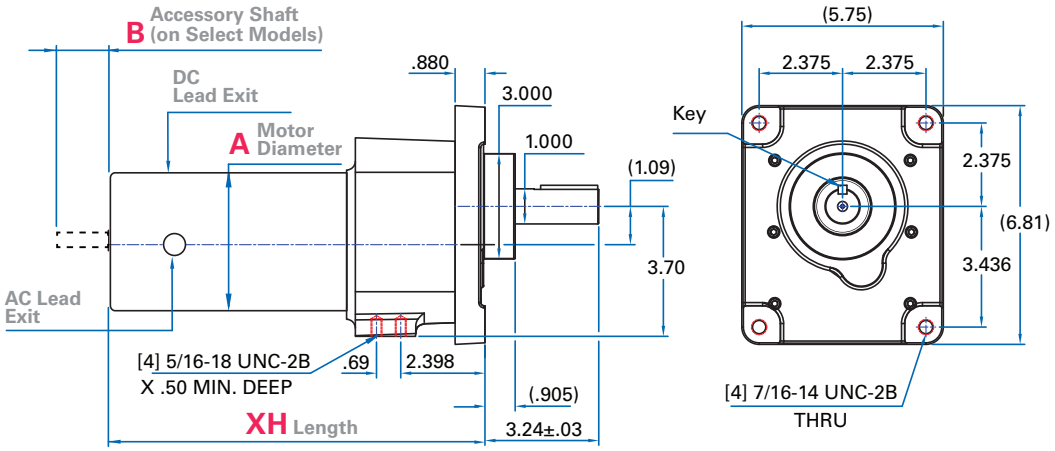

Gearhead Type CG, page 14

	Product Type	Weight (lbs.)	XH Length	A Diameter	B Acc'y Shaft	Lead/Cord Length (in.)
48R-CG	48R6-CG	34	12.849	5.917	No	12
42A-CG	42A7-CG	29	12.07	4.262	Yes	24

Only the first four characters of the product type are relevant to dimensions

D | K2-A/T Parallel Shaft Gearmotor Dimensions

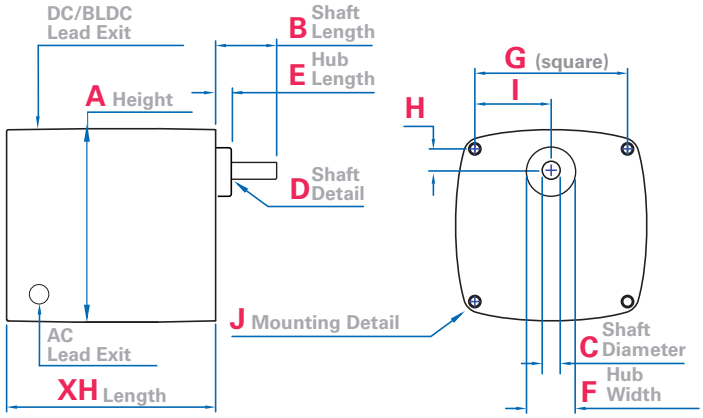

Gearhead Type 30R-D, K-2A/T, pages 20, 15

	Product Type	Wt. (lbs.)	XH Length (square)	A Height (square)	B Shaft Length	C Shaft Diameter	D Shaft Detail	E Hub Length	F Hub Width	G Mounting Pattern Width	H Shaft Center to Mounting Hole	I Shaft Center to Mounting Hole	J Mounting Detail	Lead/ Cord Length (in.)
Type K-2 Gearmotor														
K-2T	22	2.2	2.539	2.38	1.00	.250	Flat	.255	.52	1.900	.356	.950	[2]8-32 UNC-2A	12
	23	2.4	2.664											
	24	2.7	3.023											
K-2A	23	2.3	2.507	2.38	1.00	.250	Flat	.255	.52	1.900	.356	.950	[2]8-32 UNC-2A	12
	24	2.6	2.866											
Type 30R-D Gearmotor														
30R-D	30R1	5.8	5.242	3.45	1.56	.500	Flat	.554	1.125	2.652	.582	1.326	[4]10-32 UNF-2B x .38 deep Max.	12
	30R2	6.3	5.492											
	30R4	7.5	6.000											

3N | 3F Right Angle Gearmotor Dimensions

Dimensions (in inches) are for reference only. For CAD drawings and specs, visit **bodine-electric.com**.

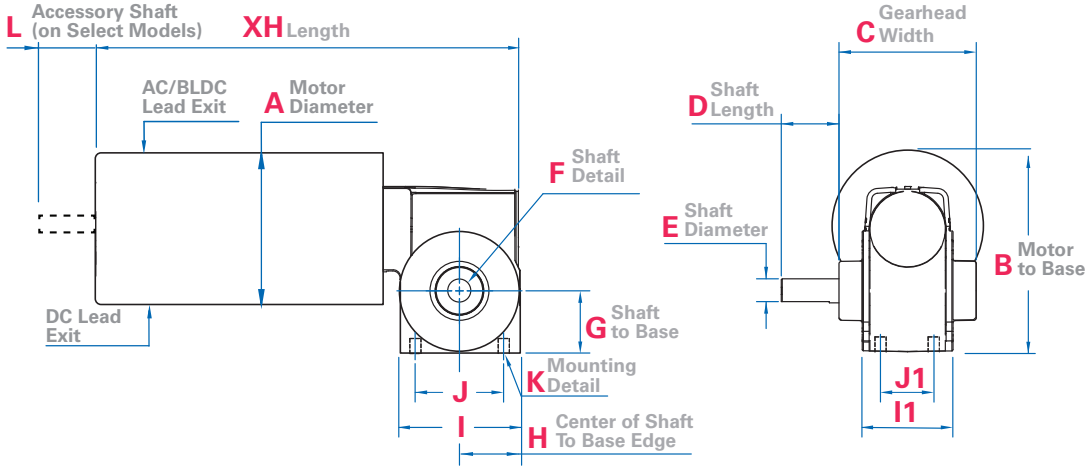

Gearhead Type 3N/3F, pages 16 (Mounts from Gearhead)

	Weight (lbs.)	XH Length	A Dia-meter	B Motor to Base	C Gearhead Width	D Shaft Length	E Shaft Diameter	F Shaft Detail	G Shaft to Base	H Center of Shaft to Base	I Base Length	I1 Base Width	J Mounting Hole Length	J1 Mounting Hole Width	K Mounting Detail	L Acc'y Shaft	Cord/ Lead Length (in.)
30R4-3N	7.5	7.192	3.34	4.30	2.871	1.00	.500	Flat	1.28	1.28	2.56	2.111	2.00	1.188	[4]1/4 -20 UNF-2B x .50 deep	No	12
34R4-3F	9.3	8.61	4.02	4.37												No	12
24A4-3F	5.3	7.422	2.42	3.57												Yes	24
22B4-3N	5.4	7.677	2.378	3.80												No	12 or 24

Only the first four characters of the product type are relevant to dimensions

3F | 5R | 5L Right Angle Gearmotor Dimensions

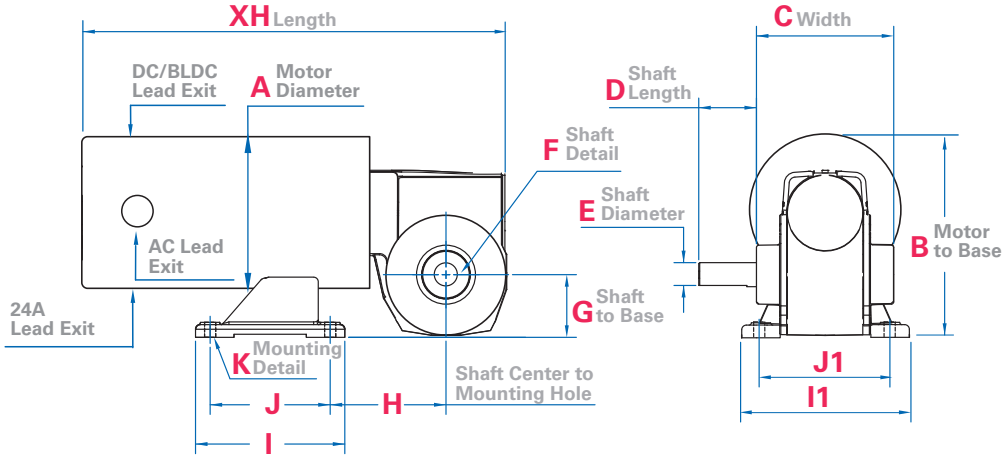

Gearhead Type 3F, 5R/5L, pages 16-18 (Mounts from Motor)

	Weight (lbs.)	XH Length	A Dia-meter	B Motor to Base	C Width	D Shaft Length	E Shaft Diameter	F Shaft Detail	G Shaft to Base	H Shaft Center To Mounting Hole	I Base Length	I1 Base Width	J Mounting Hole Length	J1 Mounting Hole Width	K Mounting Detail	Cord/ Lead Length (in.)
Type 3F Gearmotor																
24A4-3F	5.3	7.422	2.42	3.57	2.871	1.00	.500	Flat	1.28	3.14	2.50	3.62	1.25	2.94	[4] ø.28	24
Type 5R Gearmotor																
34R4-5R	11.5	9.206	4.02	5.24	3.568	1.50	.625	Key/ Flat	1.63	3.01	3.88	4.38	3.12	3.38	[4] ø.29	12
33A3-5R	9.0	8.651	3.39	4.92												24
Type 5L Gearmotor																
42R4-5L	13.5	9.54	4.73	5.57	3.568	1.50	.625	Key/ Flat	1.56	2.856	4.38	5.02	3.62	4.00	[4] ø.30	12
42A4-5L	14.1	9.635	4.26	5.54												24

5N | 5F | 5H

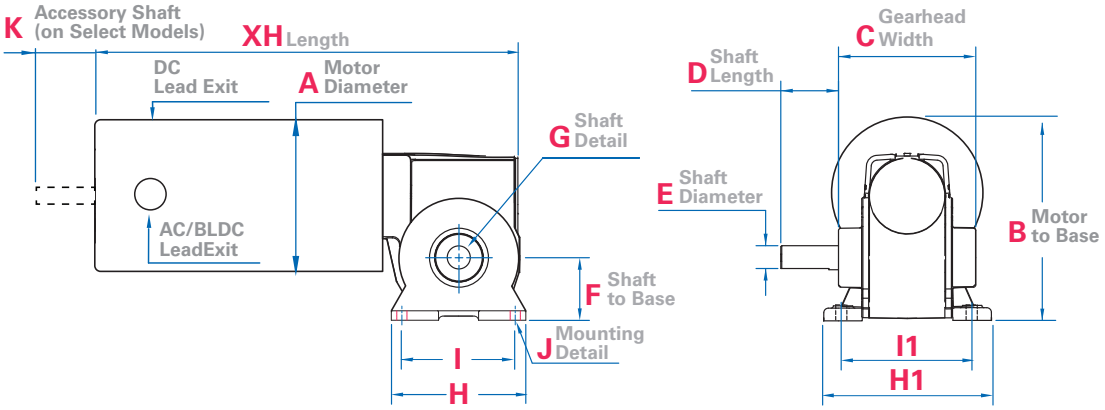

Gearmotor Type 5N, 5F, 5H, pages 18, 19, 20 (Mounts from Gearhead with Feet)

	Product Type	Wt. (lbs.)	XH Length	A Dia-meter	B Motor to Base	C Gearhead Width	D Shaft Length	E Shaft Diameter	F Shaft to Base	G Shaft Detail	H Base Length	H1 Base Width	I Mounting Hole Length	I1 Mounting Hole Width	J Mounting Detail	K Acc'y Shaft	Cord/ Lead Length (in.)
Type 5N Gearmotor																	
42R-5N	42R5-5N	15.5	10.103	4.73	5.64	3.568	1.50	.625	1.67	Key/Flat	3.56	3.81	3.00	3.25	[4]ø .271/.266 Holes	No	12
	42R6-5N	17.5	10.540														
42A-5N	42A5-5N	14.3	10.198	4.62	5.40											Yes	24
34B-5N	34B3-5N	9.0	7.723	4.02	5.26											No	12 or 24
	34B4-5N	10.0	8.223													Yes	
	34B6-5N	12.0	9.233													No	
Type 5F Gearmotor																	
34R-5F	34R6-5F	12.0	10.206	4.02	5.28	3.568	1.50	.625	1.67	Key/Flat	3.56	3.81	3.00	3.25	[4] ø.271/.266 Holes	No	12
33A-5F	33A5B-5F	9.9	9.711	3.39	4.96											No	24
	33A5F-5F	9.9	9.701													Yes	
Type 5H Gearmotor																	
48R-5H	48R6-5H	40.0	12.928	5.90	8.07	4.723	2.38	.750	3.000	Key	5.62	6.263	3.875	5.373	[4]ø.41/.44 Holes	No	12
42A-5H	42A7-5H	24.4	12.947	4.26	7.25											Yes	24

Only the first four characters of the product type are relevant to dimensions

3RD | GB Right Angle Gearmotor Dimensions

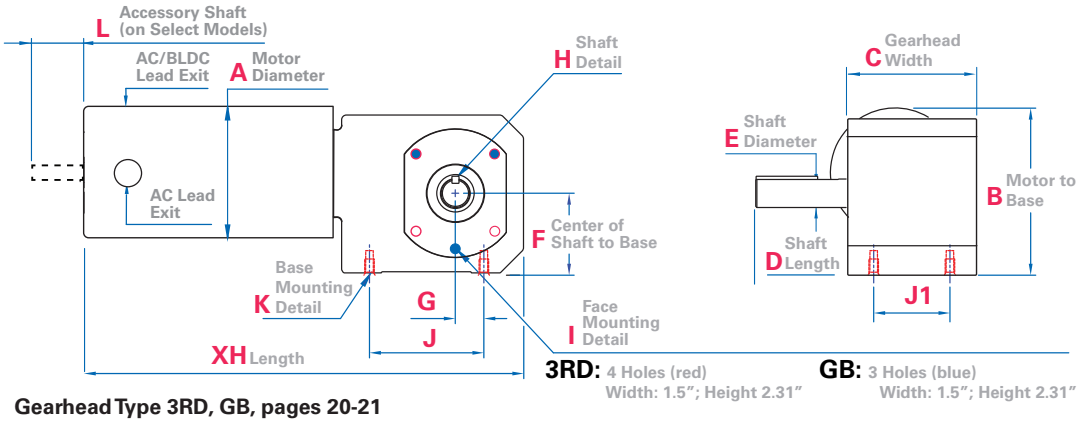

Gearhead Type 3RD, GB, pages 20-21

	Product Type	Wt. (lbs.)	XH Length	A Dia-meter	B Motor to Base	C Gear-head Width	D Shaft Length	E Shaft Diameter	F Shaft to Base	G Shaft to Mounting Hole Center	H Shaft Detail	I Face Mounting Detail	J Mounting Hole Length	J1 Mounting Hole Width	K Base Mounting Detail	L Acc'y Shaft	Cord/ Lead Length (in.
Type 3RD Gearmotor																	
30R-3RD	30R2	9.0	8.140	3.36	4.812	3.60	1.50	.500	1.562	.625	Flat	[4]10-32 UNF-2B x .31 Deep Min.	2.000	2.50	[4]1/4 -20 UNF-2B .31 deep	No	12
	30R4	10.5	8.640														
24A-3RD	24A2	9.0	8.07	2.42	4.147												24
	24A4	10.5	8.82														
22B-3RD	22B2	6.5	8.085	2.378	4.377												12 or 24
	22B4	6.5	9.045														
Type GB Gearmotor																	
42R-GB	42R5	17.5	11.458	4.73	5.06	3.335	2.38	.750	2.150	.75	Key	[3]5/16 -18 UNF-2B x .50 Deep Max. on 2.913 B.C.	3.00	2.00	[4]1/4 -20 UNF-2B .40 Deep Min.	No	12
	42R6	19.5	11.893														
33A-GB	33A5	13.6	11.067	3.39	4.38		2.38	.750							[4]1/4 -20 UNF-2B .40 Deep Min.	Yes	12
	33A7	14.9	12.268				2.362	.748							[4] M6 X 1-6H .45 Deep Max.	No	24
42A-GB	42A5	18.0	11.554	4.26	4.82		2.38	.750							[4]1/4 -20 UNF-2B .45 Deep Min.	Yes	24

3N/H | 3F/H Hollow Shaft Gearmotor Dimensions

Dimensions (in inches) are for reference only. For CAD drawings and specs, visit **bodine-electric.com**.

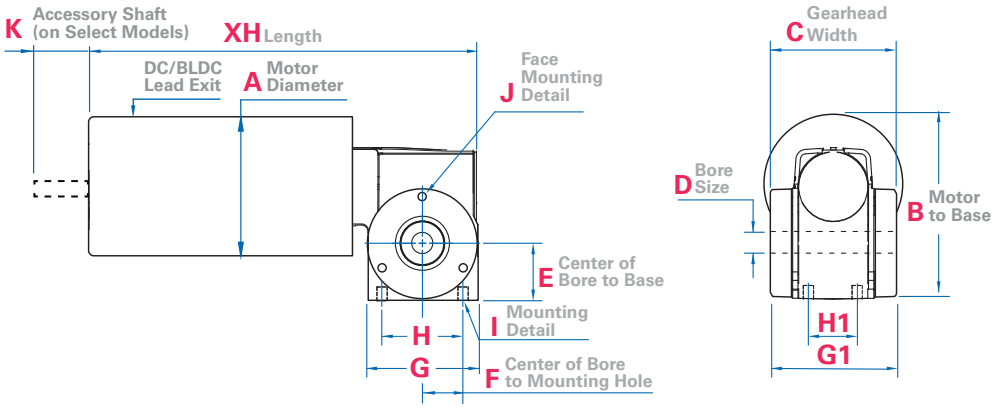

Gearhead Type 3N/H and 3F/H, page 16 (Mounts from Gearhead)

	Weight (lbs.)	XH Length	A Dia-meter	B Motor to Base	C Gearhead Width	D Bore Size	E Bore to Base	F Bore to Mtg. Hole	G Base Length	G1 Base Width	H Mounting Hole Length	H1 Mounting Hole Width	I Mounting Detail	J Face Mount Detail	K Acc'y Shaft	Cord/Lead Length (in.)
24A4-3F/H	5.3	7.422	2.42	3.57	3.085	.502	1.280	1.000	2.56	3.085	2.00	1.188	[4] 1/4 -20 UNF-2B x .50 Deep Max.	[3] 10-32 UNF-2B .35 Min. Deep on 2.125 B.C.	Yes	24
22B4-3F/H	5.4	7.677	2.378	3.80											No	12 or 24

Only the first four characters of the product type are relevant to dimensions

5L/H Hollow Shaft Gearmotor Dimensions

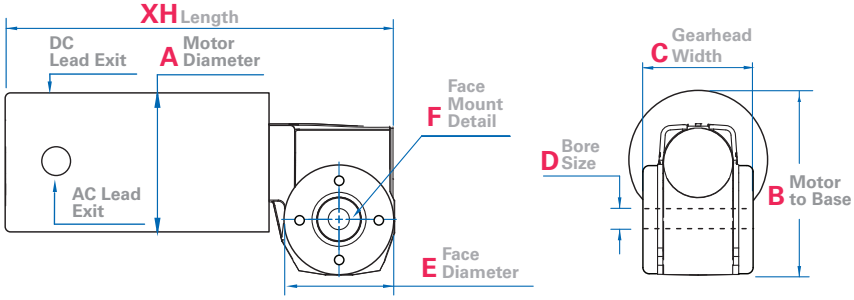

Gearhead Type 5L/H, pages 17-18 (Face Mount)

	Product Type	Weight (lbs.)	XH Length	A Diameter	B Motor to Base	C Gearhead Width	D Bore Size	E Face Diameter	F Face Mount Detail	Lead/Cord Length (in.)
33A-5L/H	33A5		9.711	3.39	5.04	2.740	.627	3.50	[4] 1/4-20 UNF-2B x .44 Min. Deep on 2.375 B.C.	24
42R-5L/H	42R6		10.540	4.73	5.71					None

25H2/30H3

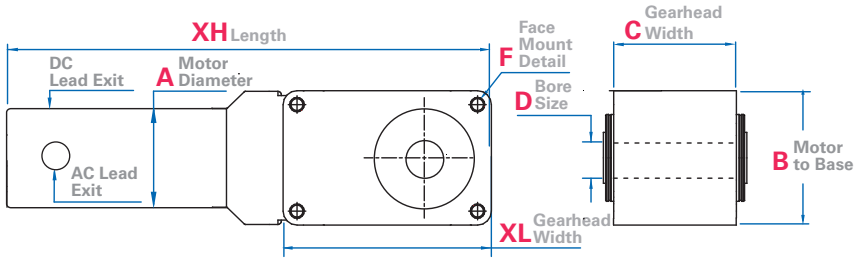

Gearhead Type 30H3 and 25H2, page 22 (Face Mount)

	Product Type	Weight (lbs.)	XH Length	XL Gearhead Length	A Diameter	B Motor to Base	C Gearhead Width	D Bore Size	F Face Mount Detail	Lead/Cord Length (in.)
33A-30H3	33A7	24	16.42	7.56	3.39	5.04	4.58	1.00	[4] M12x1.75-6H x 1.70 Deep.	26
33A-25H2	33A7	20	14.86	6.00	3.39	5.71		1.25		26

GB/H

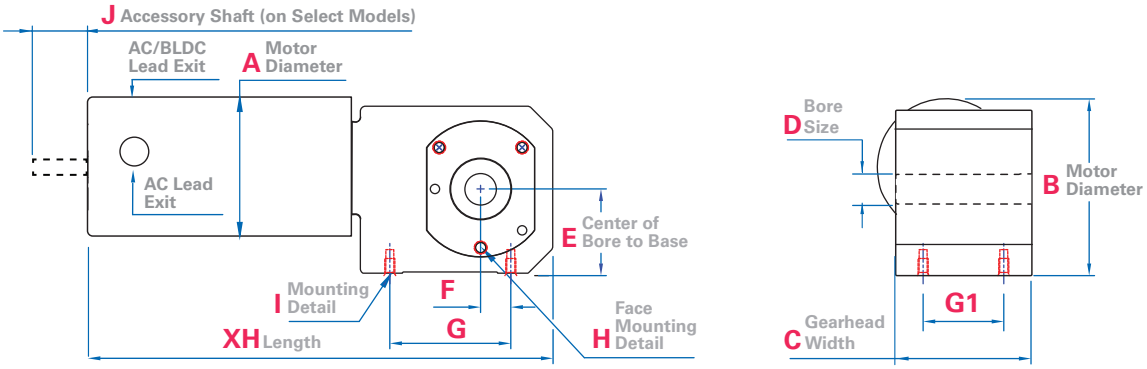

Type GB/H, page 21 (Face Mount)

	Product Type	Wt. (lbs.)	XH Length	A Dia-meter	B Motor to Base	C Gearhead Width	D Bore Size	E Bore to Base	F Center of Shaft to Mounting Hole	G Mounting Hole Length	G1 Mounting Hole Width	H Face Mounting Detail	I Mounting Detail	J Acc'y Shaft	Lead/Cord Length (in.)
42R-GB/H	42R5	17.5	11.456	4.73	5.06	3.335	.752	2.150	.75	3.00	2.00	[3] 5/16-18 UNF-2B x .44 Max. Deep on 2.913 B.C.	[4] 1/4-20 UNF-2B x .40 Min. Deep	No	12
	42R6	19.5	11.893												
33A-GB/H	33A5	13.6	11.067	3.39	4.38									No	24
42A-GB/H	42A5	19.5	11.554	4.26	4.82									Yes	24

Only the first four characters of the product type are relevant to dimensions

K2 | 30R | 34R/34B-Haz Loc Motor Dimensions

Dimensions (in inches) are for reference only. For CAD drawings and specs, visit **bodine-electric.com**.

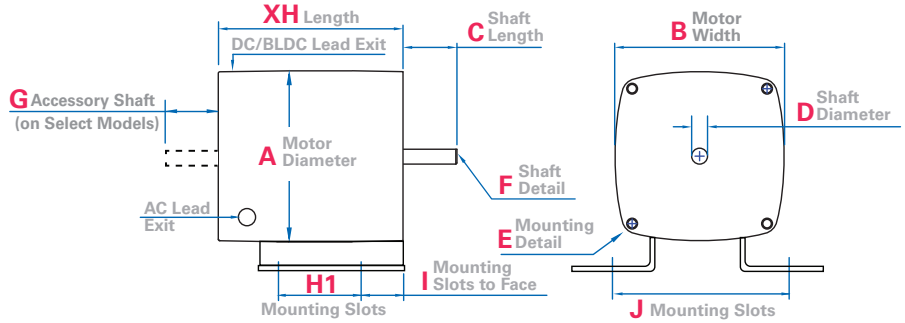

Motor Type K-2, 30R, 22B, Hazardous Location 34R and 34B pages 25 and 29

	Product Type	Weight (lbs.)	XH Length	A Diameter Square	B Width	C Shaft Length	D Shaft Diameter	E Mounting Detail	F Shaft Detail	G Acc'y Shaft	H Mount Slots	I Slot to Face	J Mount Slots	Lead/ Cord Length (in.)
K-2	K2-23	1.6	1.827	2.38	2.38	.62	.188	[4] 8-32 UNC-2B x .18 Deep Max. on 2.687 B.C.	Flat	No				12
	K2-24	1.9	2.20											
	K2-26	2.2	2.50											
K-2 Torque Motor	Model 0621	2.2	2.484											
30R	30R2	4.75	3.665	3.34	3.34	1.06	.313	[4]10-32 UNF-2B x .32 deep Max. on 3.75 B.C.	Flat	Yes				12
	30R4	6.2	4.200											
30R Torque Motor	Model 5625	4.75	3.665											
22B	22B2	2.5	3.610	2.378	2.378	.94	.375	[4] 8-32 UNC-2B x .35 Deep Max. on 2.625 B.C.	Flat	Yes				12 or 24
	22B4	3.5	4.570											
Explosion-Proof Class I, Division 1 Motors														
34R	34R6	19.0	4.78	4.	5.32	2.06	.625	[4] 3/8-16 UNC-2B on 5.875 B.C.	Key	No	2x 3.00	2x 2.56	2x 4.240	17.5
34B	34B6													

34R | 42R | 33A | 42A | 34B

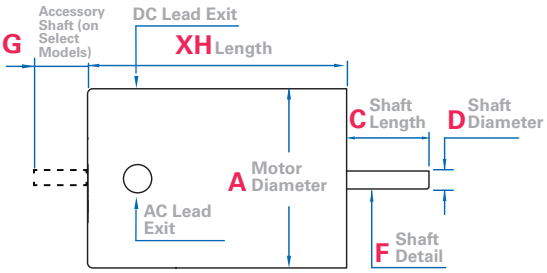

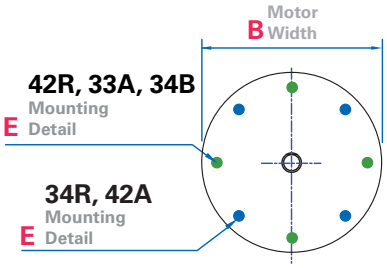

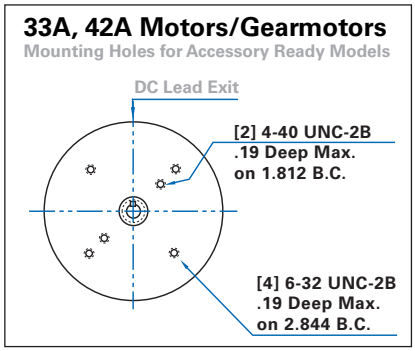

Motor Type 34R, 42R, 33A, 42A, 34B, pages 25, 27, 28 and 29 (Face Mount)

	Product Type	Weight (lbs.)	XH Length	A Diameter	B Width (PMDC)	C Shaft Length	D Shaft Diameter	E Mounting Detail	F Shaft Detail	G Acc'y Shaft	Lead/Cord Length (in.)
34R	34R4	7.0	5.69	4.02	—	1.25	.375	[4] 1/4-20 UNC-2B x .31 Min. Deep on 2.75 B.C.	Flat	No	12
	34R6	9.0	6.69								
42R	42R3	7.75	5.616	4.73	—	1.38	.375	[4] 1/4-20 UNC-2B x .31 Min. Deep on 3.75 B.C.	Flat	No	12
	42R5	11.0	6.679								
	42R6	13.0	7.116			1.125					
33A	33A3	5.1	5.140	3.39	3.75	1.48	.375	[4] 10-32 UNF-2B x .25 Min. Deep on 2.75 B.C.	Flat	Yes	24
	33A5	6.28	6.200	3.39	3.75	1.48	.500				
	33A7	7.45	7.401								
42A NEMA 42C	42A5	11.3	6.656	4.26	4.25	1.62	.500	[4] 1/4-20 UNC-2B x .31 Min. Deep on 3.75 B.C.	Flat	Yes	24
	42A7	14.5	7.781								
42A NEMA 42CZ	42A5	11.3	6.656			1.31			Flat/Key		
	42A7	14.5	7.781								
34B	34B3	6.0	4.043	4.02	—	1.625	.500	[4] 1/4-20 UNC-2B x .31 Min. Deep on 2.75 B.C.	Flat	Yes	12 or 24
	34B4	7.0	4.543								
	34B6	9.0	5.543								

Only the first four characters of the product type are relevant to dimensions

42R | 48R Motor Dimensions

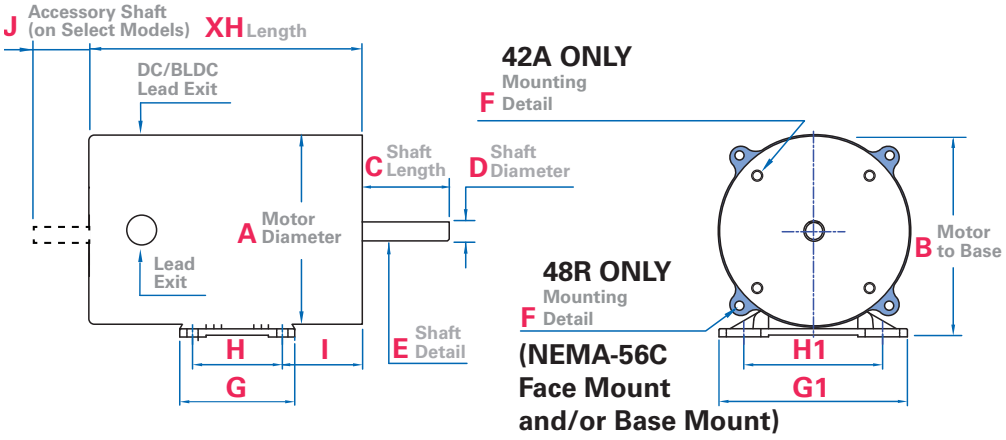

Motor Type 42R, 48R, 42A, pages 25, 27, 28 and 29 (Base Mount)

	Product Type	Weight (lbs.)	XH Length	A Diameter	B Motor to Base	C Shaft Length	D Shaft Diameter	E Shaft Detail	F Face Mount Detail	G Base Length	G1 Base Width	H Mtg. Hole Length	H1 Mtg. Hole Width	I Base Mtg. to Face	J Acc'y Shaft	Lead/ Cord Length (in.)
42R	42R3	7.8	5.616	4.73	4.999	1.38	.375	Flat	**Base mount 42R motors have no face mounting holes**	2.88	4.75	2.25	3.50	1.572	None	12
	42R5	11	6.679													
	42R6	13	7.116													
42R Torque Motor	Model 2628	12.5	6.201	4.62	4.93	1.31	.375	Flat	[4] 1/4-20 UNC-2B x .31 Max. Deep on 3.75 B.C.	2.88	4.75	2.25	3.50	1.569	1.56	12
48R	48R5	17.0	7.329	5.90	5.85	2.06	.625	Key	[4] 3/8-16 UNC-2B x .50 Max. Deep on 5.875 B.C.	3.50	5.75	2.75	4.25	1.446	None	12
	48R6	20.0	7.797													
48R Torque Motor	Model 0632	20.5	6.676	5.73	5.85	2.06	.625	Key	[4] 3/8-16 UNC-2B x .50 Max. Deep on 5.875 B.C.	3.50	5.75	2.75	4.25	1.446	2.00	12
42A	42A5	11.3	6.656	4.26	4.77	1.62	.500	Flat	[4] 1/4-20 UNC-2B x .31 Max. Deep on 3.75 B.C.	2.88	4.75	2.25	3.50	1.471	1.28	24
	42A7	14.5	7.781													

24A

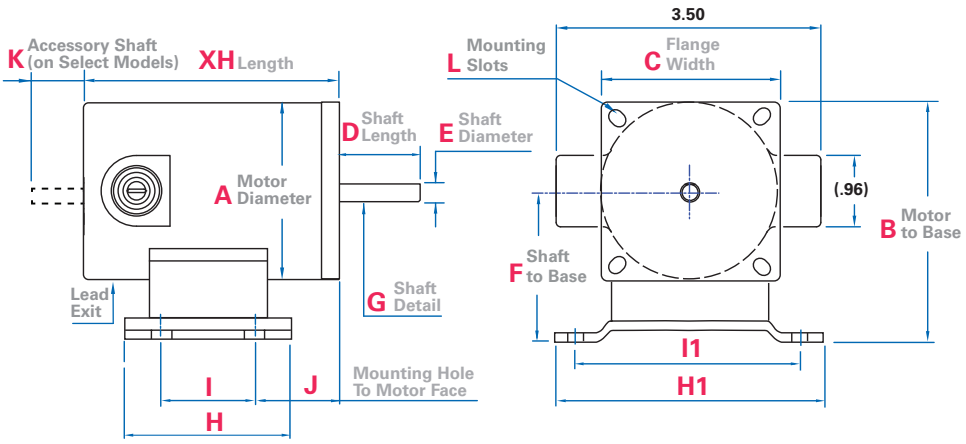

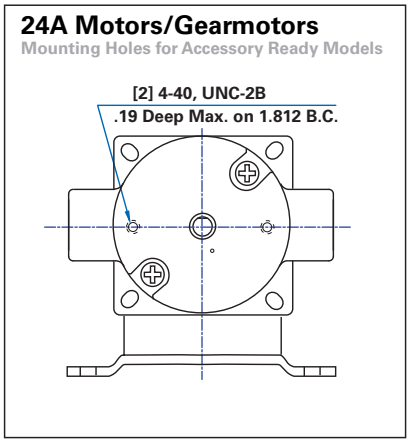

Motor Type 24A, page 28 (Base/Flange Mount)

	Product Type	Wt. (lbs.)	XH Length	A Dia-meter	B Motor to Base	C Flange Width	D Shaft Length	E Shaft Diameter	F Shaft to Base	G Shaft Detail	H Base Length	H1 Base Width	I Base Mounting Hole Length	I1 Base Mounting Hole Width	J Mounting Hole to Motor Face	K Acc'y Shaft	L Mounting Slots	Lead/ Cord Length (in.)
24A	24A0	2.0	3.240	2.42	3.185	2.41	.94	0.312	1.98	Flat	2.25	3.62	1.25	3.00	.625	Yes	0.181W x 0.257L on 2.764 B.C.	24
	24A2	2.5	3.870												1.62			
	24A4	3.0	4.620												1.81			

Only the first four characters of the product type are relevant to dimensions

Chassis Control Dimensions

Dimensions (in inches) are for reference only. For CAD drawings and specs, visit **bodine-electric.com**.

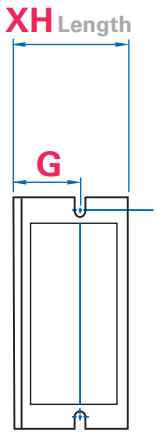

4 Mounting Slots

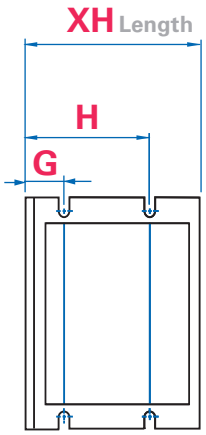

6 Mounting Slots

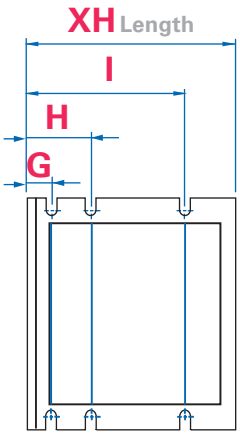

8 Mounting Slots

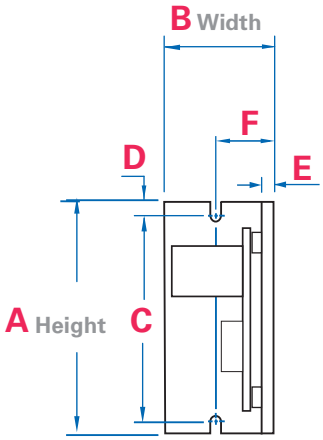

Side View

Chassis Models

	Model Number	Description	XH Length	A Height	B Width	C Slot Height	D Slot Center to Edge	E Heat Sink Thickness	F Side Slot to Edge	G Slot 1 to Edge	H Slot 2 to Edge	I Slot 3 to Edge
AC Inverter	2982, 2983, 2984	8 mounting slots	3.87	4.30	2.66	3.80	.25	—	.950	.485	1.235	2.985
	2987	6 mounting slots-no side slots	4.30	4.67	4.96	—	—					
(DC) WPM	see website	6 mounting slots	3.64	4.30	1.75	3.80	.25	.90	.95	.50	3.00	—
(DC) UPM	see website		3.64	4.30	1.50	3.80	.25	.90	.95	.50	3.00	—
(DC) FPM	0810		4.75	6.00	1.25	5.50	.25	—	.94	1.13	3.63	—
(DC) FPM	0830, 0850		5.00	9.25	2.14	8.25	.38	—	—	1.31	3.81	—
(BLDC) ABL	3904, 3905, 3907	4 mounting slots	3.90	8.00	2.25	7.50	.25	.188	1.283	2.25	—	—
Low Voltage	3908, 3909	6 mounting slots	3.25	5.25	1.30	5.05	.10	.125	.65	.75	2.75	—

Enclosed Control Dimensions

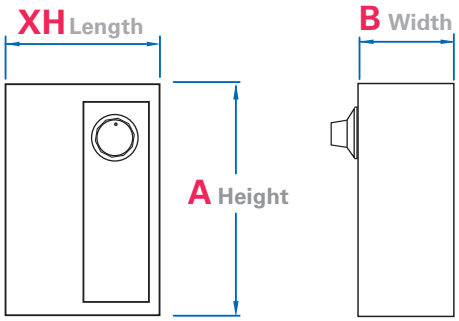

Enclosed Models

	Model Number	Description	XH Length	A Height	B Width
NEMA 4X/1P-65	2999	AC Inverter	5.51	9.53	5.97
NEMA 1/1P-40	2998	AC Inverter	4.95	7.00	4.15
NEMA 1	2996	AC Inverter	7.116	4.96	5.672
NEMA 1	0790, 0791, 0794	DC	7.12	3.92	3.74
NEMA 12	see website	DC/BLDC	6.16	8.44	3.94

Standard products for demanding applications





New SCR rated 90V & 180VDC Gearmotors

With maximum rated armature speed of 2500 rpm, Bodine SCR rated gearmotors provide reliable performance, adjustable speed, and quiet operation. Parallel shaft and right angle gearmotors are available. These stock models can replace 90V or 180VDC gearmotors sold by Baldor, Bison Gear, Leeson, or Grainger.

Variable Speed AC Inverter-Duty 3-Phase Gearmotors

Get maintenance-free performance with our Inverter-Duty, three-phase gearmotors. Designed to drive demanding applications like conveyor systems, food processing equipment, medical equipment and factory automation. Parallel shaft, hollow shaft and right-angle gearmotors are rated from 1/25-3/4HP, with gear ratios from 5:1 to 3600:1, and rated torque up to 1000 lb-in (113 Nm). Dual voltage (230/460 VAC) stock models are available.

BODINE ELECTRIC COMPANY

bodine-electric.com

201 Northfield Road
Northfield, IL 60093 U.S.A.
Tel: 773.478.3515
www.bodine-electric.com
info@bodine-electric.com

Presented by:

ISO 9001

RoHS COMPLIANT

c UL us

07481101.G7 © Copyright 2022 Bodine Electric Company. All rights reserved.