Valve Concepts, Inc.

VAPOR CONTROL
PRODUCTS

www.cashco.com
Innovative Solutions

Get Consistent Quality

By involving every employee in our ISO 9001:2008 Quality Assurance Program, you can count on the quality we provide you. We have coordinated our business systems, invested in state-of-the-art machine tools, and built an extensive component inventory so we can consistently provide cost-effective solutions and on-time delivery to meet your replacement or project requirements — regardless of size or complexity.

Make the Right Choice

"We simply make it right" by putting your needs first. The next time you specify control valves, regulators or vapor control emission systems, or you need a replacement fast...call the supplier that makes it right. Rely on Cashco for your single-source convenience. Great service, field-proven quality, and timely delivery makes Cashco the right choice.

Select Control Valves & Regulators

FOR SPECIALIZED OR UTILITY SERVICE

We manufacture a broad line of throttling rotary and linear control valves, pressure reducing regulators, and back pressure regulators in line sizes from 1⁄4 inch to 10 inches and Cv ranges from .002 to 4,406. Models are available to handle slurries, cryogenic service, and corrosive fluids; to withstand high temperatures and pressures; and to maximize the reduction of fugitive emissions. Contact Cashco for complete product information.

WE ARE CASHCO

The Strength Of Our Organization Is Our Employees

COMMITMENT. QUALITY. DEDICATION.

Cashco, Inc. is a manufacturing enterprise, centrally located within the United States. Our employees use hard work, commitment, and passion to define company goals that deliver world-class products at a fair price.

At Cashco, we continue to innovate our products until they are recognized as best in class within their respective industry. If the customer is not satisfied, we take it upon ourselves to make it right. Cashco employees are the bloodline of our company elevating products above industry standards for performance, dependability, and safety.

At Cashco, the strength of our organization is our employees.

TABLE OF CONTENTS

Vapor Control Systems

Weight Loaded Relief Vents
- Model 3100 4
- Model 3200 5
- Model 3300 6
- Model 3400 7
- Model 3500 8
- Model 3600 9

Spring Loaded Relief Vents
- Model 4100 10
- Model 4200 11
- Model 4300 12
- Model 4400 13
- Model 4500 14
- Model 4600 15

Pilot Operated Relief Vents
- Model 5100 16
- Model 5200 17
- Model 5400 18
- Model 5500 19
- Model 1049 20

Blanketing Valves
- Model 1078 21
- Model 1088 22

Sanitary Vent
- Model 1100 23

Emergency Relief Vents
- Model 8700 24
- Model 3700 25
- Model 8910 26
- Model 8920 27
- Model 8930 28
- Model 8940 29

Hatches/Manifolds
- Model 2100 30
- Model 2199 31
- Model 2049 32

MODEL // **3100**

The Model 3100 end-of-line conservation breather vent is designed for use on atmospheric and low-pressure storage tanks where pressure and vacuum relief is required. The Model 3100 can easily be field converted to a vacuum only vent, a pressure/vacuum vent with pipe away and can either be direct acting or pilot operated. This allows facilities to upgrade to meet ever changing EPA standards.

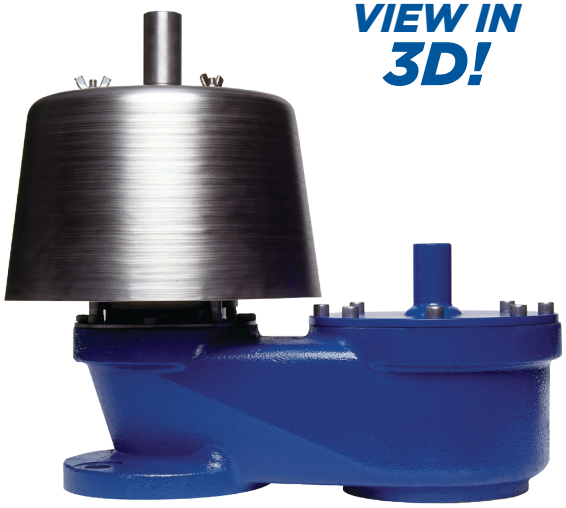

LINE SIZES AVAILABLE

- 2" (DN50)
- 3" (DN80)
- 4" (DN100)
- 6" (DN150)
- 8" (DN200)
- 10" (DN250)
- 12" (DN300)

END CONNECTIONS

FLANGED

COMMON APPLICATIONS

ATMOSPHERIC & LOW-PRESSURE STORAGE TANKS

DESIGN PRESSURE

MULTIPLE SET PRESSURE & VACUUM RANGES AVAILABLE

MATERIALS:

Housing – Aluminum, CS, 316 SST, 304 SST, FRP with Derakane 470 or Hetron 800
Seat Rings – Aluminum, 304 SST, 316 SST
Pallet Diaphragms – FEP, FKM, EPDM, Buna-N

TEMPERATURE RANGE:

-400°F to +400°F (-240°C to +204°C)

MODEL // **3200**

The Model 3200 is a weight-loaded, in-line conservation breather vent designed for use on atmospheric and low-pressure storage tanks where pressure and vacuum relief is required. The Model 3200 can easily be field converted to a vacuum only vent, a pressure/vacuum vent to atmosphere and can either be direct acting or pilot operated. This allows facilities to upgrade to meet ever changing EPA standards.

VIEW IN 3D!

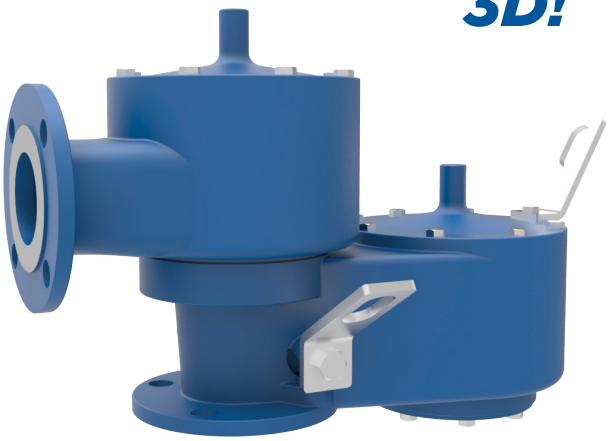

LINE SIZES AVAILABLE

2" x 2" (DN50 x DN50)	2" x 3" (DN50 x DN80)	3" x 3" (DN80 x DN80)	3" x 4" (DN80 x DN100)
4" x 4" (DN100 x DN100)	4" x 6" (DN100 x DN150)	6" x 6" (DN150 x DN150)	6" x 8" (DN150 x DN200)
8" x 10" (DN200 x DN200)	10" x 12" (DN250 x DN300)	12" x 14" (DN300 x DN350)	

END CONNECTIONS

FLANGED

COMMON APPLICATIONS

ATMOSPHERIC & LOW-PRESSURE STORAGE TANKS

DESIGN PRESSURE

MULTIPLE SET PRESSURE & VACUUM RANGES AVAILABLE

MATERIALS:

Housing – Aluminum, CS, 316 SST, 304 SST, FRP
Seat Rings – Aluminum, 304 SST, 316 SST
Pallet Diaphragms – FEP, FKM, EPDM, Buna-N

TEMPERATURE RANGE:

-400°F to +400°F (-240°C to +204°C)

SEAT LEAKAGE:

Meets or exceeds API Standard 2000

MODEL // **3300**

The Model 3300 vacuum relief vent is weight loaded and intended for use on storage tanks, vapor recovery systems and process systems where vacuum relief is required. The 3300 can be easily be field converted to an end-of-line pressure/vacuum relief vent with the addition of weather hood components or an in-line pressure/vacuum relief with the addition of pipe away body components. This allows facilities to upgrade their equipment to meet both plant requirements and ever changing EPA standards.

VIEW IN 3D!

LINE SIZES AVAILABLE

- 2" (DN50)
- 3" (DN80)
- 4" (DN100)
- 6" (DN150)
- 8" (DN200)
- 10" (DN250)
- 12" (DN300)

END CONNECTIONS

FLANGED

COMMON APPLICATIONS

STORAGE TANKS, VAPOR RECOVERY SYSTEMS, PROCESS SYSTEMS WHERE VACUUM RELIEF IS REQUIRED

DESIGN PRESSURE

MULTIPLE SET VACUUM RANGES AVAILABLE

MATERIALS:

Housing – Aluminum, CS, 316 SST, 304 SST, FRP
Seat Rings – Aluminum, 304 SST, 316 SST
Pallet Diaphragms – FEP, FKM, EPDM, Buna-N

TEMPERATURE RANGE:

-325°F to +400°F (-198°C to +204°C)

SEAT LEAKAGE:

MEETS OR EXCEEDS CURRENT EDITION OF API STANDARD 2000

MODEL // **3400**

The Model 3400 pressure vents are designed for use on atmospheric and low-pressure storage tanks where pressure relief is required. The 3400 is a weight loaded style. Under normal operating conditions, the pallet assembly is closed providing a vapor-tight seal. In the event the tank pressure increases to the set point of the Model 3400, the pallet lifts to vent excess vapors thereby protecting tank from dangerous over-pressurization. Pallet automatically closes and reseals when the pressure is reduced.

VIEW IN 3D!

LINE SIZES AVAILABLE

2” (DN50)	3” (DN80)	4” (DN100)	6” (DN150)	8” (DN200)	10” (DN250)
12” (DN300)	16” (DN400)	18” (DN450)	20” (DN500)	24” (DN600)	

END CONNECTIONS

FLANGED

COMMON APPLICATIONS

ATMOSPHERIC & LOW-PRESSURE STORAGE TANKS

DESIGN PRESSURE

MULTIPLE SET PRESSURE RANGES AVAILABLE

MATERIALS:

Flange & Weather Hood – Aluminum, CS, SST, Corrosion Resistance Fiberglass
Trim – Aluminum, 316 SST, Fiberglass
Pallet Diaphragm – FEP TFE, FKM, EPDM, Buna-N

TEMPERATURE RANGE:

-400°F to +400°F (-240°C to +204°C)

SEAT LEAKAGE:

Meets or exceeds API Standard 2000

MODEL // **3500**

VIEW IN 3D!

The Model 3500 are pressure vents designed to vent the tank vapor away to a header system. The 3500 is weight loaded. One of the key features to the design is that it can be retrofitted in the field to become a 5500 series. If vacuum vent is required, it can also be upgraded to a 3200, 4200 or a 5200 series unit (this does not include FRP bodies). This allows facilities to upgrade to meet tank requirements and ever changing EPA standards. The 3500 can also be used as a side mounted vacuum vent with inlet flange.

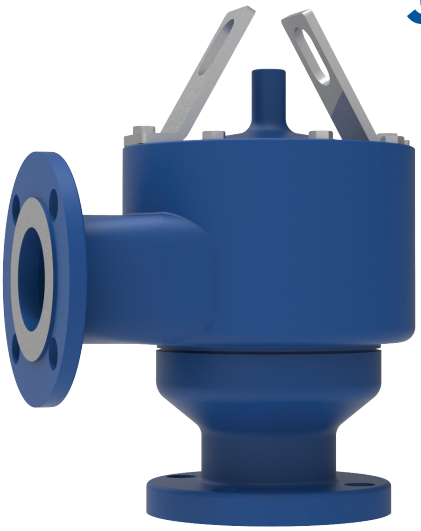

LINE SIZES AVAILABLE

- 2" (DN50)
- 3" (DN80)
- 4" (DN100)
- 6" (DN150)
- 8" (DN200)
- 10" (DN250)
- 12" (DN300)

END CONNECTIONS

FLANGED

COMMON APPLICATIONS

ATMOSPHERIC & LOW PRESSURE STORAGE TANKS WHERE PRESSURE RELIEF IS REQUIRED

DESIGN PRESSURE

MULTIPLE SET PRESSURE RANGES AVAILABLE

MATERIALS:

Body – Aluminum, CS, 316 SST, Derakane 470, Hetron 800
Diaphragm – FEP, Buna-N, EPDM, FKM
Seat – Aluminum, 316 SST, Derakane 470, Hetron 800

TEMPERATURE RANGE:

-400°F to +400°F (-240°C to +204°C)

SEAT LEAKAGE:

MEETS OR EXCEEDS CURRENT EDITION OF API STANDARD 2000

MODEL // **3600**

VIEW IN 3D!

The Model 3600 is a vacuum vent designed to allow atmospheric air into the tank to reduce the vacuum pressure in the tank. The 3600 is a weight loaded style. One of the key features to the design is that it can be retrofitted in the field to become a 3200, 4200 or a 5200 series unit if additional venting is required in the future (this does not include FRP bodies). This allows facilities to upgrade their equipment to meet both plant requirements and ever changing EPA standards.

LINE SIZES AVAILABLE

- 2" (DN50)
- 3" (DN80)
- 4" (DN100)
- 6" (DN150)
- 8" (DN200)
- 10" (DN250)
- 12" (DN300)

END CONNECTIONS

- FLANGED

COMMON APPLICATIONS

STORAGE TANKS, VAPOR RECOVERY SYSTEMS, PROCESS SYSTEMS WHERE VACUUM RELIEF IS REQUIRED

DESIGN PRESSURE

MULTIPLE SET VACUUM RANGES AVAILABLE

MATERIALS:

Body – Aluminum, CS, 316 SST, 304 SST, Derakane 470, Hetron 800

Seal – FEP, Buna-N, EPDM, FKM

Seat – Aluminum, 316 SST, 304 SST, Derakane 470, Hetron 800

TEMPERATURE RANGE:

-400°F to +400°F (-240°C to +204°C)

SEAT LEAKAGE:

MEETS OR EXCEEDS CURRENT EDITION OF API STANDARD 2000

MODEL // **4100**

The Model 4100 is a pressure/vacuum vent designed to vent the tank vapor away to atmosphere and relieve vacuum pressure within the tank. The 4100 incorporates a sping loaded design. One of the key features to the design is it can be retrofitted in the field to become a 3200, 4200, 5100 or a 5200 series unit (this does not include FRP Bodies). This allows facilities to upgrade to meet ever changing EPA standards (FRP not available on 4000 Series).

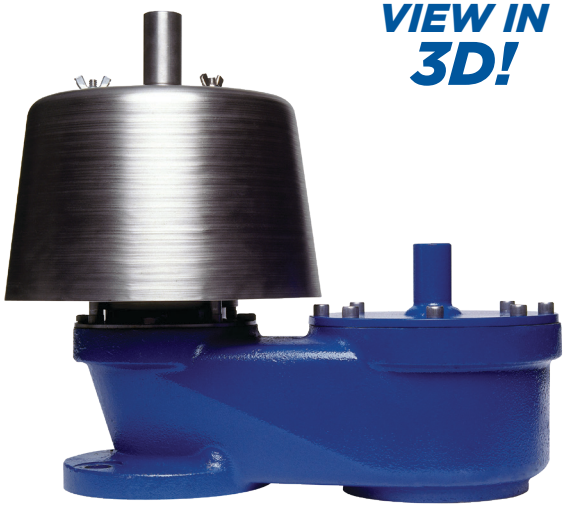

LINE SIZES AVAILABLE

- 2" (DN50)
- 3" (DN80)
- 4" (DN100)
- 6" (DN150)

END CONNECTIONS

- FLANGED

COMMON APPLICATIONS

WHERE HIGHER PRESSURE SETTINGS ARE REQUIRED

DESIGN PRESSURE

MULTIPLE SET PRESSURE & VACUUM RANGES AVAILABLE

MATERIALS:

Body/Trim/Weather Hood – ALUM/SST/SST, CS/SST/CS, SST/SST/SST

Diaphragm – FEP TFE, Buna-N, EPDM, FKM

TEMPERATURE RANGE:

-400°F to +400°F (-240°C to +204°C)

MODEL // **4200**

VIEW IN 3D!

The Model 4200 is a pressure/vacuum vent designed to vent the tank vapor away to a header system and to relieve vacuum pressure within the tank. The 4200 incorporates a spring loaded design. One of the key features to the design is it can be retrofitted in the field to become a 5100 or a 5200 series unit (this does not include FRP bodies). This allows facilities to upgrade and meet ever changing EPA standards (FRP not available on 4000 Series).

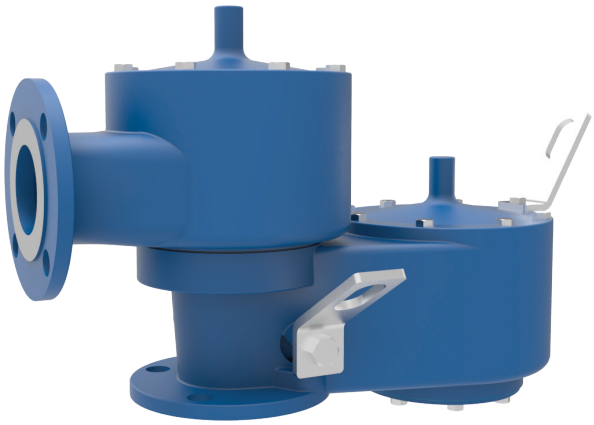

LINE SIZES AVAILABLE

- 2" (DN50)
- 3" (DN80)
- 4" (DN100)
- 6" (DN150)

END CONNECTIONS

- FLANGED

COMMON APPLICATIONS

WHERE HIGHER PRESSURE SETTINGS ARE REQUIRED

DESIGN PRESSURE

MULTIPLE SET PRESSURE & VACUUM RANGES AVAILABLE

MATERIALS:

Body/Trim – ALUM/SST, CS/SST, SST/SST

Diaphragm – FEP TFE, Buna-N, EPDM, FKM

TEMPERATURE RANGE:

-400°F to +400°F (-240°C to +204°C)

MODEL // **4300**

The Model 4300 is a vacuum vent designed to allow atmospheric air into the tank to reduce the vacuum pressure in the tank. The 4300 incorporates a spring loaded design. One of the key features to the design is it can be retrofitted in the field to become a 3100, 3200, 4100, 4200, 5100 or 5200 series unit if additional venting is required in the future (this does not include FRP bodies). This allows facilities to upgrade their equipment to meet both plant requirements and ever changing EPA standards (FRP not available on 4000 Series).

VIEW IN 3D!

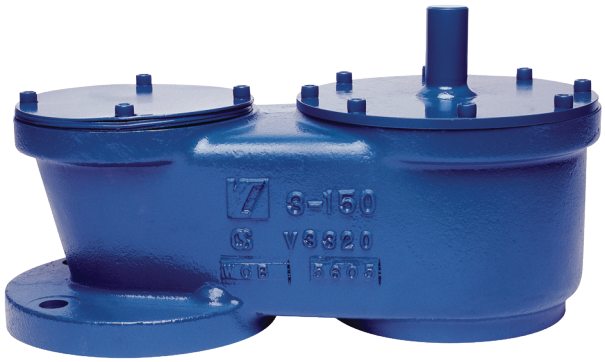

LINE SIZES AVAILABLE

- 2" (DN50)
- 3" (DN80)
- 4" (DN100)
- 6" (DN150)

END CONNECTIONS

- FLANGED

COMMON APPLICATIONS

STORAGE TANKS, VAPOR RECOVERY SYSTEMS, PROCESS SYSTEMS WHERE VACUUM RELIEF IS REQUIRED

DESIGN PRESSURE

MULTIPLE SET VACUUM RANGES AVAILABLE

MATERIALS:

Body/Trim – ALUM/SST, CS/SST, SST/SST

Diaphragm – FEP TFE, Buna-N, EPDM, FKM

TEMPERATURE RANGE:

-400°F to +400°F (-240°C to +204°C)

MODEL // **4400**

The Model 4400 is a pressure vent designed to vent the tank vapor away to atmosphere. The 4400 incorporates a spring loaded design (FRP not available on 4000 Series).

VIEW IN 3D!

LINE SIZES AVAILABLE

- 2" (DN50)
- 3" (DN80)
- 4" (DN100)
- 6" (DN150)

END CONNECTIONS

- FLANGED

COMMON APPLICATIONS

APPLICATIONS FOR NORMAL OR EMERGENCY VENTING PRESSURE RELIEF

DESIGN PRESSURE

MULTIPLE SET PRESSURE RANGES AVAILABLE

MATERIALS:

Housing – CS, 316 SST, Aluminum

Pallet – 316 SST

TEMPERATURE RANGE:

-400°F to +400°F (-240°C to +204°C)

MODEL // **4500**

VIEW IN 3D!

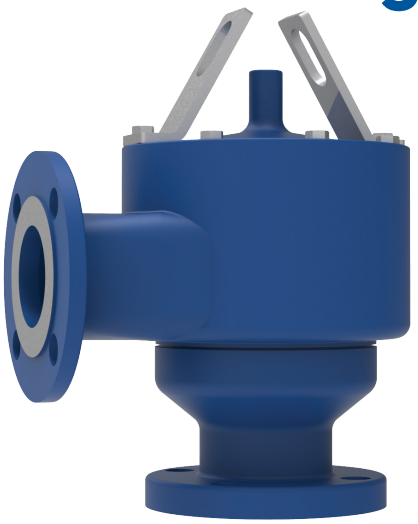

The Model 4500 is a pressure vent designed to vent the tank vapor away to a header system. The 4500 incorporates a spring loaded design. One of the key features to the design is that it can be retrofitted in the field to become a 5500 series. If vacuum vent is required, it can also be upgraded to a 3200, 4200 or a 5200 series unit (this does not include FRP Bodies). This allows facilities to upgrade to meet tank requirements and ever changing EPA standards. The 4500 can also be used as a side mounted vacuum vent with inlet flange (FRP not available on 4000 Series).

LINE SIZES AVAILABLE

- 2" (DN50)
- 3" (DN80)
- 4" (DN100)
- 6" (DN150)

END CONNECTIONS

- FLANGED

COMMON APPLICATIONS

WHERE PRESSURE RELIEF IS REQUIRED AND RELIEVING VAPORS MUST BE PIPED AWAY.

DESIGN PRESSURE

MULTIPLE SET PRESSURE RANGES AVAILABLE

MATERIALS:

Housing – CS, 316 SST, Aluminum

Pallet – 316 SST

TEMPERATURE RANGE:

-400°F to +400°F (-240°C to +204°C)

MODEL // **4600**

VIEW IN 3D!

The Model 4600 is a side mounted vacuum vent designed to allow atmospheric air into the tank to reduce the vacuum pressure in the tank. The 4600 incorporates a spring loaded design. One of the key features to the design is that it can be retrofitted in the field to become a 3200, 4200 or a 5200 series unit if additional venting is required in the future (this does not include FRP bodies). This allows facilities to upgrade their equipment to meet both plant requirements and ever changing EPA standards (FRP not available on 4000 Series).

LINE SIZES AVAILABLE

- 2" (DN50)
- 3" (DN80)
- 4" (DN100)
- 6" (DN150)

END CONNECTIONS

- FLANGED

COMMON APPLICATIONS

STORAGE TANKS, VAPOR RECOVERY SYSTEMS, PROCESS SYSTEMS WHERE VACUUM RELIEF IS REQUIRED

DESIGN PRESSURE

MULTIPLE SET VACUUM RANGES AVAILABLE

MATERIALS:

Housing – CS, 316 SST, Aluminum

Pallet – 316 SST

TEMPERATURE RANGE:

-400°F to +400°F (-240°C to +204°C)

MODEL // **5100**

The Model 5100 is a low pressure/vacuum vent designed to vent the tank vapor away to atmosphere and to relieve vacuum pressure within the tank. The 5100 is a pilot operated design. The precision of the pilot feature allows tight seat leakage closer to set point and full flow with less overpressure.

VIEW IN 3D!

LINE SIZES AVAILABLE

- 2" (DN50)
- 3" (DN80)
- 4" (DN100)
- 6" (DN150)
- 8" (DN200)
- 10" (DN250)
- 12" (DN300)

END CONNECTIONS

FLANGED

COMMON APPLICATIONS

ATMOSPHERIC & LOW-PRESSURE TANKS

DESIGN PRESSURE

MULTIPLE SET PRESSURE & VACUUM RANGES AVAILABLE

MATERIALS:

Housing – CS, 316 SST, Aluminum

Trim – 316 SST, Aluminum

Diaphragm Cases – CS, SST

Tube & Fittings – CS, SST

TEMPERATURE RANGE:

-400°F to +400°F (-240°C to +204°C)

MODEL // **5200**

The Model 5200 is a low pressure/vacuum vent designed to vent the tank vapor away to a header system and to relieve vacuum pressure within the tank. The 5200 is a pilot operated design. The precision of the pilot feature allows tight seat leakage closer to set point and full flow with less overpressure.

VIEW IN 3D!

LINE SIZES AVAILABLE

2” (DN50)	3” (DN80)	4” (DN100)	6” (DN150)	8” (DN200)	10” (DN250)	12” (DN300)

END CONNECTIONS

FLANGED

COMMON APPLICATIONS

APPLICATIONS THAT REQUIRE VAPORS TO BE PIPED AWAY

DESIGN PRESSURE

MULTIPLE SET PRESSURE & VACUUM RANGES AVAILABLE

MATERIALS:

Body – CS, 316 SST, Aluminum
Seat Ring – 316 SST, Aluminum
Pilot Seat/Pallet Diaph./Act. Diaph. – FFKM 1/FEP/FEP, EPDM/EPDM/EPDM, FFKM 2/FEP/FEP, FKM/FKM/FKM

TEMPERATURE RANGE:

-400°F to +400°F (-240°C to +204°C)

MODEL // **5400**

The Model 5400 is a low pressure vent designed to vent the tank vapor away to atmosphere. The 5400 is a pilot operated design. The precision of the pilot feature allows tight seat leakage closer to set point and full flow with less overpressure.

VIEW IN 3D!

LINE SIZES AVAILABLE

2” (DN50)	3” (DN80)	4” (DN100)	6” (DN150)	8” (DN200)	10” (DN250)
12” (DN300)	16” (DN400)	18” (DN450)	20” (DN500)	24” (DN600)	

END CONNECTIONS

FLANGED

COMMON APPLICATIONS

ATMOSPHERIC & LOW-PRESSURE TANKS

DESIGN PRESSURE

MULTIPLE SET PRESSURE RANGES AVAILABLE

MATERIALS:

Housing – CS, 316 SST, Aluminum
Trim – 316 SST, Aluminum
Diaphragm Cases – CS, SST
Tube & Fittings – CS, SST

TEMPERATURE RANGE:

-400°F to +400°F (-240°C to +204°C)

MODEL // **5500**

The Model 5500 is a low pressure vent designed to vent the tank vapor away to a header system. The 5500 is a pilot operated design. The precision of the pilot feature allows tight seat leakage closer to set point and full flow with less overpressure

VIEW IN 3D!

LINE SIZES AVAILABLE

2” (DN50)	3” (DN80)	4” (DN100)	6” (DN150)	8” (DN200)	10” (DN250)	12” (DN300)

END CONNECTIONS

FLANGED

COMMON APPLICATIONS

WHERE PRESSURE RELIEF IS REQUIRED AND RELIEVING VAPORS MUST BE PIPED AWAY.

DESIGN PRESSURE

MULTIPLE SET PRESSURE RANGES AVAILABLE

MATERIALS:

Body – CS, 316 SST, Aluminum
Seat Ring – 316 SST, Aluminum
Pilot Seat/Pallet Diaph./Act. Diaph. – FFKM 1/FEP/FEP, EPDM/EPDM/EPDM, FFKM 2/FEP/FEP, FKM/FKM/FKM

TEMPERATURE RANGE:

-400°F to +400°F (-240°C to +204°C)

MODEL // **1049**

The Model 1049 is a low pressure vent designed to vent the tank vapor away to header system, similar to the 5500. The 1049 is a pilot operated design. The precision of the pilot feature allows tight seat leakage closer to set point and full flow with less overpressure.

VIEW IN 3D!

LINE SIZES AVAILABLE

2" x 3" (DN50 x DN80)	3" x 4" (DN80 x DN100)	4" x 6" (DN100 x DN150)	6" x 8" (DN150 x DN200)
8" x 10" (DN200 x DN250)	10" x 12" (DN250 x DN300)	12" x 16" (DN300 x DN400)	

END CONNECTIONS

RAISED FACE FLANGED

COMMON APPLICATIONS

NORMAL VENTING OF LOW PRESSURE STORAGE TANKS & OVERPRESSURE PROTECTION OF PIPING SYSTEMS

DESIGN PRESSURE

MULTIPLE SET PRESSURE RANGES AVAILABLE

MATERIALS:

Body – CS, 316 SST
Diaphragm Case, Spring Bonnet & Cap – CS, 316 SST
Trim – 316 SST
Diaphragm – EPDM, FKM, Teflon®, FFKM 1, FFKM 2

Soft Seat & Seals – EPDM, FKM, FFKM 1, FFKM 2

TEMPERATURE RANGE:

-50°F to +400°F (-45°C to +204°C)

MODEL // **1078**

The Model 1078 is a low pressure pilot operated blanketing valve allowing tanks to be controlled with much tighter tolerances than before. The unit has multiple flow plugs, sensing configurations and body configurations in order to meet the specific needs of the end user.

VIEW IN 3D!

LINE SIZES AVAILABLE

- 1" (DN25)
- 2" (DN50)

END CONNECTIONS

- FNPT
- WELDNECK RF FLANGED
- INTEGRAL RF FLANGED

COMMON APPLICATIONS

STORAGE TANK BLANKETING

DESIGN PRESSURE

INLET: 30-200 psig (2-13.7 Barg)
OUTLET: 0.5" WC - 14 psig (1.24 mbar-0.96 Barg)

MATERIALS:

Diaphragm Case – CS, SST, Hastelloy C®

Trim – 316 SST, Hastelloy C®

Diaphragm – PTFE

Soft Seat & Seals – FKM, Buna-N, EPDM, FFKM 1, FFKM 2

TEMPERATURE RANGE:

-55°F to +400°F (-48°C to +204°C)

MODEL // **1088**

The Model 1088 is a spring operated blanketing valve allowing tanks to be controlled with much tighter tolerances than with standard regulators. The unit has multiple sensing configurations, and body configurations in order to meet the specific needs of the end user.

VIEW IN 3D!

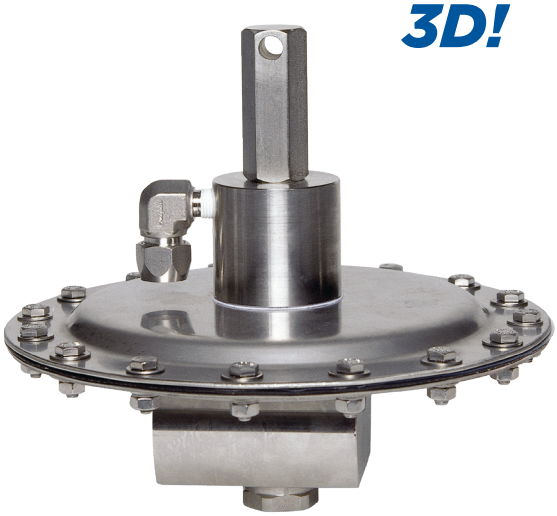

LINE SIZES AVAILABLE

- 1/2" (DN15)
- 3/4" (DN20)
- 1" (DN25)

END CONNECTIONS

- NPT
- FLANGED
- QUICK CLAMP THREADED

COMMON APPLICATIONS

SMALL TANK BLANKETING

DESIGN PRESSURE

INLET: 20-200 psig (1.3-3.7 Barg)
OUTLET: 0.75" WC-14 psig (1.9mbar-0.96 Barg)

CV RANGE:

From 0.4 to 1.1

TEMPERATURE RANGE:

-55°F to +400°F (-48°C to +204°C)

MATERIALS:

Diaphragm Case – CS, SST
Trim – 316 SST
Diaphragm – PTFE
Soft Seat & Seals – FKM, Buna-N, EPDM, FFKM 1, FFKM 2,

MODEL // **1100**

VIEW IN 3D!

The Model 1100 is a stainless steel sanitary vent designed to operate at multiple set points as a breather valve to avoid vacuum or over pressurization inside a tank or piping system. This unit comes with a true sanitary blanketing connection, and is designed so that it can be used with our sanitary blanketing valve; VCI Model 1088.

LINE SIZES AVAILABLE

- 2" (DN50)
- 3" (DN80)
- 4" (DN100)
- 6" (DN150)

END CONNECTIONS

- SANITARY QUICK CLAMP

COMMON APPLICATIONS

PHARMACEUTICAL INDUSTRY, PROCESSED FOOD PRODUCTION, COSMETICS & SPECIALTY CHEMICALS

DESIGN PRESSURE

MULTIPLE SET PRESSURE & VACUUM RANGES AVAILABLE

MATERIALS:

Housing – 316L SST
Seal – FKM

MODEL // **8700**

The Model 8700 emergency pressure/vacuum vents provide emergency pressure and vacuum relief beyond that furnished by the normal pressure vent for atmospheric and low pressure tanks, as well as providing a convenient access for tank cleaning, inspection and repair. Emergency relief valves provide relief from excessive internal pressure which may be caused by an abnormal condition, such as ruptured internal heating coils or an external fire. The vacuum relief allows the intake of air necessary to maintain the tank pressure within the permissible vacuum limit to avoid damage to the tank.

VIEW IN 3D!

LINE SIZES AVAILABLE

- 16" (DN400)
- 18" (DN450)
- 20" (DN500)
- 24" (DN600)

END CONNECTIONS

- NPT
- FLANGED
- QUICK CLAMP THREADED

COMMON APPLICATIONS

ATMOSPHERIC & LOW-PRESSURE TANKS

DESIGN PRESSURE

MULTIPLE SET PRESSURE RANGES AVAILABLE

MATERIALS:

Body/Pallet/Weather Hood – Alum/Alum/Alum, 304 SST/Alum/Alum, 304 SST/CS/CS, 304 SST/316 SST/CS, 316 SST/316 SST/304 SST

Diaphragm – FEP TFE, Buna-N, EPDM, FKM

TEMPERATURE RANGE:

-400°F to +400°F (-240°C to +204°F)

SEAT LEAKAGE:

MEETS OR EXCEEDS API STANDARD 2000

MODEL // **3700**

VIEW IN 3D!

The Model 3700 is a bottom guided emergency relief vent designed to vent the tank vapor away to atmosphere above the requirements of the standard pressure vent.

LINE SIZES AVAILABLE

- 16" (DN400)
- 18" (DN450)
- 20" (DN500)
- 24" (DN600)

END CONNECTIONS

FLANGED

COMMON APPLICATIONS

ATMOSPHERIC & LOW-PRESSURE TANKS

DESIGN PRESSURE

MULTIPLE SET PRESSURE RANGES AVAILABLE

MATERIALS:

Body Flange/Seat & Pallet - Aluminum, CS, 304 SST, 316 SST, Derakane® 470, Hetron® 800

TEMPERATURE RANGE:

-400°F to +400°F (-240°C to +204°F)

SEAT LEAKAGE:

MEETS OR EXCEEDS API STANDARD 2000

MODEL // **8910**

The Model 8910 pressure relief vent provides emergency pressure relief beyond that furnished by the normal pressure vent for atmospheric and low pressure tanks, as well as convenient access for tank cleaning, inspection and repair. The 8910 is top guided and spring loaded.

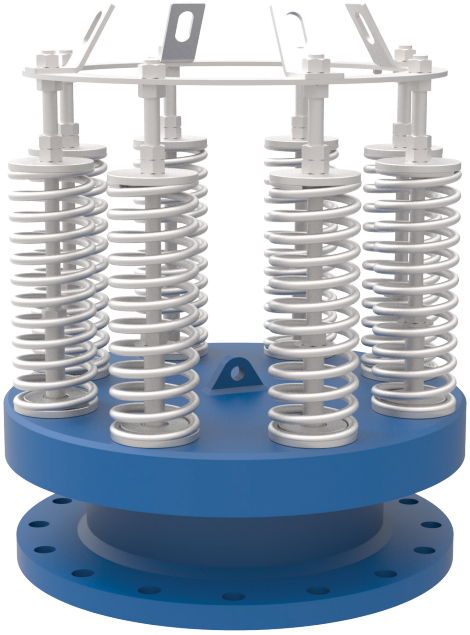

VIEW IN 3D!

LINE SIZES AVAILABLE

- 16" (DN400)
- 18" (DN450)
- 20" (DN500)
- 24" (DN600)

END CONNECTIONS

- FLANGED

COMMON APPLICATIONS

ATMOSPHERIC & LOW-PRESSURE TANKS

DESIGN PRESSURE

1/2 psig to 15 psig

MATERIALS:

Flange Base – Aluminum, 304 SST, 316 SST

Pressure Pallet/Seat – Aluminum, 316 SST

Hood – Aluminum, SST

TEMPERATURE RANGE:

-400°F to +400°F (-240°C to +204°F)

SEAT LEAKAGE:

MEETS OR EXCEEDS API STANDARD 2000

MODEL // **8920**

The Model 8920 pressure/vacuum relief vent provides emergency pressure relief beyond that furnished by the normal pressure vent for atmospheric and low pressure tanks, as well as convenient access for tank cleaning, inspection and repair. The 8920 is top guided and spring loaded.

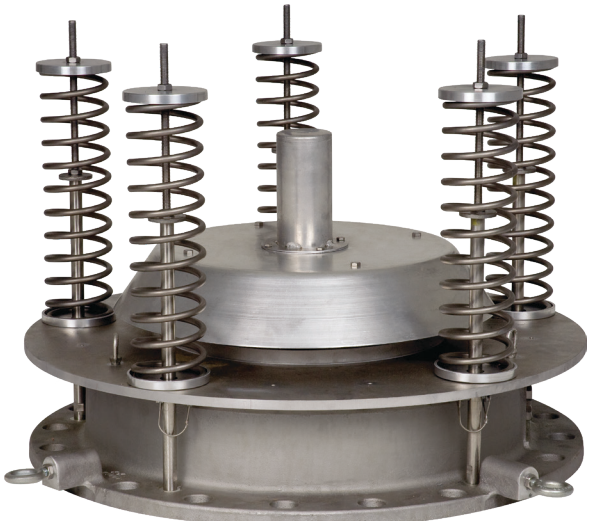

LINE SIZES AVAILABLE

- 16" (DN400)
- 18" (DN450)
- 20" (DN500)
- 24" (DN600)

END CONNECTIONS

FLANGED

COMMON APPLICATIONS

ATMOSPHERIC & LOW-PRESSURE TANKS

DESIGN PRESSURE

1/2 psig to 15 psig

MATERIALS:

Flange Base – Aluminum, 304 SST, 316 SST

Pressure Pallet/Seat – Aluminum, 316 SST

Hood – Aluminum, SST

TEMPERATURE RANGE:

-400°F to +400°F (-240°C to +204°F)

SEAT LEAKAGE:

MEETS OR EXCEEDS API STANDARD 2000

MODEL // **8930**

The Model 8930 pressure relief vent provides emergency pressure relief beyond that furnished by the normal pressure vent for atmospheric and low pressure tanks, as well as convenient access for tank cleaning, inspection and repair. The 8930 is weight loaded. Additionally, the Model 8930 utilizes a dual swivel hinge design with two directional rotation.

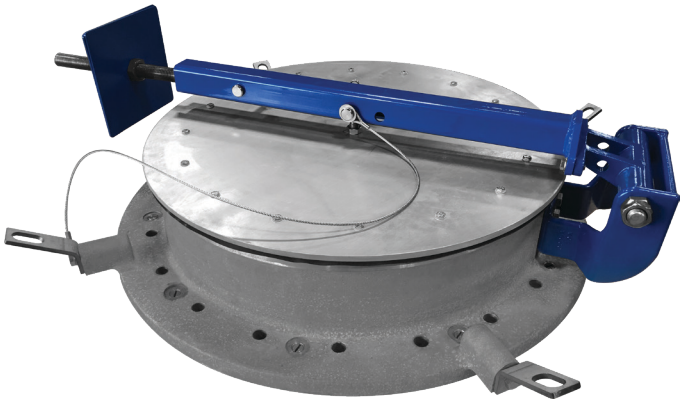

LINE SIZES AVAILABLE

- 16" (DN400)
- 18" (DN450)
- 20" (DN500)
- 24" (DN600)

END CONNECTIONS

FLANGED

COMMON APPLICATIONS

ATMOSPHERIC & LOW-PRESSURE TANKS

DESIGN PRESSURE

< 1/2 psig

MATERIALS:

Flange Base – Aluminum, 304 SST, 316 SST

Pressure Pallet/Seat – Aluminum, 316 SST

Hood – Aluminum, SST

TEMPERATURE RANGE:

-400°F to +400°F (-240°C to +204°F)

SEAT LEAKAGE:

MEETS OR EXCEEDS API STANDARD 2000

MODEL // **8940**

The Model 8940 pressure relief vent provides emergency pressure/vacuum relief beyond that furnished by the normal pressure vent for atmospheric and low pressure tanks, as well as convenient access for tank cleaning, inspection and repair. The 8940 is weight/spring loaded. Additionally, the Model 8940 utilizes a dual swivel hinge design with two directional rotation.

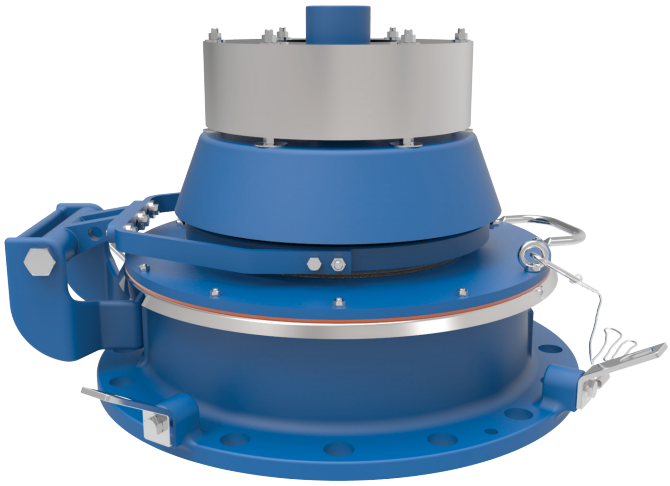

LINE SIZES AVAILABLE

- 16" (DN400)
- 18" (DN450)
- 20" (DN500)
- 24" (DN600)

END CONNECTIONS

FLANGED

COMMON APPLICATIONS

ATMOSPHERIC & LOW-PRESSURE TANKS

DESIGN PRESSURE

MULTIPLE SET PRESSURE & VACUUM RANGES AVAILABLE

MATERIALS:

Flange Base – Aluminum, 304 SST, 316 SST

Pressure Pallet/Seat – Aluminum, 316 SST

Hood – Aluminum, SST

Diaphragm – FEP, Buna-N, EPDM, FKM

TEMPERATURE RANGE:

-400°F to +400°F (-240°C to +204°F)

SEAT LEAKAGE:

MEETS OR EXCEEDS API STANDARD 2000

MODEL // **2100**

The Model 2100 is a gauge hatch that allows easy access to tank vessels for gauging and sample collecting. Available as non-locking or with a Knob Latch or Kick Latch.

Non-Locking Design Shown

LINE SIZES AVAILABLE

- 4" (DN100)
- 6" (DN150)
- 8" (DN200)
- 10" (DN250)
- 12" (DN300)

END CONNECTIONS

- FLANGED

COMMON APPLICATIONS

ATMOSPHERIC & LOW-PRESSURE TANKS

DESIGN PRESSURE

MULTIPLE SET PRESSURE RANGES AVAILABLE

MATERIALS:

Housing/Pallet – Aluminum, CS, 316 SST

Diaphragm – FEP-TFE, Buna-N, EPDM, FKM

MODEL // **2199**

The Model 2199 is a gauge hatch that allows easy access to tank vessels for gauging and sample collecting. Available as non-locking or with a Knob Latch or Kick Latch.

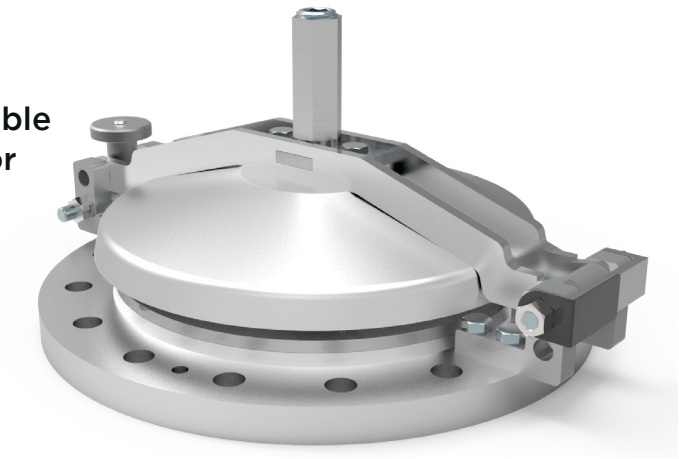

LINE SIZES AVAILABLE

8” (DN200)

END CONNECTIONS

FLANGED

COMMON APPLICATIONS

ATMOSPHERIC & LOW-PRESSURE TANKS

DESIGN PRESSURE

16, 12, 8, 4 oz/in^2

MATERIALS:

Flange Base – Aluminum, SST

Pressure/Vacuum Pallets – Aluminum, SST

O-Ring – Buna-N, FKM

TEMPERATURE RANGE:

-30°F to +400°F (-34°C to +204°C)

MODEL // **2049**

The Model 2049 is a tank manifold that allows the end user to utilize a single tank nozzle for both tank blanketing and venting requirements.

NOZZLE CONNECTION SIZES

- 2" (DN50)
- 3" (DN80)
- 4" (DN100)
- 6" (DN150)
- 8" (DN200)
- 10" (DN250)
- 12" (DN300)

END CONNECTIONS

- RF FLANGED

COMMON APPLICATIONS

STORAGE TANK VENTING SOLUTION

DESIGN PRESSURE

MULTIPLE SET PRESSURE & VACUUM RANGES AVAILABLE

MATERIALS:

Body – 316 SST, CS

Check out the other high quality product lines
available exclusively from Cashco.

Industrial Regulators

Control Valves

Flame Arrestors

Sanitary Regulators & Control Valves

Cashco, Inc.
607 West 15th Street • P.O. Box 6 • Ellsworth, Kansas 67439
Ph. (785) 472-4461 • Fax: (785) 472-3539