Dwyer®

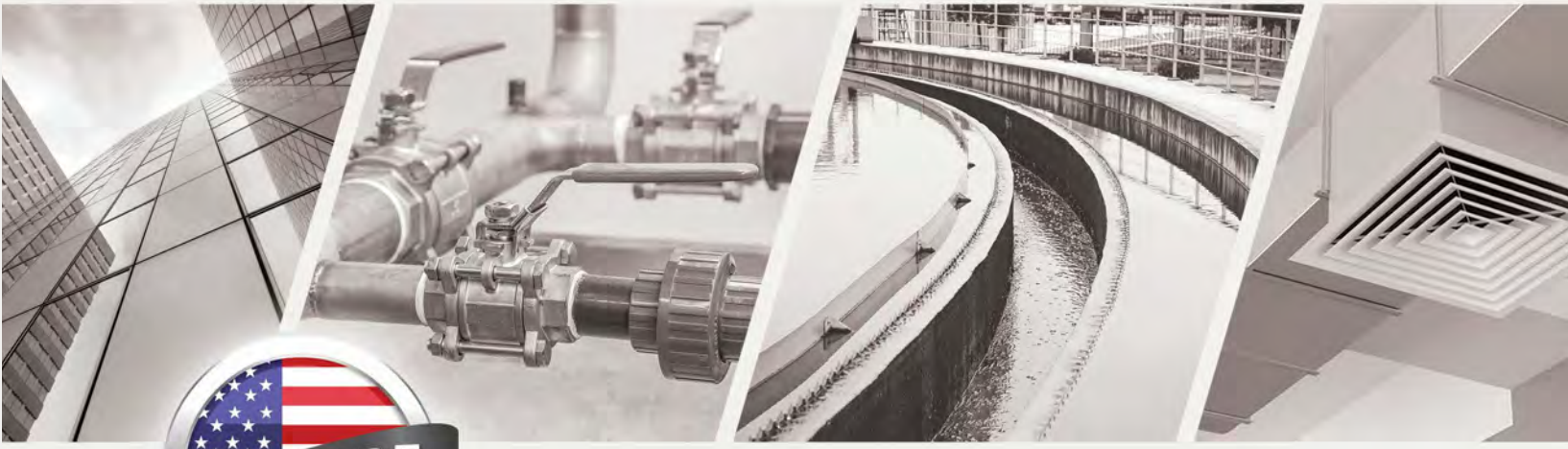

USA MADE

MANUFACTURING EXCELLENCE SINCE 1931

Pressure | Temperature | Test, Adjust, & Balance | Air Quality

Flow | Level | Process Control | Valves

DWYER-INST.COM

The **trusted leader** in manufacturing innovative instrumentation solutions for the **worldwide** HVAC and process automation markets

CUSTOMER SATISFACTION

Meet and exceed customer and market expectations

INNOVATIVE

Sustained R&D and product development

COMPETITIVE

Highly automated and flexible manufacturing capabilities

TRUSTED

High-quality, reliable, and readily available products and solutions

GLOBAL SUPPORT

Global sales and marketing presence

ESTABLISHED DWYER BRANDS

PROXIMITY®

W.E. Anderson®

Mercoid®

DWYER AROUND THE GLOBE

CONTACT INFORMATION

CORPORATE HEADQUARTERS

DWYER INSTRUMENTS, LLC
102 Indiana Highway 212
P.O. Box 373
Michigan City, IN 46360, U.S.A.

DWYER-INST.COM
Phone | (219) 879-8000
Toll-Free | (800) 872-9141
Fax | (219) 872-9057

AUSTRALIA

DWYER INSTRUMENTS AUSTRALIA, LLC
Unit 1, 11 Waverley Drive
P.O. Box 359
Unanderra, NSW 2526 Australia

DWYER-INST.COM.AU
Phone | +61 (0) 2 4272 2055
Fax | +61 (0) 2 4272 4055

UNITED KINGDOM

DWYER INSTRUMENTS UK, LLC
Unit 16, The Wye Estate, London Road
High Wycombe, Bucks HP11 1LH-U.K.

DWYER-INST.CO.UK
Phone | +44 (0) 1494 461707
Fax | +44 (0) 1494 465102

HONG KONG

DWYER INSTRUMENTS HK, LLC
Unit 605A, 6/F, Shui Hing Centre
13 Sheung Yuet Road,
Kowloon Bay, Hong Kong

DWYER-INST.COM.HK
Phone | +852-23181007
Fax | +852-27561565

OTHER CONTACTS

ORDERS
orders@dwyermail.com

TECHNICAL SUPPORT
tech@dwyermail.com

LITERATURE REQUESTS
lit@dwyermail.com

QUOTATION/BID REQUESTS
quotes@dwyermail.com

GENERAL INFORMATION
info@dwyermail.com

INTERNATIONAL CUSTOMERS

Dwyer has local distributors in over 79 countries. Contact the office of your country or contact the corporate headquarters to find your local distributor. You can also go to our website at the following address to be contacted by your local distributor: **dwyer-inst.com/Distributor**

ABOUT US

Since the company was founded in 1931, customers have come to recognize Dwyer Instruments, LLC to stand for quality, reliability, and readily available competitively priced products. As a leading manufacturer in the controls and instrumentation industry, we continue to grow and serve major markets including, but not limited to: HVAC, chemical, agriculture, food, oil and gas, water, wastewater, powder and bulk, and pollution control.

Dwyer holds over 650 technical patents and that number grows every year. We are an enthusiastic group of people headquartered in Michigan City, Indiana, with satellite locations around the globe. We take great pride in the intellect and integrity of our employees, who are passionate about the work we do, the products we develop, and the industries we serve.

MANUFACTURING EXCELLENCE

At Dwyer, it all starts with commitment to meeting the needs of our customers. We strive to make dependable, easy-to-use products.

With over 90 years of manufacturing expertise, we stand behind our high quality products. Dwyer products are trusted in applications all over the world in nearly every industry.

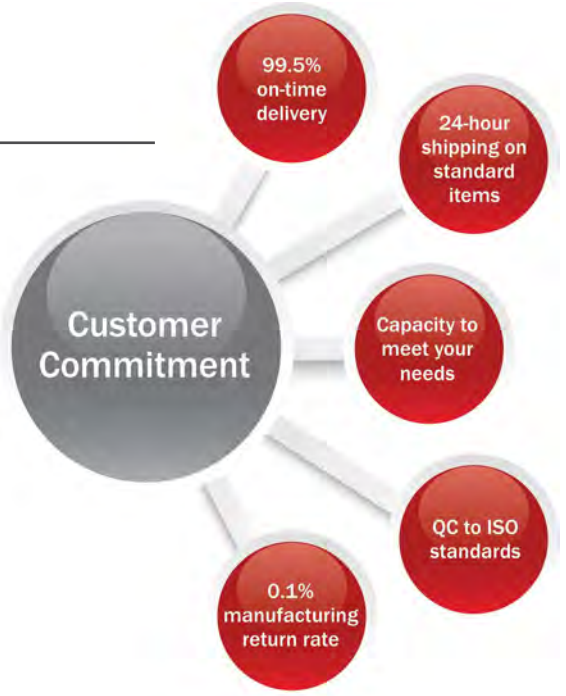

MANUFACTURING & DESIGN CENTER LOCATIONS

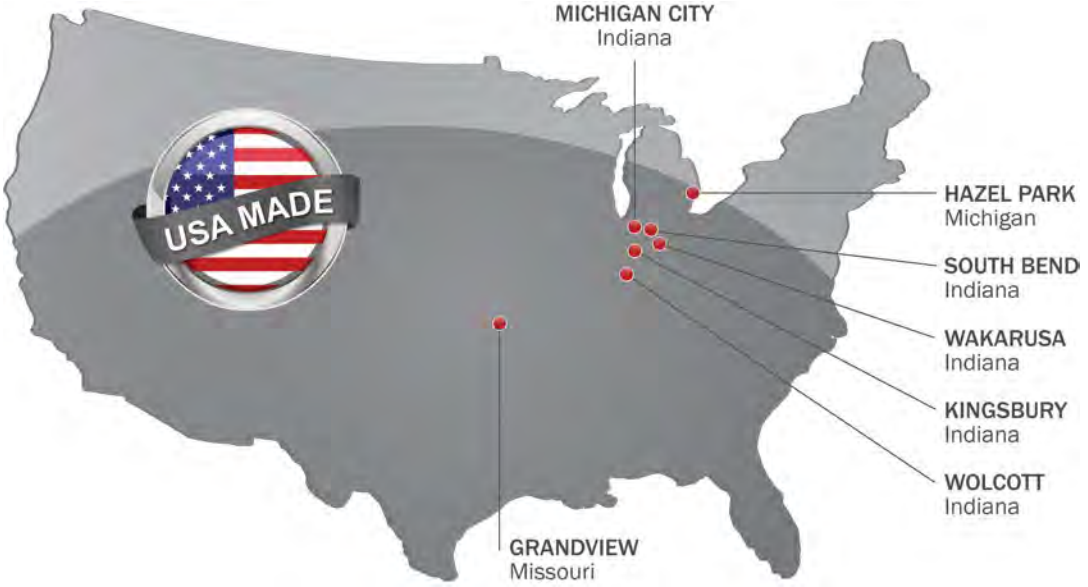

OUR PEOPLE MAKE THE DIFFERENCE

CUSTOMER SERVICE

CUSTOMER CARE

Courteous and professional customer service representatives are available via phone and email to process and provide assistance with your order. Dwyer provides industry leading response time to answer your call quickly without waiting.

PRICING

Contact us for formal quotes. Dwyer offers bids and project quotes. Discounts are available for particular customer types based on quantities purchased.

PRODUCT DELIVERY

LARGE INVENTORY LOCATED CENTRALLY IN THE U.S.A.

Dwyer is committed to process and ship your order as quickly as possible, with more than 5,000 items stocked in our South Bend, Indiana warehouse. In most cases, lead time is less than one week for non-stocked products.

FAST PROCESSING & PACKING

Our dedicated shipping staff packs and ships your order same day on stocked items ordered before 1:00 PM U.S. Eastern Time.

FLEXIBLE SHIPPING

Dwyer offers blanket orders for OEMs to schedule out your product shipments for when you need them. Contact us for details.

TECHNICAL SUPPORT

All of our technical sales staff members are degreed engineers trained to be product and industry experts. We listen to your needs and get you the answers you want quickly.

WE HELP YOU FIND A SOLUTION

- Product Selection
- Application Assistance
- Regulatory and Compliance
- Installation Guidance
- Maintenance and Repair
- Product Customization for OEMs

CONTACT AN APPLICATIONS ENGINEER

PHONE: (219) 879-8000 | **FAX:** (219) 872-9057 | **EMAIL:** tech@dwyermail.com

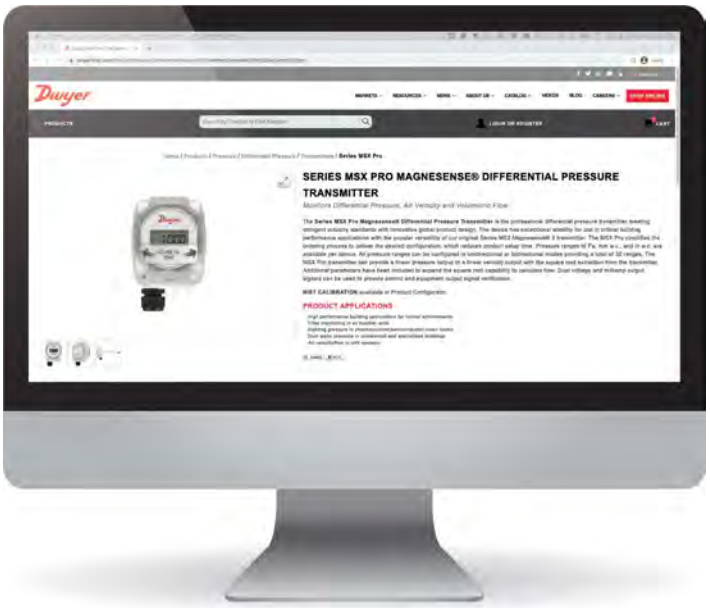

DWYER ONLINE

WEBSITE FEATURES

- **Product Search**
- **Literature** – Catalogs, Brochures, and Product Selection Guides
- **Product Application and Technical Guides**
- **Digital Catalogs**
- **Dedicated Support Product Pages**
- **Video Library**

PRODUCT PAGE FEATURES

- **Easy Online Ordering**
- **Product Support Library** – Instruction Manuals, Catalog Pages, and Data Sheets
- **Product Configurator** – Customize a Dwyer product to your specific application needs
- **Compliance Certificates** – CE, IECEx, FM, UL, CSA and ATEX
- **Instructional and Informational Videos**
- **Product Drawings and Photography**

DWYER CATALOG APP

Browse the Dwyer catalog online or download it for instant access offline. The Dwyer Catalog App is available in the iTunes® and Google Play™ stores.

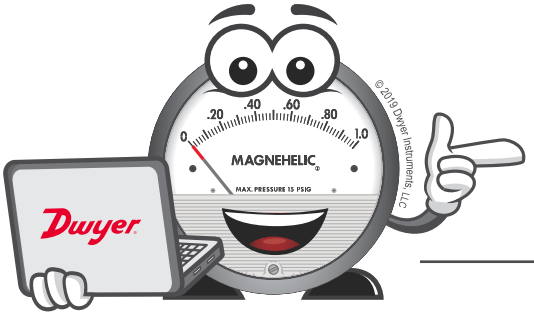

RELEASE A LITTLE PRESSURE BY ORDERING ONLINE!

- Save Time, Save Money
- Order 24/7
- Repeat Quick Orders
- Receive Special Incentives

DID YOU KNOW, YOU CAN...

REVIEW PREVIOUS ORDERS

See a list of all previous orders for the past year, and sort by PO number, order number or confirmation number. Quickly obtain order shipping dates and tracking information for any specific order.

REVIEW PREVIOUS PRODUCT PURCHASES

Create quotes online that can be easily printed, emailed, or converted to an order. Quotes are valid for 60 days and are stored for 120 days.

CREATE PROJECTS

Create and view stored projects for up to three years. Projects can later be easily converted into a quotation.

CONNECT WITH US

Dwyer Instruments, LLC is active on multiple social media platforms so you can stay connected with us throughout the year. Follow us on Facebook, LinkedIn, and Twitter so you're always up to date on new products and services, and learn about our company as a whole.

In addition, the Dwyer blog is updated weekly with articles written by our team of experts. These articles will help to give you a better understanding of the various industries we serve, while allowing you to gain in-depth knowledge of application case studies and helpful tips for Dwyer products.

Visit us at: **www.dwyer-inst.com/social**

CALIBRATION & REPAIR SERVICES

DEDICATED
Dwyer's dedication to quality is unmatched in the industry. We go above and beyond to provide impeccable service paired with quality calibrations.

COMMITTED
We understand being without your instrument can cost you money. We are committed to getting you your instrument back as fast as possible.

ACCURATE
You can feel confident by sending your equipment back to the original manufacturer.

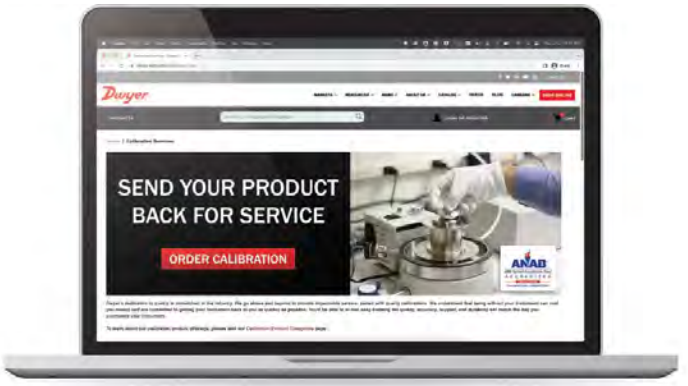

CALIBRATION CAPABILITIES

ELECTRICAL
Digital Multimeters | Clamp-on Meters | Amp Meters | Volt Meters | Data Loggers | Optical Tachometers

PRESSURE
Magnehelic® Differential Pressure Gage | Absolute Gages | Manometers | Micromanometers | Differential Pressure Gages

VELOCITY & AIR FLOW
SMART Air Hood® Balancing Instrument | Rotating Vane | Anemometer | Ultrasonic Flowmeter | Insertion Flow Transmitter

TEMPERATURE
Controllers | Probes | Transmitters

HUMIDITY
Probes | Transmitters

Our Engineering Laboratory has been accredited by the ANSI National Accreditation Board and meets the requirements of ISO/IEC 17025:2017 for calibration services. See our scope of accreditation for details at **http://www.dwyer-inst.com/calibration/scope**

ISO/IEC 17025 ACCREDITED CERTIFICATE OF CALIBRATION

An ISO/IEC 17025 Accredited Certificate of Calibration is available on select products at an additional charge (email accreditedcal@dwyermail.com for additional information). This certificate is created in our ANAB Accredited Standards Laboratory guaranteeing the calibration work performed is in agreement with the internationally recognized standards (i.e. ISO/IEC 17025:2017). Measurement and Test Equipment (M&TE) used in the calibration are traceable to NMI's (such as NIST) and are calibrated regularly at established intervals. The certificate includes all information regarding M&TE, environmental conditions, procedures used, data obtained for the unit under test (UUT), estimated measurement uncertainties (EMU), test uncertainty ratios (TUR) and probability of false acceptance (PFA) (TUR and PFA values are an additional charge). Pricing and availability varies by product. Additional or customer requested test points during the calibration are an additional charge.

CERTIFICATE OF NIST CALIBRATION

A Certificate of NIST Calibration is available for most indicating and transmitting instrumentation products at an additional charge. This certificate is created in our testing lab to NIST traceable test instruments and includes test points with recorded data and the reference standard. Pricing and availability varies by product. Please consult the options listing for the product on the catalog page or see the product on our website for availability.

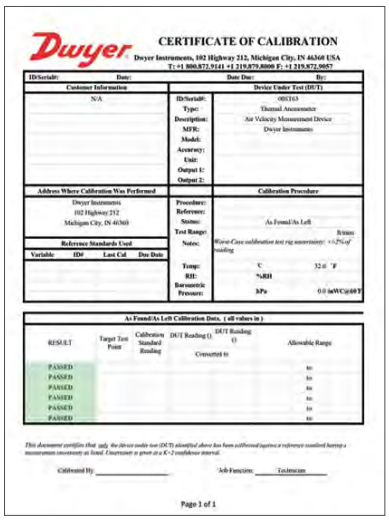

KEY MARKETS

HVAC

- Building Automation
- Test Equipment
- Critical Environments
  (Healthcare, Isolation Rooms, Clean Rooms)
- Original Equipment
  (Air Handlers, Boilers, Chillers, Cooling Towers)
- Valve Automation

PROCESS AUTOMATION

- Water and Wastewater
- Pharmaceutical
- Agriculture and Livestock
- Bulk Handling
- Industrial Process
- Mining and Heavy Earth Moving
- Oil, Gas and Petrochemical
- Power
- Valve Automation
- Semiconductor
- Laboratory Equipment

INNOVATION AWARDS

AHR EXPO
INNOVATION AWARDS
2019

WINNER

Wireless Hydronic Balancing Kit
Series 490W

The ACHR News is the leading trade magazine in the heating, ventilating, air conditioning, and refrigeration industries.

GOLD

- HVAC Mobile Meter® Software Test Instrument App
- PredictAir™ Application Software
- Air Velocity Transmitter | Series AVUL

SILVER

- Universal Handheld Test Instrument | Model UHH2
- Wireless Hydronic Balancing Kit | Series 490W
- Hydronic Application Software

BRONZE

- SMART Air Hood® Balancing Instrument | Series SAH
- Hydronic Differential Pressure Manometer | Series 490A
- Insertion Electromagnetic Flow Transmitter | Series IEF

HVAC TESTING

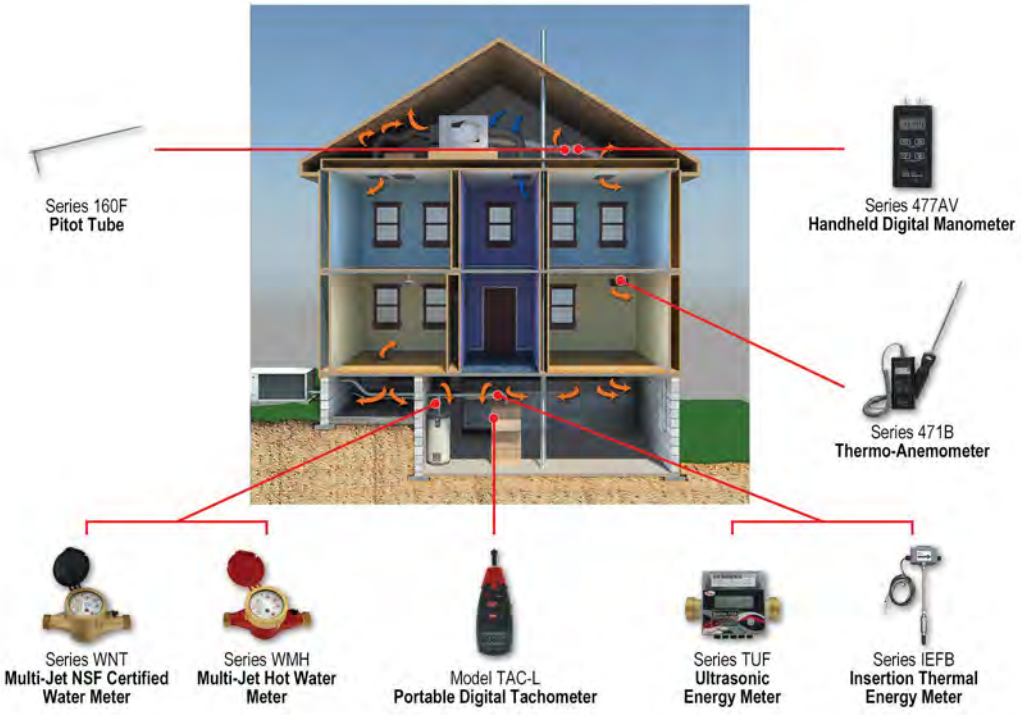

BUILDING BALANCING

AIR HANDLER

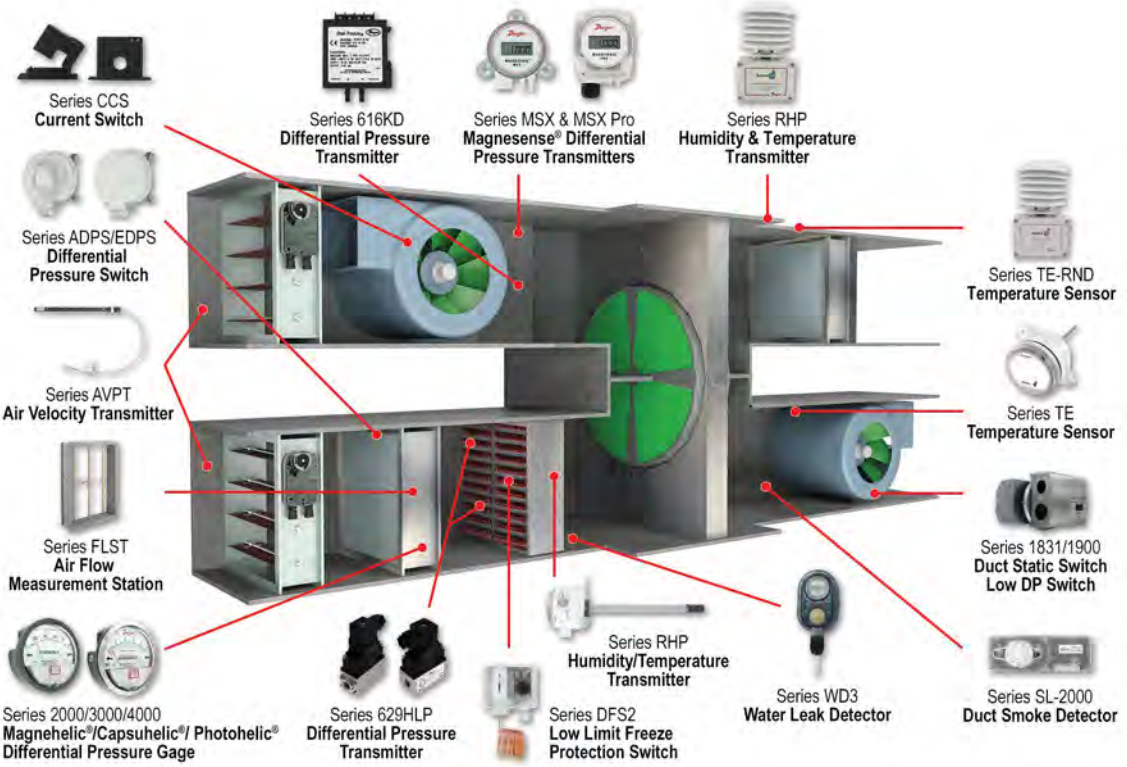

TERMINAL UNIT

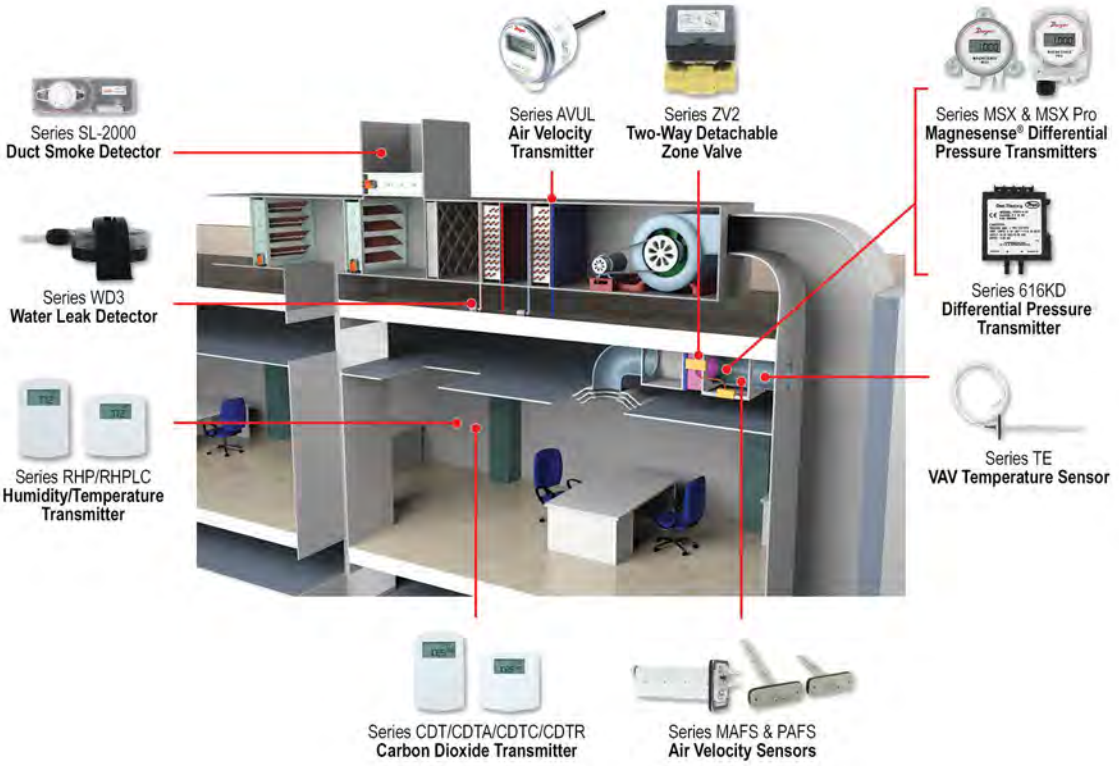

CHILLER PLANT

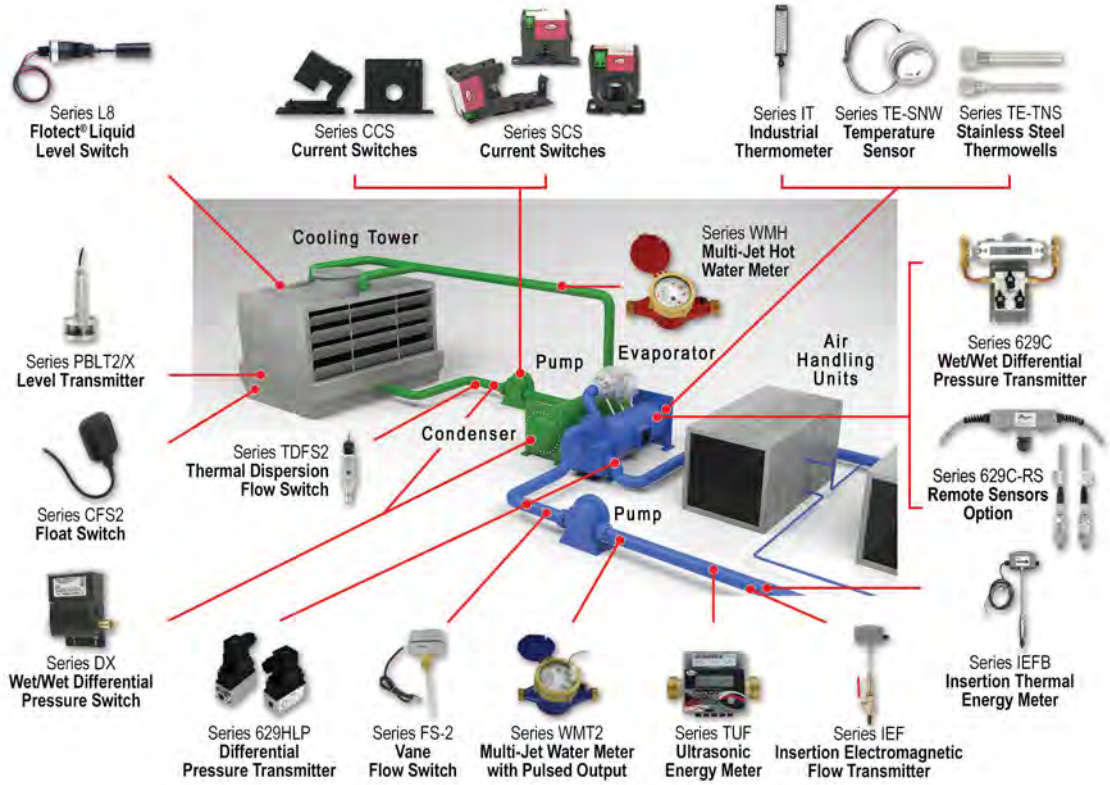

ISOLATION ROOM

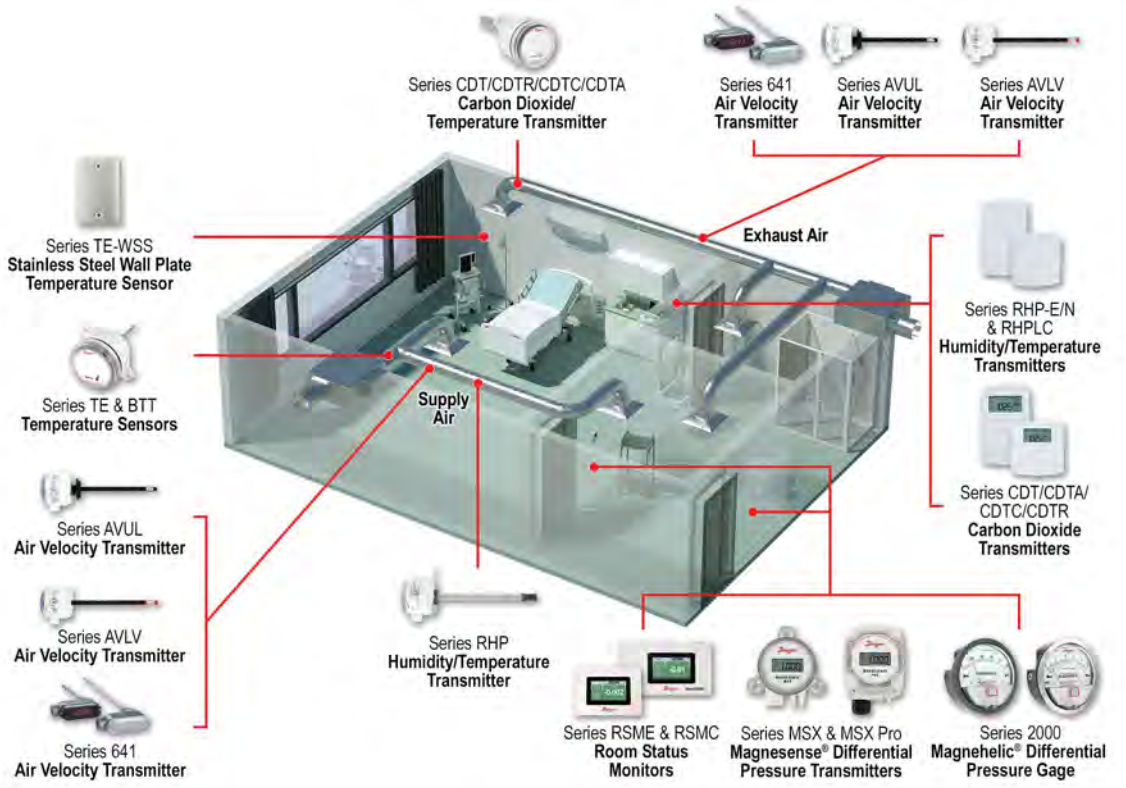

CONTAINMENT CHAMBER/BOX

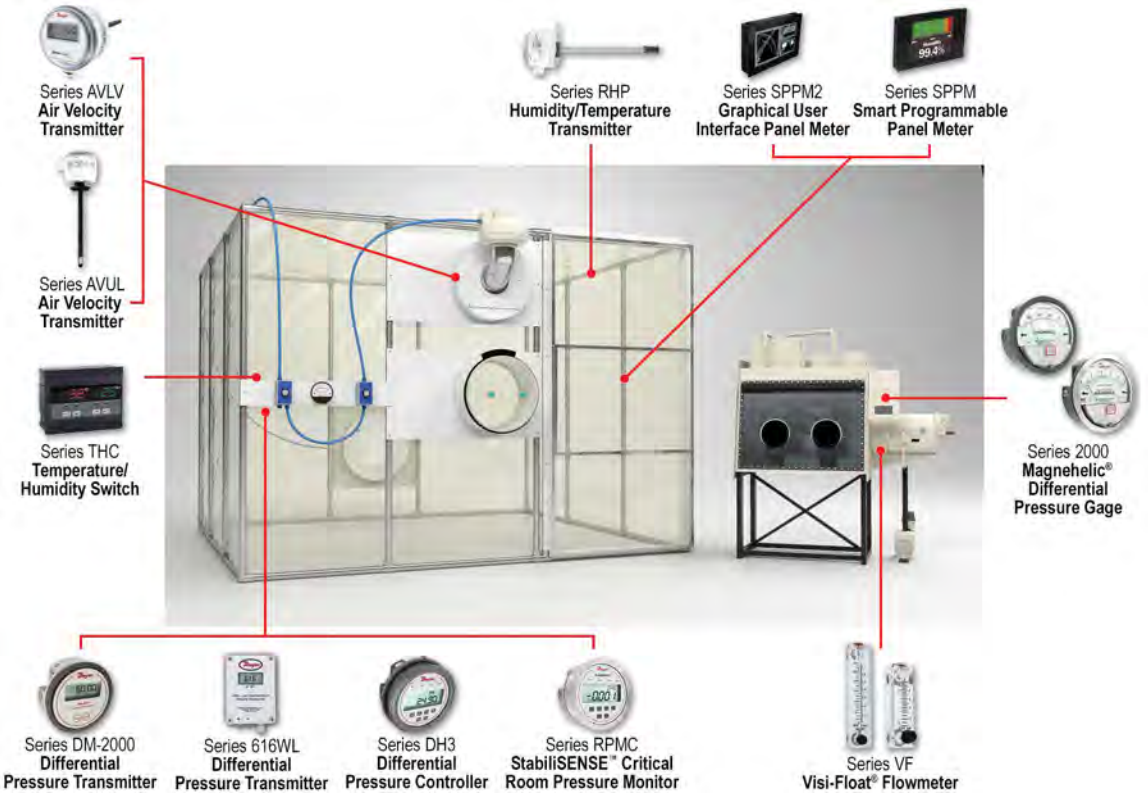

CLEAN ROOM

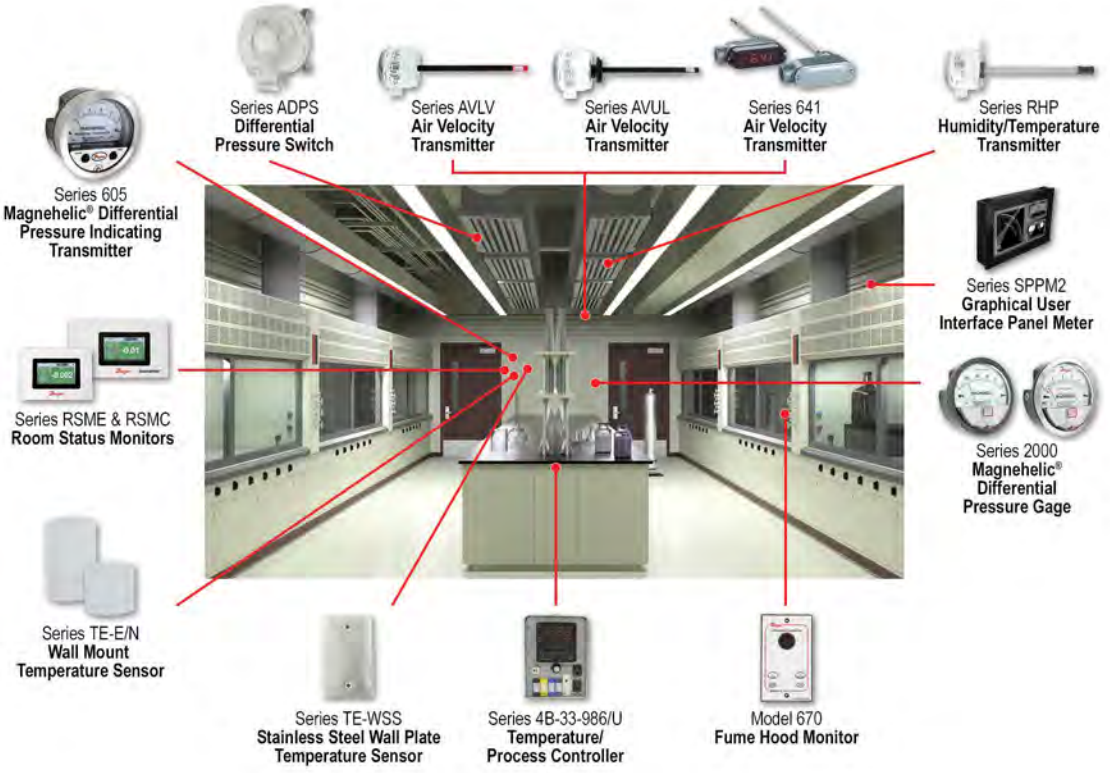

MIDSTREAM REFINERY/CHEM PLANT

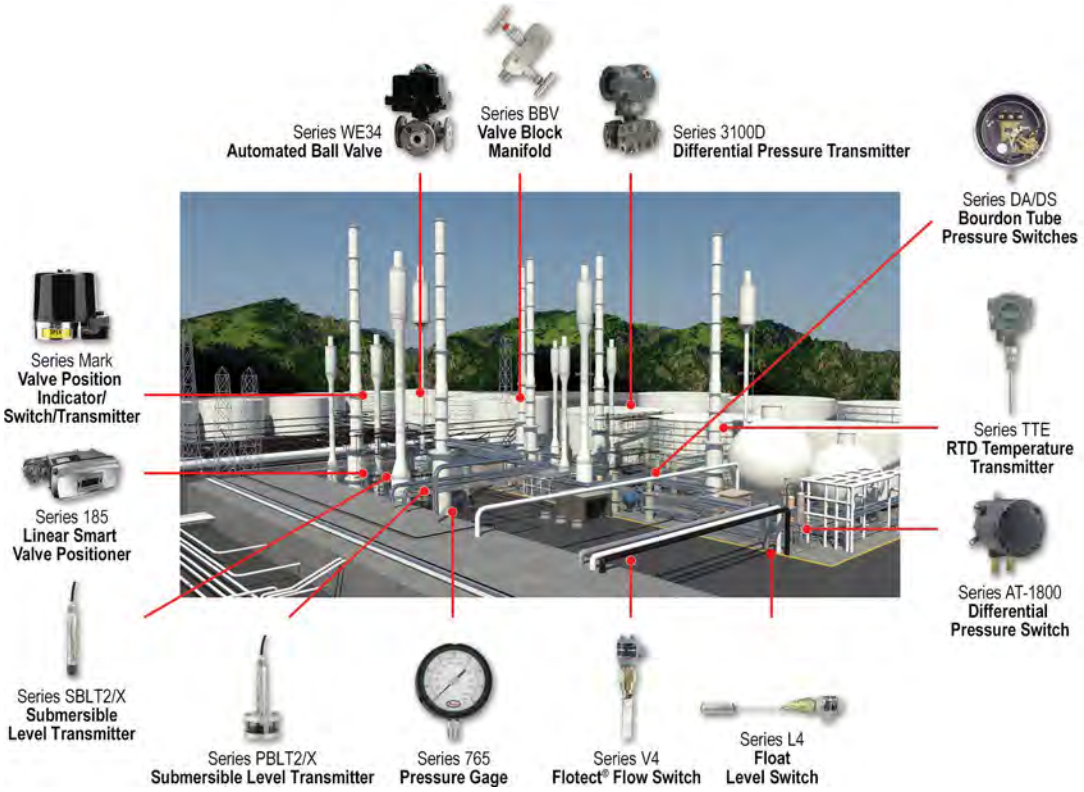

DUST COLLECTOR

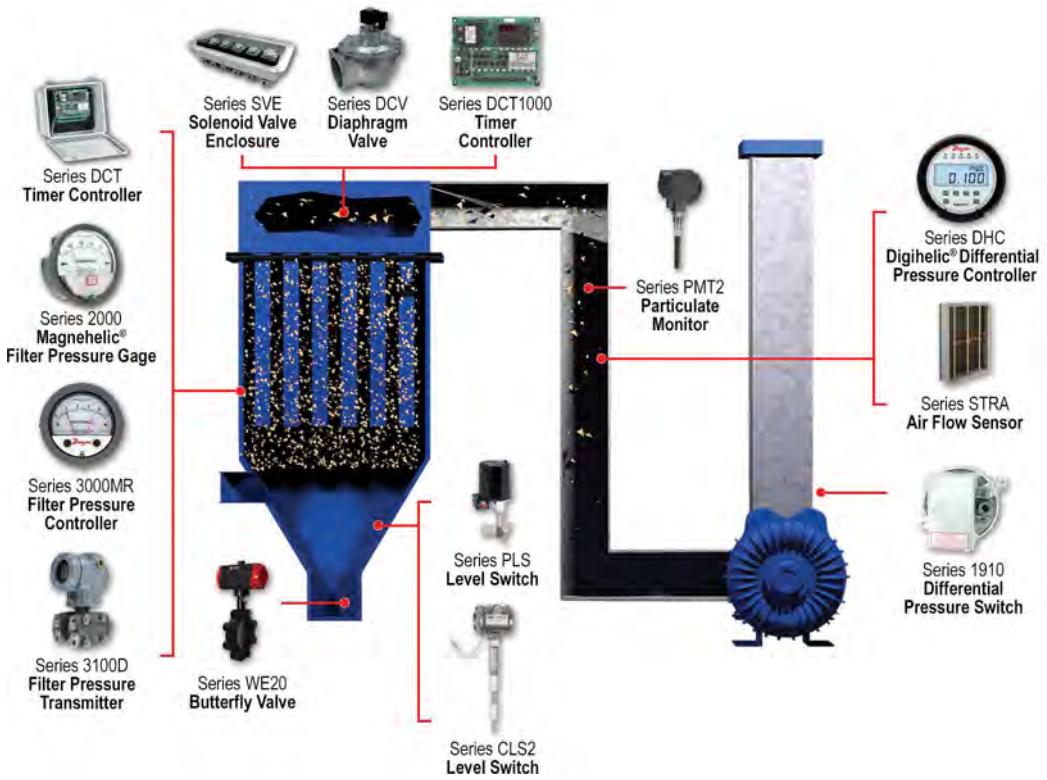

PUMP SKID

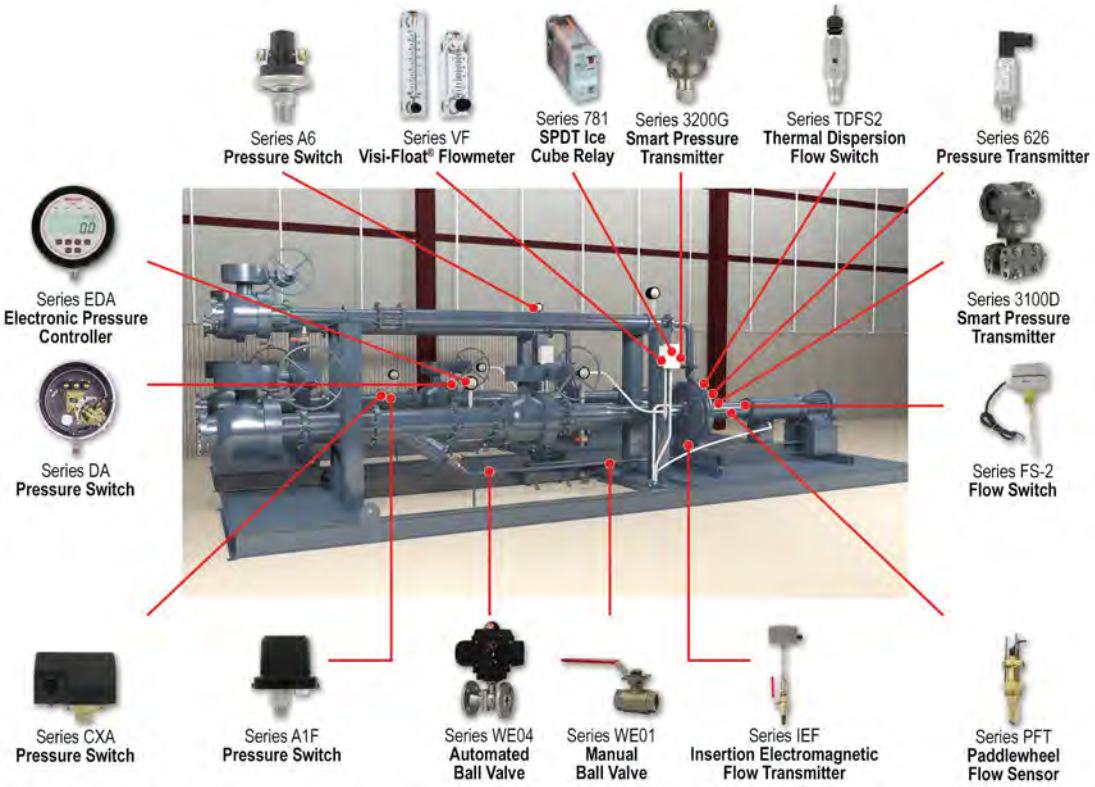

CLEAN WATER

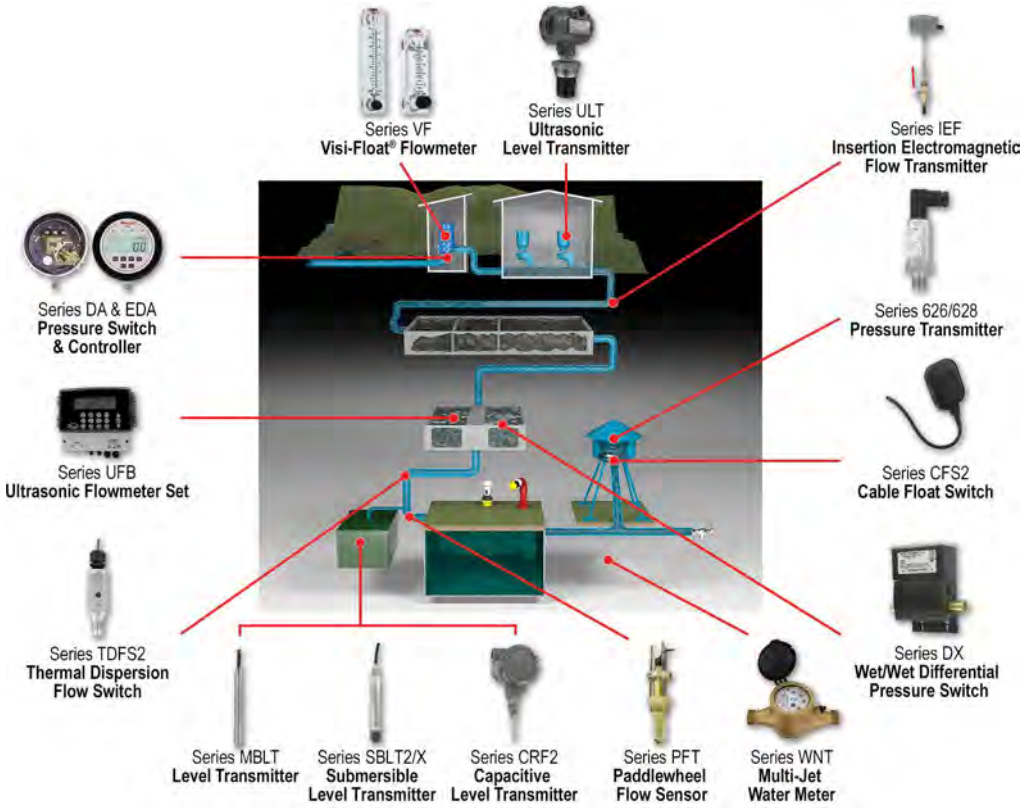

WASTEWATER

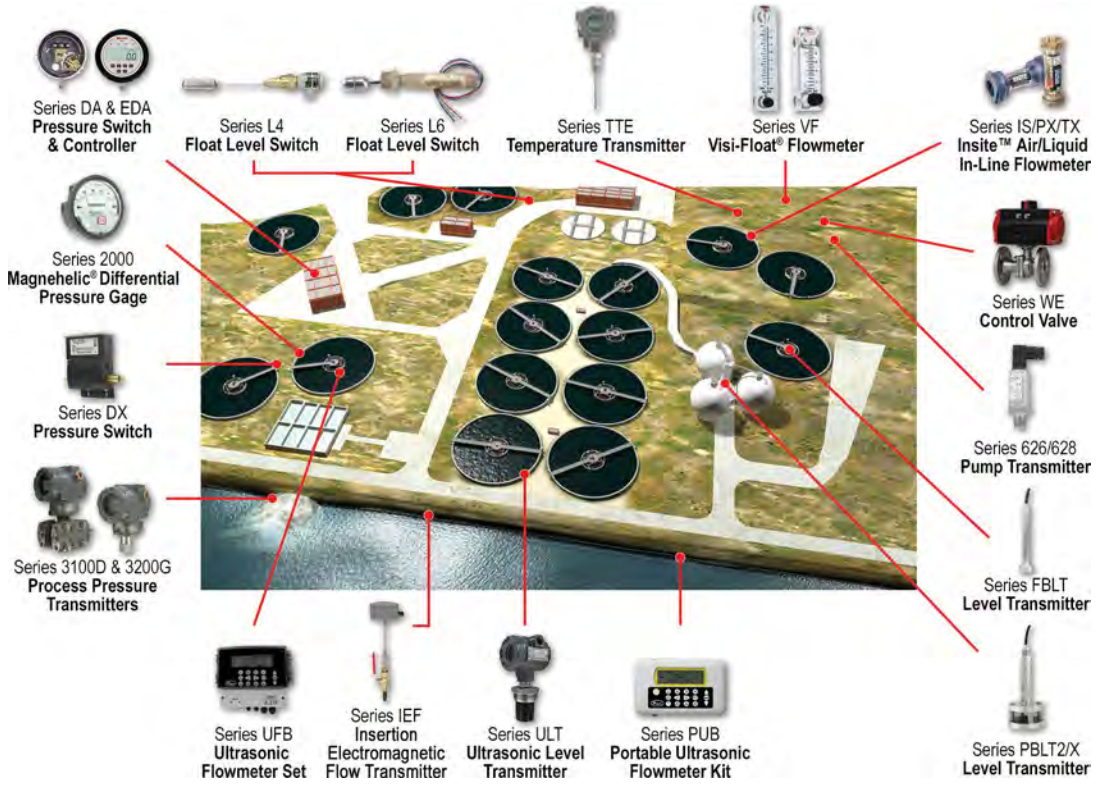

IRRIGATION

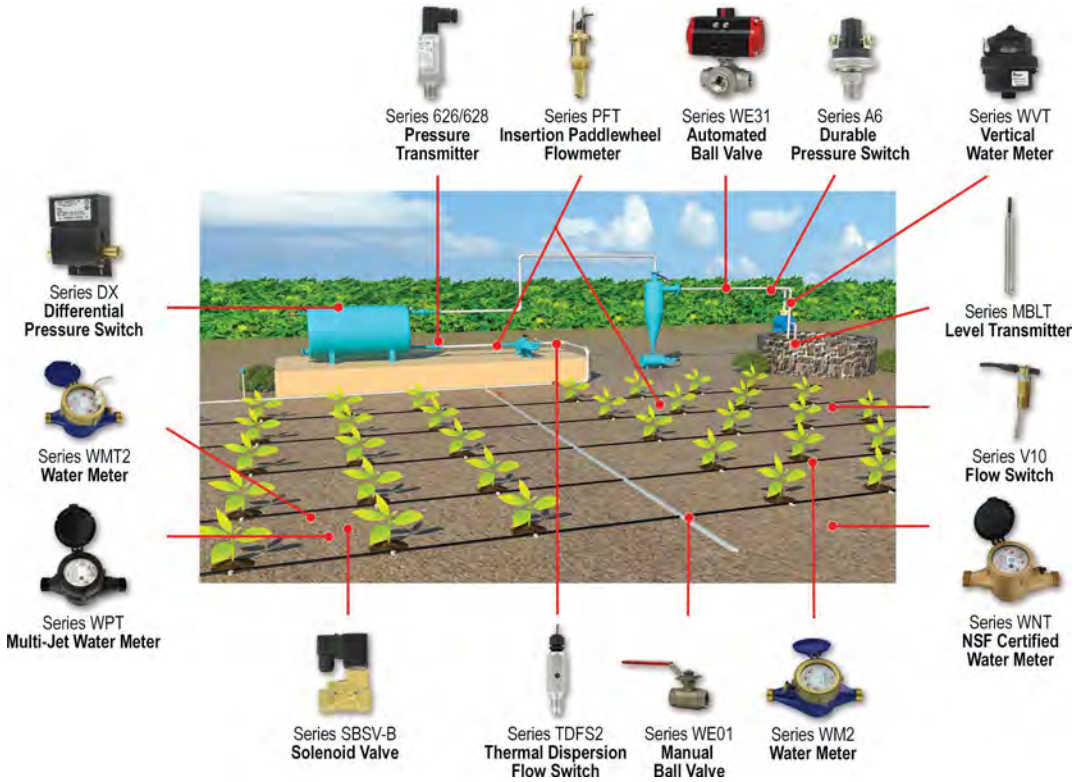

POULTRY/HOG/GREENHOUSES

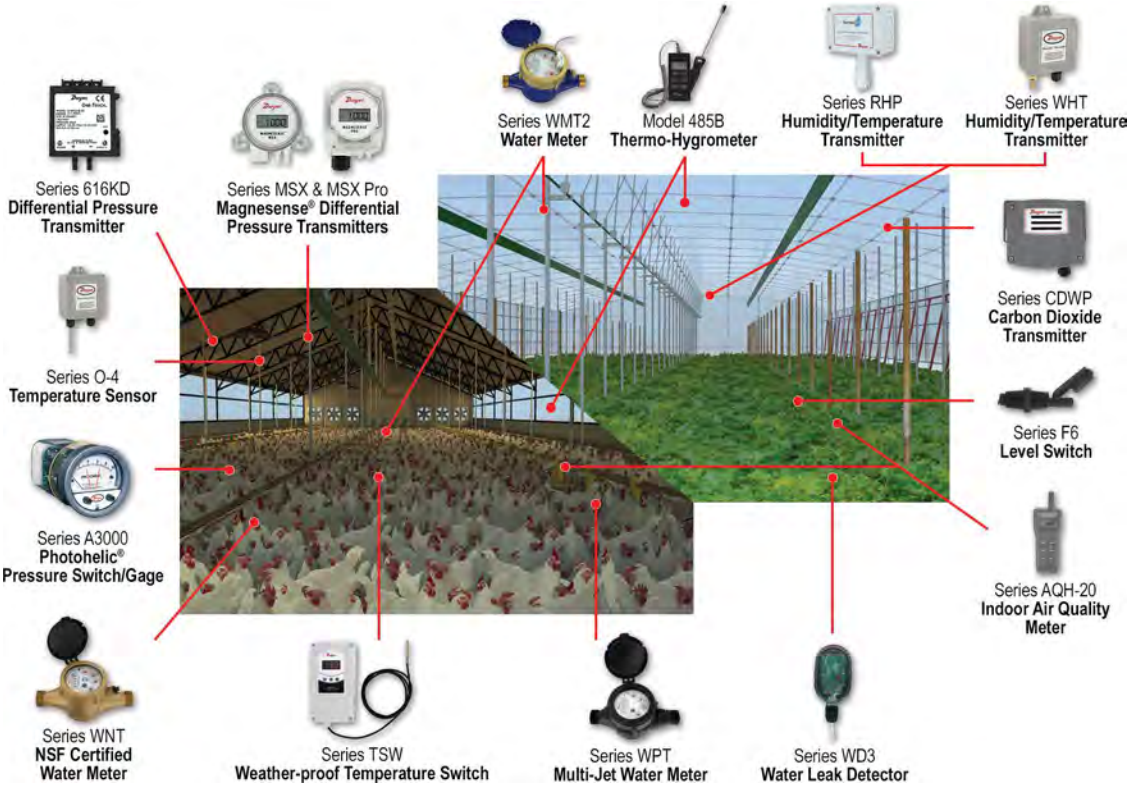

PRESSURE 1-108

1	Table of Contents
2-15	Selection Guides
16-17	Typical Applications
18-19	Pressure Sensor Accuracy
20-108	Product Pages

TEMPERATURE 109-148

109	Table of Contents
110-111	Selection Guides
112-113	Typical Applications
114-148	Product Pages

TEST, ADJUST, & BALANCE 149-200

149	Table of Contents
150-153	Selection Guides
154-155	Typical Applications
156-161	HVAC Measurement Guide
162-200	Product Pages

AIR QUALITY 201-234

201	Table of Contents
202-203	Selection Guides
204-205	Typical Applications
206-234	Product Pages

FLOW 235-298

235	Table of Contents
236-241	Selection Guides
242-244	Typical Applications
245	Technical Information
246-298	Product Pages

LEVEL 299-340

299	Table of Contents
300-303	Selection Guides
304-305	Typical Applications
306-340	Product Pages

PROCESS CONTROL 341-376

341	Table of Contents
342-345	Selection Guides
346-347	Typical Applications
348-376	Product Pages

VALVES 377-446

377	Table of Contents
378-381	Selection Guides
382	Typical Applications
383	Technical Information
384-446	Product Pages

ACCESSORIES 447-455

447	Table of Contents
448-455	Product Pages

TECH GUIDE 456-461

456-457	Glossary
458-460	Reference Tables
461	Trademark Acknowledgments

INDEX 462-476

462-467	Index - By Product
468-476	Index - By Category

RECENT INNOVATIONS

STABILI*SENSE*™ CRITICAL ROOM STATUS MONTOR | SERIES RSMC

- Long-term stable pressure measurements with integrated capcell pressure sensor
- Color-changing edge light and full color 4.3˝ touchscreen LCD incorporate color status indication: green for good, orange for warning, and red for alarm

PAGE 62

ROOM STATUS MONITOR | SERIES RSME

- Displays up to 4 parameters including pressure, relative humidity, temperature, air change per hour (ACH), and/or door status
- Full color 4.3˝ touchscreen LCD incorporates color status indication: green for good, orange for warning, and red for alarm

PAGE 63

STABILI*SENSE*™ CRITICAL ROOM PRESSURE MONITOR | SERIES RPMC

- Long-term stable pressure measurements with integrated capcell pressure sensor
- Visual LED alarms provide immediate local alert allowing corrective action to be taken quicker to eliminate the problem from becoming widespread

PAGE 64

MAGNESENSE® DIFFERENTIAL PRESSURE TRANSMITTER | SERIES MSX PRO

- Supports exacting measurement and control for critical environments through precision accuracy
- Adds safety to a variety of applications that need to meet municipal and building code standards with UL94 V-0 and plenum ratings

PAGE 70

MAGNESENSE® DIFFERENTIAL PRESSURE TRANSMITTER | SERIES MSX

- Read LCD values easier with rotatable 180° display
- Quick and easy wiring via the optional toolless terminal block

PAGE 71

COMMUNICATING CARBON DIOXIDE SENSOR | SERIES CDTC

- Application/installation flexibility through network communication via BACnet or Modbus®
- Reduces drift associated with light source aging by utilizing reliable readings from a dual-channel NDIR sensor

PAGE 228

Modbus® is a registered trademark of Schneider Automation, Inc.

THERMAL DISPERSION FLOW TRANSMITTER | MODEL TDFT

- Long product life with no moving parts to wear
- Meets demanding applications with low flow measurement capability

PAGE 277

RECENT INNOVATIONS

VERTICAL WATER METERS | SERIES WVT

- Accurate flow measurement in vertical and horizontal orientations
- Prevents corrosion and chemical damage with polymer material

PAGE 284

MULTI-JET NSF CERTIFIED PLASTIC WATER METER | SERIES WPTN

- Use for potable application with plastic, NSF certified body
- Meets application accuracy with multi-jet design which allows use in low flow applications

PAGE 285

COMPACT ULTRASONIC FLOWMETER | SERIES UFM2

- Saves on installation costs with non-invasive pipe measurement
- Simplified installation with all necessary components included, such as: converter, sensor, cables, and mounting accessories
- Easily installs with compact and lightweight clamp-on unit

PAGE 287

CLAMP-ON ULTRASONIC THERMAL ENERGY METER | SERIES UBT

- Saves on installation costs with non-invasive pipe measurement
- Simplified installation with all necessary components included such as converter, sensor, cables and mounting accessories
- Easily installs with compact and lightweight clamp-on unit

PAGE 289

INSERTION THERMAL ENERGY METER | SERIES IEFB

- Field configurable
- Integral or remote display for ultimate flexibility
- Complies with high accuracy requirements of EN 1434-1, ASTM E3137, CSA C900.1-13 for accurate heat measurement

PAGES 292-293

DIGITAL FLOW METER | SERIES DFM

- Saves time with quick response rate
- Flexible application usage with up to 90 different user selectable gases and gas mixes

PAGE 295

DIGITAL FLOW CONTROLLER | SERIES DFC

- Saves time with quick response rate
- Flexible application usage with up to 90 different user selectable gases and gas mixes

PAGE 297

STANDARD TERMS & CONDITIONS OF SALE

DWYER INSTRUMENTS, LLC - TERMS AND CONDITIONS OF SALE – JANUARY 5, 2022

1. **Prices and Specifications** are subject to change without notice.

2. **Shipping dates** are approximate. They are dependent upon credit approval and subject to delays beyond our control.

3. **Terms:** Net 30 days to companies with established credit rating. In the event Buyer fails to fulfill previous terms of payment, or in case Seller shall have any doubt at any time as to Buyer's financial responsibility, Seller may decline to make further deliveries except upon receipt of cash in advance or other special arrangements.

4. **Point and Title:** All material is sold EXW Ex Works Dwyer Instruments, LLC Title to all material sold shall pass to buyer upon delivery by Seller to carrier at shipping point.

5. **State and Local Taxes:** Any taxes which the Seller may be required to pay or collect upon or with respect to the sale, purchase, delivery, use or consumption of any of the material covered hereby shall be for the account of the Buyer and shall be added to the purchase price.

6. **Special tooling**, dies, silk screens and molds acquired specially to produce goods for Buyer remain the property of Dwyer Instruments, LLC, and may not be removed. They will be maintained in good condition for a minimum period of three years from the date of the original purchase order.

7. **Trade Compliance:** Buyer acknowledges that the products, software, and technology, including technical information and documents (collectively "Items"), of Dwyer Instruments, LLC, are subject to regulation by agencies of the U.S. government including, but not limited to, the U.S. Department of Commerce. Buyer shall comply with the Export Administration Regulations (EAR) and all applicable U.S.laws and regulations regarding the sale, delivery and transfer of said Items. Buyer shall not, without first obtaining the required licenses, authorizations or approvals from the appropriate U.S. government agency; (i) export, re-export, transfer or divert any Item directly or indirectly to any country or national resident thereof, or any person, entity or country that has restrictions imposed upon them by the U.S. government, (ii) engage in, or knowingly sell to any party engaged in activity related to the development, production, use, testing, or maintenance of Weapons of Mass Destruction, including uses related to nuclear, missile, chemical or biological warfare, or (iii) engage in, or knowingly sell to any party engaged in activity related to the development, production, use, or maintenance of any safeguarded or unsafeguarded nuclear fuel facility or components for such facilities. Buyer shall fully cooperate with Seller, without charge, in any official audit or inspection by an authorized agent, official, employee, or accredited representative of the U.S. government. Buyer shall indemnify and hold Seller harmless from, or in connection with, any violation of this Section by Buyer, its employees, consultants, agents, or customers. The obligations, requirements and claims described herein shall survive the expiration of any business relationship with Dwyer Instruments, LLC, including its divisions, subsidiaries and affiliated companies.

8. **Distribution:** Products sold to any entity located in the U.S. must remain in the U.S. unless a Global Distribution Agreement is in force with said entity. OEM's are excluded from this requirement. Those who violate this term are subject to a reduction of discount, loss of discount, or exclusion from purchasing future products. If you want to be a Global Distributor, please contact your Global Sales Manager in your region.

9. **Limited Warranty:** The Seller warrants all Dwyer instruments and equipment to be free from defects in workmanship or material under normal use and service for a period of one year from date of shipment. Products qualifying for an extended warranty period will have the extended warranty as expressly indicated on the catalog page, web page, IOM, or will be covered by a specific written agreement that is (i) approved by an officer of Dwyer Instruments, LLC and (ii) defines the warranty period. If no express statement of extended warranty is made, then the standard 1 year warranty applies. The Extended Limited Warranty only applies to products manufactured after April 1, 2017. The Warranty period extends from the date of shipment to the initial customer and not the project installation date or use.

   Specific warranty exclusions include, but are not limited to:
   - Specific product components not covered by the extended warranty:
     - o Humidity Sensors
     - o Batteries
     - o Electro-Chemical Gas Sensors
     - o Snap Switches
     - o Any component which exceed its normal life cycle
     - o Other Specific items added as required.
   - Normal or excessive wear and tear is not cause for warranty replacement.
   - Products not properly maintained, operated, installed, or use in an application not suited for the product.
   - Modifications, alterations, changes, or additions outside those which are required for normal operation.
   - Failure to notify Dwyer of any defect within a reasonable time.
   - Damage which the customer has not taken timely action to minimize or mitigate.
   - Products on which the labels, markings, nameplates, etc. have been tampered with.
   - Products which contain broken factory seals or have been tampered with shall void warranty.

   Liability under this warranty is limited to repair or replacement EXW Ex Works Dwyer Instruments, LLC of any parts which prove to be defective within that time or repayment of the purchase price at the Seller's option. All products must be returned to the Seller, transportation prepaid, unless other arrangements have been pre-approved by Seller. All technical advice, recommendations and services are based on technical data and information which the Seller believes to be reliable and are intended for use by persons having skill and knowledge of the business, at their own discretion. In no case is Seller liable beyond replacement of equipment EXW Ex Works Dwyer Instruments, LLC or the full purchase price. This warranty does not apply if the maximum ratings label is removed or if the instrument or equipment is abused, altered, used at ratings above the maximum specified, or otherwise misused in any way.
   THIS EXPRESS LIMITED WARRANTY IS IN LIEU OF AND EXCLUDES ALL OTHER REPRESENTATIONS MADE BY ADVERTISEMENTS OR BY AGENTS AND ALL OTHER WARRANTIES, BOTH EXPRESS AND IMPLIED. THERE ARE NO IMPLIED WARRANTIES OF MERCHANTABILITY OR OF FITNESS FOR A PARTICULAR PURPOSE FOR GOODS COVERED HEREUNDER.

10. **Buyer's Remedies:** THE BUYER'S EXCLUSIVE AND SOLE REMEDY ON ACCOUNT OF OR IN RESPECT TO THE FURNISHING OF NON-CONFORMING OR DEFECTIVE MATERIAL SHALL BE TO SECURE REPLACEMENT THEREOF AS AFORESAID. THE SELLER SHALL NOT IN ANY EVENT BE LIABLE FOR THE COST OF ANY LABOR EXPENDED ON ANY SUCH MATERIAL OR FOR ANY SPECIAL, DIRECT, INDIRECT, CONSEQUENTIAL OR INCIDENTAL DAMAGES TO ANYONE BY REASON OF THE FACT THAT IT SHALL HAVE BEEN NON-CONFORMING OR DEFECTIVE.

11. **Acceptance:** All orders shall be subject to the terms and conditions contained or referred to in the Seller's quotation, acknowledgment, and to those listed here and to no others whatsoever. By placing an order you accept our terms and conditions. No waiver, alteration or modification of these terms and conditions shall be binding unless in writing and signed by an executive officer of the Seller. All orders are subject to written acceptance by Dwyer Instruments, LLC, Michigan City, Indiana, U.S.A.

SELECTION GUIDE
pages 2-15

TYPICAL APPLICATIONS
pages 16-17

PRESSURE SENSOR ACCURACY
pages 18-19

Differential Pressure Gages
pages 20-27, 31-33

Manometers, Stationary
pages 28-30

Differential Pressure Gages/Switches, Transmitters
pages 34-37

Differential Pressure Gages/Switches, Dial
pages 38-44

Differential Pressure Switches
pages 45-57

Differential Pressure Transmitters, Air & Gas
pages 58-61, 65-72

Room Status Monitors
pages 61-64

Differential Pressure Transmitters, Liquid & Gas
pages 73-81

Single Pressure Gages, Dial
page 81

Single Pressure Gages, Digital
pages 82-84

Single Pressure Gages/ Switches/Transmitters, Digital
pages 85-87

Single Pressure Switches
pages 88-96

Single Pressure Transmitters
pages 96-108

FEATURED PRODUCTS

DIFFERENTIAL PRESSURE TRANSMITTER

SERIES 629HLP | page 79

- Rugged, versatile, high accuracy device
- Compact, lightweight, capable to be installed in any arrangement making installation very simple

INDUSTRIAL PRESSURE TRANSMITTER

SERIES 626 & 628 | pages 100-101

- High precision transmitter ensures stability and control to meet the needs of the most demanding applications
- Wide selection of models, ranges, accuracy, connections, and outputs to meet exacting pressure measurement specifications

Dwyer

DIFFERENTIAL PRESSURE
Pressure Gages

SERIES	2000* - pages 20-21	DM-1000* - page 25	2-5000* - pages 26-27
Ranges	-0.05 to 0.2 in w.c. (-10 to 50 Pa) up to 0 to 30 psi (0 to 30 kPa) (Bi-directional ranges available)	0.25 to 100 in w.c. (60 Pa to 24.88 kPa) (Bi-directional ranges available)	0.5 in w.c. to 5 psi (125 Pa to 3 kPa)
Service	Air and non-combustible, compatible gases	Air and non-combustible, compatible gases	Air and compatible gases
Wetted Materials	Consult factory	Consult factory	Consult factory
Housing	Die cast aluminum case and bezel	Glass filled plastic	Glass filled nylon
Lens	Clear acrylic	N/A	Clear acrylic
Accuracy	±2 to 4% FS for most models. ±1 to 2% FS with HA option	±1% FS (2% FS for ranges 1 in w.c. and below)	±5% FS
Pressure Limits	-20″ Hg to 15 psig (-0.677 bar to 1.034 bar); MP option: 35 psig (2.41 bar); HP option: 80 psig (5.52 bar).	2 psi (14 kPa) for ≤5 in w.c. 11 psi (75 kPa) for ≥10 in w.c.	30 psig (2.067 bar)
Temperature Limits	20 to 140°F (-6.67 to 60°C)	0 to 140°F (-18 to 60°C)	20 to 120°F (-6.67 to 48.9°C)
Process Connection	1/8″ female NPT duplicate high and low pressure taps	1/8″ (3 mm) ID tubing	Barbed for 3/16″ ID tubing or 1/8″ male NPT
Enclosure Rating	IP67	NEMA 4X (IP66)	N/A

DIFFERENTIAL PRESSURE
Bezels

SERIES	2000-SS* - page 22	2000-SB* - page 22	2000-CB* - page 22	DH3-SS*/3000MR(S)-SS*/ 605-SS* - pages 36, 42 & 67
Material	304 brushed SS	304 SS	Chrome plated aluminum	304 brushed SS
Dimensions	4-3/4″ (120.7 mm) OD	4-3/4″ (120.7 mm) OD	4-3/4″ (120.7 mm) OD	4-3/4″ (120.7 mm) OD
Aesthetics/Function	Tapered brushed/matte SS finish	Electro polished Ra 16	Chrome finish	Tapered brushed/matte SS finish
Part Sold Separately	Yes	Yes	Yes	Yes
Part Number	420141-40	420141-10	420141-00	815999-10

***CALIBRATION SERVICES AVAILABLE**

These Selection Guides are for quick comparison of similar products. Please refer to the catalog page number referenced for complete product information and specifications.

DIFFERENTIAL PRESSURE
Pressure Gages

SERIES	4000* - page 31	PTGD* - page 32	PFG2* - page 33
Ranges	0 to 5 in w.c. up to 0 to 20 psid	5 to 150 psid (0.25 to 10 bar)	5 to 25 psid
Service	Air and compatible gases and oil based liquids	Compatible gases and liquids	Liquids/gases compatible with SS, GFN, and fluoropolymer
Wetted Materials	Consult factory	Aluminum or 316 SS piston; Buna-N, PTFE, or ceramic magnet seals	Aluminum mounting block
Housing	Die cast aluminum with impregnated hard coating	Aluminum or 316 SS	Glass filled nylon
Lens	N/A	Acrylic	Polyester
Accuracy	±3% FS (±2% or 4% for certain ranges)	±2% FS	±5% FS
Pressure Limits	-20″ Hg to 500 psig (-0.68 to 34.4 bar)	Aluminum: 3000 psi (206 bar); SS: 6000 psi (413 bar)	300 psig (20.7 bar)
Temperature Limits	20 to 200°F (-6.7 to 93.3°C)	N/A	200°F (93°C)
Process Connection	1/4″ female NPT duplicate high and low pressure taps	1/4″ female NPT	1/8″ female NPT
Enclosure Rating	N/A	N/A	N/A

DIFFERENTIAL PRESSURE
Accessories

MODEL	AHU1/2 - page 22	A-464 - page 23	A-320-A - page 23	Scale Customization - Consult Factory
Accessory	Surface mounting kit	Flush mounting kit	Enclosure	Customized logos/company name
Material	ABS plastic	White ABS plastic	ABS	Printed on aluminum scale
Dimensions	4-1/2″ x 4-1/2″	6-1/2″ x 6-1/2″	4-23/32″ x 3-37/64″ x 6-19/64″	As per customer requirement
Enclosure Rating	N/A	N/A	NEMA 1 (IP10)	N/A
Mounting Orientation	Surface	Flush	Wall	N/A
Aesthetics/Function	Quick Install accessory	Cleanroom mount	Quick install kit	Customize your application
Part Sold Separately	Yes	Yes	Yes	N/A
Part Number	A-607/A-607 with A-481	A-464	A-320-A	N/A

***CALIBRATION SERVICES AVAILABLE**

These Selection Guides are for quick comparison of similar products. Please refer to the catalog page number referenced for complete product information and specifications.

Dwyer

DIFFERENTIAL PRESSURE
Pressure Gages/Switches

SERIES	DHII* - page 34	DH* - page 35	DH3* - page 36	A3000* - pages 38-39
Ranges	0.25 to 100 in w.c. (60 Pa to 24.88 kPa) (Bi-directional ranges available)	0.25 to 100 in w.c. (60 Pa to 24.88 kPa) (Bi-directional ranges available)	0.25 to 100 in w.c. (60 Pa to 24.88 kPa) (Bi-directional ranges available)	0 to 0.25 in w.c. (0 to 60 Pa) up to 0 to 150 in w.c. (0 to 30 kPa)
Service	Air and non-combustible, compatible gases	Air and non-combustible, compatible gases	Air and non-combustible, compatible gases	Air and non-combustible, compatible gases
Wetted Materials	Consult factory	Consult factory	Consult factory	Consult factory
Housing	Aluminum, glass	ABS plastic, UL approved 94 V-0	Die cast aluminum case and bezel	N/A
Switch Type	(2) SPDT	(2) SPDT	(2) SPDT	(2) DPDT
Accuracy	±0.5% FS	±0.5% FS	±0.5% FS (±1% or ±1.5 for certain ranges)	±2% FS (±3% or 4% for certain ranges)
Pressure Limits	2 psi (≤2.5 in w.c.); 5 psi (5 to 50 in w.c.); 9 psi (100 in w.c.)	2 psi (≤2.5 in w.c.); 5 psi (5 to 50 in w.c.); 9 psi (100 in w.c.)	2 psi (≤2.5 in w.c.); 5 psi (5 to 50 in w.c.); 9 psi (100 in w.c.)	-20″ Hg to 25 psig (-0.677 bar to 1.72 bar); MP option: 35 psig (2.41 bar); HP option: 80 psig (5.52 bar).
Temperature Limits	32 to 140°F (0 to 60°C)	32 to 140°F (0 to 60°C)	32 to 140°F (0 to 60°C)	20 to 120°F (-6.67 to 48.9°C)
Process Connection	1/8″ female NPT	Compression fitting for 1/8″ ID tubing or barbed fitting for 3/16″ ID tubing	1/8″ female NPT	1/8″ female NPT
Enclosure Rating	NEMA 4 (IP66)	NEMA 4X (IP66)	N/A	N/A

LOW DIFFERENTIAL PRESSURE
Pressure Switches

SERIES	ADPS - page 45	EDPS - page 45	1800 - page 47	1900 - page 49
Set Point Range	.08 to 20 in w.c. (20 to 5000 Pa)	.08 to 20 in w.c. (20 to 5000 Pa)	.07 to 85 in w.c. (.017 to 21 kPa)	.07 to 20 in w.c. (.017 to 5 kPa)
Service	Compatible gases	Compatible gases	Compatible gases	Compatible gases
Wetted Materials	Silicone, PA 6.6, and Polystyrene	Silicone, PA 6.6, and materials UL 94 V-0 rated	Consult factory	Consult factory
Temperature Limits	-4 to 185°F (-20 to 85°C)	-4 to 185°F (-20 to 85°C)	-30 to 180°F (-34 to 82°C)	-30 to 180°F (-34 to 82°C)
Pressure Limits	40 in w.c. (10 kPa)	40 in w.c. (10 kPa)	10 psig (69 kPa)	45 in w.c. (11.2 kPa)
Power Requirement	None	None	None	None
Repeatability	1%	1%	2%	3%
Adjustable Deadband	No	No	No	No
Set Point Indication	Yes	Yes	No	No
Enclosure Rating	GP	UL 94 V-0 rated	GP, WP, or EXP	GP, WP, or EXP
Switch Type	SPDT	SPDT	SPDT	SPDT
Multiple Stages	No	No	No	No
Process Connection	Hose connection for 5/16″ OD and 1/4″ ID tubing	Hose connection for 5/16″ OD and 1/4″ ID tubing	1/8″ female NPT	1/8″ female NPT

***CALIBRATION SERVICES AVAILABLE**

These Selection Guides are for quick comparison of similar products. Please refer to the catalog page number referenced for complete product information and specifications.

DIFFERENTIAL PRESSURE
Pressure Gages/Switches

SERIES	43000* - page 41	3000MR* - page 42	3000MRS* - page 42	MP* - page 44
Ranges	0 to 0.5 in w.c. up to 0 to 500 in w.c.	0 to 0.25 in w.c. (0 to 60 Pa) up to 0 to 100 in w.c. (0 to 4 kPa)	0 to 0.25 in w.c. (0 to 60 Pa) up to 0 to 100 in w.c. (0 to 4 kPa)	0 to 0.5 in w.c. (0 to 125 kPa) up to 0 to 20 in w.c. (0 to 3 kPa)
Service	Compatible gases and liquids	Air and non-combustible compatible gases	Air and non-combustible compatible gases	Air and non-combustible, compatible gases
Wetted Materials	Consult factory	Consult factory	Consult factory	Consult factory
Housing	N/A	N/A	N/A	N/A
Switch Type	(2) DPDT	SPDT	Solid state relay	(2) SPDT
Accuracy	±3% FS (±4% for certain ranges)	±2% FS (±3% or 4% for certain ranges)	±2% FS (±3% or 4% for certain ranges)	±5% FS
Pressure Limits	-20″ Hg to 500 psig (-0.677 bar to 34.5 bar)	-20″ Hg to 25 psig (-0.677 bar to 1.72 bar)	-20″ Hg to 25 psig (-0.677 bar to 1.72 bar)	30 psig (2.067 bar)
Temperature Limits	20 to 120°F (-6.67 to 48.9°C)	20 to 120°F (-6.67 to 48.9°C)	20 to 120°F (-6.67 to 48.9°C)	20 to 120°F (-6.67 to 49°C)
Process Connection	1/4″ female NPT	1/8″ female NPT	1/8″ female NPT	Barbed for 3/16″ ID tubing or 1/8″ male NPT
Enclosure Rating	N/A	N/A	N/A	N/A

LOW DIFFERENTIAL PRESSURE
Pressure Switches

SERIES	MDS - page 51	MDA - page 51	1831 - page 52	1640 - page 52
Set Point Range	.5 to 50 in w.c. (.12 to 12.5 kPa)	.1 to 100 in w.c. (.25 to 249.1 mbar)	2.5 to 23 in w.c. (.62 to 5.7 kPa)	.01 to 12 in w.c. (.003 to 3 kPa)
Service	Air or compatible fluids on “high side”	Air or compatible fluids on “high side”	Compatible gases	Compatible gases
Wetted Materials	Polycarbonate and polyurethane	Polycarbonate and polyurethane	Consult factory	Consult factory
Temperature Limits	40 to 150°F (4 to 66°C)	40 to 150°F (4 to 66°C)	-30 to 180°F (-34 to 82°C)	-30 to 110°F (-34 to 43°C)
Pressure Limits	15 psig (1 bar)	15 psig (1 bar)	10 psig (69 kPa)	10 psig (69 kPa)
Power Requirement	None	None	None	None
Repeatability	Consult factory	Consult factory	4%	Consult factory
Adjustable Deadband	No	No	No	No
Set Point Indication	No	No	No	Yes
Enclosure Rating	GP	GP	GP	GP, WP, or EXP
Switch Type	SPST NO	SPST NO	DPDT	SPDT
Multiple Stages	No	No	No	Yes
Process Connection	Hose barb for 1/8″-3/16″ ID tubing	Smooth port for 1/8″ ID tubing	1/8″ female NPT	1/8″ female NPT

***CALIBRATION SERVICES AVAILABLE**

These Selection Guides are for quick comparison of similar products. Please refer to the catalog page number referenced for complete product information and specifications.

Dwyer

LOW DIFFERENTIAL PRESSURE
Pressure Switches

SERIES	1620 - page 53	1630 - page 53	PG - page 54	1950 - page 55
Set Point Range	.15 to 24 in w.c. (.04 to 6 kPa)	.05 to 12 in w.c. (.012 to 3 kPa)	1 in w.c. to 5 psig (.25 kPa to 3.4 bar)	.03 to 20 in w.c. (.007 to 5 kPa)
Service	Compatible gases	Compatible gases	Compatible gases	Compatible gases
Wetted Materials	Consult factory	Consult factory	Fairprene, brass, steel, and aluminum	Consult factory
Temperature Limits	-30 to 130°F (-34 to 54°C)	-30 to 110°F (-34 to 43°C)	-10 to 180°F (-23 to 82°C)	-40 to 140°F (-40 to 60°C)
Pressure Limits	50 in w.c. (12.41 kPa)	10 psig (69 kPa)	Consult factory	45 in w.c. (11.2 kPa)
Power Requirement	None	None	None	None
Repeatability	1%	1%	1%	Consult factory
Adjustable Deadband	No	No	No	No
Set Point Indication	No	Yes	Yes	No
Enclosure Rating	GP and WP	GP and WP	GP, WP, or EXP	WP and EXP
Switch Type	(2) SPDT	SPDT	SPDT or DPDT	SPDT
Multiple Stages	Yes	No	No	No
Process Connection	1/8″ female NPT	1/8″ female NPT	1/8″ female and 1/2″ male NPT	1/8″ female NPT

LOW DIFFERENTIAL PRESSURE - NON-INDICATING
Pressure Transmitters and Transducers

SERIES	616KD* - page 58	616KD-LR* - page 59	608* - page 76
Ranges	1 to 20 in w.c. (250 to 5000 Pa) to 5000 Pa (Bi-directional available)	0.1 to 0.5 in w.c. (25 to 125 Pa) bi-directional 0 to ±0.5″ (0 to ±125 Pa)	0.1 to 25 in w.c. (25 to 6200 Pa) (Bi-directional available)
Accuracy	616KD-A: ±0.25% FS; 616KD-B: ±1% FS; 616KD-C: ±2% FS	±0.25% FS for ±0.4″ (100 Pa) and ±0.5″ (125 Pa), ±0.5% FS for ±0.25″ (60 Pa), and ±1% FS for ±0.1″ (25 Pa)	±0.5% or ±0.25% FS
Wetted Materials	Consult factory	Consult factory	Consult factory
Comp. Temp. Limits	20 to 122°F (-6.67 to 50°C)	20 to 122°F (-6.67 to 50°C)	0 to 160°F (-18 to 71°C)
Oper. Temp. Limits	0 to 140°F (-17.8 to 60°C)	0 to 140°F (-17.8 to 60°C)	-20 to 185°F (-28 to 85°C)
Output Signal	4 -20 mA or field selectable 0 to 10/0 to 5/2 to 10/1 to 5 V	4-20 mA (2-wire), 0-5 VDC, 0-10 VDC (3-wire)	4-20 mA
Elec. Connection	Screw-type terminal block	Screw-type terminal block	Screw-type terminal block, Two 1/2″ female NPT conduit
Process Connection	Barbed for 1/8″ and 3/16″ ID rubber or vinyl tubing	Barbed, dual size to fit 1/8″ and 3/16″ (3 mm and 5 mm) ID rubber or vinyl tubing, or 1/8″ NPT	1/4″ female NPT
Enclosure Rating	NEMA 1 (IP20)	NEMA 1 (IP20)	NEMA 4X (IP66)

***CALIBRATION SERVICES AVAILABLE**

These Selection Guides are for quick comparison of similar products. Please refer to the catalog page number referenced for complete product information and specifications.

LOW DIFFERENTIAL PRESSURE
Pressure Switches

SERIES	1950G - page 55	H3 - page 56	DX - page 57
Set Point Range	.07 to 20 in w.c. (.017 to 5 kPa)	180 in w.c. to 200 psid (0.5 to 13.5 bar)	2.5 to 75 psi (.17 to 5.2 bar)
Service	Compatible gases	Compatible liquids or gases	Compatible liquids or gases
Wetted Materials	Consult factory	Aluminum/Nitrile or SS/ Fluoroelastomer	Brass and fluoroelastomer
Temperature Limits	0 to 140°F (-18 to 60°C)	-4 to 220°F (-20 to 104°F)	30 to 140°F (-1 to 60°C)
Pressure Limits	45 in w.c. (11.2 kPa)	1500 psig (103 bar)	200 psig (13.8 bar)
Power Requirement	24 VDC, 120 or 240 VAC	None	None
Repeatability	Consult factory	Consult factory	2%
Adjustable Deadband	No	No	Yes
Set Point Indication	No	No	No
Enclosure Rating	WP and EXP	EP	WP
Switch Type	SPDT	SPDT or DPDT	SPDT
Multiple Stages	No	No	No
Process Connection	1/8″ female NPT	1/8″ female NPT	1/4″ female NPT

CRITICAL, LOW PRESSURE
Room Pressure Monitors

SERIES	RSMC* - page 62	RSME* - page 63	RPMC - page 64
Measurement Technology	Capacitance cell pressure sensor	Piezoresistive pressure sensor	Capacitance cell pressure sensor
Ranges	0-0.25 to 0-1 in w.c.	0-0.5 to 0-2 in w.c.	0-0.25 to 0-1 in w.c.
Inputs	Two (2) user-selectable 4-20 mA, 0-5 VDC, or 0-10 VDC; USB type C used for cloning programming; One (1) digital input for door status	Two (2) user-selectable 4-20 mA, 0-5 VDC, or 0-10 VDC; USB type C used for cloning programming; One (1) digital input for door status	N/A
Outputs	One (1) digital output (DO) rated 5 A @ 30 VDC; One (1) 4-20 mA or 0-10 V (user selectable) corresponding to internal pressure or retransmission of any input	One (1) digital output (DO) rated 5 A @ 30 VDC; One (1) 4-20 mA or 0-10 V (user selectable) corresponding to internal pressure or retransmission of any input	4-20 mA, 2 SPDT programmable relays
Display	4.3″ (10.9 cm) color TFT LCD, dimmable; 480 x 272 resolution and edge light indication	4.3″ (10.9 cm) color TFT LCD, dimmable; 480 x 272 resolution	Backlit 4 digit LCD 0.4″ height LED indicators for set point and alarm status
Communications	Modbus® RTU, BACnet MS/TP	Modbus® RTU, BACnet MS/TP	N/A

Modbus® is a registered trademark of Schneider Automation, Inc.

***CALIBRATION SERVICES AVAILABLE**

These Selection Guides are for quick comparison of similar products. Please refer to the catalog page number referenced for complete product information and specifications.

Dwyer

LOW DIFFERENTIAL PRESSURE – INDICATING

Pressure Transmitters and Transducers

SERIES	616W - page 60	DM-2000 - page 65	ISDP - page 66
Ranges	6 in w.c. to 2.5 kPa	.1 to 5 in w.c. (Bi-directional available)	0.1 to 100 in w.c. (Bi-directional available)
Accuracy	±0.25% FS, display accuracy ±0.5%	±1% FS	±0.5% FS
Wetted Materials	Consult factory	Consult factory	Consult factory
Comp. Temp. Limits	N/A	N/A	32 to 140°F (0 to 60°C)
Oper. Temp. Limits	0 to 150°F (-17.8 to 66°C)	20 to 120°F (-7 to 49°C)	32 to 140°F (0 to 60°C)
Output Signal	4-20 mA (2-wire), 0-5 VDC, or 0-10 VDC (3-wire)	4-20 mA	4-20 mA DC
Elec. Connection	3-wire terminal block for 16 to 26 AWG	Screw-type terminal block	M-12 4-pin connector
Process Connection	Barbed for 1/8″ and 3/16″ ID rubber or vinyl tubing	1/8″ ID tubing	1/8″ female NPT
Enclosure Rating	NEMA 4X (IP66)	N/A	NEMA 4X (IP66)

WET-WET DIFFERENTIAL PRESSURE

Pressure Transmitters and Transducers

SERIES	3100D - pages 74-75	636D - page 77	629C - page 78	629C-3V - page 78
				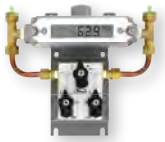
Ranges	6 in w.c. to 0-1000 psig	15 to 300 psi	5 to 500 psid (0.5 to 30 bar)	5 to 500 psid (0.5 to 30 bar)
Accuracy	±0.075% FS	±0.5% FS	±0.50% FS	±0.50% FS
Wetted Materials	316L SS	316L SS	316, 316L SS	316, 316L SS, Brass 360, Copper, Reinforced acetal copolymer
Comp. Temp. Limits	N/A	-20 to 180°F (-29 to 82°C)	0 to 175°F (-18 to 79°C)	0 to 175°F (-18 to 79°C)
Oper. Temp. Limits	-40 to 185°F (-40 to 85°C)	-40 to 212°F (-40 to 100°C)	0 to 200°F (-18 to 93°C)	0 to 200°F (-18 to 93°C)
Output Signal	4-20 mA or HART® Communication	4-20 mA or 1 to 5 VDC	2-wire: 4-20 mA; 3-wire: Selectable 0-5, 1-5, 0-10, or 2-10 VDC	2-wire: 4-20 mA; 3-wire: Selectable 0-5, 1-5, 0-10, or 2-10 VDC
Elec. Connection	(2) 1/2″ female NPT conduit, screw terminal	2′ (61 cm) cable, 3/4″ female NPT conduit	Screw-type removable terminal block; 1/2″ female NPT conduit	Screw-type removable terminal block; 1/2″ female NPT conduit
Process Connection	1/4″ female NPT	1/2″ female NPT	1/4″ female NPT	1/4″ female NPT
Enclosure Rating	NEMA 4X (IP66)	NEMA 4 (IP66)	NEMA 4X (IP66)	Non-LCD designed to meet NEMA 4X (IP66)

HART® is a registered trademark of Hart Communication Foundation

These Selection Guides are for quick comparison of similar products. Please refer to the catalog page number referenced for complete product information and specifications.

LOW DIFFERENTIAL PRESSURE - INDICATING

Pressure Transmitters and Transducers

SERIES	605 - page 67	MSX PRO - page 70	MSX - page 71
Ranges	Vacuum, .5 to 50 in w.c. (60 to 1500 Pa)	0.1 in w.c. to 28 in w.c. (25 Pa to 6975 Pa) (Bi-directional available)	0.1 in w.c. to 28 in w.c. (25 Pa to 6975 Pa) (Bi-directional available)
Accuracy	±0.5% or ±2% FS	±0.5% FSO for all ranges except unidirectional .5 in. @ ±1% FSO	±1% FSO
Wetted Materials	Consult factory	Consult factory	Consult factory
Comp. Temp. Limits	32 to 120°F (0 to 48.9°C)	N/A	N/A
Oper. Temp. Limits	20 to 120°F (-6.67 to 48.9°C)	-4 to 158°F (-20 to 70°C	-4 to 158°F (-20 to 70°C
Output Signal	4-20 mA	4-20 mA (2-wire); 0-10 V or 0-5 V selectable (3-wire)	4-20 mA (2-wire); 0-10 V or 0-5 V selectable (3-wire)
Electrical Connection	Screw-type terminal block	4-wire removable European style terminal block for 16 to 26 AWG	4-wire removable European style terminal block for 16 to 26 AWG
Process Connection	1/8″ female NPT	1/8″, 3/16″, 1/4″, 5 mm, and 6 mm ID flexible tubing	1/8″, 3/16″, 1/4″, 5 mm, and 6 mm ID flexible tubing
Enclosure Rating	N/A	NEMA 4X (IP66), UL 2043 (Plenum), UL94 V-0	NEMA 4X (IP66), UL 2043 (Plenum), UL94 V-0

WET-WET DIFFERENTIAL PRESSURE

Pressure Transmitters and Transducers

SERIES	629HLP - page 79	647 - page 80	645 - page 80	WWDP - page 81
	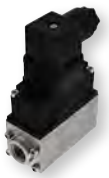			
Ranges	15 to 90 psi (1 to 6 bar)	1 in w.c. to 0-30 psid (245 Pa to 0-2.0 bar)	1 to 100 psid (0.07 to 6.5 bar) (Bi-directional ranges available)	5 to 250 psi
Accuracy	±1% FS	±1% FS	±0.25% FS	±1% FS
Wetted Materials	304 SS	Brass, vinyl, glass-filled polyester, silicon, florosilicone	17-4 PH SS, Fluoroelastomer, Silicone	Consult factory
Comp. Temp. Limits	-5 to 60°C (23 to 140°F)	N/A	30 to 150°F (-1 to 65°C)	32 to 130°F (0 to 54°C)
Oper. Temp. Limits	-10 to 80°C (14 to 176°F)	32 to 122°F (0 to 50°C)	0 to 175°F (-18 to 80°C)	-4 to 185°F (-20 to 85°C)
Output Signal	4-20 mA, 0-10 VDC	4-20 mA	4-20 mA	Selectable 0-5, 0-10, and 0-5 VDC; 4-20 mA
Elec. Connection	Form A DIN 43650	Screw-type terminal block	Screw-type terminal block	1/2″ conduit
Process Connection	1/4″ female NPT, 1/4″ female BSPT	1/8″ female NPT	1/4″ female NPT	1/8″ female NPT internal
Enclosure Rating	IP65	N/A	NEMA 4X (IP66)	NEMA 4 (IP66)

These Selection Guides are for quick comparison of similar products. Please refer to the catalog page number referenced for complete product information and specifications.

Dwyer

DIGITAL SINGLE PRESSURE

Pressure Gages

SERIES	DPGA* - page 82	DPGW* - page 82	DPG-000* - page 83	DPG-100* - page 83	DPG-200* - page 85
Ranges	-30″ Hg to 500 psig (-1.013 to 34.47 bar)	-30″ Hg to 500 psig (-1.013 to 34.47 bar)	-14.7 to 8000 psig (-1.0 to 550 bar)	-14.7 to 8000 psig (-1.0 to 550 bar)	5 to 8000 psig (0.3 to 550 bar)
Service	Air and compatible gases	Compatible gases/liquids	Compatible liquids and combustible gases	Compatible liquids and combustible gases	Liquids and non-combustible compatible gases
Wetted Materials	316L SS, silicone sensor	316L SS	Type 316L SS	Type 316L SS	Type 316L SS
Housing	ABS plastic	ABS plastic	Polycarbonate front and back cover, anodized aluminum housing, polycarbonate overlay, Buna-N O-rings, 316L SS sensor construction	Polycarbonate front and back cover, anodized aluminum housing, polycarbonate overlay, Buna-N O-rings, 316L SS sensor construction	Polycarbonate front and back cover, anodized aluminum housing, polycarbonate overlay, Buna-N O-rings, 316L SS sensor construction
Accuracy	±1% FS	±1% FS	±0.5% FS	±0.25% FS	±0.25% FS
Pressure Limits	200% FS; 30 psig for vacuum models	200% FS; 30 psig for vacuum models	200% FS (≤1000 psi); 5000 psi (3000 psi); 7500 psi (5000 psi)	200% FS (≤1000 psi); 5000 psi (3000 psi); 7500 psi (5000 psi)	200% FS (≤1000 psi); 5000 psi (3000 psi); 7500 psi (5000 psi)
Temperature Limits	30 to 120°F (-1 to 49°C)	30 to 120°F (-1 to 49°C)	0 to 130°F (-18 to 55°C)	0 to 130°F (-18 to 55°C)	0 to 158°F (-18 to 70°C)
Process Connection	1/4″ male NPT	1/4″ male NPT	1/4″ male NPT	1/4″ male NPT	1/4″ male NPT
Enclosure Rating	N/A	N/A	NEMA 4/4X (IP66)	NEMA 4/4X (IP66)	NEMA 4X (IP66)

***CALIBRATION SERVICES AVAILABLE**

These Selection Guides are for quick comparison of similar products. Please refer to the catalog page number referenced for complete product information and specifications.

HIGH SINGLE PRESSURE – INDICATING

Pressure Transmitters and Transducers

SERIES	DSGT* - page 85	EDA* - page 87	626/628-CB* - pages 100-101	IWP - page 103	3200G* - pages 104-105
Ranges	30 to 20,000 psig and compound ranges	20 to 3000 psig	Up to 300 psia, 8000 psig, 16 bar abs, 550 bar	30 to 1000 psig	-14.5 psig to 8500 psig
Accuracy	±0.25% FS	±1% FS	626: ±0.25% FS; 628: ±1% FS	±0.5% FS	±0.075% FS
Wetted Materials	17-4 SS, 316 SS	316L SS	316, 316L SS	304 and 316 SS	316L SS
Comp. Temp. Limits	N/A	32 to 122°F (0 to 50°C)	0 to 175°F (0 to 79°C)	-22 to 203°F (-30 to 95°C)	N/A
Oper. Temp. Limits	14 to 140°F (-10 to 60°C)	20 to 140°F (-6.6 to 60°C)	0 to 200°F (0 to 94°C)	32 to 158°F (0 to 70°C)	-40 to 185°F (-40 to 85°C)
Output Signal	4-20 mA	4-20 mA, 1-6 VDC, 1-5 VDC, 0-5 VDC, or 0-10 VDC	4-20 mA	4-20 mA	4-20 mA or HART® Communication
Elec. Connection	3´ flying leads	Screw-type removable terminal blocks with (2) 1/2″ female NPT conduit connections	Terminal block, 1/2″ female NPT conduit	1/2″ female NPT	(2) 1/2″ female NPT conduit, screw terminal
Process Connection	1/2″ male NPT	1/4″ male NPT, 1/4″ male BSPT, or 7/16″ SAE	1/4″ male or female NPT or BSPT	1/2″ female NPT	1/2″ female NPT
Enclosure Rating	NEMA 4X	NEMA 4X (IP66)	NEMA 4X (IP66)	IP65	NEMA 4X (IP66)

HART® is a registered trademark of Hart Communication Foundation

***CALIBRATION SERVICES AVAILABLE**

These Selection Guides are for quick comparison of similar products. Please refer to the catalog page number referenced for complete product information and specifications.

Dwyer

SINGLE PRESSURE
Pressure Switches

SERIES	EDA* - page 87	DA/DS - pages 88-89	SA1100 - page 90	1000W/E - page 91	A1F - page 92	A1PS/A1VS - page 93
Set Point Range	20 to 3000 psig (1.38 to 206 bar)	30″ Hg VAC to 8000 psig (762 mm Hg VAC to 551 bar)	10 to 500 psig (.7 to 34 bar)	5 to 1400 psig (.48 to 96.5 bar)	2 to 450 psig (.14 to 10.3 bar)	28″ Hg VAC to 500 psig (711 mm Hg VAC to 34.5 bar)
Service	Compatible liquids or gases	Compatible liquids or gases	Compatible liquids or gases	Compatible liquids or gases	Compatible liquids or gases	Compatible liquids or gases
Wetted Materials	316 SS	Brass, 403 SS, or 316 SS	Aluminum, brass, or 316 SS with Buna-N or fluorocarbon	Aluminum or 316 SS with polyamide, 316 SS, or Teflon®	Fluorocarbon and 316 SS	Zinc and Buna-N
Temperature Limits	20 to 140°F (-6.6 to 60°C)	-10 to 180°F (-23 to 82°C)	-30 to 180°F (-35 to 77°C)	-30 to 170°F (-35 to 77°C)	-40 to 175°F (-40 to 80°C)	-31 to 185°F (-35 to 85°C)
Pressure Limits	4500 psig (310 bar)	8000 psig (551 bar)	3000 psig (207 bar)	3000 psig (207 bar)	750 psig (51 bar)	600 psig (41 bar)
Power Requirement	12-30 VDC/AC	None	None	None	None	None
Repeatability	0.5%	1%	Consult factory	Consult factory	Consult factory	Consult factory
Adjustable Deadband	Yes	Yes	Yes	No	No	No
Set Point Indication	Yes	Yes	Yes	Yes	Yes	Yes
Enclosure Rating	WP	GP, WP, or EXP	WP and EXP	WP or EXP	GP or WP	GP
Switch Type	(2) SPDT	SPDT or DPDT	SPDT or DPDT	SPDT or DPDT	SPDT	SPDT
Multiple Stages	No	Yes	No	No	No	No
Process Connection	1/4″ male NPT	GP/WP: 1/4″ male NPT or 1/2″ male NPT; EXP: 1/2″ male NPT and 1/4″ female NPT	1/4″ or 1/2″ female NPT	1/4″ female NPT	1/4″ female and 1/2″ male NPT	1/4″ male NPT

Teflon® is a registered trademark of E.I. Dupont De Nemours and Company

***CALIBRATION SERVICES AVAILABLE**

These Selection Guides are for quick comparison of similar products. Please refer to the catalog page number referenced for complete product information and specifications.

SINGLE PRESSURE
Pressure Switches

SERIES	APS/AVS - page 93	A6 - page 94	AP - page 94	A2 - page 95	MVS - page 95	CXA - page 96
Set Point Range	28″ Hg VAC to 500 psig (711 mm Hg VAC to 34.5 bar)	.5 to 150 psig (.03 to 10.3 bar)	10 in w.c. VAC to 125 psig (2.5 kPa VAC to 8.6 bar)	5 to 150 psig (.34 to 10 bar)	3 to 330 in w.c. VAC (8 to 822 mbar VAC)	15 to 150 psig (1.0 to 10.3 bar)
Service	Compatible liquids or gases	Compatible liquids or gases	Compatible liquids or gases	Compatible liquids or gases	Compatible liquids or gases	Compatible liquids or gases
Wetted Materials	17-4 PH SS and 303 SS	Polyimide with brass or 304 SS	Steel and Buna-N 04 316 SS and Teflon®	Kapton® and brass	Polycarbonate and polyurethane	Silicone, steel, and SS
Temperature Limits	-65 to 225°F (-54 to 107°C)	-40 to 248°F (-40 to 120°C)	-30 to 150°F (-35 to 66°C)	-40 to 250°F (-40 to 121°C)	40 to 150°F (4 to 66°C)	140°F (60°C)
Pressure Limits	750 psig (51 bar)	500 psig (34 bar)	160 psig (11 bar)	500 psig (34 bar)	330 in w.c. (822 mbar)	204 psig (14.1 bar)
Power Requirement	None	None	None	None	None	None
Repeatability	Consult factory	±10%	Consult factory	5%	20%	±5 psig (.3 bar)
Adjustable Deadband	No	No	No	No	No	Yes
Set Point Indication	Yes	No	Yes	No	No	No
Enclosure Rating	GP	GP or WP	GP, WP, or EXP	GP or submersible	GP	GP
Switch Type	SPDT	(1) SPST NO and (1) SPST NC	SPDT or DPDT	SPST	SPDT	SPST NO or NC
Multiple Stages	No	No	No	No	No	No
Process Connection	1/8″ mail NPT	1/4″ male NPT	1/4″ female NPT	1/8″ male NPT	Consult factory	1/4″ female NPT

Teflon® is a registered trademark of E.I. Dupont De Nemours and Company

These Selection Guides are for quick comparison of similar products. Please refer to the catalog page number referenced for complete product information and specifications.

Dwyer

HIGH SINGLE PRESSURE - NON-INDICATING

Pressure Transmitters and Transducers

SERIES	**681*** - page 96	**638R** - page 97	**682** - page 98	**673*** - page 99
Ranges	1 to 100 psi	75 to 667 psia (5.2 to 46 bar(a))	25 to 10,000 psi	Compound, 1 to 1000 psi
Accuracy	±0.20% FS	±1.2% FS	±0.13% FS	±0.25% FS
Wetted Materials	316L SS	Brass, aluminum, or 316 SS	17-4 PH SS	17-4 PH SS
Comp. Temp. Limits	20 to 180°F (-7 to 80°C)	-40 to 275°F (-40 to 135°C)	-4 to 176°F (-20 to 80°C)	4 to 212°F (-20 to 100°C)
Oper. Temp. Limits	-40 to 260°F (-40 to 125°C)	-40 to 275°F (-40 to 135°C)	-40 to 260°F (-40 to 125°C)	-40 to 260°F (-40 to 125°C)
Output Signal	4-20 mA	0.5-4.5 VDC ratiometric	4-20 mA	4-20 mA
Elec. Connection	15 ft (4.5 m) multi-conduit cable	Packard connection	2 ft (61 cm) multi-conductor cable	2 ft (61 cm) multi-conductor cable
Process Connection	1-1/2″ or 2″ sanitary clamp	7/16″ 20 UNF (female) or 1/4″ NPT (female)	1/4″ male or female NPT or BSPT	1/4″ male NPT
Enclosure Rating	NEMA 4X (IP66)	IP67	NEMA 4X (IP66)	NEMA 4X (IP66)

***CALIBRATION SERVICES AVAILABLE**

These Selection Guides are for quick comparison of similar products. Please refer to the catalog page number referenced for complete product information and specifications.

HIGH SINGLE PRESSURE - NON-INDICATING

Pressure Transmitters and Transducers

SERIES	FDT* - page 99	626/628-GH* - pages 100-101	636* - page 102	IS626* - page 108
Ranges	100 to 10,000 psi (7 to 690 bar)	Up to 300 psia, 8000 psig, 16 bar abs, 550 bar	15 to 300 psi (1 to 20 bar)	15 to 8000 psig (1 to 550 bar); 15 to 30 psia (1 to 3 bara)
Accuracy	±0.5% FS	626: ±0.25% FS; 628: ±1% FS	±0.30% FS	±0.25% FS; 0.5% FS for absolute ranges
Wetted Materials	316 and 15-5 SS	316, 316L SS	316L SS	316 and 316L SS
Comp. Temp. Limits	0 to 170°F (-18 to 77°C)	0 to 175°F (0 to 79°C)	-20 to 180°F (-29 to 82°C)	0 to 176°F (-18 to 80°C)
Oper. Temp. Limits	-40 to 200°F (-40 to 93°C)	0 to 200°F (0 to 94°C)	-40 to 212°F (-40 to 100°C)	0 to 176°F (-18 to 80°C)
Output Signal	4-20 mA or 0-5 VDC	4-20 mA	4-20 mA or 1-5 VDC	4-20 mA
Elec. Connection	4-pin	Cable, DIN connector, or 4-pin M12	2 ft (61 cm) cable, 3/4″ female NPT conduit	3´ cable or 4-pin M-12 connector
Process Connection	7/16-20 UNF male flush diaphragm; 1/4″ male NPT	1/4″ male or female NPT or BSPT	1/2″ female NPT	1/4″ male or female NPT or BSPT
Enclosure Rating	NEMA 4X (IP66)	NEMA 4X (IP66)	NEMA 4X (IP66)	NEMA 4X (IP66)

***CALIBRATION SERVICES AVAILABLE**

These Selection Guides are for quick comparison of similar products. Please refer to the catalog page number referenced for complete product information and specifications.

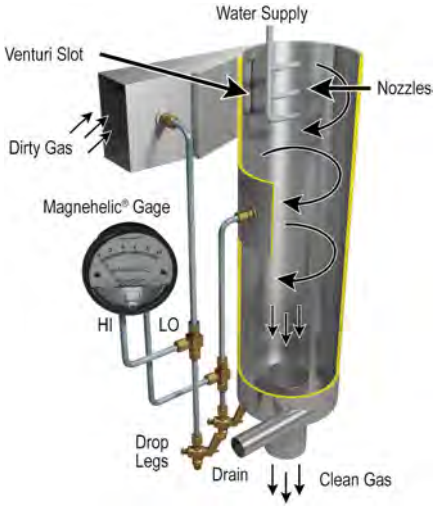

Differential pressure gage assists operator in adjusting venturi pressure drop in dust scrubber

This scrubber design removes unwanted dust or particulate matter from air or gas using an adjustable throat venturi. To adjust the pressure drop across the venturi, a jack-screw-actuated sliding vane varies the slot width. A permanently mounted Dwyer® Magnehelic® differential pressure gage indicates the venturi pressure drop while the operator adjusts to the desired or design setting. Where water may possibly enter the gage sensing lines, as in this application, drop legs with drain valves are needed to permit draining the lines at their lowest point. Good engineering practice dictates that the Magnehelic® gage always be mounted above the sensing tap when possible to prevent moisture accumulation in the lines and gage. At minimum, mount the gage above the lowest point in the sensing lines.

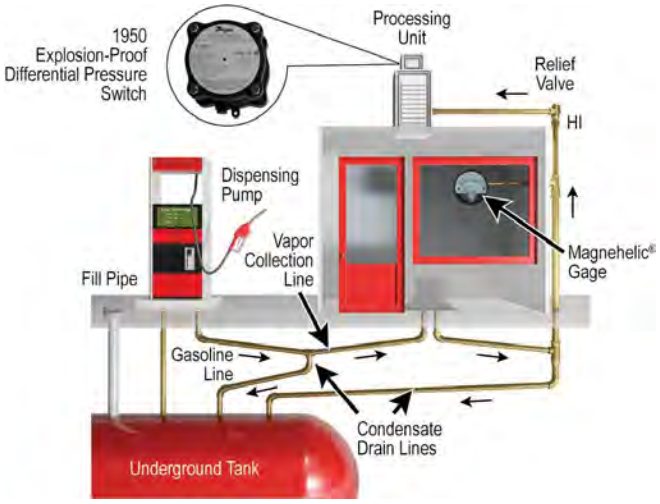

Gasoline vapor recovery system

Some area pollution control agencies require that 90% or more of gasoline vapor vented at service stations when fuel is dispensed must be prevented from venting to atmosphere. Using a dual hose dispenser, this vapor recovery system is a vacuum assist, vapor burnoff type. The blower creates a low vacuum at the nozzle, routing vapor from the automobile tank to underground storage tanks. As uncondensed vapor pressure reaches 2 in to 3 in w.c. pressure, a Dwyer® Series 1950 explosion-proof differential pressure switch activates a rooftop burnoff unit, which ignites excess vapor. The Magnehelic® differential pressure gage mounted on the station wall monitors tank pressure to verify system operation. The gage is calibrated in inches of gasoline, from +6 to -2. This allows the operator to determine the necessary level correction due to tank pressure prior to dipsticking the tanks through the fill pipe.

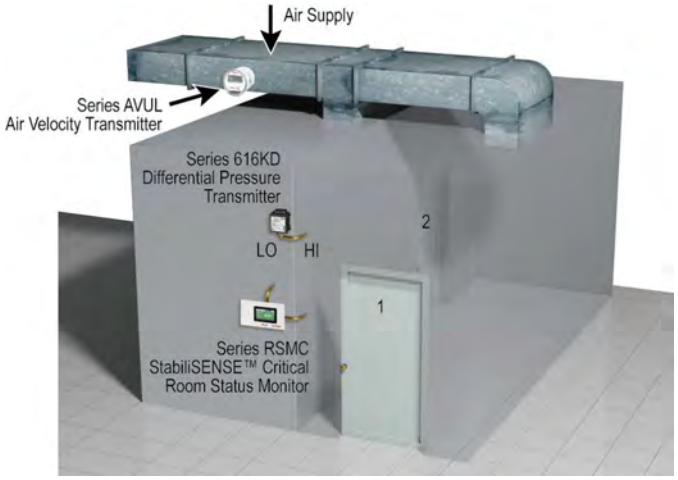

Dwyer® gages indicate pressurization of special rooms

A zero-center Dwyer® Magnehelic® differential pressure gage with a 0.25 in w.c. range either side of zero makes an effective monitor for proper operation of room pressurization systems. In the example, differential gage B has its high pressure port open to room 2 and its low pressure port to room 1; gage A has its high pressure port open to room 1 and its low pressure port open to the atmosphere. With the makeup air supply damper adjusted properly, room 2 will be a higher pressure than room 1 which is at higher than atmospheric pressure; both gages will read positive. Should the air supply to room 2 be obstructed, gage B will read negative. If the air supply fails entirely, both gages will read zero. For even better security, a Photohelic® switch/gage will provide automatic alarm or start-up of a backup system.

Filling scuba diver air tanks

The Dwyer® Series DPG differential pressure gage with oxygen cleaning and 5000 psi range is used in gas blending applications for filling scuba diver's air tanks. The DPG is the master mixing gage in this manifold apparatus. Two or three gases may be blended with the manifold to produce the appropriate blend of breathable gas depending on the diver and the depths they will reach. With the flow adjustment knobs and the 0.25% full-scale accuracy DPG, precise tank charging rates are maintained.

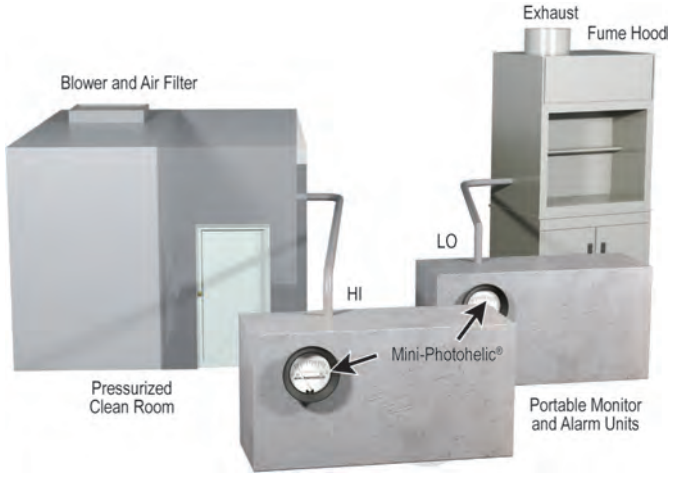

Compact switch/gage monitors pressure, actuates alarm

This portable pressure monitor alarm utilizes a Dwyer® Mini-Photohelic® differential pressure switch/gage to monitor either positive pressure, as in a clean room, or negative pressure, as in a fume or paint spray hood. It sounds an alarm, both audible and visual, when pressure exceeds either a preset high or low limit. The unit can be used temporarily to verify proper operation after initial installation, or it can be mounted permanently for continuous monitoring. In applications where a single fixed alarm pressure level is sufficient, a differential pressure switch can be used instead.

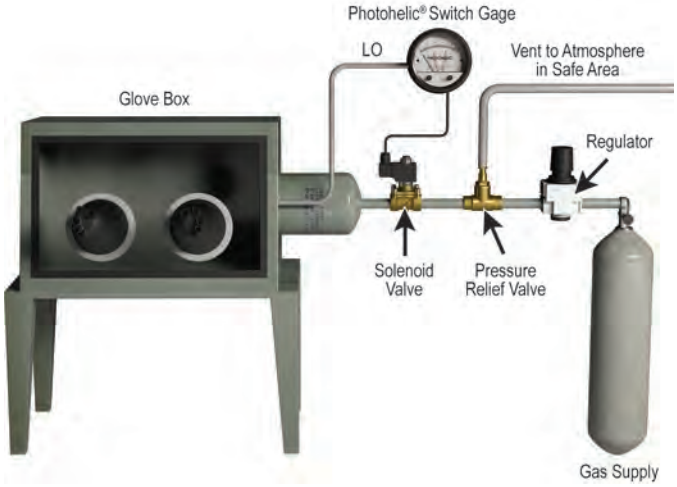

Zero-center switch/gage controls the inert atmosphere in glove box

A controlled inert atmosphere "glove-box" is used in the fields of physical chemistry and metallurgy for handling and welding special or hazardous materials. A Dwyer® Photohelic® differential pressure switch/gage serves as an automatic and readily adjustable pressure control for the helium, argon or nitrogen gas used in the system. The box is first evacuated, then pressurized with the required gas. Therefore, a zero-center Photohelic® switch/gage is used, permitting both pressure and vacuum to be read and controlled by a single gage. Use of the low pressure gage connection (rear chamber of gage) and a Buna-N diaphragm is suggested to minimize leaks from or to the atmosphere.

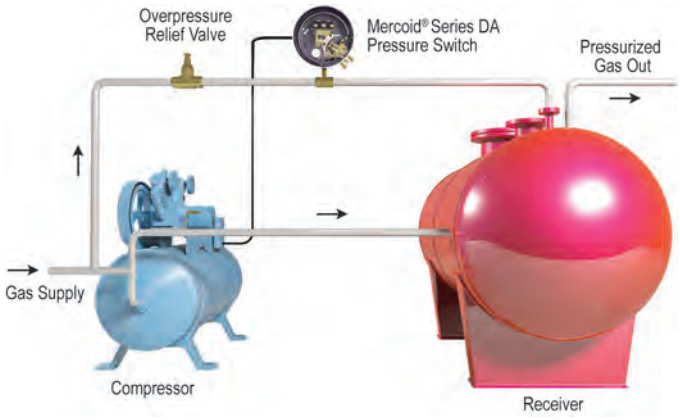

Mercoid® Series DA pressure switch maintains desired gas pressure in tank

Demand for compressed gas varies in this gas line. Because of this, a Mercoid® Series DA adjustable deadband pressure switch is included to turn the compressor on at low pressure and off when the maximum pressure is reached.

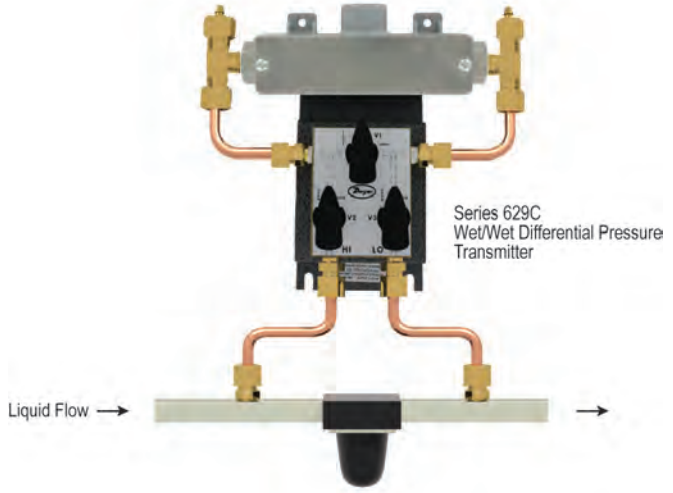

Three-valve manifold simplifies installation of wet/wet differential pressure transmitter

When using differential pressure transmitters in fluid applications, it is essential to periodically make sure that there is no air in the system, as this can cause erroneous readings. Unfortunately, the necessary three-valve bleed system is often expensive and large, making installation difficult and bulky. For this reason, Dwyer Instruments, Inc. offers the 3V option on all 629C wet/wet differential pressure transmitters. This compact, lightweight, and economical bleed manifold is shipped factory-installed on the 629C, eliminating the hassle of constructing a custom apparatus. The 629C, when combined with the three-valve option, makes for an ideal setup to monitor hydraulic filter clogging or other fluid pressure sensing applications.

PRESSURE SENSOR ACCURACY

What is accuracy? The International Electrotechnical Commission (IEC) definition of accuracy is maximum positive and negative deviation from the specified characteristic curve observed in testing a device under specified conditions and by a specified procedure. Unfortunately when it comes to defining accuracy for a pressure sensor it's more complicated. Accuracy has a large effect on the cost of a pressure sensor or even more importantly, the quality or efficiency of the process it is measuring. It is important to understand what factors determine accuracy and what questions to ask when selecting a sensor so that an apples-to-apples comparison can be made instead of apples-to-oranges.

Even though there isn't a defined standard for pressure sensor accuracy there is an IEC standard that defines factors that make-up accuracy. IEC 61298-2 states that accuracy must include Hysteresis, Non-Repeatability and Non-Linearity. Non-Repeatability and Hysteresis are well defined. Hysteresis is the maximum difference in sensor output at a pressure when that pressure is first approached with pressure increasing and then approached with pressure decreasing during a full span pressure cycle. Non-Repeatability is the maximum difference in output when the same pressure is applied, consecutively, under the same conditions and approaching from the same direction.

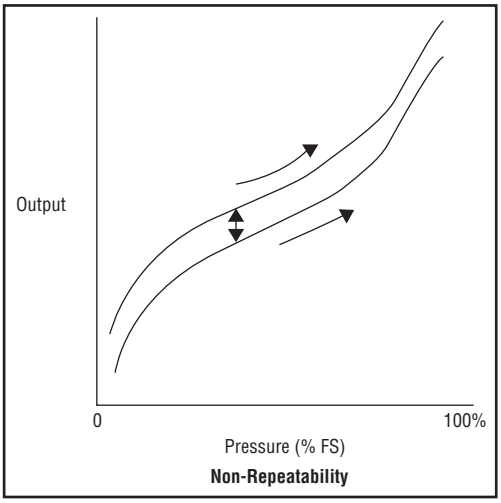

Non-Repeatability

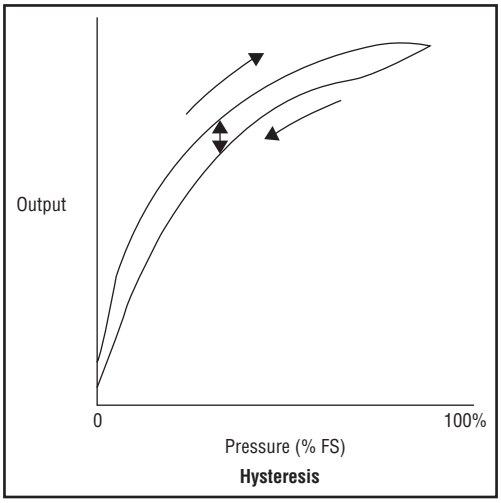

Hysteresis

Where manufacturers start to differentiate is with Non-Linearity. IEC 61298-2 lists three methods of Non-Linearity, the two most popular methods used by sensor manufacturers are the Best Fit Straight Line Non-Linearity and Terminal Point Non-Linearity. Usually the method of non-linearity used will be specified with the sensors accuracy as BFSL or Terminal Point Method. Why is it important to understand the difference between these two methods? Based on the Non-Linearity characteristics of a sensor, it could have two vastly different Non-Linearity percentages. The following diagram shows how the same sensor can have two Non-Linearity percentages.

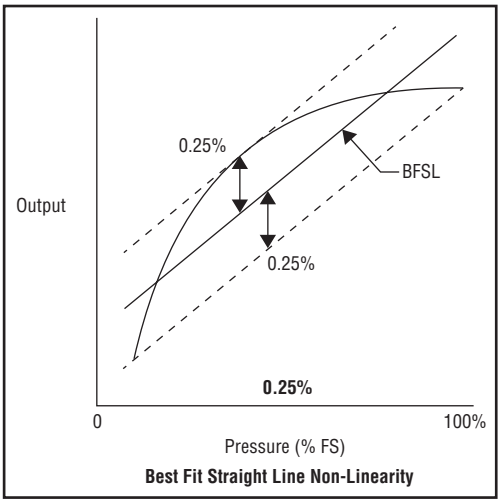

Best Fit Straight Line Non-Linearity

=

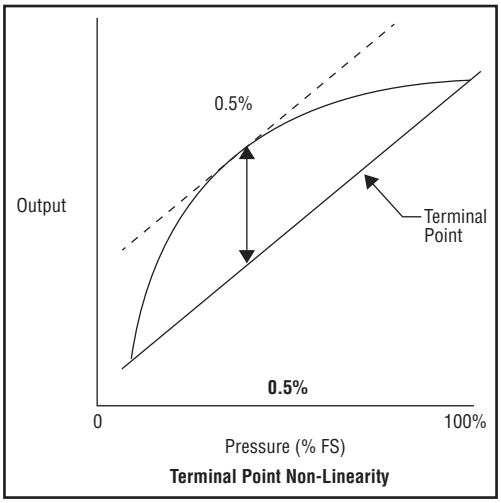

Terminal Point Non-Linearity

PRESSURE SENSOR ACCURACY

IEC 61298-2 identifies which factors make up accuracy (Non-Linearity, Non-Repeatability, Hysteresis) but the IEC standard does not specify how these factors are combined into a single accuracy. The methods in which the values are combined have a substantial impact on the total accuracy. Some manufactures simply sum the three factors while others use mathematical equations such as Root of the Sum Squared or Root of the Mean Squared to combine Non-Linearity, Non-Repeatability, and Hysteresis into a total accuracy percentage. The following examples show how the same transmitter can have three accuracy percentages depending on which equation is used.

Non-Linearity – 0.5% BFSL
Non-Repeatability – 0.05% FS.
Hysteresis – 0.1% FS.

$$RSS = \sqrt{(\text{Non-Linearity})^2 + (\text{Hysteresis})^2 + (\text{Non-Repeatability})^2}$$

$$RSS = \sqrt{(0.50)^2 + (0.10)^2 + (0.05\%)^2}$$

$$RSS = 0.51\%$$

Root of the sum squared

$$RMS = \sqrt{\frac{(\text{Non-Linearity})^2 + (\text{Hysteresis})^2 + (\text{Non-Repeatability})^2}{3}}$$

$$RMS = \sqrt{\frac{(0.50)^2 + (0.10)^2 + (0.05\%)^2}{3}}$$

$$RMS = 0.30\%$$

Root of the mean squared

Sum = Non-Linearity + Hysteresis + Non-Repeatability
Sum = 0.5 + 0. + 0.05
Sum = 0.65%
Summed Factors

So why is this important? Accuracy has a price. The cost of a pressure sensor is a function of its accuracy, the more accurate the sensor the more expensive it will be. From a manufacturing point of view, the wrong sensors can cause expensive quality or efficiency problems. That is why it is important to understand how manufacturers calculate accuracy and recognize what parameters to look at when comparing pressure sensors. By understanding how manufacturers calculate accuracy, you will be able to make a more informed decision when evaluating pressure sensors, ensuring the next sensor you select will have the required accuracy at the right price for the application.

Dwyer

SERIES 2000

MAGNEHELIC® DIFFERENTIAL PRESSURE GAGES

Indicate Positive, Negative or Differential, Accurate within 1%

5 YEAR LIMITED WARRANTY

CALIBRATION SERVICES AVAILABLE

Standard Magnehelic® gage

High Accuracy Magnehelic® gage Shown with optional -SS bezel

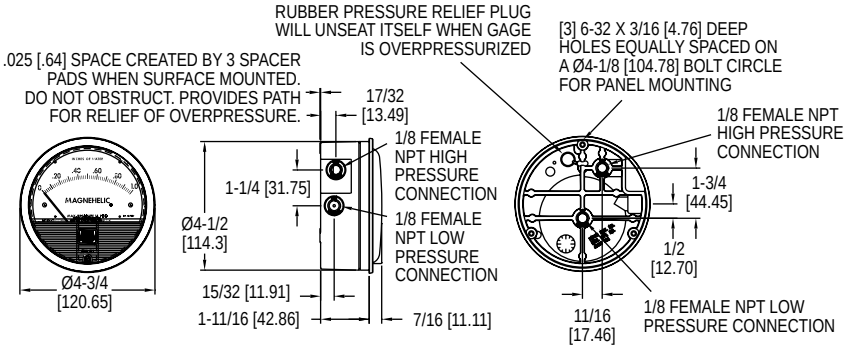

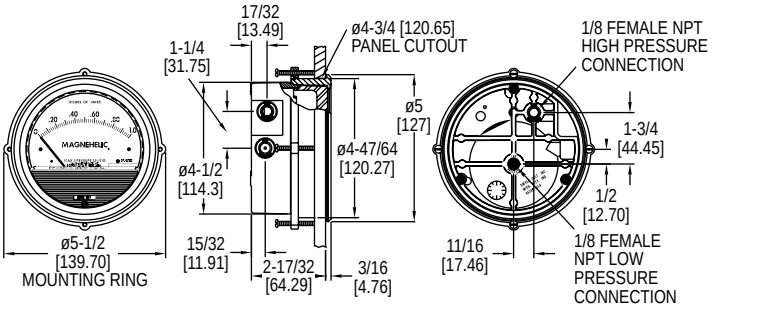

VIDEO ONLINE

Select the **Series 2000 Magnehelic® Differential Pressure Gages** for a versatile low differential pressure gage with a wide choice of 81 models and 27 options to choose from. Using Dwyer's simple, frictionless Magnehelic® gage movement, it quickly indicates air or non-corrosive gas pressures--either positive, negative (vacuum) or differential. The design resists shock, vibration, over-pressures and is weatherproof to IP67.
Select the –HA High Accuracy Magnehelic® gage option for an accuracy within 1% of full-scale. Also included with the –HA option at no extra cost are a mirrored scale overlay and a 6 point calibration certificate.

BENEFITS/FEATURES

- Easy to read gage through undistorted plastic face permits viewing from far away
- Patented design provides quick response to pressure changes means no delay in assessing critical situations
- Durable and rugged housing and high-quality components combine to provide long-service life and minimized down-time
- High accuracy option is twice as accurate as the standard Magnehelic® gage

APPLICATIONS

- Filter monitoring
- Air velocity with Dwyer® pitot tube
- Blower vacuum monitoring
- Fan pressure indication
- Duct, room or building pressures
- Clean room positive pressure indication

ACCESSORIES

Model	Description
A-432	Portable kit; combine carrying case with any Magnehelic® gage of standard range, except high pressure connection. Includes 9 ft (2.7 m) of 3/16″ ID rubber tubing, standhang bracket and terminal tube with holder
A-605	Air filter gage accessory kit; adapts any standard Magnehelic® gage for use as an air filter gage. Includes aluminum surface mounting bracket with screws, two 5 ft (1.5 m) lengths of 1/4″ aluminum tubing, two static pressure tips and two molded plastic vent valves, integral compression fittings on both tips and valves
A-605B	Air filter gage accessory kit; air filter kit with two plastic open/close valves, two 4″ steel static tips, plastic tubing and mounting flange
A-605C	Air filter gage accessory kit; air filter kit with two plastic open/close valves, two plastic static tips, plastic tubing and mounting flange

SPECIFICATIONS

Service: Air and non-combustible, compatible gases (natural gas option available).
Note: May be used with hydrogen. Order a Buna-N diaphragm. Pressures must be less than 35 psi.
Wetted Materials: Consult factory.
Housing: Die cast aluminum case and bezel, with acrylic cover. Exterior finish is coated gray to withstand 168 hour salt spray corrosion test.
Accuracy: ±2% (-HA model ±1) of FS (±3% (-HA ±1.5%) on -0, -100PA, -125PA, -10MM and ±4% (-HA ±2%) on -00, -60PA, -6MM ranges), throughout range at 70°F (21.1°C).
Pressure Limits: -20 in Hg to 15 psig (-0.677 to 1.034 bar); MP option: 35 psig (2.41 bar); HP option: 80 psig (5.52 bar).
Enclosure Rating: IP67.
Overpressure: Relief plug opens at approximately 25 psig (1.72 bar), standard gages only.❶
Temperature Limits: 20 to 140°F* (-6.67 to 60°C). -20°F (-28°C) with low temperature option.
Size: 4″ (101.6 mm) diameter dial face.
Mounting Orientation: Diaphragm in vertical position. Consult factory for other position orientations.
Process Connections: 1/8″ female NPT duplicate high and low pressure taps - one pair side and one pair back.
Weight: 1 lb 2 oz (510 g), MP & HP 2 lb 2 oz (963 g).
Standard Accessories: Two 1/8″ NPT plugs for duplicate pressure taps, two 1/8″ pipe thread to rubber tubing adaptor, and three flush mounting adapters with screws. (Mounting and snap ring retainer substituted for three adapters in MP & HP gage accessories.)
Compliance: Meets the technical requirements of EU Directive 2011/65/EU (RoHS II). **Note:** -SP models not RoHS approved.

*Low temperature models available as special options.

Note: For applications with high cycle rate within gage total pressure rating, next higher rating is recommended. See Medium and High pressure options.

A-432

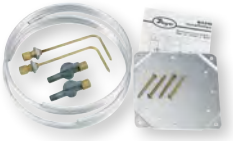

A-605

USA: California Proposition 65
⚠**WARNING:** This product can expose you to chemicals including Lead, which is known to the State of California to cause cancer and birth defects or other reproductive harm. For more information go to www.P65Warnings.ca.gov.

❶**Over Protection Note: See page 21 (Series 2000)**

Dwyer

SERIES 2000

MAGNEHELIC® DIFFERENTIAL PRESSURE GAGES

Indicate Positive, Negative or Differential, Accurate within 1%

5 YEAR LIMITED WARRANTY

CALIBRATION SERVICES AVAILABLE

Bezel provides flange for flush mounting in panel.

Clear plastic face is highly resistant to breakage. Provides undistorted viewing of pointer and scale.

Precision litho-printed scale is accurate and easy to read.

Calibrated range spring is flat spring steel. Small amplitude of motion assures consistency and long life. It reacts to pressure on diaphragm. Live length adjustable for calibration.

Red tipped pointer of heat treated aluminum tubing is easy to see. It is rigidly mounted on the helix shaft.

Pointer stops of molded rubber prevent pointer over-travel without damage.

"Wishbone" assembly provides mounting for helix, helix bearings and pointer shaft.

Jeweled bearings are shock-resistant mounted; provide virtually friction-free motion for helix. Motion damped with high viscosity silicone fluid.

Helix is precision made from an alloy of high magnetic permeability. Mounted in jeweled bearings, it turns freely, following the magnetic field to move the pointer across the scale.

Zero adjustment screw is conveniently located in the plastic cover, and is accessible without removing cover. O-ring seal provides pressure tightness.

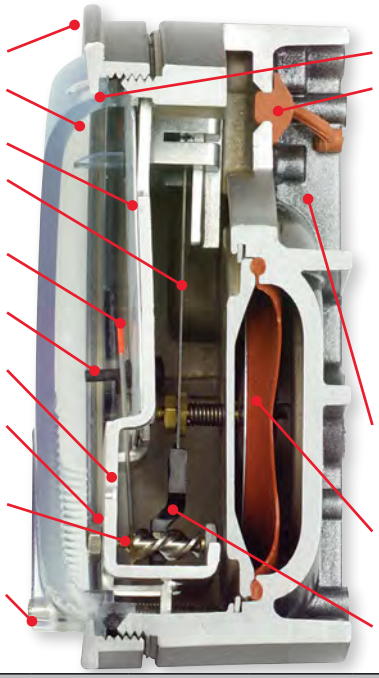

O-ring seal for cover assures pressure integrity of case.

OVERPRESSURE PROTECTION
Blowout plug is comprised of a rubber plug on the rear which functions as a relief valve by unseating and venting the gage interior when over pressure reaches approximately 25 psig (1.7 bar). To provide a free path for pressure relief, there are four spacer pads which maintain 0.023″ clearance when gage is surface mounted. Do not obstruct the gap created by these pads.
The blowout plug is not used on models above 180″ of water pressure, medium or high pressure models, or on gages which require an elastomer other than silicone for the diaphragm.
The blowout plug should not be used as a system overpressure control. High supply pressures may still cause the gage to fail due to over pressurization, resulting in property damage or serious injury. Good engineering practices should be utilized to prevent your system from exceeding the ratings of any component.

Die cast aluminum case is precision made and iridite-dipped to withstand 168 hour salt spray corrosion test. Exterior finished in baked dark gray hammerloid. One case size is used for all standard pressure options, and for both surface and flush mounting.

Silicone rubber diaphragm with integrally molded O-ring is supported by front and rear plates. It is locked and sealed in position with a sealing plate and retaining ring. Diaphragm motion is restricted to prevent damage due to overpressures.

Samarium Cobalt magnet mounted at one end of range spring rotates helix without mechanical linkages.

MODEL CHART

Model	Range, Inches of Water
2000-00N†••	.05-0-.2
2000-00†••	0-.25
2000-0†•	0-.50
2001	0-1.0
2002	0-2.0
2003	0-3.0
2004	0-4.0
2005	0-5.0
2006	0-6.0
2008	0-8.0
2010	0-10
2012	0-12
2015	0-15
2020	0-20
2025	0-25
2030	0-30
2040	0-40
2050	0-50
2060	0-60
2080	0-80
2100	0-100
2120	0-120
2150	0-150
2160	0-160
2180*	0-180
2250*	0-250
Zero Center Ranges	
2300-00†••	0.125-0-0.125
2300-0†•	.25-0-.25
2301	.5-0-.5
2302	1-0-1
2304	2-0-2
2310	5-0-5
2320	10-0-10
2330	15-0-15

Model	Range, PSI
2201	0-1
2202	0-2
2203	0-3
2204	0-4
2205	0-5
2210*	0-10
2215*	0-15
2220*	0-20
2230**	0-30
Model	**Range, CM of Water**
2000-15CM	0-15
2000-20CM	0-20
2000-25CM	0-25
2000-50CM	0-50
2000-80CM	0-80
2000-100CM	0-100
2000-150CM	0-150
2000-200CM	0-200
2000-250CM	0-250
2000-300CM	0-300
Zero Center Ranges	
2300-4CM	2-0-2
2300-10CM	5-0-5
2300-30CM	15-0-15

Model	Range, MM of Water
2000-6MM†••	0-6
2000-10MM†•	0-10
2000-15MM	0-15
2000-25MM	0-25
2000-30MM	0-30
2000-50MM	0-50
2000-80MM	0-80
2000-100MM	0-100
2000-125MM	0-125
2000-150MM	0-150
2000-200MM	0-200
2000-250MM	0-250
2000-300MM	0-300
Zero Center Ranges	
2300-6MM†••	3-0-3
2300-10MM†•	5-0-5
2300-20MM†•	10-0-10
Model	**Range, Pa**
2000-60NPA†••	10-0-50
2000-30PA†••	0-30
2000-60PA†••	0-60
2000-100PA†•	0-100
2000-125PA†•	0-125
2000-250PA	0-250
2000-300PA	0-300
2000-500PA	0-500
2000-750PA	0-750
2000-1000PA	0-1000
Zero Center Ranges	
Model	**Range, Pa**
2300-60PA†••	30-0-30
2300-100PA†•	50-0-50
2300-120PA	60-0-60
2300-200PA	100-0-100
2300-250PA	125-0-125
2300-300PA	150-0-150
2300-500PA	250-0-250
2300-1000PA	500-0-500

Model	Range, kPa
2000-0.5KPA	0-0.5
2000-1KPA	0-1
2000-1.5KPA	0-1.5
2000-2KPA	0-2
2000-2.5KPA	0-2.5
2000-3KPA	0-3
2000-4KPA	0-4
2000-5KPA	0-5
2000-8KPA	0-8
2000-10KPA	0-10
2000-15KPA	0-15
2000-20KPA	0-20
2000-25KPA	0-25
2000-30KPA	0-30
Zero Center Ranges	
2300-1KPA	.5-0-.5
2300-2KPA	1-0-1
2300-2.5KPA	1.25-0-1.25
2300-3KPA	1.5-0-1.5

Dual Scale Air Velocity Units
For use with pitot tube

Model	Range, in w.c./ Velocity F.P.M.
2000-00AV†••	0-.25/300-2000
2000-0AV†•	0-.50/500-2800
2001AV	0-1.0/500-4000
2002AV	0-2.0/1000-5600
2005AV	0-5.0/2000-8800
2010AV	0-10/2000-12500

Dual Scale English/Metric Models

Model	Range, in w.c.	Range, Pa or kPa
2000-00D†••	0-.25	0-62 Pa
2000-0D†•	0-0.5	0-125 Pa
2001D	0-1.0	0-250 Pa
2002D	0-2.0	0-500 Pa
2003D	0-3.0	0-750 Pa
2004D	0-4.0	0-1.0 kPa
2005D	0-5.0	0-1.25 kPa
2006D	0-6.0	0-1.5 kPa
2008D	0-8.0	0-2.0 kPa
2010D	0-10	0-2.5 kPa
2015D	0-15	0-3.7 kPa
2020D	0-20	0-5 kPa
2025D	0-25	0-6.2 kPa
2050D	0-50	0-12.4 kPa
2060D	0-60	0-15 kPa

†These ranges calibrated for vertical scale position. • Accuracy ±3%. •• Accuracy ±4%. *MP option standard. **HP option standard.

VELOCITY AND VOLUMETRIC FLOW UNITS
Scales are available on the Magnehelic® gage that read in velocity units (FPM, m/s) or volumetric flow units (SCFM, m^3/s, m^3/h).
Stocked velocity units with dual range scales in inches w.c. and feet per minute are shown above. For other ranges contact the factory.
When ordering volumetric flow scales please specify the maximum flow rate and its corresponding pressure.
Example: 0.5 in w.c. = 16,000 CFM.

ACCESSORIES

Model	Description
A-135	Rubber gasket for panel mounting
A-310A	3-way vent valves. In applications where pressure is continuous and the Magnehelic® gage is connected by metal or plastic tubing which cannot be easily removed, we suggest using Dwyer A-310A vent valves to connect gage. Pressure can then be removed to check or re-zero the gage
A-321	Safety relief valve
A-401	Plastic carry case
A-448	3-piece magnet kit for mounting Magnehelic® gage directly to magnetic surface

A-310A

USA: California Proposition 65
⚠**WARNING:** This product can expose you to chemicals including Lead, which is known to the State of California to cause cancer and birth defects or other reproductive harm. For more information go to www.P65Warnings.ca.gov.

Dwyer

HIGH ACCURACY MAGNEHELIC® DIFFERENTIAL PRESSURE GAGE

CALIBRATION SERVICES AVAILABLE

5 YEAR LIMITED WARRANTY

Twice as accurate as the standard Magnehelic® gage

Mirrored scale overlay eliminates parallax error

IP67 weatherproof housing

Optional brushed SS bezel

6-point calibration certificate included

OPTIONS - HIGH ACCURACY MAGNEHELIC® GAGE	
To order add suffix:	**Description**
-HA	High accuracy Magnehelic® gage. Accuracy within 1% and weatherproof. Also includes mirrored scale overlay and a six point calibration certificate
-SS	Corrosion resistant brushed 304 stainless steel bezel

Accuracy Specifications: See page 20 (Series 2000)

ADDITIONAL GAGE OPTIONS

OPTIONS - OTHER OPTIONAL BEZELS	
To order add suffix:	**Description**
-CB	Chrome bezel option: A chrome plated aluminum bezel for an aesthetically pleasing finish when mounting on metal surfaces such as control panels.
-SB	Stainless steel bezel option: 304 stainless steel electro polished Ra 16 finished bezel.
-SS	Corrosion resistant brushed 304 stainless steel bezel

LED set point indicator

Adjustable signal flag

Transparent overlay

Mirrored scale overlay

Integrated mounting plate

OPTIONS - LED SET POINT INDICATOR	
To order add suffix:	**Description**
-SP	Bright red LED on right scale shows when set point is reached. Field adjustable from gage face, unit operates on 12-24 VDC. Set point indicator option comes with medium or high pressure construction.
Note: 4-13/16″ hole for flush mounting.	
OPTIONS - ADJUSTABLE SIGNAL FLAG	
To order add suffix:	**Description**
-ASF	Integral with plastic gage cover. Available for most models except those with medium or high pressure construction. Can be ordered with gage or separate.
OPTIONS - TRANSPARENT OVERLAYS	
To order add suffix:	**Description**
-G	Green (to highlight and emphasize critical pressures)
-R	Red (to highlight and emphasize critical pressures)
-Y	Yellow (to highlight and emphasize critical pressures)
OPTIONS - MIRRORED SCALE OVERLAY	
To order add suffix:	**Description**
-M	A mirrored scale overlay is also available to assist in reducing parallax error.
OPTIONS - INTEGRATED MOUNTING PLATE	
To order add suffix:	**Description**
-AHU1	Furnished with attached surface mounting plate
-AHU2	Furnished with attached surface mounting plate and including A-481 installer kit (2 plastic static pressure tips and 7´of PVC tubing)

OPTIONS - FOR HIGH STATE PRESSURE APPLICATIONS	
To order add suffix:	**Description**
-HP	High pressure option: for pressures to 80 psig
-MP	Medium pressure option: for pressures to 35 psig

OPTIONS	
To order add suffix:	**Description**
-FC	Factory calibration certificate
-LT	Low temperatures to -20°F (-28°C)
-NIST	NIST traceable calibration certificate

USA: California Proposition 65
⚠**WARNING:** This product can expose you to chemicals including Lead, which is known to the State of California to cause cancer and birth defects or other reproductive harm. For more information go to www.P65Warnings.ca.gov.

MAGNEHELIC® GAGE MOUNTING ACCESSORIES

A-610

A-369

Pressure reference port

A-464

A-464-SS

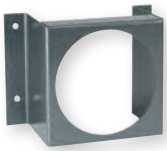
A-299

A-286

A-300

A-368

A-371

A single case size is used for most models of Magnehelic® gages. They can be flush or surface mounted with standard hardware supplied. Complete mounting and connection fittings plus instructions are furnished with each instrument. A 4-9/16″ hole is required for flush panel mounting.

Flush mounting is easily accomplished with the new A-300 Flush Mounting bracket. This bracket provides a solution to quickly and conveniently flush mount the Magnehelic® gage. The A-300 is ideal for mounting the Magnehelic® gage on control panel doors.

The A-368 is a simple bracket for quickly surface mounting the Magnehelic® gage. After securing the Magnehelic® gage to the A-368 bracket, mount the bracket on any flat surface.

The A-369 allows the Magnehelic® gage to be easily carried to locations where pressure readings need to be taken. The A-369 can stand on its own or hang on a nail or hook.

ACCESSORIES	
Model	**Description**
A-286	Magnehelic® gage panel mounting flange
A-299	Mounting bracket, flush mount for Magnehelic® gage, bracket is then surface mounted, steel with gray hammerloid epoxy finish
A-300	Flush mounting bracket
A-368	Surface mounting plate, aluminum, for Magnehelic® gage
A-369	Stand-hang bracket, aluminum, for Magnehelic® gage
A-371	Surface mounting bracket, use with medium pressure (-MP) or high pressure (-HP) models only
A-464-SS	Stainless steel flush mount kit for Magnehelic® gage
A-464	Flush mount kit for Magnehelic® gage
A-610	Pipe mounting kit for installing on 1-1/4″ to 2″ horizontal or vertical pipe

SERIES A-320

INSTRUMENT ENCLOSURES

Protects Various Instruments

A-320-A1

A-320-B1

A-320-BC

A-320-A-SS

A-320-B-SS

The **Series A-320 Instrument Enclosures** protect instruments in all applications. The enclosures, available in plastic and stainless steel, fit a variety of gages including the Series 605 transmitter, DM-2000, 3000MR/MRS and DH3. All models include silicone tubing, Banjo fittings, and threaded pressure connections pre-installed. The threaded pressure connections allow the user to easily change the connection type through the use of fittings or adapters. This modification can be implemented to allow connection to a wide variety of plastic or metal tubing.

SPECIFICATIONS
Housing Material: ABS plastic or 304 SS.
Process Connection: 1/8″ female NPT (-SS models: 1/8″ BSPT).
Enclosure Rating: Plastic models: IP66.
Weight: A-320-A1: 1.1 lb (0.5 kg); A-320-B1: 1.4 lb (0.65 kg); A-320-BC: 1.4 lb (0.65 kg); A-320-A-SS: 2.3 lb (1.05kg); A-320-B-SS: 3.0 lb (1.35 kg).

MODEL CHART	
Model	**Description**
A-320-A1	2000 Magnehelic® gage
A-320-B1*	3000MR/MRS Photohelic® switch/gage, Series 605 Magnehelic® differential pressure transmitter, DH3 Digihelic® pressure controller, 2000 Magnehelic® gage with medium and high pressure options
A-320-BC	2000 Magnehelic® gage, DM-1000 DigiMag® digital differential pressure gage, DM-2000 differential pressure transmitter, instruments with backwards compatible bezel option
A-320-A-SS	2000 Magnehelic® gage
A-320-B-SS	2000 Magnehelic® gage, DM-2000 differential pressure transmitter
*For DH3 to fit on A-320-B1 the casing on the electrical plug must be removed.	

ACCESSORIES	
Model	**Description**
A-339-SS	1/8″ male BSPT to 3/16″ hose barb

Dwyer

SERIES AT-2000

ATEX/IECEX APPROVED MAGNEHELIC® DIFFERENTIAL PRESSURE GAGES

Magnehelic® Gage in Flameproof ATEX/IECEx Enclosure

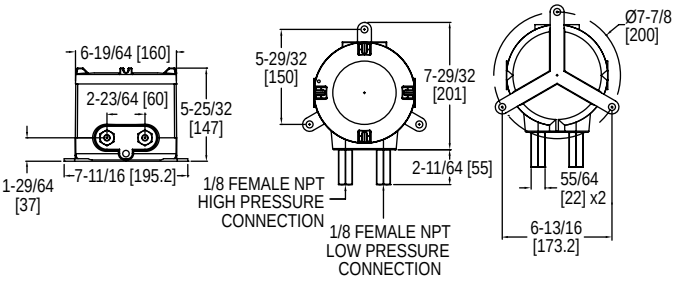

AT-100NA-2000, shown with VS0 port/valve configuration

The **Series AT-2000 ATEX/IECEx Approved Magnehelic® Differential Pressure Gages** combines the popular Magnehelic® line with a flameproof enclosure to extend usage to hazardous locations. This gage can indicate positive, negative or differential pressures and is accurate within 2%.

BENEFITS/FEATURES
- Quick response to pressure changes means no delay in assessing critical situations
- Durable and rugged housing and high-quality components combined provides long-service life and minimized down-time
- High impact strength and high temperature rated for applications where hazardous environments exist
- ATEX/IECEx housing provides all the capabilities and value of the Magnehelic® in a flame and explosion proof enclosure
- Increased response time at low pressures with LD port configuration

APPLICATIONS
- Fan and blower pressures
- Filter resistance
- Air velocity
- Furnace draft
- Liquid levels with bubbler systems
- Pressure in fluid amplifier or fluidic systems

Attention: Check local safety rules and warnings on unit and manual for a correct use of the instrument in hazardous area.

SPECIFICATIONS

Service: Air and non-combustible, compatible gases.
Wetted Materials: Consult factory.
Magnehelic® Housing: Die cast aluminum case and bezel with acrylic cover; Exterior finish is coated gray to withstand 168 hour salt spray corrosion test.
Housing Material: Aluminum.
Finishing: Texture epoxy coat RAL7015.
Accuracy: ±2% of FS (±3% on -0, -100PA, -125PA, -10MM and ±4% on -00, -60PA, -6MM ranges), throughout range at 70°F (21.1°C).
Pressure Limits: See pressure limit chart.
Temperature Limits: 20 to 140°F (-6.67 to 60°C); Low temperature option: -20°F (-28.8°C) (**Note:** Product temperature limits are less than case limits).
Mounting Orientation: Diaphragm in vertical position.
Enclosure Rating: IP66 (IP65 for versions VS1, VS2, and VL1).
Process Connections: 1/8˝ NPT female brass (SS optional).
Weight: 10.5 lb (4.8 kg).
ATEX Certificate: INERIS 21ATEX0033X.
IECEx Certificate: IECEx INE 21.0064X.
Compliance: ATEX: CE 0080 Ex II 2G Ex db IIC T5, T6 Gb -60°C≤Ta≤+50°C (T6) -60°C≤Ta≤+60°C (T5); II 2D Ex tb IIIC T75°C Db
IECEx: Ex db IIC T5, T6 Gb -60°C≤Ta≤+50°C (T6) -60°C≤Ta≤+60°C (T5) Ex tb IIIC T75°C Db.

RANGE CHART

Model	Range in w.c.	Model	Range in w.c.	Model	Range in w.c.
2000-00N	.05 to 0 to .2	**2006**	0 to 6.0	**2040**	0 to 40
2000-00	0 to .25	**2008**	0 to 8.0	**2050**	0 to 50
2000-0	0 to .50	**2010**	0 to 10	**2060**	0 to 60
2001	0 to 1.0	**2012**	0 to 12	**2080**	0 to 80
2002	0 to 2.0	**2015**	0 to 15	**2100**	0 to 100
2003	0 to 3.0	**2020**	0 to 20	**2120**	0 to 120
2004	0 to 4.0	**2025**	0 to 25	**2150**	0 to 150
2005	0 to 5.0	**2030**	0 to 30	**2160**	0 to 160

PRESSURE LIMITS

Port/Valve	One Pressure Port Connected	Both Pressure Ports Connected
VS0	10 kPa	10 kPa
VL0	10 kPa	10 kPa
VS1	20 kPa	15 kPa
VS2	40 kPa	20 kPa
VL1	20 kPa	15 kPa

MODEL CHART

Example	**AT**	**-101NA**	**-2001**	**-X**	**-W**	**1**	**VS0**	**AT-101NA-2001-X-W1VS0**
Enclosure	AT							ATEX/IECEx approved enclosure
Enclosure Material and Configuration		100NA 101NA						Aluminum enclosure no valve Aluminum enclosure with valve
Range			2XXX					Magnehelic differential pressure gage, specify range using range chart
Temperature Limits				X LT				Standard temperature limits -6.67 to 60°C Low temperature limit to -28.8°C
Cover					W			Glass window
Port/Valve Material						1 2		Brass SS
Port/Valve Configurations							VS0 VL0 VS1 VS2 VL1	STD port/no valve LD port/no valve STD port/STD valve STD port/LD valve LD port/LD valve

USA: California Proposition 65
⚠ **WARNING:** This product can expose you to chemicals including Lead, which is known to the State of California to cause cancer and birth defects or other reproductive harm. For more information go to www.P65Warnings.ca.gov.

Over Protection Note: See page 21 (Series 2000)

Dwyer

SERIES DM-1000

DIGIMAG® DIGITAL DIFFERENTIAL PRESSURE AND FLOW GAGE

24 Volt or Battery Powered, Fits in Magnehelic® Gage Cut-Out

CALIBRATION SERVICES AVAILABLE

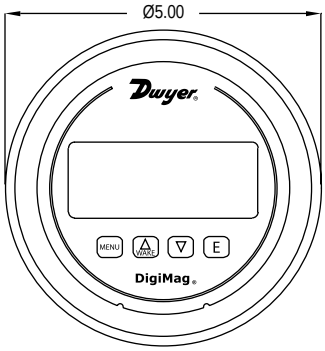

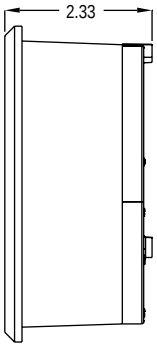

The **Series DM-1000 DigiMag® Digital Differential Pressure and Flow Gage** monitors the pressure of air and compatible gases just as its famous analog predecessor the Magnehelic® differential pressure gage. All models are factory calibrated to specific ranges. The 4-digit LCD can display readings in common English and metric units so conversions are not necessary. The simplified four button operation reduces set up time and simplifies calibration with its digital push-button zero and span.

BENEFITS/FEATURES

- Field programmed reduces installation time
- User selectable parameters for pressure, air velocity or flow permits same device for multiple applications
- Specialized filter set point for alerts when maintenance is due
- Security levels permit matches the correct access to right skill
- Power versatility works with 9-24 VDC or 9 V battery allows deployment in a variety of spaces wired or not

APPLICATIONS

- Differential pressure across filters
- Fan control
- Static pressures in ducts or buildings
- Room pressurization monitoring

SPECIFICATIONS

Service: Air and non-combustible, compatible gases.
Wetted Materials: Consult factory.
Housing Materials: Glass filled plastic.
Accuracy: ±1% FS including linearity, hysteresis and repeatability; ±2% FS for ranges 1 in w.c. and below.
Temperature Limits: 0 to 140°F (-18 to 60°C).
Compensated Temperature Limits: 32 to 122°F (0 to 50°C).
Long Term Stability: ±1% FS per year.
Thermal Effect: ±0.05% FS/°F typ.; ±0.10% FS/°F for ranges 1 in w.c. and below.
Display: 4-digit LCD (digits: 0.60H x 0.33W).
Display Update: Selectable for 1 s to 10 minutes or update only from button push.
Pressure Limits: Normal and bi-directional ranges 5 in w.c. and lower = 2 psi (13.7 kPa); Normal and bi-directional ranges 10 in w.c. and higher = 11 psi (75 KPa).
Selectable Engineering Units: in w.c., psi, kPa, Pa, mm w.c., mBar, in Hg, mm Hg, FS (0-100%).
Power Requirements: 9 V alkaline battery, included, user replaceable or external power supply 9-24 VDC.
Battery Service Life: Battery life depending on the display update setting: 150 hours (typical) if display update = 1 s; 9 month (typical) if display update = 10 minutes; 1.5 years (typical) if display update is disabled. Battery may last up to four times longer when using lithium-based battery ULTRALIFE U9VL-J.
Current Consumption: 5 mA max.
Electrical Connections: Removable terminal block for 16 to 26 AWG.
Electrical Entry: Cable gland for 0.114 to 0.250″ (2.9 to 6.4 mm) diameter cable.
Process Connections: 1/8″ (3 mm) ID tubing.
Enclosure Rating: NEMA 4X (IP66).
Size: 5″ (127 mm) OD front face.
Weight: 1.18 lb (535 g).
Compliance: CE.

MODEL CHART

Model	Range in w.c.	Range psi	Range kPa	Range Pa	Range mbar	Range mm w.c.	Range in Hg	Range mm Hg	Range % of FS	Resolution in w.c.
DM-1102	0.250	–	0.062	62.20	0.622	6.35	–	0.467	100.0	0.001
DM-1103	0.500	–	0.124	124.5	1.245	12.70	–	0.934	100.0	0.001
DM-1104	1.000	–	0.249	249.1	2.492	25.40	–	1.868	100.0	0.001
DM-1105	2.000	–	0.498	498.2	4.982	50.80	–	3.736	100.0	0.001
DM-1107	5.000	0.181	1.245	1245	12.45	127.0	0.368	9.34	100.0	0.002
DM-1108	10.00	0.361	2.491	2491	24.91	254.0	0.736	18.68	100.0	0.010
DM-1109	15.00	0.543	3.738	3738	37.38	381.0	1.104	28.02	100.0	0.010
DM-1110	25.00	0.903	6.227	6227	62.27	635.0	1.839	46.71	100.0	0.010
DM-1111	50.00	1.806	12.45	–	124.5	1270	3.678	93.42	100.0	0.020
DM-1112	100.0	3.613	24.91	–	249.1	2540	7.355	186.8	100.0	0.100

Note: Contact the factory for available bi-directional ranges from ±0.25 to ±10 in w.c.
Note: For air flow models change -11XX to -12XX.

OPTIONS

To order add suffix:	Description
-NIST	NIST traceable calibration certificate
Example: DM-1103-NIST	

ACCESSORIES

Model	Description
A-286	4-1/2″ gage panel mounting flange
A-300	Flat flush mounting bracket
A-480	Plastic static pressure tip
A-489	4″ straight static pressure tip with flange

Process Tubing Options: See page 453 (Gage Tubing Accessories)

Dwyer

SERIES 2-5000

MINIHELIC® II DIFFERENTIAL PRESSURE GAGE

Combining High Accuracy, Compactness, Dependability, and Low Cost

CALIBRATION SERVICES AVAILABLE

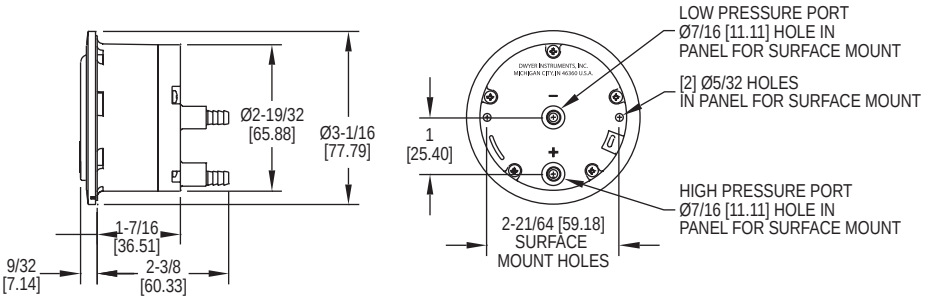

Combining clean design, small size and low cost with enough accuracy for all but the most demanding applications our **Series 2-5000 Minihelic® II Differential Pressure Gage** offers the latest in design features for a dial type differential pressure gage. It is our most compact gage but is easy to read and can safely operate at total pressures up to 30 psig.

BENEFITS/FEATURES

- Removable lens and rear-housing provides easy, cost-effective servicing
- Accuracy and value provides an excellent solution for OEM and user applications
- Durable housing materials make it well-suited for rough environments and total high pressure

APPLICATIONS

- Room positive pressure sensing
- Cabinet air-purging
- Medical respiratory equipment
- Air samplers
- Electronic air cooling systems
- Laminar flow hoods
- Local indication on filter status
- Face velocity on fume hood
- Duct pressures

SPECIFICATIONS

Service: Air and compatible gases.
Wetted Materials: Consult factory.
Housing: Glass filled nylon; polycarbonate lens.
Accuracy: ±5% of FS at 70°F (21.1°C).
Pressure Limits: 30 psig (2.067 bar) continuous to either pressure connection.
Temperature Limits: 20 to 120°F (-6.67 to 48.9°C).
Size: 2-1/16″ (52.39 mm) diameter dial face.
Mounting Orientation: Diaphragm in vertical position. Consult factory for other position orientations.
Process Connections: Barbed, for 3/16″ ID tubing (standard); 1/8″ male NPT (optional).
Weight: 6 oz (170.1 g).
Agency Approvals: Meets the technical requirements of EU Directive 2011/65/EU (RoHS II).

Caution: For use only with air or compatible non-corrosive gases.

Dwyer

SERIES 2-5000

MINIHELIC® II DIFFERENTIAL PRESSURE GAGE

Combining High Accuracy, Compactness, Dependability, and Low Cost

CALIBRATION SERVICES AVAILABLE

Housing is molded from strong mineral and glass filled nylon.

Pointer stops of molded rubber prevent pointer over-travel without damage.

Full view lens is removable and molded of acrylic.

Aluminum scale litho-printed black on white, enhances readability.

Red tipped aluminum pointer, rigidly mounted to helix is easy to see.

Wishbone assembly provides mounting for helix, helix bearings, and pointer shaft.

Jewel bearings provide virtually friction-free helix motion.

Helix is free to rotate in jewel bearings. It aligns with magnetic field of magnet to transmit pressure indications to pointer.

Zero adjustment screw, located behind the removable lens, eliminates tampering.

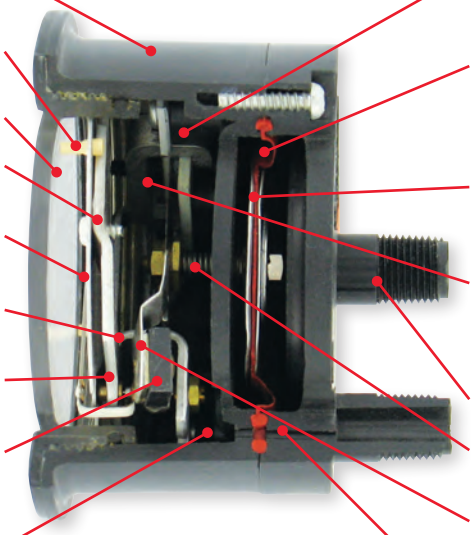

Range spring calibration clamp fixes live length of spring for proper gage calibration and is factory set and sealed.

Silicone rubber diaphragm allows accurate response to a broad range of temperatures and at extremely low pressure. Incorporates blow out area for overpressure protection.

Diaphragm support plates of lightweight aluminum on each side of the diaphragm minimize position or attitude sensitivity and help define pressure area.

Flat leaf range spring reacts to pressure on the diaphragm. Live length is adjustable for calibration. Small amplitude of motion minimizes inaccuracies and assures long life.

Low pressure tap connects to rear chamber.

Coil spring link provides a resilient connection between the diaphragm and the range spring.

Ceramic magnet mounted on a molded bracket at the end of the range spring rotates the helix without direct mechanical linkage.

High pressure tap connects with the front chamber through passageway in the plastic case and a sealing ring molded into the edge of the diaphragm.

MODEL CHART			
Model	**Range, in w.c**	**Model**	**Range, mm of Water**
2-5000-0	0-0.5	**2-5000-25MM**	0-25
2-5001	0-1.0	**2-5000-50MM**	0-50
2-5002	0-2.0	**2-5000-100MM**	0-100
2-5003	0-3.0	**Model**	**Range, Pascals**
2-5005	0-5.0	**2-5000-125PA**	0-125
2-5010	0-10	**2-5000-250PA**	0-250
2-5020	0-20	**2-5000-500PA**	0-500
2-5040	0-40	**Model**	**Range, kPa**
2-5060	0-60	**2-5000-1KPA**	0-1
2-5100	0-100	**2-5000-3KPA**	0-3
Model	**Range, PSI**		
2-5205	0-5		

OPTIONS	
To order add suffix:	**Description**
-BB	Bottom barbed surface mount
-FC	Factory calibration certificate
-NIST	NIST traceable calibration certificate
-NPT	1/8″ male NPT connections
Example: 2-5001-BB	

ACCESSORIES	
Model	**Description**
A-302F-A	303 SS static pressure tip with mounting flange; for 3/16″ ID rubber or plastic tubing; 4″ insertion depth; includes mounting screws
A-434	Portable kit
A-480	Plastic static pressure tip
A-489	4″ straight static pressure tip with flange
A-497	Surface mounting bracket
A-609	Air filter kit

SURFACE MOUNTING

Optional surface mounting with back mounting plate allows for quick installation to any surface. Process connections are barbed and point downwards. Add -BB for bottom barbed surface mount option.

PANEL MOUNTING

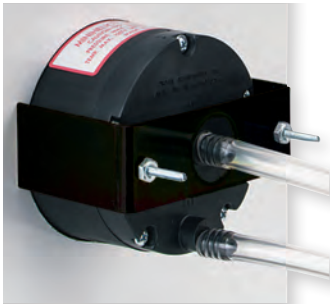

Mounting hardware is supplied with the Minihelic® II gage for panel mounting through a single hole, 2-5/8″ (67 mm) in diameter. Panel thickness up to 1/2″ (13 mm) can be accommodated with the hardware supplied. If necessary, surface mounting of the gage can be accomplished by means of two 4-40 screws into the tapped mounting bracket stud holes in the rear of the gage. Surface mounting requires clearance holes in the panel for the two pressure taps.

Process Tubing Options: See page 453 (Gage Tubing Accessories)

Dwyer

SERIES MARK II

MARK II MOLDED PLASTIC MANOMETERS

3% Accuracy For Stationary And Portable Applications

Mark II Model No. 25 inclined-vertical manometer. (shown with optional A-612 portable stand)

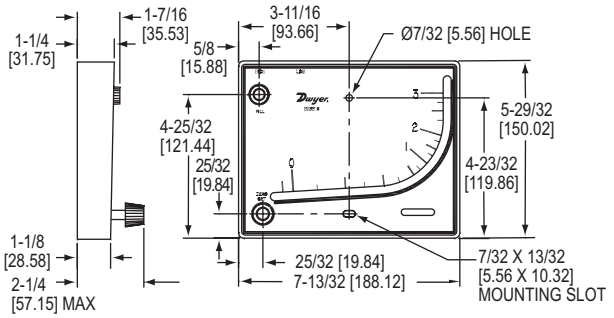

Mark II Model No. 40-1 inclined manometer

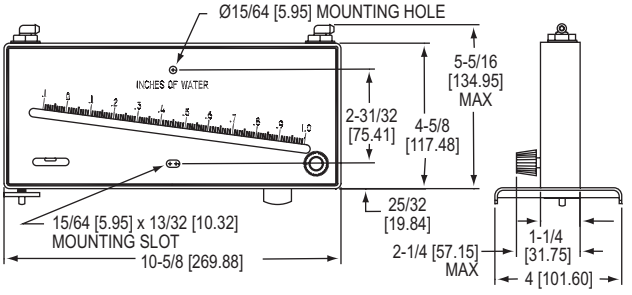

VIDEO ONLINE

Series Mark II Molded Plastic Manometers are of the inclined and inclined-vertical types. The curved inclined-vertical tube of the Model 25 gage provides higher ranges with more easily read increments at low readings. The Model 25 is excellent for general purpose work. The Model 40 inclined gage provides linear calibration and excellent resolution throughout its range. The Model 40 is ideally suited for air velocity and air filter gage applications. Both gage types are capable of pressure measurements above and below atmospheric as well as differential pressure measurements.

Included with each Mark II manometer are two tubing connectors for 1/8″ pipe or sheet metal ducts, two mounting screws, 1 ounce bottle of indicating fluid, red and green pointer flags and complete instructions.

The Model 25 also includes 8′ of flexible double column plastic tubing. Portable operation of the Model 25 is made possible by the use of the optional A-612 portable stand. A short piece of tubing can be slipped over the Model 25 pressure connections to contain the gage fluid in transit.

The Model 40 contains two 4-1/2′ lengths of clear plastic tubing, a plastic swing-out stand and leveling screw for portable operation. It also features convenient rapid shutoff pressure connections and integral overpressure safety traps.

BENEFITS/FEATURES

- Broad ranging in easy to read calibrated increments
- Gages ideally suited for general measurements and specific air applications
- Compact, stationary or portable device, make it a simple to use tool for pressure measurement in OEM or user applications

APPLICATIONS

- Paint booths
- Air velocity measurement
- Air filter gage

OEM SPECIALS

All Dwyer® Mark II molded plastic manometers can be supplied in OEM quantities with your name or special graphics and scales.

SPECIFICATIONS

INCLINED/VERTICAL

Accuracy: ±3% FS.
Temperature Limits: 140°F (60°C).
Pressure Limits: 10 psi (70 kPa).
Weight: 1.04 lb (472 g).
Agency Approvals: Meets the technical requirements of EU Directive 2011/65/EU (RoHS II).

INCLINED

Accuracy: ±3% FS.
Temperature Limits: 150°F (65°C).
Pressure Limits: 15 psi (100 kPa).
Scale Length: Approx. 8-1/4″ (21 cm).
Weight: 1.23 lb (558 g).
Agency Approvals: Meets the technical requirements of EU Directive 2011/65/EU (RoHS II).

MODEL CHART

Model	Range	Fluid Used
Mark II 25	0-3 in w.c	Red fluid, .826 s.g.
Mark II 26	0-7 in w.c.	Blue oil, 1.91 s.g.
Mark II 27*	0-7000 fpm	Red fluid, .826 s.g.
Mark II MM-80	0-80 mm w.c.	Red fluid, .826 s.g.
Mark II M-700PA	10-0-700 Pa	Red fluid, .826 s.g.
Mark II 40-1	.1-0-1.0 in w.c.	Red fluid, .826 s.g.
Mark II 40-25MM	0-26 mm w.c.	Red fluid, .826 s.g.
Mark II 40-250PA	10-0-250 Pa	Red fluid, .826 s.g.
Mark II 41-60MM	0-60 mm w.c.	Blue oil, 1.91 s.g.
Mark II 41-600PA	20-0-600 Pa	Blue oil, 1.91 s.g.

*Require Pitot tube at additional cost.❶

ACCESSORIES

Model	Description
A-480	Plastic static pressure tip
A-489	4″ straight static pressure tip with flange
A-606	Air filter kit
A-612	Portable stand

❶Pitot tube: See pages 183-185 (Test & Data section)
Process Tubing Options: See page 453 (Gage Tubing Accessories)

Dwyer

SERIES 250-AF

INCLINED MANOMETER AIR FILTER GAGES

Precision Machined, Solid Acrylic Plastic Gages, Accurate To ±1% Of Full-Scale

CALIBRATION SERVICES AVAILABLE

Model 250.5-AF

Model 452-AF

Dwyer® Durablock® **Series 250-AF Inclined Manometer Air Filter Gages** are precision machined 1″ thick solid acrylic plastic, virtually unbreakable and free of distortion. The fluid bore is precision drilled to ±.0002″ to assure life-long accuracy. A glass spirit level is built into the body and encapsulated to prevent damage or tampering. The scale is mirror polished chrome plated brass to assure parallax free reading by alignment of the meniscus with its reflection. Safety traps are incorporated in the body to prevent loss of fluid due to pressure surges. Red and green signal flags indicate clearly when a filter change is necessary. Gages are suitable for use in ambient temperatures of -20 to 150°F. Connection fittings are positively sealed but easily removed for zeroing or addition of fluid.

BENEFITS/FEATURES
- High-accuracy and easy to use make it a dependable device for many years of service
- Easy to read polished inclined scale allows pressure minute pressure differences to be read
- No moving parts mean no calibration or nothing to wear out

APPLICATIONS
- Air filter gage

USA: California Proposition 65
⚠**WARNING:** This product can expose you to chemicals including Lead, which is known to the State of California to cause cancer and birth defects or other reproductive harm. For more information go to www.P65Warnings.ca.gov.

▲ Economy Model 452-AF is similar to the 250 Series except they are not equipped with over pressure traps. Two A-324 1/4″ compression fittings are included with each gage but not shown. Bodies are of 5/8″ thick acrylic and scales are mirror polished, epoxy coated aluminum.

MODEL CHART

Model	Range: Water Column	Minor Divisions	Scale Length Inclined (Inches)	Overall Size (Inches)
250-AF	.10-0-1.0″	.02″	5-1/2	8-1/2 x 4-1/8 x 1
250.5-AF	.10-0-1.0″	.01″	8	11-3/8 x 4 x 1
251-AF	.05-0-.50″	.01″	5-1/2	8-1/4 x 3-3/8 x 1
252-AF	.20-0-2.0″	.02″	8	11-1/8 x 6-1/2 x 1
452-AF▲	0-2″	.02″	8	11 x 4 x 5/8

▲ 2 PSI maximum working pressure

ACCESSORIES

Model	Description
A-310B	3-way vent valve, 1/8″ NPT to 1/4″ metal tubing, 10 psi rating
A-317	Gage connecter, 1/8″ pipe thread opening, less OD thread, for slip fit in 3/4″ diameter opening in Series 250-AF gages

SERIES 200 & 300

DURABLOCK® SOLID PLASTIC STATIONARY GAGES

Suitable for Total Pressures Up to 100 psig, Temperatures Up to 150°F, Accuracy ±2% of Full-Scale (1% on Models 215, 244, 246 Only)

CALIBRATION SERVICES AVAILABLE

Model 310

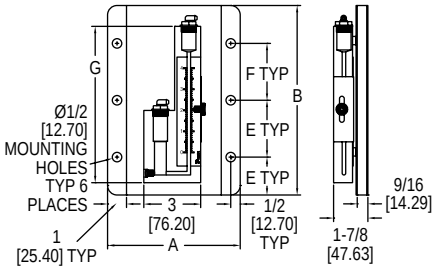

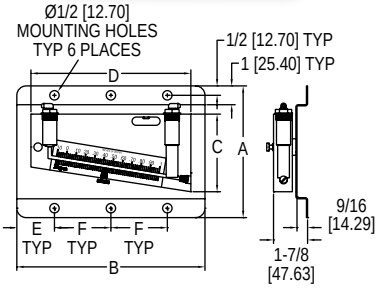

Model 200.5

Model	Dimensions, Inches A	B	C	D	E	F	G
200.5	7	13	3-15/16	11-3/8	2	4-1/2	-
202.5	9	13	5-5/8	12	2	4-1/2	-
209	9	13	7	11-1/4	2	4-1/2	-
215	7	10	3-1/16	9-1/2	2	3	-
244	11	16-1/2	3-1/8	15-5/8	4	8-1/2	-
246	13-1/2	23	11	22	4	15	-
310	7	16	-	-	4	4	15-1/4

Dwyer® **Series 200 & 300 Durablock® Solid Plastic Stationary Gages**, or draft gages, are offered in inclined and vertical (well-type) styles for highly accurate laboratory or general industrial service, for measurement of low range gas and air pressures, positive, negative or differential. To assure the accuracy required in instruments of this type, all machining of bores and wells is to the highest standards of precision backed by Dwyer's years of experience in the fabrications of acrylic instruments.

BENEFITS/FEATURES
- High-accuracy measurement of low range gas and air pressure suitable for laboratory or general industry
- Precision built assures device meets the highest standards
- No moving parts mean no calibration or nothing to wear out
- Over-pressure trap prevents liquid from being expelled from gage, preventing disruption of operation

APPLICATIONS
- Low pressure laboratory and industrial service applications

Exclusive Dwyer® over-pressure safety traps assure that over range pressures whether gradual or a sudden surge will not force the liquid out of the gage. Over-pressures simply raise the float, force the O-ring over the opening and seal the fluid in the gage. When pressure is reduced, the float drops down releasing the O-ring safety trap which allows the gage to continue operation.

MODEL CHART

Incline Type Model	Range, Inches of Water	Minor Scale Divisions	Scale Length	Weight lb-oz
200.5	.10-0-1.0	.01	8-1/4	3-11
202.5	.20-0-2.0	.01	8-3/4	4-7
209	.20-0-3.0	.02	8-3/4	4-11
215	.05-0-.25	.005	6	2-14
244	0-4	.02	13-1/4	9-11
246	0-6	.02	20	13-14
Vertical or Well-Type Model	**Range, Inches of Water**	**Minor Scale Divisions**	**Scale Length**	**Weight lb-oz**
310	0-10	.10	11-1/8	3-10

Note: Model 200.5 replaces Model 200. Model 202.5 replaces Model 202.

OPTIONS

To order add suffix:	Description
-NIST	NIST traceable calibration certificate
Example: 244-NIST	

Dwyer

SERIES 420

DURABLOCK® INCLINED-VERTICAL MANOMETERS

Accuracy To ±0.25%

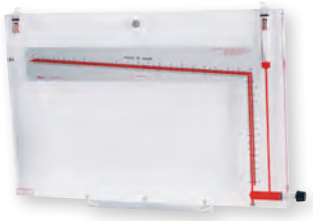

Inclined-vertical manometer single column

Inclined-vertical manometer double column

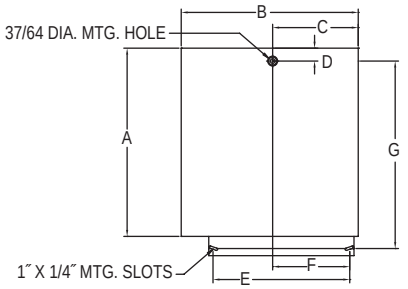

RANGES AND DIMENSIONS - SUITABLE FOR TOTAL PRESSURE UP TO 100 PSIG, TEMPERATURES UP TO 150°F															
Model	Description	Inclined Range Inches of Water	Inclined Minor Div.	Length of Inclined Scale	Vertical Range Inches of Water	Vertical Minor Div.	Length of Vertical Scale	Dimensions A	B	C	D	E	F	G	Weight lb-oz
424-10	Single column	0-2.0	.01	20″	2.1-10	.10	9″	16-1/2″	25-1/4″	12-5/8″	1″	10-1/2″	5-3/8″	16″	22-12
421-5	Single column	0-1.0	.01	6-1/2″	1.1- 5	.10	4-5/8″	9-7/8″	9-5/8″	4-7/8″	5/8″	6-1/2″	3-1/4″	9-7/8″	4-12
421-10	Single column	0-1.0	.01	6-1/2″	1.1-10	.10	10-1/8″	15-1/2″	9-5/8″	4-7/8″	5/8″	6-1/2″	3-1/4″	15-1/2″	6-10
422-5	Double column	0-1.0	.01	6-1/2″	1.1-5	.10	4-5/8″	10-1/2″	11-1/2″	5-1/8″	5/8″	6-1/2″	3-1/4″	10-1/2″	6-10
422-10	Double column	0-1.0	.01	6-1/2″	1.1-10	.10	10-1/8″	16-1/8″	11-1/2″	5-1/8″	5/8″	6-1/2″	3-1/4″	16-1/8″	10-13
*Single column metric-ranges and divisions in millimeters.															

Dwyer® **Series 420 Durablock® Inclined-Vertical Manometers** are extremely accurate instruments designed and made especially for precision measurement of low differential pressures in laboratory and test applications. The inclined range bore has a length of 20″ to provide ample multiplication of indicating fluid movement in this critical lower part of the range.

BENEFITS/FEATURES
- High-accuracy measurement of low range gas and air pressure suitable for laboratory and test applications
- Long bore length provides ample room for fluid movement for low range sensing
- Precision built to assure device meets the highest standards

APPLICATIONS
- Low pressure laboratory and test applications

ACCESSORIES - STANDARD
Description
Include two 1 oz bottles of .826 red gage fluid (1.91 blue gage oil for models 421-23 and 422-23), rapid shut-off type “a” connections, two 3 ft lengths of clear plastic tubing and two 1/8″ NPT tubing adapters — two sets for double column models.

SERIES 1230 & 1235

FLEX-TUBE® WELL-TYPE MANOMETERS

CALIBRATION SERVICES AVAILABLE

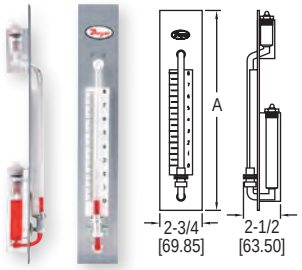

Series 1235 panel mounting

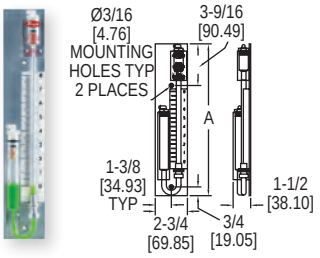

Series 1230 wall mounting

Model	Scale in Inches of Water or Mercury	Dimensions A W/M	Dimensions A D	Mercury Required to Fill (Wt.)
1230-8	0-8	15-13/16	16-3/4	12 oz
1230-12	0-12	19-3/8	21-7/8	14 oz
1230-16	0-16	23-1/2	27	16 oz
1230-20	0-20	27-9/16	32-1/8	18 oz
1230-36	0-36	43-1/8	51-1/4	26 oz

Model	Scale in Inches of Water or Mercury	Dimensions A W/M	Dimensions A D	Mercury Required to Fill (Wt.)
1235-20	0-20	29-5/16	33-9/16	18 oz

Dwyer® **Series 1230 & 1235 Flex-Tube® Well Type Manometers** are designed to meet the need for a direct reading single column instrument providing highly accurate pressure readings; positive, negative or differential. Unlike other makes, Dwyer manometers have no hidden wells or packing glands. These instruments are constructed of shatter-proof clear plastic tubing permanently bonded to well assemblies with leak-proof glued joints. Well assemblies are precisely machined from solid acrylic plastic. Over-pressure safety traps assure protection against loss of fluid. Scales are adjusted with quick-acting positive mechanism. These manometers are rated to 100 psig (6.89 bar). Not recommended for vacuum service beyond 5″ Hg (68 in w.c.).

BENEFITS/FEATURES
- High-accuracy pressure measurement suitable for laboratory or general industry
- Precision built assures device meets the highest standards
- No moving parts mean no calibration or nothing to wear out
- Over-pressure trap prevents liquid from being expelled from gage, preventing disruption of operation

APPLICATIONS
- Laboratory and industrial service applications

MODEL CHART
Model
1230-8-W/M
1230-12-W/M
1230-16-W/M
1230-20-W/M
1230-36-W/M
1235-20-W/M
Note: Water/mercury models. For 0.826 S.P. gage fluid models change -W/M to a -D.

OPTIONS	
To order add suffix:	**Description**
-NIST	NIST traceable calibration certificate
Example: 1222-8-W/M-NIST	

ACCESSORIES - STANDARD
Description
Include one set of type “a” connections, .826 sp. gr. red gage fluid for “D” style or fluorescein green dye concentrate with wetting agent for “W/M” styles, two 3 ft lengths of clear vinyl tubing and two 1/8″ NPT tubing adapters.

Dwyer
SERIES 4000

CAPSUHELIC® DIFFERENTIAL PRESSURE GAGE

Measures Pressure, Vacuum or Differential, Suitable for Internal Pressures to 500 psig

CALIBRATION SERVICES AVAILABLE

Capsuhelic® pressure gage has a large, easy-to-read 4˝ (102 mm) dial.

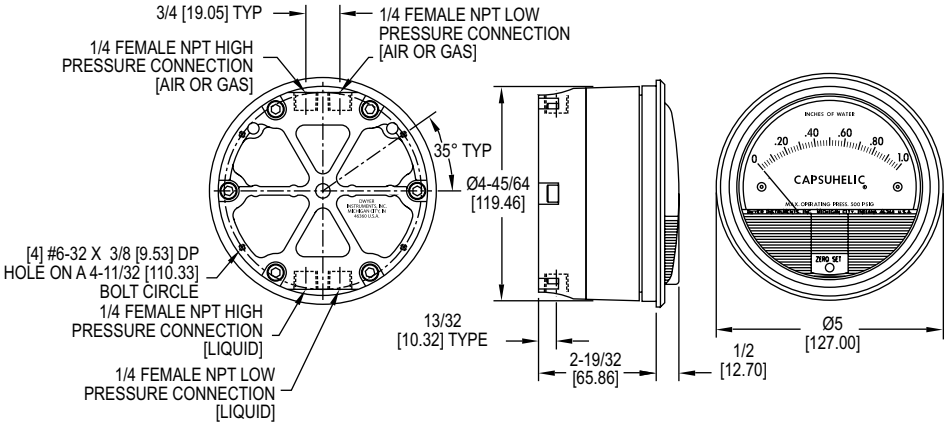

The **Series 4000 Capsuhelic® Differential Pressure Gage** is designed to give fast, accurate indication of differential pressures. The gage may be used as a readout device when measuring flowing fluids, pressure drop across filters, liquid levels in storage tanks and many other applications involving pressure, vacuum or differential pressure.

The pressure being measured is held within a capsule which is an integral part of the gage. This containment of the pressure permits the use of the gage on system pressures of up to 500 psig, even when differentials to be read are less than 0.1 in w.c.

BENEFITS/FEATURES

- Gage capsule permits high-pressure usage with small differentials
- Zero and range adjustments outside of gage means no disassembly in normal service
- Time-proven, simple, frictionless movement that permits full-scale readings as low as 0.5 in w.c.
- Diaphragm-actuated versus liquid filled gage supports outdoor use

APPLICATIONS

- Fluid flow
- Liquid storage tanks
- Filter pressure drops
- Vacuum or differential pressure

Note: May be used with hydrogen where pressures are less than 35 psi. Order with a Buna-N diaphragm.

MODEL CHART			
Model	**Range**	**Model**	**Range**
4005*	0-5.0 in w.c.	**4310**	5-0-5 in w.c.
4006*	0-6.0 in w.c.	**4330**	15-0-15 in w.c.
4010*	0-10 in w.c.	**4205**	0-5 psid
4015*	0-15 in w.c.	**4210**	0-10 psid
4020*	0-20 in w.c.	**4215**	0-15 psid
4025*	0-25 in w.c.	**4220**	0-20 psid
4030*	0-30 in w.c.	**4616B****	0-16 ft w.c.
4040*	0-40 in w.c.	**4635**	0-35 ft w.c.
4050*	0-50 in w.c.		
4060*	0-60 in w.c.		
4080*	0-80 in w.c.		
4100*	0-100 in w.c.		
4200*	0-200 in w.c.		
*These ranges available for vertical scale position only. **Available only with the brass case for water service.			
Note: Scales reading directly in flow, heights, etc., are also available.			

SPECIFICATIONS
Service: Aluminum case: Air and compatible gases and oil based liquids; Brass case: Air and compatible gases and water based liquids.
Wetted Materials: Consult factory.
Housing: Die cast aluminum with impregnated hard coating, standard. Optional forged brass housing is required for water or water based fluids. Special material diaphragms available, contact factory.
Accuracy: ±3% of FS at 70°F (21.1°C). (±4% on 4200, 4210, 4215, 4220, 4300, 4400, and 4500).
Pressure Limits: -20˝ Hg to 500 psig (-0.677 bar to 34.4 bar).
Temperature Limits: 20 to 200°F (-6.67 to 93.3°C).
Size: 4˝ (101.6 mm) diameter dial face.
Mounting Orientation: Diaphragm in vertical position. Consult factory for other position orientations.
Process Connections: 1/4˝ female NPT high and low pressure taps, duplicated - one pair top for air and gas, and one pair bottom for liquids.
Weight: 3 lb, 3 oz (1.45 kg) aluminum case; 7 lb, 13 oz (3.54 kg) brass case.

OPTIONS	
To order add suffix:	**Description**
-ASF	Adjustable signal flag
B	Brass case
-NIST	NIST traceable calibration certificate
Scale Overlays	Red, green, mirrored or combination; specify locations

ACCESSORIES - STANDARD
Description
Two 1/4˝ NPT plugs for duplicate pressure taps, four flush mounting adapters with screws and four surface mounting screws.

ACCESSORIES	
Model	**Description**
A-298	Flat flush mounting bracket
A-314	Bleed fitting
A-370	Mounting bracket
A-496	Flush mount bracket
A-610	Pipe mount kit

USA: California Proposition 65
⚠**WARNING:** This product can expose you to chemicals including Lead, which is known to the State of California to cause cancer and birth defects or other reproductive harm. For more information go to www.P65Warnings.ca.gov.

Process Tubing Options: See page 453 (Gage Tubing Accessories)

Dwyer

SERIES PTGD

DIFFERENTIAL PRESSURE PISTON-TYPE GAGES

Excellent Accuracy and Over-Pressure Ratings

CALIBRATION SERVICES AVAILABLE

Shown with optional pointer follower

2.5˝

4.5˝

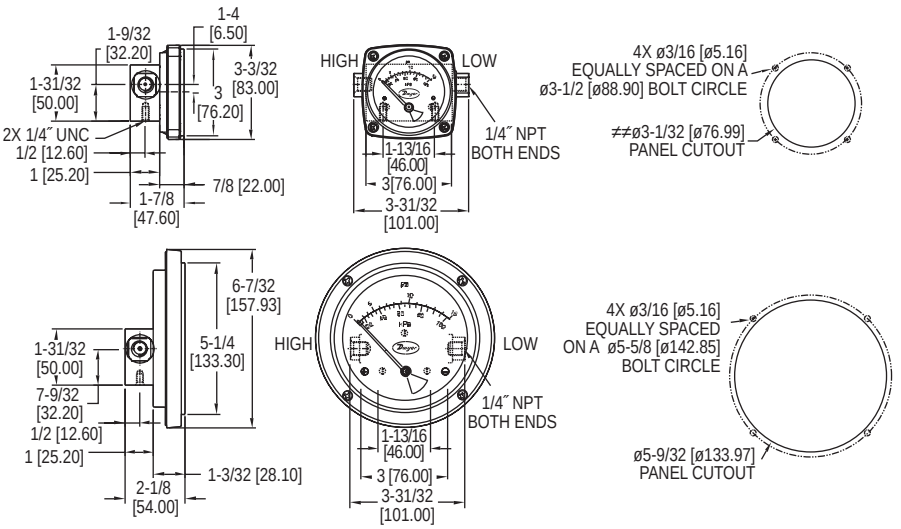

The **Series PTGD Differential Pressure Piston-Type Gages** can be used to measure the pressure drop across filters, strainers, pump performance testing, and heat exchanger pressure drop monitoring. Its simple, rugged design possesses weather and corrosion resistant gage front with a shatter resistant lens. The Series PTGD contains a piston-sensing element which provides different differential pressure ranges with full-scale accuracies of ±2%. Constructed with aluminum or 316 SS and available with two 1/4˝ female NPT end connections, the Series PTGD provides over-range protection rated to 3000 psig (200 bar) or 6000 psig (400 bar) depending on model. Standard models come with in-line connections. Back or bottom connections are also available.

BENEFITS/FEATURES

- Rugged, weather and corrosion proof design supports use in harsh environments
- Over-protection range depending on model, up to 6000 psig (400 bar) allows high-pressure applications
- Flexibility of connection selection fits the most sophisticated designs

APPLICATIONS

- Filter pressure drop
- Strainers
- Pump performance testing
- Heat exchanger pressure drop

SPECIFICATIONS

Service: Compatible gases and liquids.
Wetted Materials: Gage body: Aluminum or 316 SS; Piston: Aluminum or 316 SS; Spring: 302 SS; Seals: Buna-N (standard); PTFE, Ceramic magnet; Dial case: Nylon 6 30% glass filled gage case.
Window: Acrylic.
Accuracy: ±2% FS.
Temperature Limit: 176°F (80°C).
Pressure Limits: 3000 psi (206 bar) for aluminum body; 6000 psi (413 bar) for SS body.
Size: 2.5˝ (63 mm) or 4.5˝ (115 mm).
Mounting Orientation: Mount in any position.
Process Connections: 1/4˝ female NPT end connections standard; 1/4˝ female NPT back or bottom connections available. All styles available with 1/4˝ BSP.
Weight: Aluminum: 2.5˝ 0.88 lb (399 g); 4.5˝ 1.35 lb (612 g); Stainless steel: 2.5˝ 1.75 lb (794 g); 4.5˝ 2.3 lb (1.04 kg).

MODEL CHART

Model	Description	Range	Model	Description	Range
PTGD-AA01A	2.5˝ aluminum	0-5 psid (0.25 bar)	**PTGD-SA01A**	2.5˝ SS	0-5 psid (0.25 bar)
PTGD-AA02A	2.5˝ aluminum	0-10 psid (0.75 bar)	**PTGD-SA02A**	2.5˝ SS	0-10 psid (0.75 bar)
PTGD-AA03A	2.5˝ aluminum	0-15 psid (1 bar)	**PTGD-SA03A**	2.5˝ SS	0-15 psid (1 bar)
PTGD-AA04A	2.5˝ aluminum	0-20 psid (1.6 bar)	**PTGD-SA04A**	2.5˝ SS	0-20 psid (1.6 bar)
PTGD-AA05A	2.5˝ aluminum	0-25 psid (1.6 bar)	**PTGD-SA05A**	2.5˝ SS	0-25 psid (1.6 bar)
PTGD-AA06A	2.5˝ aluminum	0-30 psid (2 bar)	**PTGD-SA06A**	2.5˝ SS	0-30 psid (2 bar)
PTGD-AA07A	2.5˝ aluminum	0-40 psid (3 bar)	**PTGD-SA07A**	2.5˝ SS	0-40 psid (3 bar)
PTGD-AA08A	2.5˝ aluminum	0-50 psid (3.5 bar)	**PTGD-SA08A**	2.5˝ SS	0-50 psid (3.5 bar)
PTGD-AA09A	2.5˝ aluminum	0-60 psid (4 bar)	**PTGD-SA09A**	2.5˝ SS	0-60 psid (4 bar)
PTGD-AA10A	2.5˝ aluminum	0-80 psid (5.5 bar)	**PTGD-SA10A**	2.5˝ SS	0-80 psid (5.5 bar)
PTGD-AA11A	2.5˝ aluminum	0-100 psid (7 bar)	**PTGD-SA11A**	2.5˝ SS	0-100 psid (7 bar)
PTGD-AA12A	2.5˝ aluminum	0-150 psid (10 bar)	**PTGD-SA12A**	2.5˝ SS	0-150 psid (10 bar)

Note: For 4.5˝ dial face, change -AA to -AC for aluminum and -SA to -SC for stainless steel.
Note: For back or bottom connections as well as female BSP threads, contact the factory.

OPTIONS

To order add suffix:	Description
-N	EPDM seals
-PF	Pointer follower
-PY	Glycerine fill
-RP	Reverse port
-SP1	1 0.5A SPDT DIN plug
-SP2	2 0.25A SPDT DIN plugs
-V	FKM fluoroelastomer seals
Use order code:	**Description**
NISTCAL-PG1	NIST traceable calibration certificate

Dwyer

SERIES PFG2

PROCESS FILTER GAGE

Indicates Process Filter Status, In-Line or Bottom Connect Mounting

CALIBRATION SERVICES AVAILABLE

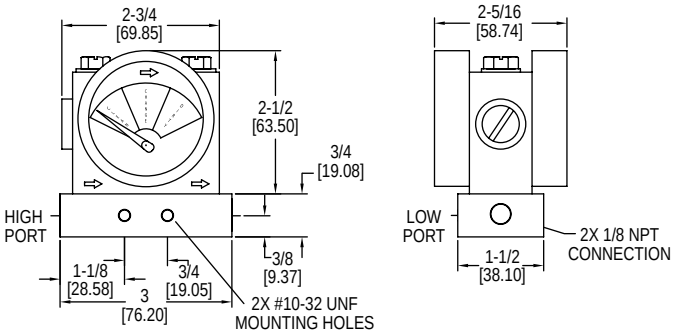

The **Series PFG2 Process Filter Gage** is designed for determining the state of an inline filter. The differential pressure indicator determines the pressure drop on either side of a filter and relates the value to one of three zones: clean (green), change (yellow), or dirty (red). The Series PFG2 is perfectly suited for filter applications, line loss, valve drop, and many other differential pressure applications where a simple indicator is needed. The direction of process flow is indicated on the dial, with the arrow pointing to the low pressure port. The PFG2 can be connected in-line through the side process connections, or can also be directly mounted through the outlet/inlet.

BENEFITS/FEATURES

- Simple easy to understand indicator means no guessing filter status
- Removable mounting block provides direct mounting options especially in difficult filter access locations
- Quick installation reduces time to operation

APPLICATIONS

- Filter pressure drop
- Filter status
- Valve drop
- Line loss

SPECIFICATIONS

Service: Liquids/gases compatible with SS, GFN, and fluoropolymer.
Wetted Materials: Aluminum, SS, glass filled nylon, and fluoropolymer.
Accuracy: ±5% FS.
Temperature Limit: 200°F (93°C).
Pressure Limit: 300 psig (20.7 bar).
Materials: Body: Glass filled nylon; Mounting block: Aluminum; Lens: Polyester; Elastomers: Fluoroelastomer.
Process Connection: 1/8″ female NPT.
Mounting Orientation: Any orientation with 10-32 threaded holes 3/4″ apart.
Weight: 9.6 oz (272.2 g).

MODEL CHART

Model	Full Range	Green Zone	Yellow Zone	Red Zone
PFG2-02	0 to 5 psid	0 to 2.5 psid	2.5 to 3.75 psid	3.75 to 5 psid
PFG2-03	0 to 10 psid	0 to 5 psid	5 to 7.5 psid	7.5 to 10 psid
PFG2-06	0 to 25 psid	0 to 11 psid	11 to 18.5 psid	18.5 to 25 psid

MODEL DIGIHELIC LINKS™

DATA ACQUISITION AND LOGGING SOFTWARE

Designed for Communication with Series DH and DHII Digihelic® Differential Pressure Controllers

The **Model Digihelic Links™ Data Acquisition and Logging Software** is an easy to use Windows® based program. Data logging and graphing can be set up by the individual control with varying logging periods. Event logging, live instrument status, remote calibration as well as uploading pre-saved configuration files are some of the higher end capabilities the Digihelic Links™ Communications Software provides. The Digihelic Links™ Communications Software is compatible with all Series DH and DHII Digihelic® Differential Pressure Controllers.

BENEFITS/FEATURES

- Log and graph data up to 10 units simultaneously; view up to 40 units
- Easy to use Windows® based operator interface
- Data logging at individually adjustable rates
- On-screen graphing of process values
- Upload and download saved control configuration profiles
- Remote calibration of controls

MODEL CHART

Model	Description
DIGIHELIC LINKS™	Communications software CD

ACCESSORIES

Model	Description
MN-1	Mini-Node™ USB/RS-485 converter

REQUIRED EQUIPMENT COMPUTER REQUIREMENTS

The Digihelic Links™ Communications Software application will run on Windows® 95/98 and Windows® NT Workstation 4.0 (Service Pack 3 recommended), Windows® 2000 and Windows® XP software. The hardware requirements for each of these operating systems can be found in the documentation provided with that operating system. One available RS-485 port is needed to communicate with the control(s). A minimum of 4 MB of hard disk space is needed for the Digihelic Links™ Communications Software application files, and additional hard disk space is needed to store data log files. Log file size will vary depending on the duration and rate selected for the controls and the number of controls on line.

COMMUNICATION REQUIREMENTS

To communicate with the Digihelic® Differential Pressure Controller from a PC with an RS-232 Serial Communications Port, an RS-485 to RS-232 converter is required to convert the signal from the Digihelic® controller RS-485 format to the RS-232 input of the PC. Recommended converters are the Models 351-9 RS-485 to RS-232 converter or Model MN-21 RS-485 to USB converter. For RS-485 systems a 120 Ω resistor is also needed to terminate the last control on the control network. Shielded twisted pair cable is recommended for wiring the controls together.

Windows® is a registered trademark of Microsoft Corporation

Dwyer
SERIES DHII

DIGIHELIC® II DIFFERENTIAL PRESSURE CONTROLLER

NEMA 4 (IP66) Housing With Large, Bright LCD, Square Root Output for Flow

CALIBRATION SERVICES AVAILABLE

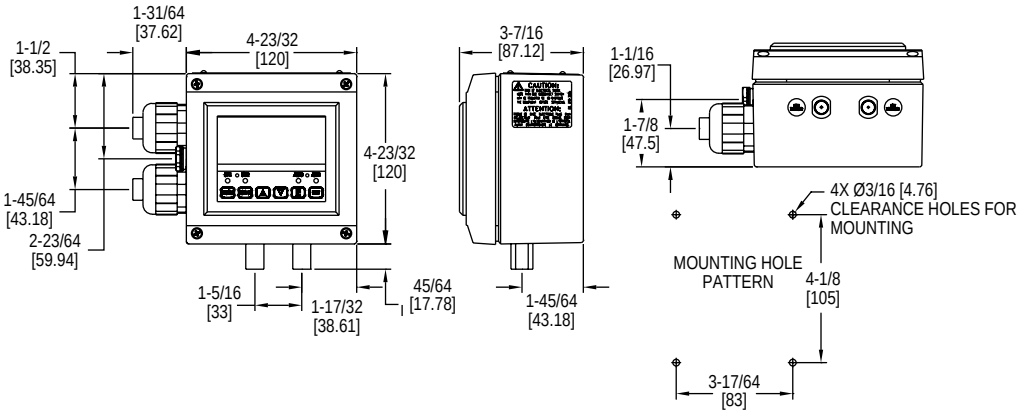

The **Series DHII Digihelic® II Differential Pressure Controller** takes all the features of the standard Digihelic® pressure controller and packages them in a robust NEMA 4 (IP66) housing.
The Digihelic® II pressure controller combines the 2 SPDT control relays, 4-20 mA process output and Modbus® communications with a large, brightly backlit 4 digit LCD display that can easily be seen from long distances. The electrical wiring has also been enhanced in the DHII with its detachable terminal blocks. The removable terminals allow the install to easily wire the terminal block outside the housing and then attach to the circuit board, reducing wiring difficulties and installation time on the process.
The Digihelic® II differential pressure control in the NEMA 4 (IP66) enclosure enables this product to be the perfect choice when mounting pressure controls outdoors in such applications as rooftop air handlers. This housing also makes it the ideal solution for surface mounting in clean rooms or facilities where water or a cleaning solution is utilized in maintaining plant cleanliness.

BENEFITS/FEATURES

- NEMA 4 housing enables a range of uses both outdoors or indoors where water is present
- Large backlight LCD display provides local reading from a distance
- Detachable terminal blocks reduce wiring difficulties saving installation time

APPLICATIONS

- Air handlers
- Clean rooms

SPECIFICATIONS

Service: Air and non-combustible, compatible gases.
Wetted Materials: Consult factory.
Housing Material: Aluminum, glass.
Accuracy: ±0.5% at 77°F (25°C) including hysteresis and repeatability (after 1 hour warm-up).
Stability: < ±1% per year.
Pressure Limits: Ranges ≤ 2.5 in w.c. = 2 psi; 5″: 5 psi; 10″: 5 psi; 25″: 5 psi; 50″: 5 psi, 100″: 9 psi.
Temperature Limits: 32 to 140°F (0 to 60°C).
Compensated Temperature Limits: 32 to 140°F (0 to 60°C).
Thermal Effects: 0.020%/°F (0.036/°C) from 77°F (25°C).
Power Requirements: High voltage power = 100-240 VAC, 50 to 400 Hz or 132-240 VDC; Low voltage power = 24 VDC ±20%.
Power Consumption: Low voltage power = 24 VDC - 130 mA max; High voltage power = 100-240 VAC, 132-240 VDC - 7 VA max.
Output Signal: 4-20 mA DC into 900 Ω max.
Zero and Span Adjustments: Accessible via menus.
Response Time: 250 ms (dampening set to 1).
Display: 4 digit backlit LCD 0.6″ height. LED indicators for set point and alarm status.
Electrical Connections: Euro type removable terminal blocks with watertight conduit fittings for 1/2″ watertight conduit.
Process Connections: 1/8″ female NPT.
Enclosure Rating: Designed to meet NEMA 4 (IP66).
Mounting Orientation: Mount unit in horizontal plane.
Weight: 2 lb 10 oz (1.19 kg).
Serial Communications: Modbus® RTU, RS485, 9600 baud.
Compliance: CE, UL.

SWITCH SPECIFICATIONS

Switch Type: 2 SPDT relays.
Electrical Rating: 8 amps at 240 VAC resistive.
Set Point Adjustment: Adjustable via keypad on face.

MODEL CHART - AVAILABLE PRESSURE ENGINEERING UNITS

Model	in w.c.	ft w.c.	mm w.c.	cm w.c.	psi	in Hg	mm Hg	mbar	Pa	kPa	hPa	oz/in²
DHII-002	.2500	-	6.350	0.635	-	-	0.467	0.623	62.28	-	0.623	0.144
DHII-004	1.000	-	25.40	2.540	-	-	1.868	2.491	249.1	0.249	2.491	0.578
DHII-006	5.000	.4167	127.0	12.70	.1806	.3678	9.342	12.45	1245	1.245	12.45	2.890
DHII-007	10.00	.8333	254.0	25.40	.3613	.7356	18.68	24.91	2491	2.491	24.91	5.780
DHII-008	25.00	2.083	635.0	63.50	.9032	1.839	46.71	62.27	6227	6.227	62.27	14.45
DHII-009*	50.00	4.167	1270	127.0	1.806	3.678	93.42	124.5	-	12.45	124.5	28.90
DHII-010*	100.0	8.333	2540	254.0	3.613	7.356	186.8	249.1	-	24.91	249.1	57.80

*Velocity and volumetric flow not available on bi-directional range units and models DHII-009 and DHII-010.

MODEL CHART - BI-DIRECTIONAL* RANGES

Model	Range
DHII-012	0.25 to 0 to 0.25 in w.c.
DHII-014	1.0 to 0 to 1.0 in w.c.
DHII-015	2.5 to 0 to 2.5 in w.c.
DHII-016	5 to 0 to 5 in w.c.
DHII-017	10 to 0 to 10 in w.c.

*Velocity and volumetric flow not available on bi-directional range units and models DHII-009 and DHII-010.

ACCESSORIES

Model	Description
A-301	Static pressure tip for 1/4″ metal tubing connection
A-302	Static pressure tip for 3/16″ and 1/8″ I.D. plastic or rubber tubing
A-302F-A	303 SS static pressure tip with mounting flange; for 3/16″ ID rubber or plastic tubing; 4″ insertion depth; includes mounting screws
A-438	Surface mounting brackets
A-489	4″ straight static pressure tip with flange
DIGIHELIC LINKS™	Communications software
MN-1	Mini-Node™ USB/RS-485 converter

OPTIONS

Use order code:	Description
-NIST	NIST calibration certificate

Modbus® is a registered trademark of Schneider Electric USA, Inc.

Process Tubing Options: See page 453 (Gage Tubing Accessories)

Dwyer
SERIES DH

DIGIHELIC® DIFFERENTIAL PRESSURE CONTROLLER

3-in-1 Instrument: Gage, Switch and Transmitter, Square Root Extractor for Air Flow

CALIBRATION SERVICES AVAILABLE

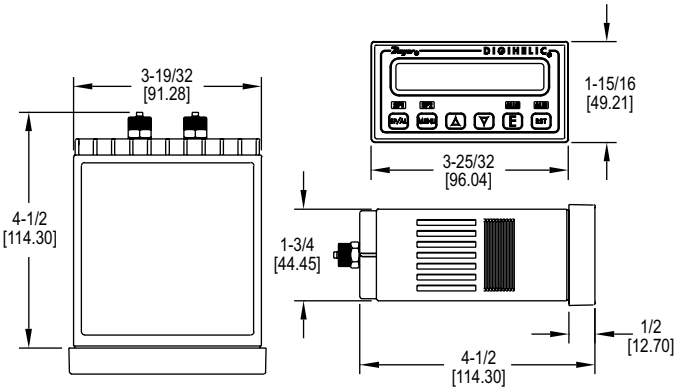

The **Series DH Digihelic® Differential Pressure Controller** is a 3-in-1 instrument possessing a digital display gage, control relay switches, and a transmitter with current output. The Digihelic® controller is the ideal instrument for pressure, velocity and flow applications, achieving a 0.5% full-scale accuracy on ranges from 0.25 to 100 in w.c. The Digihelic® controller allows the selection of pressure, velocity or volumetric flow operation in several commonly used engineering units. Two SPDT control relays with adjustable dead bands are provided along with a scalable 4-20 mA process output. The Series DH provides extreme flexibility in power usage by allowing 120/220 VAC and also 24 VDC power which is often used in control panels.
Programming is easy using the menu key to access 5 simplified menus which provide access to: security level; selection of pressure, velocity or flow operation; selection of engineering units; K-factor for use with flow sensors; rectangular or circular duct for inputting area in flow applications; set point control or set point and alarm operation; alarm operation as a high, low or high/low alarm; automatic or manual alarm reset; alarm delay; view peak and valley process readings; digital damping for smoothing erratic process applications; scaling the 4-20 mA process output to fit your application's range; Modbus® communications; and field calibration.

BENEFITS/FEATURES

- 3-in-1 instrument allows the reduction of several instruments with one product, saving inventory, installation time and money
- Velocity of flow modes, a square root output coincides with the actual flow curve for greater precision
- Power usage of 120/220 VAC or 24 VDC provides flexibility to incorporate device in control panel
- Secure menu program provides access to device operation only for the right skill level
- Modbus® communications supports Process and HVAC system integration and control

APPLICATIONS

- SCFM duct flow
- Industrial ovens air flow
- Filter status
- Clean room pressurization
- Fume hood air flow
- Surgical and medical room pressurization
- Damper and fan control

SPECIFICATIONS

Service: Air and non-combustible, compatible gases.
Wetted Materials: Consult factory.
Housing Material: ABS plastic, UL approved 94 V-0.
Accuracy: ±0.5% at 77°F (25°C) including hysteresis and repeatability.
Stability: < ±1% per year.
Pressure Limits: Ranges ≤ 2.5 in w.c. = 2 psi; 5″: 5 psi; 10″: 5 psi; 25″: 5 psi; 50″: 5 psi, 100″: 9 psi.
Temperature Limits: 32 to 140°F (0 to 60°C).
Compensated Temperature Limits: 32 to 140°F (0 to 60°C).
Thermal Effects: 0.020%/°F (0.036/°C) from 77°F (25°C).
Power Requirements: High voltage power = 100-240 VAC, 50-400 Hz or 132-240 VDC. Low voltage power = 24 VDC ±20%.
Power Consumption: Low voltage power = 24 VDC - 130 mA max; High voltage power = 100-240 VAC, 132-240 VDC - 7VA max.
Output Signal: 4-20 mA DC into 900 Ω max.
Zero and Span Adjustments: Accessible via menus.
Response Time: 250 ms.
Display: 4 digit LCD 0.4″ height. LED indicators for set point and alarm status.
Electrical Connections: Screw terminals.
Process Connections: Compression fitting for use with 1/8″ ID X 1/4″ OD tubing (3.175 mm ID x 6.35 mm OD). Optional barbed fitting for 3/16″ ID tubing.
Enclosure Rating: Face designed to meet NEMA 4X (IP66).
Mounting Orientation: Mount unit in horizontal plane.
Size: 1/8 DIN.
Panel Cutout: 1.772 x 3.620 in (45 x 92 mm).
Weight: 14.4 oz (408 g).
Serial Communications: Modbus® RTU, RS485, 9600 baud.
Compliance: CE, UL.

SWITCH SPECIFICATIONS
Switch Type: 2 SPDT relays.
Electrical Rating: 8 amps at 240 VAC resistive.
Set Point Adjustment: Adjustable via keypad on face.

MODEL CHART - AVAILABLE PRESSURE ENGINEERING UNITS

Model	in w.c.	ft w.c.	mm w.c.	cm w.c.	psi	in Hg	mm Hg	mbar	Pa	kPa	hPa	oz/in²
DH-002	.2500	-	6.350	0.635	-	-	0.467	0.623	62.28	-	0.623	0.144
DH-004	1.000	-	25.40	2.540	-	-	1.868	2.491	249.1	0.249	2.491	0.578
DH-006	5.000	.4167	127.0	12.70	.1806	.3678	9.342	12.45	1245	1.245	12.45	2.890
DH-007	10.00	.8333	254.0	25.40	.3613	.7356	18.68	24.91	2491	2.491	24.91	5.780
DH-008	25.00	2.083	635.0	63.50	.9032	1.839	46.71	62.27	6227	6.227	62.27	14.45
DH-009*	50.00	4.167	1270	127.0	1.806	3.678	93.42	124.5	-	12.45	124.5	28.90
DH-010*	100.0	8.333	2540	254.0	3.613	7.356	186.8	249.1	-	24.91	249.1	57.80

*Velocity and volumetric flow not available on bi-directional range units and models DH-009 and DH-010.

OPTIONS

To order add suffix:	Description
-B	Barbed fitting for 3/16″ ID tubing
-FC	Factory calibration certificate
-NIST	NIST traceable calibration certificate

Example: DH-004-FC

MODEL CHART - BI-DIRECTIONAL* RANGES

Model	Range
DH-012	0.25 to 0 to 0.25 in w.c.
DH-014	1.0 to 0 to 1.0 in w.c.
DH-015	2.5 to 0 to 2.5 in w.c.
DH-016	5 to 0 to 5 in w.c.
DH-017	10 to 0 to 10 in w.c.

*Velocity and volumetric flow not available on bi-directional range units and models DH-009 and DH-010.

ACCESSORIES

Model	Description
A-203	1/8″ ID x 1/4″ OD PVC tubing
A-266	Digihelic® surface mounting bracket
DIGIHELIC LINKS™	Communications software
MN-1	Mini-Node™ USB/RS-485 converter; the Mini-Node™ converters are an easy solution for utilizing the Digihelic® controller's RS-485 serial communication and connecting to virtually any PC

Modbus® is a registered trademark of Schneider Electric USA, Inc.

Process Tubing Options: See page 453 (Gage Tubing Accessories)

Dwyer

SERIES DH3

DIGIHELIC® 3 DIFFERENTIAL PRESSURE CONTROLLERS

Digihelic® Controller in Photohelic® Gage, Square Root Output for Flow

CALIBRATION SERVICES AVAILABLE

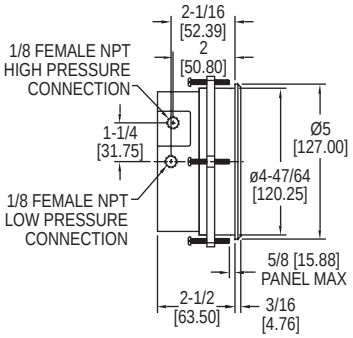

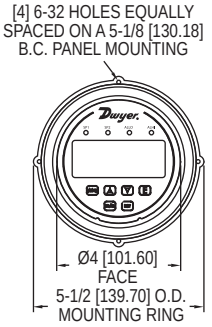

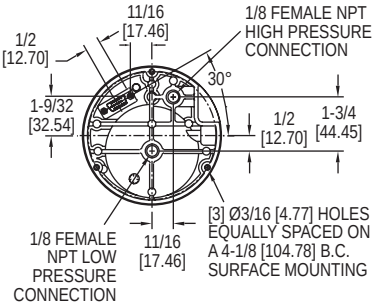

VIDEO ONLINE

Shown with optional -SS bezel.
Backward compatible⁺ with Magnehelic® gage.

The **Series DH3 Digihelic® 3 Differential Pressure Controllers** are 3-in-1 instruments possessing a digital display gage, control relay switches, and a transmitter with current output all packed in the popular Photohelic® gage style housing. Combining these 3 features allows the reduction of several instruments with one product, saving inventory, installation time and money. The Digihelic® controller is the ideal instrument for pressure, velocity and flow applications, achieving a 1.5% or better full-scale accuracy on ranges down to the extremely low 0.25 in w.c. to 2.5 in w.c. full-scale. Ranges of 5 in w.c. and greater maintain 0.5% FS accuracy. Bi-directional ranges are also available. The Series DH3 Digihelic® controller allows the selection of pressure, velocity or volumetric flow operation in several commonly used engineering units. 2 SPDT control relays with adjustable deadbands are provided along with a scalable 4-20 mA process output.

Programming is easy using the menu key to access 5 simplified menus which provide access to: security level; selection of pressure, velocity or flow operation; selection of engineering units; K-factor for use with flow sensors; rectangular or circular duct for inputting area in flow applications; set point control or set point and alarm operation; alarm operation as a high, low or high/low alarm; automatic or manual alarm reset; alarm delay; view peak and valley process reading; digital damping for smoothing erratic process applications; scaling the 4-20 mA process output to fit your applications range and field calibration.

BENEFITS/FEATURES

- 3-in-1 instrument allows the reduction of several instruments with one product, saving inventory, installation time and money
- Full-scale accuracy of 1.5% or better even on extremely low ranges, and 0.5% for ranges above 5 in w.c. provide for greater measurement precision
- Secure menu program provides access to device operation only for the right skill level
- Optional stainless steel bezel is the same installation diameter as Magnehelic® gage and simplifies field upgrade to DH3 pressure controller

APPLICATIONS

- SCFM duct flow
- Filter status
- Duct or building static pressure
- Damper and fan control

SPECIFICATIONS

Service: Air and non-combustible, compatible gases.
Wetted Materials: Consult factory.
Housing Material: Die cast aluminum case and bezel.
Accuracy: ±1.5% for 0.25 in and ±0.25 in w.c. ranges. Ranges 0.5 in to 5 in w.c. and corresponding bi-directional (except ±2.5 in w.c.) ±1%; All other ranges: ±0.5% @ 77°F (25°C) including hysteresis and repeatability (after 1 hour warm-up).
Stability: < ±1% per year.
Pressure Limits: Ranges (uni- and corresponding bidirectional), ≤ 1 in w.c.: 9 psi; 2.5 and 5 in w.c.: 1.5 psi; 10 in w.c.: 3 psi; 25 in w.c.: 8 psi; 50 in w.c.: 15 psi; 100 in w.c.: 20 psi.
Temperature Limits: 32 to 140°F (0 to 60°C).
Compensated Temperature Limits: 32 to 140°F (0 to 60°C).
Thermal Effects: 0.020%/°F (0.036/°C) from 77°F (25°C). For 0.25 in and ±0.25 in w.c. ranges: ±0.03%/°F (±0.054%/°C).
Power Requirements: 12-28 VDC, 12-28 VAC 50 to 400 Hz.
Power Consumption: 3 VA max.
Output Signal: 4-20 mA DC into 900 Ω max.
Zero and Span Adjustments: Accessible via menus.
Response Time: 250 ms (damping set to 1).
Display: Backlit 4 digit LCD 0.4″ height LED indicators for set point and alarm status.
Electrical Connections: 15 pin male high density D-sub connection. 18″ (46 cm) cable with 10 conductors included.
Process Connections: 1/8″ female NPT. Side or back connections.
Mounting Orientation: Mount unit in vertical plane.
Size: 5″ (127 mm) OD x 3-1/8″ (79.38 mm); -SS bezel: 4-3/4″ (120.7 mm) OD x 2-21/32 (67.5 mm).
Weight: 1.75 lb (794 g).
Agency Approvals: CE.

SWITCH SPECIFICATIONS
Switch Type: 2 SPDT relays.
Electrical Rating: 1 A @ 30 VAC/VDC.
Set Point Adjustment: Adjustable via keypad on face.

MODEL CHART

Model	Ranges	Model	Ranges
DH3-002	0 to 0.25 in w.c.	***DH3-010**	0 to 50 in w.c.
DH3-003	0 to 0.5 in w.c.	***DH3-011**	0 to 100 in w.c.
DH3-004	0 to 1 in w.c.	***DH3-013**	0 to ±0.25 in w.c.
DH3-005	0 to 2.5 in w.c.	***DH3-014**	0 to ±0.5 in w.c.
DH3-006	0 to 5 in w.c.	***DH3-015**	0 to ±1 in w.c.
DH3-007	0 to 10 in w.c.	***DH3-016**	0 to ±2.5 in w.c.
DH3-009	0 to 25 in w.c.	***DH3-017**	0 to ±5 in w.c.
		***DH3-018**	0 to ±10 in w.c.

*Velocity and volumetric flow not available on bi-directional range units and models DH3-010 and DH3-011.

ACCESSORIES

Model	Description
A-298	Flat aluminum bracket for flush mounting
A-301	Static pressure tip for 1/4″ metal tubing connection
A-302	Static pressure tip for 3/16″ and 1/8″ I.D. plastic or rubber tubing
A-302F-A	303 SS static pressure tip with mounting flange; for 3/16″ I.D. rubber or plastic tubing; 4″ insertion depth; includes mounting screws
A-370	Mounting bracket flush mount bracket; bracket is then surface mounted; steel with gray hammertone epoxy finish
A-489	4″ straight static pressure tip with flange

OPTIONS

To order add suffix:	Description
-FC	Factory calibration certificate
-NIST	NIST traceable calibration certificate
-SS	304 brushed stainless steel bezel. ⁺Backward compatible with standard Magnehelic® gage installation diameter

Example: DH3-004-SS

Process Tubing Options: See page 453 (Gage Tubing Accessories)

ATEX/IECEX APPROVED DIGIHELIC® DIFFERENTIAL PRESSURE CONTROLLER

Digihelic® Pressure Control in Flameproof ATEX/IECEx Enclosure

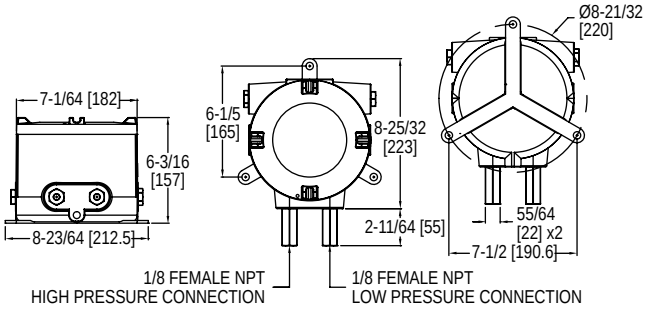

AT-102NA-DH3, shown with VS0 port/valve configuration

The **Series AT-DH3 ATEX/IECEx Approved Digihelic® Differential Pressure Controller** is a 3-in-1 instrument possessing a digital display gage, control relay switches, and a transmitter with current output. Combining these three features allows the reduction of several instruments with one product, saving inventory, installation time and money. The Digihelic® controller is the ideal instrument for hazardous area pressure, velocity and flow applications by allowing for the selection of pressure, velocity or volumetric flow operation in several commonly used engineering units. Two SPDT control relays with adjustable dead bands are provided along with a scalable 4-20 mA process output. In velocity or flow modes, a square root output is provided on the 4-20 mA signal to coincide with the actual flow curve. Flameproof enclosures are available in aluminum and can include a glass window for viewing process information and set point status on the digital display.

BENEFITS/FEATURES

- Saves inventory, installation time, and money by consolidating several instruments into one ATEX/IECEx approved product
- Flameproof enclosure with optional glass window and aluminum housing protects the device in hazardous areas while giving local visibility to process pressure and set point status
- Increased response time at low pressures with LD port configuration

APPLICATIONS

- Hazardous area pressure measurement and switching

Attention: Check local safety rules and warnings on unit and manual for a correct use of the instrument in hazardous areas.

PRESSURE LIMITS

Port/Valve	One Pressure Port Connected	Both Pressure Ports Connected
VS0	10 kPa	10 kPa
VL0	10 kPa	10 kPa
VS1	20 kPa	15 kPa
VS2	40 kPa	20 kPa
VL1	20 kPa	15 kPa

SPECIFICATIONS

Service: Air and non-combustible, compatible gases.
Wetted Materials: Consult factory.
DH3 Housing Material: Die cast aluminum case and bezel.
Housing Material: Aluminum.
Finishing: Texture epoxy coat RAL7015.
Accuracy: ±1.5% for 0.25 in w.c. and ±0.25 in w.c ranges. Ranges 0.5 in w.c. to 5 in w.c. and corresponding bi-directional (except ±2.5 in w.c.) ±1%; all other ranges: ±0.5% @ 77°F (25°C) including hysteresis and repeatability (after 1 hour warm-up).
Stability: < ±1% per year.
Pressure Limits: See pressure limit chart.
Temperature Limits: 32 to 140°F (0 to 60°C) (**Note:** Product temperature limits differ from case).
Compensated Temperature Limits: 32 to 140°F (0 to 60°C).
Thermal Effects: 0.020% /°F (0.036/°C) from 77°F (25°C); For 0.25 in and ±0.25 in w.c. ranges: ±0.03%/°F (±0.054%/°C).
Power Requirements: 12-28 VDC, 12-28 VAC 50 to 400 Hz.
Power Consumption: 3 VA max.
Output Signal: 4-20 mA DC into 900 Ω max.
Zero and Span Adjustments: Accessible via menus in safe zone only.
Response Time: 250 ms (damping set to 1). Without considering delay caused by Exd flame arrestors (up to 30 s from FS to zero depending model and ranges with STD pressure ports) about 15 s with LD pressure ports on very low ranges.
Display: Backlit 4-digit LCD 0.4″ height LED indicators for set point and alarm status.
Process Connections: 1/8″ NPT female brass (SS optional).
Electrical Connections: Two 1/2″ NPT female. Cable gland not included.
Electrical Wiring: Screw terminal.
Mounting Orientation: Mount unit in vertical plane.
Enclosure Rating: IP66 (IP65 for versions VS1, VS2, VL1).
Dial Size: 5″ (127 mm) OD x 3-1/8″ (79.38 mm).
Weight: 12.3 lb (5.6 kg).
ATEX Certificate: INERIS 21ATEX0033X.
IECEx Certificate: IECEx INE 21.0064X.
Compliance: ATEX: CE 0080 Ex II 2G Ex db IIC T5, T6 Gb -60°C≤Ta≤+50°C (T6) -60°C≤Ta≤+60°C (T5); II 2D Ex tb IIIC T75°C Db
IECEx: Ex db IIC T5, T6 Gb -60°C≤Ta≤+50°C (T6) -60°C≤Ta≤+60°C (T5) Ex tb IIIC T75°C Db.

SWITCH SPECIFICATIONS
Switch Type: 2 SPDT relays.
Electrical Rating: 1 A @ 30 VAC/VDC.
Set Point Adjustment: Adjustable via keypad on face in safe zone only.

MODEL CHART

Example	AT	-102NA	-DH3	-002	-W	1	VS0	12	AT-102NA-DH3-002-W1VS012
Enclosure	AT								ATEX/IECEx approved enclosure
Housing Material		102NA							Aluminum enclosure
Series			DH3						DH3 differential pressure controller
Range				002 003 004 005 006 007 009 010 011 013 014 015 016 017 018					0-0.25 in w.c. (0-62.2 Pa) 0-0.5 in w.c. (0-124.5 Pa) 0-1 in w.c. (0-249.1 Pa) 0-2.5 in w.c. (0-622.7 Pa) 0-5 in w.c. (0-1245 Pa) 0-10 in w.c. (0-2491 Pa) 0-25 in w.c. (0-6227 Pa) 0-50 in w.c. (0-12.45 KPa) 0-100 in w.c. (0-24.91 KPa) 0.25-0-0.25 in w.c. (62.2-0-62.2 Pa) 0.5-0-0.5 in w.c. (124.5-0-124.5 Pa) 1-0-1 in w.c. (249.1-0-249.1 Pa) 2.5-0-2.5 in w.c. (622.7-0-622.7 Pa) 5-0-5 in w.c. (1245-0-1245 Pa) 10-0-10 in w.c. (2491-0-2491 Pa)
Cover					B W				Blind Glass window
Port/Valve Material						1 2			Brass SS
Port/Valve Configurations							VS0 VL0 VS1 VS2 VL1		STD port/no valve LD port/no valve STD port/STD valve STD port/LD valve LD port/LD valve
Cable Entry								12	1/2″ NPT ANSI/ASME B1.20.1

USA: California Proposition 65
WARNING: This product can expose you to chemicals including Lead, which is known to the State of California to cause cancer and birth defects or other reproductive harm. For more information go to www.P65Warnings.ca.gov.

Dwyer

SERIES A3000

PHOTOHELIC® PRESSURE SWITCH/GAGE

3-in-1 Indicating Gage, Lo-Limit and Hi-Limit Control

CALIBRATION SERVICES AVAILABLE

Set points are instantly adjusted with front knobs

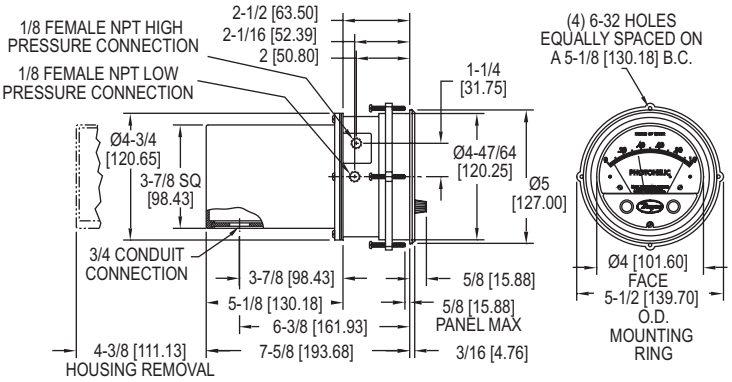

The **Series A3000 Photohelic® Pressure Switch/Gage** functions as versatile, highly repeatable pressure switches combined with a precise pressure gage employing the time-proven Magnehelic® gage design. The Photohelic® switch/gage measures and controls positive, negative or differential pressures of air and compatible gases. Standard models are rated to 25 psig (1.7 bar) with options to 35 (2.4) or 80 (5.5 bar) psig. Two phototransistor actuated, DPDT relays are included for low/high limit control. Easy to adjust set point indicators are controlled by knobs located on the gage face. Individual set point deadband is one pointer width - less than 1% of full-scale. Set points can be interlocked to provide variable deadband - ideal for control of fans, dampers, etc. Gage reading is continuous and unaffected by switch operation, even during loss of electrical power. Choose from full-scale pressure ranges from a low 0-.25 in (0-6 mm) w.c. up to 30 psi (21 bar).

BENEFITS/FEATURES

- 3-in-1 instrument allows the reduction of several instruments with one product, saving inventory, installation time and money
- Patented design and 1% full-scale dead band provides quick response to pressure changes means no delay in switching and chatter-free operation
- A wide range of models that can meet pressure measurement specifications from low to very high

APPLICATIONS

- Air conditioning systems
- Clean rooms
- Fume exhaust systems

SPECIFICATIONS

GAGE SPECIFICATIONS

Service: Air and non-combustible, compatible gases.
Wetted Materials: Consult factory.
Accuracy: ±2% of FS at 70°F (21.1°C). ±3% on -0 and ±4% on -00 models.
Pressure Limits: -20″ Hg to 25 psig (-0.677 to 1.72 bar); MP option: 35 psig (2.41 bar); HP option: 80 psig (5.52 bar).
Temperature Limits: 20 to 120°F (-6.67 to 48.9°C). Low temperature option available.
Process Connections: 1/8″ female NPT.
Size: 4″ (101.6 mm) dial face, 5″ (127 mm) OD x 8-1/4″ (209.55 mm).
Weight: 4 lb (1.81 kg).

SWITCH SPECIFICATIONS

Switch Type: Each set point has 2 form C relays (DPDT).
Repeatability: ±1% of FS.
Electrical Rating: 10 A @ 28 VDC, 10 A @ 120, 240 VAC.
Electrical Connections: Screw terminals. Use 167°F (75°C) copper conductors only.
Power Requirements: 120 VAC, 50/60 Hz; 240 VAC and 24 VAC power optional.
Mounting Orientation: Diaphragm in vertical position. Consult factory for other position orientations.
Set Point Adjustment: Adjustable knobs on face.
Agency Approvals: CE, CSA, UL.

Dwyer

SERIES A3000

PHOTOHELIC® PRESSURE SWITCH/GAGE

3-in-1 Indicating Gage, Lo-Limit and Hi-Limit Control

CALIBRATION SERVICES AVAILABLE

Bezel and front cover (with set point knobs and zero adjustment screw) removed to expose Photohelic® gage set point mechanism. Cover is clear polycarbonate plastic.

Gage pointer and light shutter are mounted on helix and balancing counterweight. Shutter passes through slot in optical limit switch to expose phototransistors to integral infrared light source or mask them depending on applied pressure.

Light shield effectively protects phototransistors from strong outside light sources yet allows free pointer movement. It also gives interior a clean "finished" look.

Optical limit switches are used for reliability and long service life. Attached directly to set pointers, they are individually aligned to assure precise switching accuracy.

Semi-Flexible drive shaft connects to set point knobs.

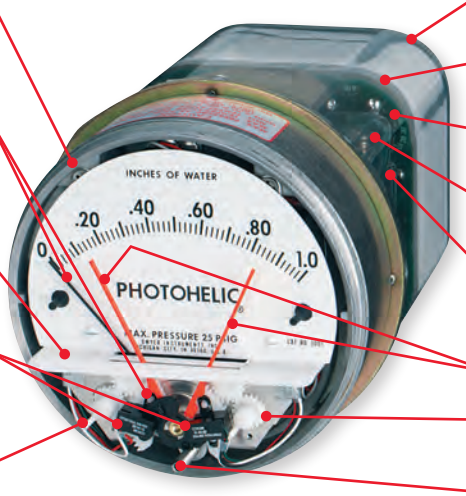

Plastic enclosure protects electronic components and electrical connections.

Polycarbonate connection or terminal board is self-extinguishing.

Glass-epoxy printed circuit boards for durability and performance.

Load relays are DPDT with latching feature for maximum application versatility.

Electronics are designed to operate on 50/60 Hz, 120 volt current with 10% over or under voltage. Special units for other voltages are available.

Switch set pointers show switch settings at all times.

Spring loaded friction clutch prevents operator damage of set point mechanism.

Zero adjustment screw connects to screw in cover to adjust zero pressure reading.

MODEL CHART

Model	Range, in w.c.
A3000-00	0-.25
A3000-0	0-.50
A3001	0-1.0
A3002	0-2.0
A3003	0-3.0
A3004	0-4.0
A3005	0-5.0
A3006	0-6.0
A3008	0-8.0
A3010	0-10
A3015	0-15
A3020	0-20
A3025	0-25
A3030	0-30
A3040	0-40
A3050	0-50
A3060	0-60
A3080	0-80
A3100	0-100
A3150	0-150
Bi-Directional Range	
A3000-00N	.05-.20

Zero Center Ranges	
Model	Range, in w.c.
A3300-0	.25-0-.25
A3301	.5-0-.5
A3302	1-0-1
A3304	2-0-2
A3310	5-0-5
A3320	10-0-10
A3330	15-0-15

Model	Range in w.c. /Air Velocity, F.P.M.
A3000-00AV	0-.25/300-2000
A3000-0AV	0-.50/500-2800
A3001AV	0-1.0/500-4000
A3002AV	0-2.0/1000-5600
A3010AV	0-10/2000-12500
Pitot tube required	

Model	Range, mm w.c.
A3000-6MM	0-6
A3000-10MM	0-10
A3000-25MM	0-25
A3000-50MM	0-50
A3000-80MM	0-80
A3000-100MM	0-100
Zero Center	
A3300-20MM	10-0-10
A3300-30MM	15-0-15

Model	Range, Pascals
A3000-60PA	0-60
A3000-125PA	0-125
A3000-250PA	0-250
A3000-500PA	0-500
A3000-750PA	0-750

Zero Center Ranges	
Model	Range, Pa
A3300-250PA	125-0-125
A3300-500PA	250-0-250

Model	Range, kPa
A3000-1KPA	0-1
A3000-1.5KPA	0-1.5
A3000-2KPA	0-2
A3000-3KPA	0-3
A3000-4KPA	0-4
A3000-5KPA	0-5
A3000-8KPA	0-8
A3000-10KPA	0-10
A3000-15KPA	0-15
A3000-20KPA	0-20
A3000-25KPA	0-25
A3000-30KPA	0-30

Zero Center Ranges	
Model	Range, kPa
A3300-1KPA	.5-0- .5
A3300-3KPA	1.5-0-1.5

OPTIONS

To order add suffix:	Description
-HP	High pressure
-LT	Low temperature (-20°F)
-MP	Medium pressure
-NIST	NIST traceable calibration certificate
-OLS	OEM model
-RMR	Remote mounted relay
-SRH	Single relay activates on increase
-SRL	Single relay activates on decrease
-TAMP	Tamper proof knobs

ACCESSORIES

Model	Description
A-298	Flat flush mounting bracket
A-601	Manual reset switch net

Note: Special models can be built to OEM customers' specifications with scales reading in special pressure units like ounces per square inch, inches of mercury, etc. Square Root Scales reading in FPM or SCFM are also available. Custom logos and special graduations can also be included. Contact factory for minimum quantities and pricing.

Process Tubing Options: See page 453 (Gage Tubing Accessories)

Dwyer

SERIES AT-A3000

ATEX/IECEX APPROVED PHOTOHELIC® PRESSURE SWITCH/GAGE

Photohelic® Switch/Gages in Flameproof ATEX/IECEx Enclosures

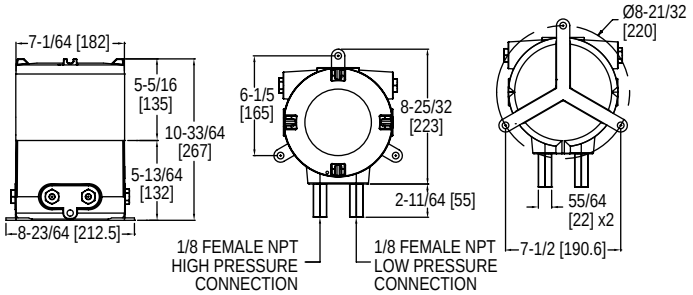

AT-102PA-A3000, shown with VS0 port/valve configuration

Flameproof approved **Series AT-A3000 ATEX/IECEx Approved Photohelic® Pressure Switch/Gage** functions as versatile, highly repeatable pressure switches combined with a precise pressure gage employing the time-proven Magnehelic® gage design. The Photohelic® switch/gage measures and controls positive, negative or differential pressures of air and compatible gases. Two phototransistor actuated, DPDT relays are included for low/high limit control. Easy-to-adjust set point indicators are controlled by knobs located on the gage face (accessible opening case after de-energizing instrument). Set points can be interlocked to provide variable dead band which is ideal for control of fans, dampers, etc. Gage reading is continuous and unaffected by switch operation, even during loss of electrical power. Flameproof enclosures are available in aluminum with a glass window which allows for viewing of set point needles and process pressure.

BENEFITS/FEATURES

- Saves inventory, installation time, and money by consolidating several instruments into one ATEX/IECEx approved product
- Flameproof enclosure with optional glass window and aluminum housing protects the device in hazardous areas while giving local visibility to process pressure and set point status
- Increased response time at low pressures with LD port configuration

APPLICATIONS

- Hazardous area pressure measurement and switching
- Air conditioning systems
- Clean rooms
- Fume exhaust systems

Attention: Check local safety rules and warnings on unit and manual for a correct use of the instrument in hazardous areas.

SPECIFICATIONS

Service: Air and non-combustible, compatible gases.
Wetted Materials: Consult factory.
Housing material: Aluminum.
Finishing: Texture epoxy coat RAL7015.
Accuracy: ±2% of FS at 70°F (21.1°C); ±3% on -0 and ±4% on -00 models.
Pressure Limits: See pressure limit chart.
Temperature Limits: 20 to 120°F (-6.67 to 48.9°C) LT low temperature option to -20°F available (**Note:** Product temperature limits differ from case).
Dial Size: 4″ (101.6 mm).
Mounting Orientation: Diaphragm in vertical position.
Set Point Adjustment: Adjustable knobs on Photohelic® gage face behind enclosure cover. Follow instructions and safety warnings to open cover.

SWITCH SPECIFICATIONS

Switch Type: Each set point has 2 form C relays (DPDT).
Repeatability: ±1% of FS.
Electrical Rating: 10 A @ 28 VDC, 10 A @ 120, 240 VAC.
Electrical Wiring: Screw terminals.
Power Requirements: 120 VAC, 50/60 Hz; 240 VAC and 24 VAC power optional.
Enclosure Rating: IP66 (IP65 for versions VS1, VS2, VL1).
Process Connections: 1/8″ NPT female brass (SS optional).
Electrical Connections: Two 1/2″ NPT female. Cable gland not included.
Weight: 19.8 lb (9 kg).
ATEX Certificate: INERIS 21ATEX0033X.
IECEx Certificate: IECEx INE 21.0064X.
Compliance: ATEX: CE 0080 Ex II 2G Ex db IIC T5, T6 Gb -60°C≤Ta≤+50°C (T6) -60°C≤Ta≤+60°C (T5); II 2D Ex tb IIIC T75°C Db
IECEx: Ex db IIC T5, T6 Gb -60°C≤Ta≤+50°C (T6) -60°C≤Ta≤+60°C (T5) Ex tb IIIC T75°C Db.

RANGE CHART

Model	Range in w.c.	Model	Range in w.c.	Model	Range in w.c.
A3000-00	0 to .25	**A3006**	0 to 6.0	**A3040**	0 to 40
A3000-0	0 to .50	**A3008**	0 to 8.0	**A3050**	0 to 50
A3001	0 to 1.0	**A3010**	0 to 10	**A3060**	0 to 60
A3002	0 to 2.0	**A3015**	0 to 15	**A3080**	0 to 80
A3003	0 to 3.0	**A3020**	0 to 20	**A3100**	0 to 100
A3004	0 to 4.0	**A3025**	0 to 25	**A3150**	0 to 150
A3005	0 to 5.0	**A3030**	0 to 30		

PRESSURE LIMITS

Port/Valve	One Pressure Port Connected	Both Pressure Ports Connected
VS0	10 kPa	10 kPa
VL0	10 kPa	10 kPa
VS1	20 kPa	15 kPa
VS2	40 kPa	20 kPa
VL1	20 kPa	15 kPa

MODEL CHART

Example	AT	-102PA	-A3001	-120VAC	-XSFX	-W	1	VS0	12	AT-102PA-A3001-120VAC-XSFX-W1VS012
Enclosure	AT									ATEX/IECEx approved enclosure
Housing Material		102PA								Aluminum enclosure
Range			A3XXX							Photohelic switch/gage, specify range using range chart
Power				120VAC 240VAC 24VAC						120 VAC 240 VAC 24 VAC
Options					XXX XSFX XXLT					Standard construction and standard temperature limits -6.67 to 48.9 (20 to -120°F) Silicon free and standard temperature limits -6.67 to 48.9 (20 to -120°F) Standard construction and low temperature to -28.8°C (-20°F)
Cover						B W				Blind Glass window
Port/Valve Material							1 2			Brass SS
Port/Valve Configurations								VS0 VL0 VS1 VS2 VL1		STD port/no valve LD port/no valve STD port/STD valve STD port/LD valve LD port/LD valve
Cable Entry									12	1/2″ NPT ANSI/ASME B1.20.1

USA: California Proposition 65
WARNING: This product can expose you to chemicals including Lead, which is known to the State of California to cause cancer and birth defects or other reproductive harm. For more information go to www.P65Warnings.ca.gov.

Dwyer
SERIES 43000

CAPSU-PHOTOHELIC® PRESSURE SWITCH/GAGES

Lo-Limit and Hi-Limit Control, Aluminum or Brass Case Available

CALIBRATION SERVICES AVAILABLE

Set points are instantly adjusted with front knobs.

Series 43000
Capsu-Photohelic® switch/gage

Series 43000
Capsu-Photohelic® switch/gage with brass body

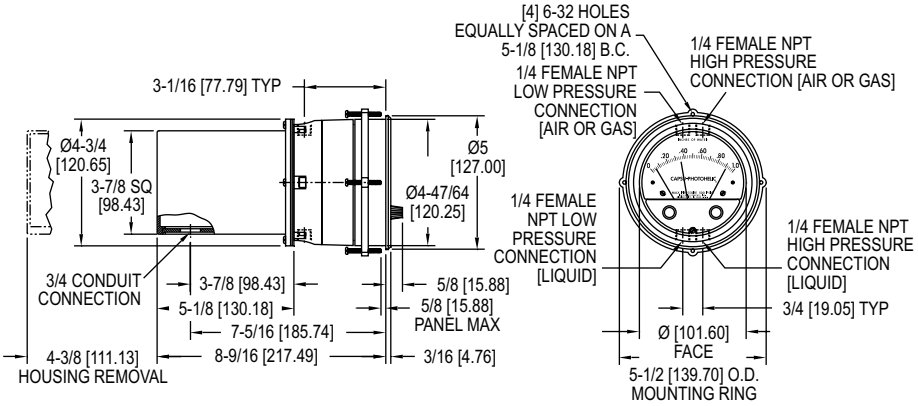

Series 43000 Capsu-Photohelic® Pressure Switch/Gages function as versatile, highly repeatable pressure switches combined with a precise pressure gage employing the time-proven Magnehelic® gage design. The Capsu-Photohelic® switch/gage employs an encapsulated sensing element for use with both liquids and gases at pressures to 500 psig (34 bar). Optional cast brass case is available for water or water based liquids. Two phototransistors actuated, DPDT relays are included for low/high limit control. Easy to adjust set point indicators are controlled by knobs located on the gage face. Individual set point deadband is one pointer width — less than 1% of full-scale. Set points can be interlocked to provide variable deadband — ideal for control of pumps.

BENEFITS/FEATURES

- Gage capsule permits high-pressure usage with small differentials
- Zero and range adjustments outside of gage means no disassembly in normal service
- Time-proven, simple, frictionless movement that permits full-scale readings as low as 0.5 in w.c.
- Photo-electronic relays provide fast-acting switching with variable deadband control for chatter-free operation

APPLICATIONS

- Pump control
- Pumping systems
- Wastewater
- Compatible liquid or gas applications

MODEL CHART			
Model	**Range in w.c.**	**Model**	**Range in w.c.**
43000-0	0-.5	**43050**	0-50
43001	0-1.0	**43060**	0-60
43002	0-2.0	**43080**	0-80
43003	0-3.0	**43100**	0-100
43004	0-4.0	**43150**	0-150
43005	0-5.0	**43200**	0-200
43006	0-6.0	**43300**	0-300
43008	0-8.0	**43400**	0-400
43010	0-10	**43500**	0-500
43015	0-15	**43302**	1-0-1
43020	0-20	**43304**	2-0-2
43025	0-25	**43310**	5-0-5
43030	0-30	**43320**	10-0-10
43040	0-40	**43330**	15-0-15

SPECIFICATIONS

GAGE SPECIFICATIONS
Service: Compatible gases and liquids. Brass case option required for water based liquids.
Wetted Materials: Consult factory.
Accuracy: ±3% of FS at 70°F (21.1°C). ±4% on 43215, 43220 and 43500.
Pressure Limits: -20 Hg to 500 psig (-0.677 to 34.5 bar).
Temperature Limits: 20 to 120°F (-6.67 to 48.9°C). Low temperature option available.
Process Connections: 1/4″ female NPT.
Size: 4″ (101.6 mm) dial face, 5″ (127 mm) OD x 9-3/16″ (233.36 mm).
Weight: 5 lb, 8 oz (2.49 kg). Brass 11 lb, 2 oz (5.05 kg).

SWITCH SPECIFICATIONS
Switch Type: Each set point has 2 form C relays (DPDT).
Repeatability: ±1% of FS.
Electrical Rating: 10 A @ 120 VAC, 6 A @ 240 VAC, 60 Hz res. 10 A @ 28 VDC.
Electrical Connections: Screw terminals.
Power Requirements: 120 VAC, 50/60 Hz; 240 VAC and 24 VAC power optional.
Mounting Orientation: Diaphragm in vertical position. Consult factory for other position orientations.
Set Point Adjustment: Adjustable knobs on face.

OPTIONS	
To order add suffix:	**Description**
B	Brass body; For water based liquids order optional brass case
Example: 43001B	
-24VAC	24 VAC relay pack
-240VAC	240 VAC relay pack
-EXPL	Explosion-proof (NEMA 7 C, D, 9 E, F, G; NEC Class I, Div. 1 and 2, Groups C, D, Class II, Div. 1 and 2, Groups E, F, G, Class III
-NIST	NIST traceable calibration certificate
-RMR	Remote mounted relay
-SRH	Single relay activates on increase
-SRL	Single relay activates on decrease
-TAMP	Tamper proof knobs
-WP	Weatherproof (NEMA 4)
Example: 43001-NIST	
Note: Contact Customer Service for detailed dimension drawings.	

ACCESSORIES	
Model	**Description**
A-298	Flat aluminum bracket for flush mounting

USA: California Proposition 65
⚠**WARNING:** This product can expose you to chemicals including Lead, which is known to the State of California to cause cancer and birth defects or other reproductive harm. For more information go to www.P65Warnings.ca.gov.

Process Tubing Options: See page 453 (Gage Tubing Accessories)

Dwyer

SERIES 3000MR & 3000MRS

PHOTOHELIC® SWITCH/GAGES

Combines Differential Pressure Gage with Low/High Set-Points, Compact Size

CALIBRATION SERVICES AVAILABLE

Shown with optional -SS bezel
Backward compatible+ with Magnehelic® gage

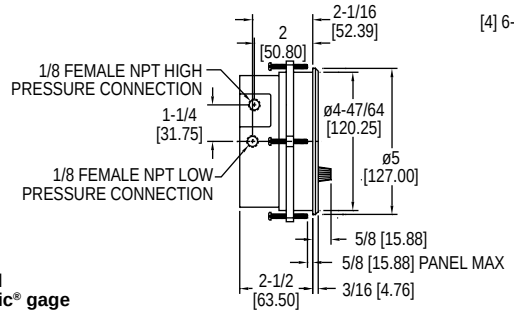

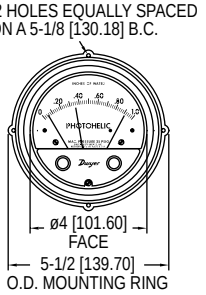

Using solid state technology, the **Series 3000MR & 3000MRS Photohelic® Switch/Gages** combine the functions of a precise, highly repeatable differential pressure switch with a large easy-to-read analog pressure gage employing the durable, time-proven Magnehelic® gage design. Switch setting is easy to adjust with large external knobs on the gage face. Gage reading is unaffected by switch operation - will indicate accurately even if power is interrupted. Solid state design now results in greatly reduced size and weight. Units can be flush mounted or surface mounted with hardware supplied. 3000MR models employ versatile electromechanical relays with gold over silver contacts - ideal for dry circuits. For applications requiring high cycle rates, choose 3000MRS models with SPST (N.O.) solid state relays. All models provide both low and high limit control and include 18-inch (45 cm) cable assemblies for electrical connections.
Compatible with air and other non-combustible, non-corrosive gases, they can be used in systems with pressures to 25 psig (1.725 bar). Optional construction is available for use to either 35 psig (2.42 bar) or 80 psig (5.51 bar).

BENEFITS/FEATURES

- Gage reading unaffected by switch operation and will continue to read pressure even during power loss
- Zero and range adjustments outside of gage means no disassembly in normal service
- Solid-state design allows for switching in high cycle rate applications without degradation
- Optional stainless steel bezel is the same installation diameter as Magnehelic® gage and simplifies field upgrade to Photohelic® switch/gage

APPLICATIONS

- Pneumatic conveying
- Air conditioning systems
- Clean rooms

MODEL CHART

Model	Range, in w.c.	Minor Divs.	Model	Range, in w.c.	Minor Divs.
3000MR-00	0-0.25	.005	**3000MRS-00****	0-0.25	.005
3000MR-0	0-0.5	.01	**3000MRS-0***	0-0.5	.01
3001MR	0-1.0	.02	**3001MRS**	0-1.0	.02
3002MR	0-2.0	.05	**3002MRS**	0-2.0	.05
3003MR	0-3.0	.10	**3003MRS**	0-3.0	.10
3005MR	0-5.0	.10	**3005MRS**	0-5.0	.10
3010MR	0-10	.20	**3010MRS**	0-10	.20
3015MR	0-15	.50	**3015MRS**	0-15	.50
3020MR	0-20	.50	**3020MRS**	0-20	.50
3030MR	0-30	1.0	**3030MRS**	0-30	1.0
3050MR	0-50	1.0	**3050MRS**	0-50	1.0
3100MR	0-100	2.0	**3100MRS**	0-100	2.0
Model	**Range, Pascals**	**Minor Divs.**	**Model**	**Range, Pascals**	**Minor Divs.**
3000MR-60PA**	0-60	2.0	**3000MRS-60PA****	0-60	2.0
3000MR-125PA*	0-125	5.0	**3000MRS-125PA***	0-125	5.0
3000MR-250PA	0-250	5.0	**3000MRS-250PA**	0-250	5.0
3000MR-500PA	0-500	10.0	**3000MRS-500PA**	0-500	10.0
Model	**Range, kPa**	**Minor Divs.**	**Model**	**Range, kPa**	**Minor Divs.**
3000MR-1KPA	0-1.0	.02	**3000MRS-1KPA**	0-1.0	.02
3000MR-3KPA	0-3.0	.10	**3000MRS-3KPA**	0-3.0	.10
3000MR-4KPA	0-4.0	.10	**3000MRS-4KPA**	0-4.0	.10
Model	**Range, mm w.c.**	**Minor Divs.**	**Model**	**Range, mm w.c.**	**Minor Divs.**
3000MR-6MM**	0-6	.20	**3000MRS-6MM****	0-6	.20
3000MR-10MM*	0-10	.50	**3000MRS-10MM***	0-10	.50
3000MR-25MM	0-25	.50	**3000MRS-25MM**	0-25	.50
3000MR-50MM	0-50	1.0	**3000MRS-50MM**	0-50	1.0
3000MR-100MM	0-100	2.0	**3000MRS-100MM**	0-100	2.0
Model	**Range, cm w.c.**	**Minor Divs.**	**Model**	**Range, cm w.c.**	**Minor Divs.**
3000MR-20CM	0-20	.50	**3000MRS-20CM**	0-20	.50

*±3% of full-scale. **±4% of full-scale.

Note: To order, select either MR or MRS suffix to Series 3000 number.
Examples: 3001MR or 3001MRS

SPECIFICATIONS

GAGE SPECIFICATIONS
Service: Air and non-combustible, compatible gases.
Wetted Materials: Consult factory.
Accuracy: ±2% of FS (3000-0 ±3% of FS). (3000-00 ±4% of FS).
Pressure Limit: -20″ Hg. to 25 psig (-0.677 bar to 1.72 bar). MP option: 35 psig (2.41 bar), HP option: 80 psig (5.52 bar).
Temperature Limits: 20 to 120°F (-6.67 to 48.9°C).
Process Connections: 1/8″ female NPT (duplicated side and back).
Size: 4″ (101.6 mm) dial face, 5″ (127 mm) OD x 3-1/8″ (79.38 mm); -SS bezel: 4-3/4″ (120.7 mm) OD x 2-21/32 (67.5 mm).
Weight: 1.8 lb (816 g).

SWITCH SPECIFICATIONS 3000MR
Switch Type: Each set point has 1 form C relays (SPDT).
Relay Contacts: (Resistive load) 1 form C rated 1.0A @ 30 VDC, 0.3A @ 110 VDC or 0.5A @ 125 VAC.
Gold over clad silver - suitable for dry circuits.
Electrical Connections: 18″ (46 cm) cable assembly with 8 conductors. Optional lengths to 100′ (30.5 m).
Power Requirements: 24 VDC, regulated ±10%.
Mounting Orientation: Diaphragm in vertical position. Consult factory for other position orientations.
Set Point Adjustment: Adjustable knobs on face.
Compliance: CE.

SWITCH SPECIFICATIONS 3000MRS
Switch Type: Each set point has a solid state relay.
Switching Voltage: 20-280 VAC (47-63 Hz).
Switching Current: 1.0 amp (AC) max., 0.01 mA (AC) min., (2) SPST NO.
Electrical Connections: 18″ (46 cm) cable assembly with 6 conductors, optional lengths to 100′ (30.5 m).
Power Requirements: 24 VDC, regulated ±10%.
Mounting Orientation: Diaphragm in vertical position. Consult factory for other position orientations.
Set Point Adjustment: Adjustable knobs on face.
Compliance: CE.

OPTIONS

To order add suffix:	Description
-HP	High pressure; increases maximum rated pressure to 80 psig (5.5 bar)
-LT	Low temperature option; for use under 20°F (-6.7°C)
-MP	Medium pressure; increases maximum rated pressure to 35 psig (2.41 bar)
-NIST	NIST traceable calibration certificate
-TAMP	Tamper-proof knobs; require spanner key (supplied) to change set points
-WP	Weatherproof housing option
-SS	304 brushed stainless steel bezel. +Backward compatible with standard Magnehelic® gage installation diameter

Example: 3001MR-SS

ACCESSORIES

Model	Description
A-298	Flat aluminum bracket for flush mounting 3000MR/MRS
A-370	Mounting bracket flush mount 3000MR/MRS bracket. Bracket is then surface mounted. Steel with gray hammertone epoxy finish
A-600	R/C snubber recommended for inductive loads like a solenoid or contactor

ACCESSORIES - STANDARD

Description

Mounting ring, snap ring, 18″ (45 cm) cable assembly, (2) 3/16″ tubing to 1/8″ NPT adapters, (2) 1/8″ NPT pipe plugs, (4) 6-32 x 1-1/4″ RH machine screws (panel mounting), (3) 6-32 x 5/16″ RH machine screws (surface mounting)

Process Tubing Options: See page 453 (Gage Tubing Accessories)

ATEX/IECEX APPROVED PHOTOHELIC® SWITCH/GAGE

3000MR or 3000MRS Series in Flameproof ATEX/IECEx Enclosures

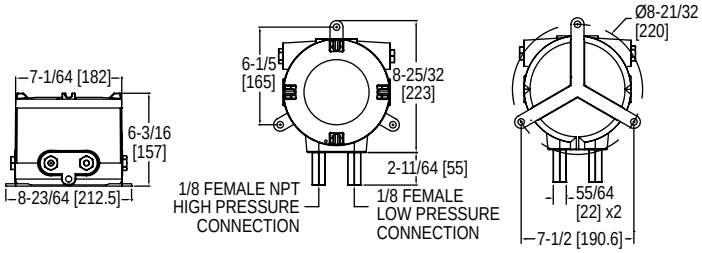

AT-102NA-300MR/MRS, shown with VS0 port/valve configuration

Using solid state technology, the **Series AT-3000MR/MRS ATEX/IECEx Approved Photohelic® Switch/Gage** combines the functions of a precise, highly repeatable differential pressure switch with a large easy-to-read analog pressure gage. Gage reading is unaffected by switch operation and will indicate accurately even if power is interrupted. The AT102-3000MR series employs versatile electromechanical relays with low amperage ratings-ideal for dry circuits. For applications requiring high cycle rates, choose AT102-3000MRS models with SPST (NO) solid state relays. Easy-to-adjust set point indicators are controlled by knobs located on the gage face (accessible opening case after de-energizing instrument). All models provide both low and high limit control. Compatible with air and other non-combustible, non-corrosive gases. Flameproof enclosures are available with a glass window which allows for viewing of set point needles and process pressure. Compatible with air and other non-combustible, non-corrosive gases.

BENEFITS/FEATURES

- Gage reading unaffected by switch operation and will continue to read pressure even during power loss
- Zero and range adjustments outside of gage means no disassembly in normal service
- Solid-state design allows for switching in high cycle rate applications without degradation
- Flameproof enclosure with optional glass window and aluminum housing protects the device in hazardous areas while giving local visibility to process pressure and set point status
- Increased response time at low pressures with LD port configuration

APPLICATIONS

- Hazardous area pressure measurement and switching
- Pneumatic conveying
- Air conditioning systems
- Clean rooms
- Fume exhaust systems

Attention: Check local safety rules and warnings on unit and manual for a correct use of the instrument in hazardous areas.

SPECIFICATIONS

Service: Air and non-combustible, compatible gases.
Wetted Materials: Consult factory.
Housing Material: Aluminum.
Finishing: Texture epoxy coat RAL7015.
Accuracy: ±2% of FS at 70°F (21.1°C). ±3% on -0, -60PA and ±4% on -00 models.
Pressure Limits: See pressure limit chart.
Temperature Limits: 20 to 120°F. (-6.67 to 48.9°C). Option LT low temperature to -20°F (28.8°C) (**Note:** Product temperature limits differ from case).
Power Requirements: 24 VDC, regulated ±10%.
Electrical Wiring: Screw terminals.
Mounting Orientation: Diaphragm in vertical position.
Enclosure Rating: IP66 (IP65 for versions VS1, VS2, and VL1).
Process Connections: 1/8″ NPT female brass (SS optional).
Electrical Connections: Two 1/2″ NPT female. Cable gland not included.
Dial Size: 4″ (101.6 mm).
Set Point Adjustment: Adjustable knobs on face behind enclosure cover. Follow instructions and safety warnings to open cover.
Weight: 13.2 lb (6 kg).
ATEX Certificate: INERIS 21ATEX0033X.
IECEx Certificate: IECEx INE 21.0064X.
Compliance: ATEX: CE 0080 Ex II 2G Ex db IIC T5, T6 Gb -60°C≤Ta≤+50°C (T6) -60°C≤Ta≤+60°C (T5); II 2D Ex tb IIIC T75°C Db
IECEx: Ex db IIC T5, T6 Gb -60°C≤Ta≤+50°C (T6) -60°C≤Ta≤+60°C (T5) Ex tb IIIC T75°C Db.

SWITCH SPECIFICATIONS (3000MR)
Switch Type: Each set point has 1 form C relay (SPDT).
Relay Contacts: (resistive load) 1 form C rated 1.0 A @ 30 VDC, 0.3 A @ 110 VDC or 0.5 A @ 125 VAC. Gold over clad silver - suitable for dry circuits.

SWITCH SPECIFICATIONS (3000MRS)
Switch Type: Each set point has a solid state relay.
Switching Voltage: 20-280 VAC (47 to 63 Hz).
Switching Current: 1.0 amp (AC) max., 0.01 mA (AC) min., (2) SPST NO.

PRESSURE LIMITS

Port/Valve	One Pressure Port Connected	Both Pressure Ports Connected
VS0	10 kPa	10 kPa
VL0	10 kPa	10 kPa
VS1	20 kPa	15 kPa
VS2	40 kPa	20 kPa
VL1	20 kPa	15 kPa

RANGE CHART

Model	Range in w.c.	Minor Divis.	Model	Range in w.c.	Minor Divis.
3000-00	0 to 0.25	0.005	**3000-60PA**	0 to 60	2.0
3000-0	0 to 0.5	0.01	**3000-125PA**	0 to 125	5.0
3001	0 to 1.0	0.02	**3000-250PA**	0 to 250	5.0
3002	0 to 2.0	0.05	**3000-500PA**	0 to 500	10.0

MODEL CHART

Example	AT	-102NA	-3000	MR	-0	-24VDC	-XXX	-W	1	VS0	12	AT-102NA-3000MR-0-24VDC-XXX-W1VS012
Enclosure	AT											ATEX/IECEx approved enclosure
Housing Material		102NA										Aluminum enclosure
Range			3XXX									Specify range using range chart
Relay Type				MR MRS								Electromechanical relays Solid state relays
Additional Range					XX							Specify additional range using range chart
Power Requirements						24 VDC 24 VAC						Power requirements 24 VDC Power requirements 24 VAC
Options							XX XSF X LT					Standard construction Silicone free Standard temperature limit -6.67 to 48.9 (20 to -120°F) Low temperature to -28.8°C (-20°F)
Cover								B W				Blind Glass window
Port/Valve Material									1 2			Brass SS
Port/Valve Configurations										VS0 VL0 VS1 VS2 VL1		STD port/no valve LD port/no valve STD port/STD valve STD port/LD valve LD port/LD valve
Cable Entry											12	1/2″ NPT ANSI/ASME B1.20.1

USA: California Proposition 65
WARNING: This product can expose you to chemicals including Lead, which is known to the State of California to cause cancer and birth defects or other reproductive harm. For more information go to www.P65Warnings.ca.gov.

Dwyer
SERIES MP

MINI-PHOTOHELIC® DIFFERENTIAL PRESSURE SWITCH/GAGE

Compact, Low Cost Switch Gage

CALIBRATION SERVICES AVAILABLE

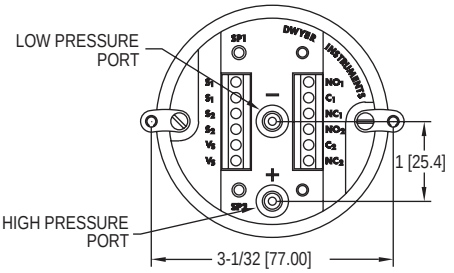

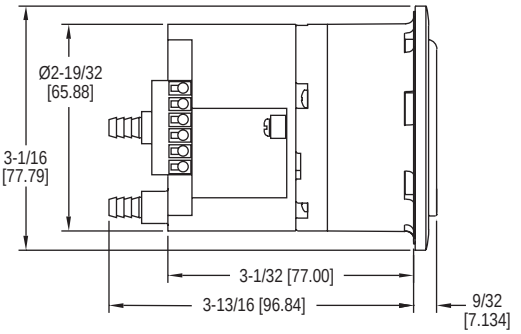

The **Series MP Mini-Photohelic® Differential Pressure Switch/Gage** combines the time proven Minihelic® II differential pressure gage with two SPDT switching set points. The Mini-Photohelic® switch/gage is designed to measure and control positive, negative, or differential pressures consisting of non-combustible and non-corrosive gases. Gage reading is independent of switch operation. Switching status is visible by LED indicators located on the front and rear of the gage. Set points are adjusted with push-buttons on the back of the unit.

BENEFITS/FEATURES

- Gage reading unaffected by switch operation and will continue to read pressure even during power loss
- Visible switch status LED provides indication of set point switching state
- Compact design but with the power of larger devices can meet the same application specifications

APPLICATIONS

- Fume hoods
- Dust collection
- Pneumatic conveying
- Clean room

MODEL CHART

Model	Range, Inches of Water	Model	Range, Pa
MP-000	0-0.5	**MP-125PA**	0-125
MP-001	0-1.0	**MP-250PA**	0-250
MP-002	0-2.0	**MP-500PA**	0-500
MP-003	0-3.0	**Model**	**Range, kPa**
MP-005	0-5.0		
MP-010	0-10	**MP-1KPA**	0-1
MP-020	0-20	**MP-3KPA**	0-3

OPTIONS

To order add suffix:	Description
-NIST	NIST traceable calibration certificate
-NPT	1/8″ male NPT connections

Example: MP-000-NPT; **Note:** Allow additional lead time.

ACCESSORIES

Model	Description
A-301	Static pressure tip for 1/4″ metal tubing connection
A-302	Static pressure tip for 3/16″ and 1/8″ I.D. plastic or rubber tubing
A-302F-A	303 SS static pressure tip with mounting flange; for 3/16″ ID rubber or plastic tubing; 4″ insertion depth; includes mounting screws
A-489	4″ straight static pressure tip with flange

SPECIFICATIONS

GAGE SPECIFICATIONS

Service: Air and non-combustible, compatible gases.
Wetted Materials: Consult factory.
Accuracy: ±5% of FS @ 70ºF (21.1ºC). Gage face mounted in vertical position.
Pressure Limits: 30 psig (2.067 bar).
Temperature Limits: 20 to 120ºF (-6.7 to 49ºC).
Process Connections: Barbed for 3/16″ ID tubing (STD); 1/8″ male NPT (optional).
Size: 4-1/8″ (104.78 mm) depth x 3-1/16″ (77.79 mm) diameter.
Weight: 23 oz (652 g).

SWITCH SPECIFICATIONS

Switch Type: (2) SPDT relays.
Electrical Rating: 5 A @ 120/240 VAC resistive; 5 A @ 30 VDC.
Electrical Connections: Screw type terminal block. Accepts 22-12 AWG wire.
Power Requirements: 24 VDC / 24 VAC 50/60 Hz 4 watts.
Mounting Orientation: Gage face in vertical position.
Set Point Adjustment: Push-buttons.
Standard Accessories: (2) mounting screws, (1) .050″ hex allen wrench.
Agency Approvals: CE, cULus.

Process Tubing Options: See page 453 (Gage Tubing Accessories)

HVAC DIFFERENTIAL PRESSURE SWITCHES

With Dual Scale Field Adjustable Set Point Knob

ADPS

EDPS

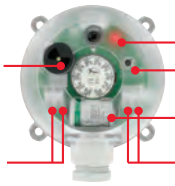

BDPA

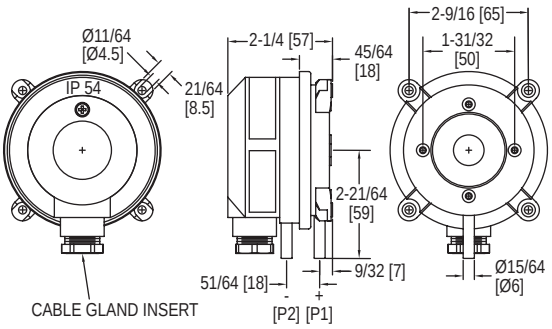

ADPS

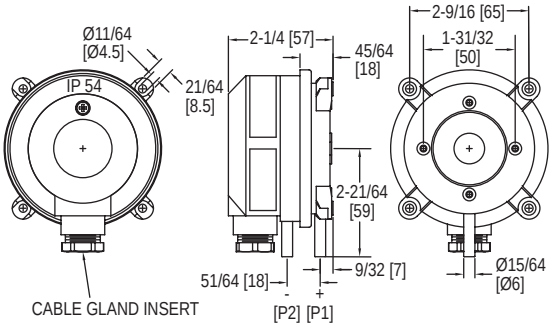

EDPS

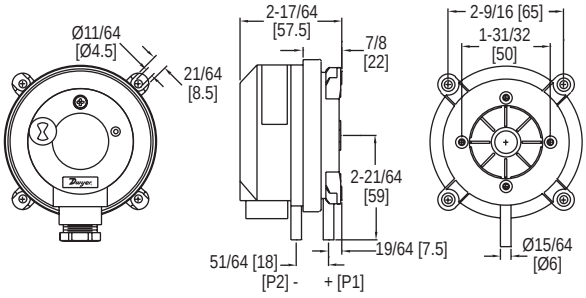

BDPA

The **Series ADPS/EDPS/BDPA HVAC Differential Pressure Switches** are designed for pressure, vacuum, and differential pressures. The dual scaled adjustment knob in inches water column and pascals allows changes to the switching pressure to be made without a pressure gage. The ADPS/EDPS/BDPA are available with settings from 0.08 in w.c. (20 Pa) up to 20 in w.c. (5000 Pa). The silicone diaphragm and PA 6.6 body make the series ADPS ideal for use with air and other noncombustible gases. Series EDPS models meet UL508 and are constructed of plenum rated plastics. The series BDPA Adjustable Differential Pressure Alarms offer a versatile range of configurations allowing utilization of their many features including buzzer and LED notification, and battery or line powered. The compact size, adjustment knob and low cost make the ADPS/EDPS/BDPA the perfect choice for HVAC applications.

BENEFITS/FEATURES

- Adjustment knob changes switching pressure easily with a pressure gage reducing components for application
- Low cost device makes it an excellent solution in BAS and HVAC applications requiring duct control and monitoring
- Relay contact allows simple integration with DDC or building systems

APPLICATIONS

- Air filter and ventilator monitoring
- Industrial cooling circuits
- Fire-protection damper control
- Ventilation duct monitoring
- Fan heater overheating protection
- Heat exchanger frost protection

SPECIFICATIONS

Service: Air and non-combustible, compatible gases.
Wetted Materials: ADPS: Diaphragm material: Silicone; Housing material: POM; Switch body: PA 6.6; Cover: Polystyrene; EDPS: Diaphragm material: Silicone; Housing material: Switch body: PA 6.6; Cover: Polystyrene; Materials UL 94 V-0 rated.
Temperature Limits: Process and ambient temperature from -4 to 185°F (-20 to 85°C).
Storage: -40 to 185°F (-40 to 85°C).
Pressure Limits: Max. operating pressure: 40 in w.c. (10 kPa) for all pressure ranges.
Switch Type: Single-pole double-throw (SPDT).
Electrical Rating: Max. 1.5 A res./0.4 A ind./250 VAC, 50/60 Hz; Max. switching rate: 6 cycles/min.
Electrical Connections: Push-on screw terminals. M20x1.5 with cable strain relief or optional 1/2″ NPT.
Process Connections: 5/16″ (7.94 mm) outside diameter tubing, 1/4″ (6.0 mm) inside diameter tubing.
Enclosure Rating: NEMA 13 (IP54).
Mounting Orientation: Vertically, with pressure connections pointing downwards.
Mechanical Working Life: Over 10^6 switching operations.
Weight: 4.4 oz (125 g).
Agency Approvals: ETL approved to UL508 and CSA C22.2#14 (EDPS only).

MODEL CHART - ADPS

Model	Set Point Range in w.c. (Pa)	Approx. Dead Band @ Min Set Point in w.c. (Pa)	Approx. Deadband @ Max Set Point in w.c. (Pa)
ADPS-08-2-N	0.08 to 1.20 (20-300)	0.04 (10)	0.05 (12)
ADPS-04-2-N	0.12 to 1.60 (30-400)	0.06 (15)	0.09 (23)
ADPS-03-2-N	0.20 to 2.00 (50-500)	0.08 (20)	0.09 (23)
ADPS-05-2-N	0.80 to 4.00 (200-1000)	0.4 (100)	0.5 (130)
ADPS-06-2-N	2.00 to 10.00 (500-2500)	0.6 (150)	0.8 (200)
ADPS-07-2-N	4.00 to 20.00 (1000-5000)	1.0 (250)	1.4 (350)

Note: For optional 1/2″ NPT conduit connection, change -2-N to-1-N. Models that include installer kit add -C to the end of the model number (-2-N cable gland models only). Installer kit includes two static tips and 7 ft of PVC tubing. Order installer kit separately with 1/2″ NPT conduit connection models. See A-481 in the accessories list. Consult factory for bulk packaging option.

MODEL CHART - EDPS

Model	Set Point Range in w.c. (Pa)	Approx. Dead Band @ Min Set Point in w.c. (Pa)	Approx. Dead Band @ Max Set Point in w.c. (Pa)
EDPS-08-1-N	0.08 to 1.20 (20-300)	0.04 (10)	0.05 (12)
EDPS-04-1-N	0.12 to 1.60 (30-400)	0.06 (15)	0.09 (23)
EDPS-03-1-N	0.20 to 2.00 (50-500)	0.08 (20)	0.09 (23)
EDPS-05-1-N	0.80 to 4.00 (200-1000)	0.4 (100)	0.5 (130)
EDPS-06-1-N	2.00 to 10.00 (500-2500)	0.6 (150)	0.8 (200)
EDPS-07-1-N	4.00 to 20.00 (1000-5000)	1.0 (250)	1.4 (350)

Note: For optional M20 cable gland connection, change -1-N to-2-N.

MODEL CHART - BDPA

Model	Set Point Range in w.c. (Pa)	Approx. Dead Band @ Min Set Point in w.c. (Pa)	Approx. Dead Band @ Max Set Point in w.c. (Pa)
BDPA-08-2-N	0.08 to 1.20 (20 to 300)	0.04 (10)	0.05 (12)
BDPA-04-2-N	0.12 to 1.60 (30 to 400)	0.06 (15)	0.09 (23)
BDPA-03-2-N	0.20 to 2.00 (50 to 500)	0.08 (20)	0.09 (23)
BDPA-05-2-N	0.80 to 4.00 (200 to 1000)	0.4 (100)	0.5 (130)
BDPA-06-2-N	2.00 to 10.00 (500 to 2500)	0.6 (150)	0.8 (200)
BDPA-07-2-N	4.00 to 20.00 (1000 to 5000)	1.0 (250)	1.4 (350)

ACCESSORIES

Model	Description
A-288	"L" type metal mounting bracket with screws
A-289	"S" type metal mounting bracket with screws
A-480	Plastic static pressure tip
A-481	Installer kit, includes 2 plastic static pressure tips and 7′ (2.1 m) of PVC tubing
A-489	4″ straight static pressure tip with flange

A-480

Process Tubing Options: See page 453 (Gage Tubing Accessories)

Dwyer

SERIES AT-ADPS

ATEX/IECEX APPROVED DIFFERENTIAL PRESSURE SWITCH

The ADPS in Flameproof ATEX/IECEx Enclosure

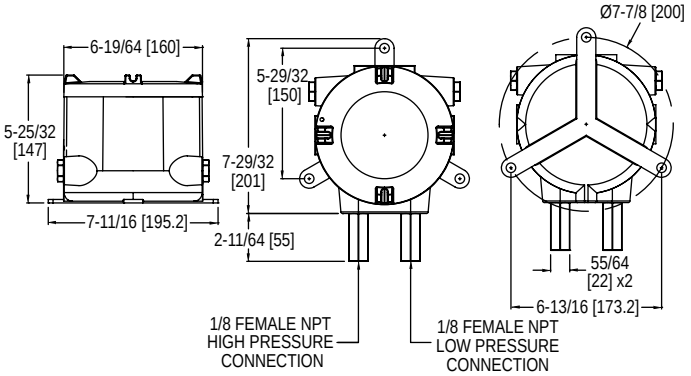

AT-101NA-ADPS, shown with VS0 port valve configuration

The **Series AT-ADPS ATEX/IECEx Approved Differential Pressure Switch** is designed for pressure, vacuum, and differential pressure applications in hazardous areas. The dual scaled adjustment knob in inches water column and Pascals allows changes to the switching pressure to be made without a pressure gage. The switch is available with settings from 0.08 in w.c. (20 Pa) up to 20 in w.c. (5000 Pa). The silicone diaphragm makes this series ideal for use with air and other noncombustible gases. Flameproof enclosures are available in aluminum and can include a glass window for viewing set point status on the adjustment knob.

BENEFITS/FEATURES

- Flameproof enclosure with optional glass window and aluminum housing protects the device in hazardous areas while giving local visibility to set point status
- Increased response time at low pressures with LD port configuration

APPLICATIONS

- Hazardous area pressure switch
- Air filter and ventilator monitoring
- Ventilation duct monitoring
- Industrial cooling circuits
- Fan heater overheating protection
- Fire-protection damper control
- Heat exchanger frost protection

PRESSURE LIMITS		
Port/Valve	One Pressure Port Connected	Both Pressure Ports Connected
VS0	10 kPa	10 kPa
VL0	10 kPa	10 kPa

SPECIFICATIONS

Service: Air and non-combustible, compatible gases.
Wetted Materials: Diaphragm material: Silicone; Housing material: Switch body: PA 6.6 and POM; Cover: Polystyrene; Brass or SS depending on pressure connections chosen.
Temperature Limits: Process and ambient temperature from -4 to 185°F (-20 to 85°C) (**Note:** Product temperature limits differ from case).
Pressure Limits: See pressure limit chart.
Switch Type: SPDT.
Electrical Rating: Standard: Max. 1.5 A @ 250 VAC, max. switching rate: 6 cycles/min.
Set Point Adjustment: Hand knob on pressure switch inside case. (De-energize before opening case).
Mounting Orientation: Vertically, with pressure connections pointing downwards.
Mechanical Working Life: Over 10^6 switching operations.
Enclosure Rating: IP66.
Housing Material: Aluminum.
Finishing: Texture epoxy coat RAL7015.
Process Connections: 1/8″ NPT female brass (SS optional).
Electrical Connections: Two 1/2″ NPT female. Cable gland not included.
Weight: 10.4 lb (4.7 kg).
ATEX Certificate: INERIS 21ATEX0033X.
IECEx Certificate: IECEx INE 21.0064X.
Compliance: ATEX: CE 0080 Ex II 2G Ex db IIC T5, T6 Gb -60°C≤Ta≤+50°C (T6) -60°C≤Ta≤+60°C (T5); II 2D Ex tb IIIC T75°C Db
IECEx: Ex db IIC T5, T6 Gb -60°C≤Ta≤+50°C (T6) -60°C≤Ta≤+60°C (T5) Ex tb IIIC T75°C Db.

MODEL CHART											
Example	**AT**	**-101NA**	**-ADPS**	**-08**	**-2**	**-N**	**-W**	**1**	**VS0**	**12**	**AT-101NA-ADPS-08-2-N-W1VS012**
Enclosure	AT										ATEX/IECEx approved enclosure
Housing Material		101NA									Aluminum enclosure
Series			ADPS								ADPS adjustable differential pressure switch
Range				08 04 03 05 06 07							.08 to 1.2 in w.c. (20 to 300 Pa) .12 to 1.6 in w.c. (30 to 400 Pa) .2 to 2 in w.c. (50 to 500 Pa) .8 to 4 in w.c. (200 to 1000 Pa) 2 to 10 in w.c. (500 to 2500 Pa) 4 to 20 in w.c. (1000 to 5000 Pa)
Connection					2						Internal cable gland
Switch						N					1.5 A @ 250 VAC
Cover							B W				Blind Glass window
Port/Valve Material								1 2			Brass SS
Port/Valve Configurations									VS0 VL0		STD port/no valve LD port/no valve
Cable Entry										12	1/2″ NPT ANSI/ASME B1.20.1

USA: California Proposition 65
WARNING: This product can expose you to chemicals including Lead, which is known to the State of California to cause cancer and birth defects or other reproductive harm. For more information go to www.P65Warnings.ca.gov.

Dwyer
SERIES 1800

LOW DIFFERENTIAL PRESSURE SWITCH FOR GENERAL INDUSTRIAL SERVICE

Set Points from 0.07 in w.c. to 85 in w.c. Repetitive Accuracy within 2%

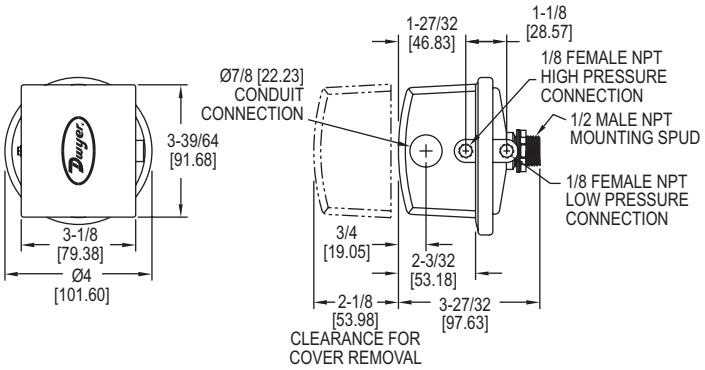

Essential for industrial environments, the **Series 1800 Low Differential Pressure Switch for General Industrial Service** combines small size and low price with 2% repeatability for all but the most demanding applications. Set point adjustment inside the mounting stud permits mounting the switch on one side of a wall or panel with adjustment easily accessible on the opposite side. UL and CSA listed, and FM approved.

BENEFITS/FEATURES

- Compact size and repeatability provide a high-value switch useful in many industrial applications
- Designed for panel and wall mounting to easily meet mounting requirements in most industrial settings
- Pressure ranges from 0.07 in w.c. to 85 in w.c. make this switch suitable for a wide range of applications

APPLICATIONS

- Process applications
- Mechanical equipment control

SPECIFICATIONS

Service: Air and non-combustible, compatible gases.
Wetted Materials: Consult factory.
Temperature Limits: -30 to 180°F (-34 to 82.2°C); 1823-00: -20 to 180°F (-28.9 to 82.2°C).
Pressure Limits: 10 psig (68.95 kPa) continuous, 25 psig (172.4 kPa) surge.
Switch Type: Single-pole double-throw (SPDT).
Repeatability: ±2%.
Electrical Rating: 15 A @ 120-480 VAC, 60 Hz. Resistive 1/8 HP @125 VAC, 1/4 HP @ 250 VAC, 60 Hz. De-rate to 10 A for operation at high cycle rates.
Electrical Connections: 3 screw type, common, normally open and normally closed.
Process Connections: 1/8″ female NPT.
Mounting Orientation: Diaphragm in vertical position. Consult factory for other position orientations.
Set Point Adjustment: Screw type inside mounting spud.
Weight: 1 lb 5 oz (595 g).
Agency Approvals: CE, CSA, FM, UL. Optional-EXPL explosion-proof enclosure does not possess any agency approvals.

MODEL CHART

Model	Operating Range, in w.c.	Approximate Deadband At Min. Set Point	Approximate Deadband At Max. Set Point
1823-00	0.07 to 0.22	0.05	0.05
1823-0	0.15 to 0.5	0.06	0.06
1823-1	0.3 to 1.0	0.08	0.08
1823-2	0.5 to 2.0	0.10	0.12
1823-5	1.5 to 5.0	0.14	0.28
1823-10	2.0 to10	0.18	0.45
1823-20	3 to 22	0.35	0.70
1823-40	5 to 44	0.56	1.10
1823-80	9 to 85	1.30	3.0

OPTIONS

Weatherproof Housing

16 ga. steel enclosure with gasketed cover (NEMA 4, IP66) for wet or oily conditions. Withstands 200 hour salt spray test. Wt. 5-1/2 lb (2.5 kg). Switch must be factory installed.

Note: To order, change 1823 base number to 1824 and add -WP suffix.
Example: 1824-1-WP

Explosion-Proof Housing

Cast iron base with aluminum cover. Rated Class I, Div. 1 and 2, Group D; Class II, Div. 1 and 2, Groups E, F, G; Class III and NEMA 7 CD, 9 EFG. Wt. 7-1/2 lb (3.4kg). Switch must be factory installed.

Note: To order, change 1823 base number to 1824 and add -EXPL suffix.
Example: 1824-1-EXPL

MIL Environmental Construction

Unlisted Model 1820 can be furnished with a special sealed snap switch for protection against high humidity, fungus and/or military applications. Similar to Model 1823 except deadband is slightly greater and some lower setpoints may not be possible.

Note: To order, add -MIL suffix. **Example:** 1820-2-MIL

ACCESSORIES

Model	Description
A-302F-A	303 SS static pressure tip with mounting flange; for 3/16″ ID rubber or plastic tubing; 4″ insertion depth; includes mounting screws
A-302F-B	303 SS static pressure tip with mounting flange; for 3/16″ rubber or plastic tubing; 6″ insertion depth; includes mounting screws
A-302F-C	303 SS static pressure tip with mounting flange; for 3/16″ rubber or plastic tubing; 8″ insertion depth; includes mounting screws
A-389	Mounting bracket; 16 ga. steel, zinc plated and dichromate dipped for corrosion resistance; provides rugged, permanent mounting and speeds installation
A-489	4″ straight static pressure tip with flange
A-491	6″ straight static pressure tip with flange
A-493	8″ straight static pressure tip with flange

Process Tubing Options: See page 453 (Gage Tubing Accessories)

Dwyer

SERIES AT-1800

ATEX/IECEX APPROVED LOW DIFFERENTIAL PRESSURE SWITCH

The 1800 in Flameproof ATEX/IECEx Enclosure

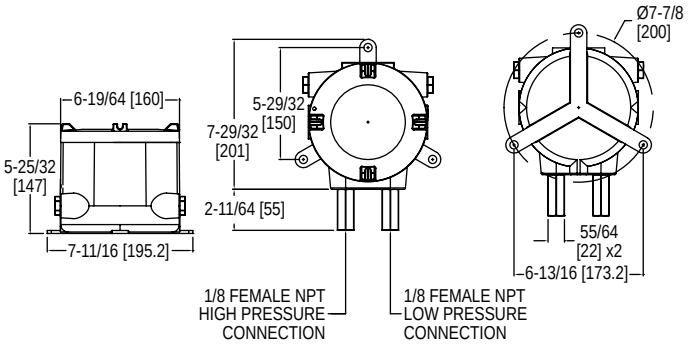

AT-101NA-1800, shown with VS0 port/valve configuration

Essential for industrial environments, the **Series AT-1800 ATEX/IECEx Approved Low Differential Pressure Switch** combines small size with 2% repeatability. Set point adjustment inside the switch allows for set point settings across 9 ranges from the low of .07 in w.c. to a maximum 85 in w.c. differential pressure. Series AT-1800 flameproof enclosures are available in aluminum and are ideal for low pressure hazardous area applications. Various housing options such as an overpressure relief valve or external set point adjustment knob are available. External set point knob allows adjustment without opening the enclosure.

BENEFITS/FEATURES

- Compact size and repeatability provides a high-value switch for many industrial applications
- External set point knob provides easy access that simplifies making adjustments without opening enclosure
- Flameproof enclosure protects the device in hazardous areas
- Increased response time at low pressures with LD port configuration

APPLICATIONS

- Hazardous area pressure switch
- Process applications
- Mechanical equipment control

Attention: Check local safety rules and warnings on unit and manual for a correct use of the instrument in hazardous area.

SPECIFICATIONS

Service: Air and non-combustible, compatible gases.
Wetted Materials: Consult factory.
Temperature Limits: -30 to 180°F (-34 to 82.2°C); 1823-00, -20 to 180°F (-28.9 to 82.2°C) (**Note:** Product temperature limits differ from case).
Pressure Limits: See pressure limit chart.
Switch Type: SPDT.
Repeatability: ±2% FS.
Electrical Rating: 15 A @ 120-480 VAC, 60 Hz. Resistive 1/8 HP @ 125 VAC, 1/4 HP @ 250 VAC, 60 Hz. De-rate to 10 A for operation at high cycle rates.
Mounting Orientation: Diaphragm in vertical position.
Set Point Adjustment: Screw type inside mounting spud internal to switch. External set point adjustment knob optional.
Enclosure Rating: IP66 (IP65 for versions VS1, VS2, VL1).
Housing Material: Aluminum.
Finishing: Texture epoxy coat RAL7015.
Process Connections: 1/8″ NPT female brass (SS optional).
Electrical Connections: Two 1/2″ NPT female. Cable gland not included.
Weight: 10.5 lb (4.8 kg).
ATEX Certificate: INERIS 21ATEX0033X.
IECEx Certificate: IECEx INE 21.0064X.
Compliance: ATEX: CE 0080 Ex II 2G Ex db IIC T5, T6 Gb -60°C≤Ta≤+50°C (T6) -60°C≤Ta≤+60°C (T5); II 2D Ex tb IIIC T75°C Db
IECEx: Ex db IIC T5, T6 Gb -60°C≤Ta≤+50°C (T6) -60°C≤Ta≤+60°C (T5) Ex tb IIIC T75°C Db.

PRESSURE LIMITS

Port/Valve	One Pressure Port Connected	Both Pressure Ports Connected
VS0	10 kPa	10 kPa
VL0	10 kPa	10 kPa
VS1	20 kPa	15 kPa
VS2	40 kPa	20 kPa
VL1	20 kPa	15 kPa

MODEL CHART

Example	AT	-101NA	-1823	-00	-B	1	VS0	12	AT-101NA-1823-00-B1VS012
Enclosure	AT								ATEX/IECEx approved enclosure
Housing Material		101NA							Aluminum enclosure
Series			1823						1823 differential pressure switch
Range				00 0 1 2 5 10 20 40 80					0.08-0.22 in w.c. (18-56 Pa) (suggested VL0 or VL1) 0.15-0.5 in w.c. (38-127 Pa) (suggested VL0 or VL1) 0.3-1.0 in w.c. (76-254 Pa) (suggested VL0 or VL1) 0.5-2.0 in w.c. (127-508 Pa) (suggested VL0 or VL1) 1.5-5.0 in w.c. (381-1270 Pa) (suggested VL0 or VL1) 2.0-10 in w.c. (0.5-2.5 kPa) 3-22 in w.c. (0.76-5.6 kPa) 5-44 in w.c. (1.27-11.17 kPa) 9-85 in w.c. (2.28-21.6 kPa)
Cover					B				Blind
Port/Valve Material						1 2			Brass SS
Port/Valve Configurations							VS0 VL0 VS1 VS2 VL1		STD port/no valve LD port/no valve STD port/STD valve STD port/LD valve LD port/LD valve
Cable Entry								12	1/2″ NPT ANSI/ASME B1.20.1

USA: California Proposition 65
WARNING: This product can expose you to chemicals including Lead, which is known to the State of California to cause cancer and birth defects or other reproductive harm. For more information go to www.P65Warnings.ca.gov.

Dwyer
SERIES 1900

COMPACT LOW DIFFERENTIAL PRESSURE SWITCHES

Set Points from 0.07 to 20 in w.c. Repetitive Accuracy within 3%

Series 1910 switch with conduit enclosure off. Shows electric switch and set point adjustment screw located on same side for easy installation.

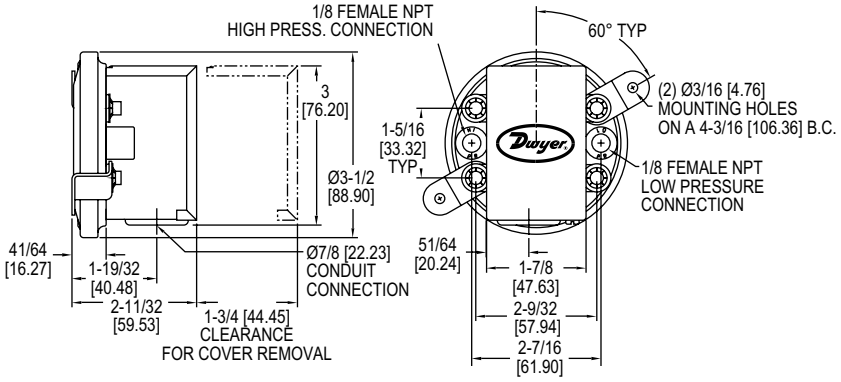

The Dwyer-engineered force-motion amplifier increases the leverage of diaphragm movement and results in a switch with excellent sensitivity and repeatability.

Our most popular **Series 1900 Compact Low Differential Pressure Switches** combine advanced design and precision construction to make these switches able to perform many of the tasks of larger, costlier units. Designed for air conditioning service, they also serve many fluidics, refrigeration, oven and dryer applications. Series 1900 switches have set points from 0.07 to 20 in w.c. (1.8 to 508 mm). Set point adjustment is easy with range screw located inside conduit enclosure. Internal location helps prevent tampering. UL, CE and CSA listed, and FM approved. For use with air or compatible gages.

BENEFITS/FEATURES

- Compact size and repeatability, provides a high-value switch for many industrial and OEM applications
- Wide range of models from 0.07 in w.c. to 20 in w.c. can meet exacting OEM specifications for a low pressure switch
- Range screw protected inside enclosure provides simplifies making adjustments but prevents tampering

APPLICATIONS

- Air conditioning refrigeration coil icing detection; defrost cycle initiation
- Clogged filter detection
- Variable air volume controller

SPECIFICATIONS

Service: Air and non-combustible, compatible gases.
Wetted Materials: Consult factory.
Temperature Limits: -30 to 180°F (-34 to 82.2°C).
Pressure Limits: 45 in w.c. (11.2 kPa) continuous, 10 psig (68.95 kPa) surge.
Switch Type: Single-pole double-throw (SPDT).
Repeatability: ±3%.
Electrical Rating: 15 A @ 120-480 VAC, 60 Hz. Resistive 1/8 HP @125 VAC, 1/4 HP @ 250 VAC, 60 Hz. Derate to 10 A for operation at high cycle rates.
Electrical Connections: 3 screw type, common, normally open and normally closed.
Process Connections: 1/8″ female NPT.
Mounting Orientation: Diaphragm in vertical position. Consult factory for other position orientations.
Set Point Adjustment: Screw type inside conduit enclosure.
Weight: 1 lb 4.5 oz (581 g).
Compliance: CE, CSA, FM, and UL. Optional-EXPL explosion-proof enclosure does not possess any compliance.

MODEL CHART

Model	Operating Range in w.c.	Approximate Deadband At Min. Set Point	Approximate Deadband At Max. Set Point
1910-00	0.07 to 0.15	0.04	0.04
1910-0	0.15 to 0.5	0.10	0.10
1910-1	0.40 to 1.6	0.15	0.16
1910-5	1.40 to 5.5	0.30	0.30
1910-10	3.0 to 11.75	0.40	0.40
1910-20	4.0 to 20.0	0.40	0.50

ACCESSORIES

Model	Description
A-302F-A	303 SS static pressure tip with mounting flange; for 3/16″ ID rubber or plastic tubing; 4″ insertion depth; includes mounting screws
A-329	Street ell; brass adaptor for applications requiring right angle connections; two required for differential pressures
A-399	Duct pressure monitor kit; for use with standard or manual reset model switches; includes mounting flange, tubing and adapters
A-489	4″ straight static pressure tip with flange

OPTIONS

Weatherproof Housing

16 ga. steel enclosure with gasketed cover (NEMA 4, IP66) for wet or oily conditions. Withstands 200 hour salt spray test. Wt. 5-1/2 lb (2.5 kg). Switch must be factory installed.

Note: To order, change 1910 base number to 1911, add -WP suffix.
Example: 1911-1-WP

Explosion-Proof Housing

Cast iron base with brass cover. Rated Class I, Groups D; Class II, Div. 2, Groups E, F, G; Class III and NEMA 7, 9 NEMA 3. (7 lb). Switch must be factory installed.

Note: To order, change 1910 base number to 1911, add -EXPL suffix.
Example: 1911-1-EXPL

Manual Reset Option (Model 1900 MR)

Includes special snap switch which latches on pressure increase above the setpoint. Switch must be manually reset after pressure drops below the setpoint. Available on -1, -5,-10 or -20 ranges only. Option is not UL, CSA or FM listed. For use only in single positive pressure applications.

Note: To order, change 1910 base number to 1900, add -MR suffix.
Example: 1900-10-MR

Manual reset option

USA: California Proposition 65
WARNING: This product can expose you to chemicals including Lead, which is known to the State of California to cause cancer and birth defects or other reproductive harm. For more information go to www.P65Warnings.ca.gov.

Process Tubing Options: See page 453 (Gage Tubing Accessories)

Dwyer

SERIES AT-1900

ATEX/IECEX APPROVED COMPACT LOW DIFFERENTIAL PRESSURE SWITCHES

The 1900 in Flameproof ATEX/IECEx Enclosure

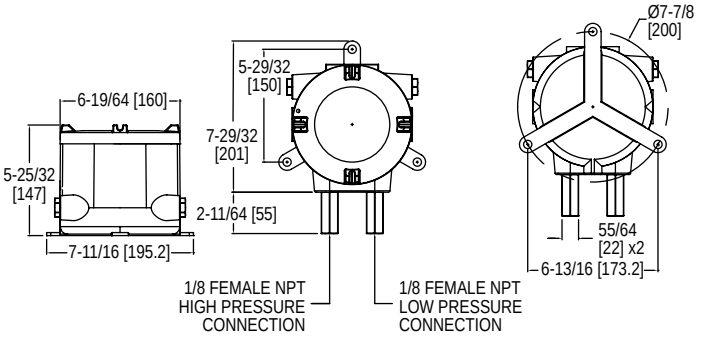

AT-101NA-1900, shown with VS0 port/valve configuration

Series AT-1900 ATEX/IECEx Approved Compact Low Differential Pressure Switches is our most popular switch and is now available in a flameproof package. This pressure switch combines advanced design and precision construction to make these switches able to perform many of the tasks of larger, costlier units. For air and non-combustible compatible gases, the Series AT-1900 switches have set points from 0.07 to 20 in w.c. (1.8 to 508 mm). Set point adjustment is easy with range screw located inside the switch enclosure. Series AT-1900 switches are available in aluminum enclosures and ideal for low pressure, hazardous area applications.

BENEFITS/FEATURES

- Flameproof enclosure protects the device in hazardous areas
- Compact size and repeatability provide a high-value switch for many industrial and OEM applications
- Wide range of models from 0.07 in w.c. to 20 in w.c. can meet exacting OEM specifications for a low pressure switch
- Range screw protected inside switch enclosure prevents tampering
- Increased response time at low pressures with LD port configuration

APPLICATIONS

- Hazardous area low pressure applications
- Air conditioning refrigeration coil icing detection; defrost cycle initiation
- Clogged filter detection
- Variable air volume controller

Attention: Check local safety rules and warnings on unit and manual for a correct use of the instrument in hazardous area.

SPECIFICATIONS

Service: Air and non-combustible, compatible gases.
Wetted Materials: Consult factory.
Temperature Limits: -30 to 180°F (-34 to 82.2°C) (**Note:** Product temperature limits differ from case).
Pressure Limits: See pressure limit chart.
Switch Type: SPDT.
Repeatability: ±3% FS.
Electrical Rating: 15 A @ 120-480 VAC, 60 Hz. Resistive 1/8 HP @ 125 VAC, 1/4 HP @ 250 VAC, 60 Hz. Derate to 10 A for operation at high cycle rates.
Mounting Orientation: Diaphragm in vertical position.
Set Point Adjustment: Screw type on pressure switch inside the enclosure accessible by hole with plug on housing. Set point regulation must be done with instrument de-energized. Follow instructions and safety warning to open cover.
Enclosure Rating: IP66.
Housing Material: Aluminum.
Finishing: Texture epoxy coat RAL7015.
Process Connections: 1/8″ NPT female brass (SS optional).
Electrical Connections: Two 1/2″ NPT female. Cable gland not included.
Weight: 10.5 lb (4.8 kg).
ATEX Certificate: INERIS 21ATEX0033X.
IECEx Certificate: IECEx INE 21.0064X.
Compliance: ATEX: CE 0080 Ex II 2G Ex db IIC T5, T6 Gb -60°C≤Ta≤+50°C (T6) -60°C≤Ta≤+60°C (T5); II 2D Ex tb IIIC T75°C Db
IECEx: Ex db IIC T5, T6 Gb -60°C≤Ta≤+50°C (T6) -60°C≤Ta≤+60°C (T5) Ex tb IIIC T75°C Db.

PRESSURE LIMITS

Port/Valve	One Pressure Port Connected	Both Pressure Ports Connected
VS0	10 kPa	10 kPa
VL0	10 kPa	10 kPa

MODEL CHART

Example	AT	-101NA	-1910	-00	-B	1	VS0	12	AT-101NA-1910-00-B1VS012
Enclosure	AT								ATEX/IECEx approved enclosure
Housing Material		101NA							Aluminum enclosure
Series			1910						1910 differential pressure switch
Range				00					0.07-0.15 in w.c. (17.5-37 Pa)
				0					0.15-0.55 in w.c. (37.5-137 Pa)
				1					0.40-1.6 in w.c. (100-398 Pa)
				5					1.4-5.5 in w.c. (348.5-1368 Pa)
				10					3.0-11.75 in w.c. (747-2924 Pa)
				20					4.0-20.0 in w.c. (996-4977 Pa)
Cover					B				Blind
Port/Valve Material						1			Brass
						2			SS
Port/Valve Configurations							VS0		STD port/no valve
							VL0		LD port/no valve
Cable Entry								12	1/2″ NPT ANSI/ASME B1.20.1

USA: California Proposition 65
WARNING: This product can expose you to chemicals including Lead, which is known to the State of California to cause cancer and birth defects or other reproductive harm. For more information go to www.P65Warnings.ca.gov.

Dwyer

SERIES MDS

MINIATURE PRESSURE SWITCH

Shock and Vibration Resistant, Lightweight and Compact, Gold Contacts

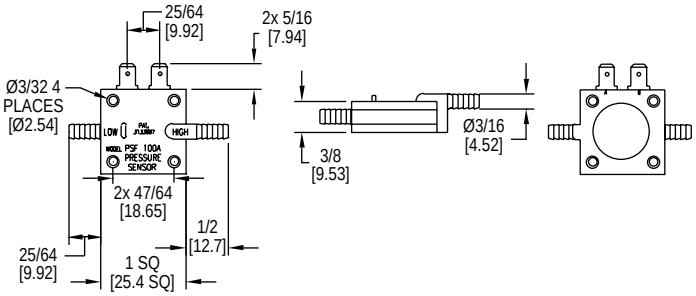

The **Series MDS Miniature Pressure Switch** is designed with a double diaphragm to protect false actuation due to shock and vibration. This low cost pressure switch has a minimum 20 million cycle life expectancy, and an extremely fast response time, making this an ideal device for OEM orders.

BENEFITS/FEATURES

- Low cost, long service life and fast response time is suitable for a wide range of OEM uses
- Lightweight but shock and vibration resistant for tough applications
- Gold contacts help ensure a clean connection without dirt or oxidation

APPLICATIONS

- Air proving
- Cleaning and purification
- Ventilation flow
- Heavy equipment and machinery
- Pressure monitoring
- Exhaust ducts

MODEL CHART

Model	Set Point in w.c.	Model	Set Point in w.c.
MDS-0	0.5	**MDS-6**	6.0
MDS-1	1.0	**MDS-8**	10.0
MDS-2	1.5	**MDS-10**	15.0
MDS-3	2.0	**MDS-12**	30.0
MDS-4	3.0	**MDS-14**	50.0

SPECIFICATIONS

Switch Type: SPST normally open.
Switching Media: Air or compatible fluids on “high” side.
Pressure Limits: Set point <3.0 in w.c.: 8 psi; Set point >3.0 in w.c.: 15 psi.
Current Rating: Gold contact switch providing maximum 40 mA resistive load allowing for life in excess of 20 million cycles.
Temperature Limits: 40 to 150°F (4 to 66°C).
Electrical Connections: Brass tab-type for use with quick disconnections.
Pressure Connections: Two barbed ports for use with 1/8″-3/16″ ID tubing.
Housing: Polycarbonate.
Diaphragm Material: Polyurethane.
Operating Voltage: AC/DC - 30 V or less with resistive load.
Weight: Less than 0.353 oz (10 g).

USA: California Proposition 65
⚠**WARNING:** This product can expose you to chemicals including Lead, which is known to the State of California to cause cancer and birth defects or other reproductive harm. For more information go to www.P65Warnings.ca.gov.

Process Tubing Options: See page 453 (Gage Tubing Accessories)

SERIES MDA

MINIATURE ADJUSTABLE PRESSURE SWITCH

Adjustable Set Points from 0.1 to 100 in w.c.

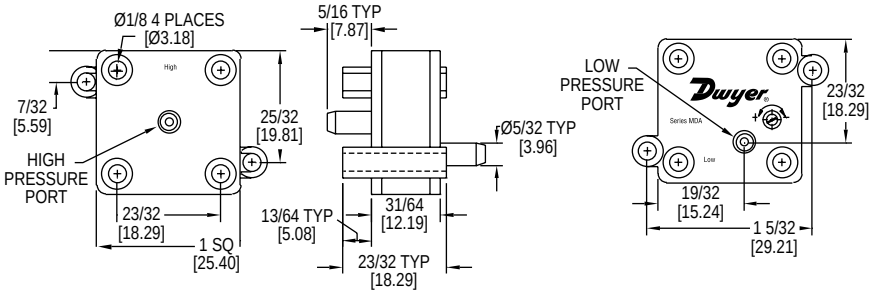

Series MDA Miniature Adjustable Pressure Switch is used to sense differential pressure. The switch features field adjustable set point and gold inlay contacts. The lightweight and compact size make the MDA ideal for any application with space constraints. Applications include industrial, HVAC, pump and motor control, medical, automotive, pools and spas.

BENEFITS/FEATURES

- Air or fluid on high side permits multiple uses where both air and liquids exist
- Small and lightweight for applications where space is constrained
- Gold contacts help ensure a clean connection without dirt or oxidation

APPLICATIONS

- Industrial
- Medical
- HVAC
- Pump and motor control
- Automotive
- Pools and spas

MODEL CHART

Model	Min. Set Point in w.c. (mbar)	Max. Set Point in w.c. (mbar)
MDA-011-T	0.1 (0.25)	0.5 (1.25)
MDA-111	0.5 (1.25)	2.0 (4.98)
MDA-211	2.0 (4.98)	15 (37.37)
MDA-311	15 (37.37)	60 (149.3)
MDA-411	60 (149.3)	100 (249.10)

SPECIFICATIONS

Switch Type: SPST normally open.
Switching Media: Air (compatible fluids on “high” side).
Pressure Limits: MDA-0XX: 4 psi; MDA-1XX: 8 psi; MDA-2XX: 8 psi; MDA-3XX: 15 psi; MDA-4XX: 30 psi.
Current Rating: 40 mA resistive; Cycle life: More than 20 million cycles.
Operating Temperature: 40 to 150°F (4 to 66°C).
Storage Temperature: -46 to 150°F (-43 to 66°C).
Contacts: 18K gold inlay.
Electrical Connections: Terminals - 0.187″ x 0.20: spade (recessed) for use with quick disconnects.
Pressure Connections: Smooth port 5/32″ diameter for 1/8″ ID tubing.
Housing: Polycarbonate.
Diaphragm Material: Polyurethane (MDA-0XX: PTFE).
Operating Voltage: AC/DC - 30 V or less with resistive load.
Mounting: Use #4 screws through mounting lugs or #2 screws through eyelets.
Weight: Less than 0.353 oz (10 g).

Process Tubing Options: See page 453 (Gage Tubing Accessories)

Dwyer

SERIES 1831

DPDT LOW DIFFERENTIAL PRESSURE SWITCHES

Manual Reset, No Power Required

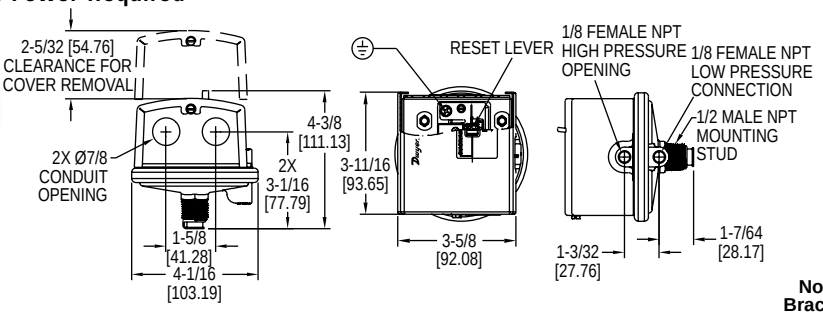

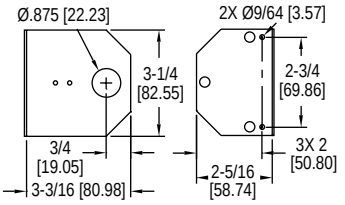

A-389 mounting bracket

Note: Shown with included mounting bracket. Bracket can rotate and be tightened at any angle.

One of our most popular differential pressure switches is now available with a DPDT switch and manual reset. The **Series 1831 DPDT Low Differential Pressure Switches** combine small size with 4% set point repeatability. Absolutely no power is required to operate the DPDT switch. Set point adjustment on the switch is easily accessible for modifying the set point.

The Series 1831 DPDT Low Differential Pressure Switches with Manual Reset eliminate common problems associated with typical high duct static cutout installations. Since the 1831 requires absolutely no power to drive its outputs, a separate power loop and its associated additional wiring and conduit is alleviated, reducing material and labor installation costs. Both control contacts of the Series 1831 activate at the same time. The potential of the lead switch shutting down the fan preventing the lag switch from sending an alarming signal to the DDC is no longer a probable system liability. Potential costly maintenance calls are diminished. Unlike typical switches that possess only a single conduit entry for both control loops, the Series 1831 provides two conduit connections simplifying wiring while eliminating additional conduit tees.

BENEFITS/FEATURES

- No power to operate DPDT switch means no additional wiring or conduit reduces material and installation labor costs
- Easy access for modifying set point simplifies adjustment
- Both control contacts activate at the same time eliminating system issues where lead switch activities prevent the lagging switch from sending a signal

APPLICATIONS

- High duct static cutout applications
- HVAC

MODEL CHART		
Model	**Description**	**Range (in w.c.)**
1831-1-RA-S	Manual reset DPDT, activate on increase	2.5 to 9
1831-2-RA-S	Manual reset DPDT, activate on increase	7.5 to 23

SPECIFICATIONS	
Service: Air and non-combustible, compatible gases. **Wetted Materials:** Consult factory. **Temperature Limits:** -30 to 180°F (-34 to 82.2°C). **Pressure Limits:** 10 psig (68.95 kPa) continuous, 25 psig (172.4 kPa) surge. **Switch Type:** 2 SPDT. **Actuation Time Difference:** 1 millisecond maximum actuation delay between contacts. **Repeatability:** ±4% max.	**Electrical Rating:** 4 A @ 125/250 VAC. **Electrical Connections:** Screw type terminal block. **Process Connections:** 1/8″ female NPT. **Mounting Orientation:** Diaphragm in vertical position. Consult factory for other position orientations. **Set Point Adjustment:** Screw type inside mounting spud. **Weight:** 1 lb 2 oz (522 g).

ACCESSORIES	
Model	**Description**
A-302F-A	303 SS static pressure tip with mounting flange; for 3/16″ ID rubber or plastic tubing; 4″ insertion depth; includes mounting screws
A-302F-B	303 SS static pressure tip with mounting flange; for 3/16″ rubber or plastic tubing; 6″ insertion depth; includes mounting screws
A-302F-C	303 SS static pressure tip with mounting flange; for 3/16″ rubber or plastic tubing; 8″ insertion depth; includes mounting screws
A-489	4″ straight static pressure tip with flange
A-491	6″ straight static pressure tip with flange
A-493	8″ straight static pressure tip with flange

Process Tubing Options: See page 453 (Gage Tubing Accessories)

SERIES 1640

FLOATING CONTACT NULL SWITCH FOR HIGH AND LOW ACTUATION

Visual Set Point Adjustment, Adjustable Null Zone

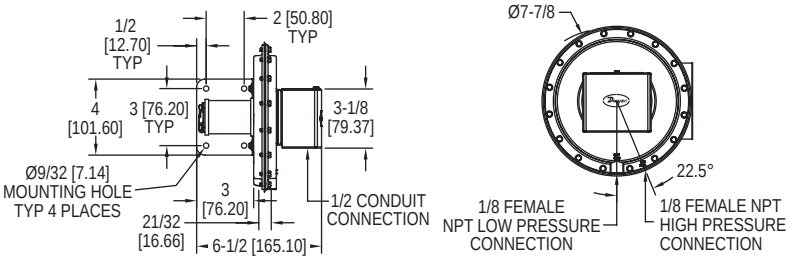

The unique electric switch design in the **Series 1640 Floating Contact Null Switch for High and Low Actuation** is another Dwyer Instruments, LLC innovation. The Dwyer® Model 1640 Differential Pressure Switch resembles the high precision large diaphragm Series 1630 switches. However, the Model 1640 is equipped with a single pole, double throw floating contact switch (not snap acting) so it functions as a null switch.

As the diaphragm moves in response to pressure changes, it moves the floating contact to cause switching action at two preset points with no switching action between these points. The "high" circuit will be closed when rising pressure differential reaches the preset level. The "low" circuit will be closed when falling pressure differential reaches the preset level.

BENEFITS/FEATURES

- Floating "null" switch supports applications requiring two set point actions such as open and close damper control
- Visible set point indicator simplifies operation and trouble shooting
- Large diaphragm provides low range accuracy providing precise control

APPLICATIONS

- Damper positioning
- Duct air control

SPECIFICATIONS	
Service: Air and non-combustible, compatible gases. **Wetted Materials:** Consult factory. **Temperature Limits:** -30 to 110°F (-34.4 to 43.3°C). **Pressure Limits:** 10 psig (68.95 kPa) continuous, 25 psig (172.4 kPa) surge. **Switch Type:** SPDT floating contact (not snap action). **Electrical Rating:** Non-inductive — 2.5 A @ 110 VAC; 1.5 A @ 220 VAC; 1 A @ 24 VDC; 0.5 A @ 110 VAC; Inductive —	1 A @ 110 VAC; 0.5 A @ 220 VAC; 0.5 A @ 24 VDC (de-rate 70-80% for very slow pressure changes). **Electrical Connections:** 3 screw type. **Process Connections:** 1/8″ female NPT. **Mounting Orientation:** Diaphragm in vertical position. Consult factory for other position orientations. **Set Point Adjustment:** Screw type. **Weight:** 4 lb 13 oz (2.18 kg). **Compliance:** CE.

MODEL CHART			
	Ranges	**Adjustable Null Span**	
Model	**in w.c.**	**Min. Set Point**	**Max. Set Point**
1640-0	.01 to 0.2	.01	.03
1640-1	0.2 to 1.0	.02	.06
1640-2	1.0 to 4.0	.03	.12

Process Tubing Options: See page 453 (Gage Tubing Accessories)

Dwyer

SERIES 1620

SINGLE AND DUAL PRESSURE SWITCH

High Reliability, Repetitive Accuracy within ±1%

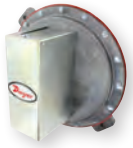

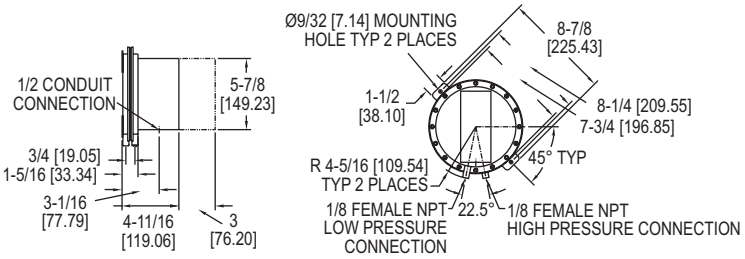

On the **Series 1620 Single and Dual Pressure Switch** our old faithful switch design is still best where highest precision combined with diaphragm sealed leak proof construction and mounting simplicity are required. Model 1626 and 1627 differential pressure switches are identical in design and construction except that Model 1626 has a single electric switch and Model 1627 has dual electric switches. Model 1627 can therefore provide dual control when required. It can be set to open or close two independent electrical circuits, each preset for its own actuation pressure. Both units have diaphragm sealed motion take outs providing maximum protection against leakage.

BENEFITS/FEATURES
- Single or dual action switches support consistent designs with similar models, but with the ability to match specific application needs
- Sealed diaphragm provides leak-proof construction for high accuracy and precision control

APPLICATIONS
- Damper positioning
- Duct air control

MODEL CHART

Model	Operating Range in w.c.	Approximate Deadband		Adj. Diff. Between Set Points
		Min. Set Point	Max. Set Point	
1626-1	.15 to 1.5	.10	.20	-
1626-5	.5 to 6.0	.15	.35	-
1626-10	2.0 to 11	.25	.65	-
1626-20	8.0 to 24	.50	1.20	-
1627-1	.15 to 1.5	.10	.20	0.5
1627-5	.5 to 6.0	.15	.35	1.2
1627-10	2.0 to 11	.25	.65	2.3
1627-20	8.0 to 24	.50	1.20	5.0

SPECIFICATIONS

Service: Air and non-combustible, compatible gases.
Wetted Materials: Consult factory.
Temperature Limits: -30 to 130°F (-34.4 to 54.4°C).
Pressure Limits: Max. 50 in w.c. (12.44 kPa) continuous, 2 psig (13.79 kPa surge.
Switch Type: 1626 SPDT; 1627, (2) SPDT.
Repeatability: ±1%.
Electrical Rating: 15 A @ 120-480 VAC, 60 Hz. Resistive, 1/8 HP @ 125 VAC,1/4 HP @ 250 VAC, 60 Hz.
Electrical Connections: 3 screw type, common, normally open and normally closed.
Process Connections: 1/8″ female NPT.
Mounting Orientation: Diaphragm in vertical position. Consult factory for other position orientations.
Set Point Adjustment: Screw adjustment.
Weight: Model 1626, 3 lb, 9.8 oz (1.64 kg); Model 1627, 3 lb, 11.8 oz (1.69 kg).
Agency Approvals: CE.

OPTIONS

To order add suffix:	Description
-MIL	MIL environmental construction

ACCESSORIES

Model	Description
A-302F-A	303 SS static pressure tip with mounting flange; for 3/16″ ID rubber or plastic tubing; 4″ insertion depth; includes mounting screws
A-489	4″ straight static pressure tip with flange

SERIES 1630

LARGE DIAPHRAGM PRESSURE SWITCH

Visual Set Point Adjustment in 5 Standard Ranges, 0.05 in to 12 in w.c. Repetitive Accuracy within ±1%

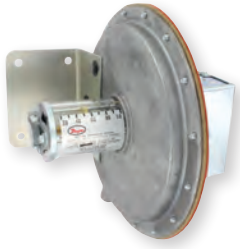

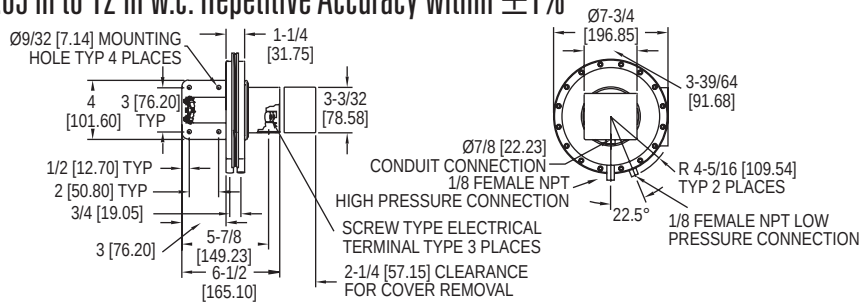

On the **Series 1630 Large Diaphragm Pressure Switch** our highest precision conventional large diaphragm pressure switch provides maximum dependability. In addition, it incorporates a visible set point indicator for maximum convenience. UL and CSA listed, FM approved for general service. Electrical capability of 15 amps handles most small electrical loads. For use only with air or compatible gases.

BENEFITS/FEATURES
- Visible set point indicator simplifies operation and trouble shooting
- Large diaphragm provides low range accuracy providing precise control
- Current loads of up to 15 amps supports most small electrical loads supporting a broader range of HVAC and Process applications without the need for additional relays and components

APPLICATIONS
- Damper positioning
- Air conditioning
- Duct air control
- Industrial service

MODEL CHART

Model	Operating Range in w.c.	Approximate Deadband	
		Min. Set Point	Max. Set Point
1638-0	0.05 to 0.25	0.04	0.05
1638-1	0.20 to 1.0	0.04	0.06
1638-2	1.0 to 3.0	0.06	0.08
1638-5	2.0 to 6.0	0.07	0.25
1638-10	3.0 to 12	0.11	0.30

SPECIFICATIONS

Service: Air and non-combustible, compatible gases.
Wetted Materials: Consult factory.
Temperature Limits: -30 to 110°F (-34.4 to 43.3°C).
Pressure Limits: 10 psig (68.95 kPa) continuous, 25 psig (172.4 kPa) surge.
Switch Type: SPDT.
Repeatability: ±1%.
Electrical Rating: 15 A @ 120-480 VAC, 60 Hz. Resistive 1/8 HP @ 125 VAC, 1/4 HP @ 250 VAC, 60 Hz.
Electrical Connections: 3 screw type, common, normally open and normally closed.
Process Connections: 1/8″ female NPT.
Mounting Orientation: Diaphragm in vertical position. Consult factory for other position orientations.
Set Point Adjustment: Screw type with enclosed scale.
Weight: 3 lb 3 oz (1.50 kg).
Agency Approvals: CSA, FM, UL.

OPTIONS

MIL Environmental Construction

Unlisted Model 1635 can be furnished with a special sealed snap switch for protection against high humidity, fungus and/or military applications. Similar to Model 1638 except deadband is slightly greater and some lower setpoints may not be available.

Note: To order, specify Model 1635-(Range No.)-MIL and required set point.

ACCESSORIES

Model	Description
A-302F-A	303 SS static pressure tip with mounting flange; for 3/16″ ID rubber or plastic tubing; 4″ insertion depth; includes mounting screws
A-489	4″ straight static pressure tip with flange

Process Tubing Options: See page 453 (Gage Tubing Accessories)

Dwyer

SERIES 1996

GAS PRESSURE SWITCH

Compact, Low Cost, 1.4 to 20 in w.c. Range

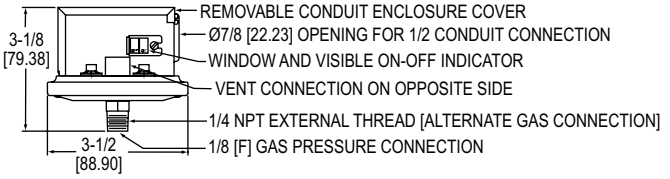

Reliable and convenient, the **Series 1996 Gas Pressure Switch** serves as a compact, low cost switch for gas fired furnaces and equipment. Pressure ranges for both models are ideal for high or low gas pressure interlock. Visible set point and on-off indicators add convenience in servicing. Use either NO or NC contacts on SPDT switch. Bottom connection has both 1/8″ female and 1/4″ male threads for pipe nipple or coupling. Top connection vents diaphragm chamber to outside or to furnace combustion chamber. Mount switch with diaphragm in a horizontal position and gas pressure connection at bottom. Used with natural, manufactured or LP gas.❶❷

BENEFITS/FEATURES
- Visible set point and on-off indicator simplifies operation and trouble shooting
- Compact size and low cost make it ideal for gas fired or gas equipment OEM applications

APPLICATIONS
- Gas furnaces
- Natural, manufactured or LP gas applications

SPECIFICATIONS

Service: Air, natural and manufactured gas, LP gas.
Wetted Materials: Consult factory.
Temperature Limits: 32 to 110°F (0 to 43.3°C). -30 to 110°F (-34.4 to 43.3°C) for dry gas or dry air.
Pressure Limits: 45 in w.c. (11.2 kPa) continuous; 10 psig (68.95 kPa) surge.
Switch Type: SPDT.
Electrical Rating: 15A @ 120-480 VAC, 60 Hz. Resistive 1/8 H.P. @ 125 VAC, 1/4 H.P. @ 250 VAC 60 Hz.
Electrical Connections: 3 screw type, common, normally open, normally closed.
Process Connections: 1/8″ female NPT or 1/4″ male NPT.
Vent Connection: 1/8″ female NPT.
Mounting Orientation: Diaphragm in horizontal position. Consult factory for other position orientations.
Set Point Adjustment: Screw type with visible indicator, inside conduit enclosure.
Weight: 1 lb 2.3 oz (349 g).
Compliance: CE, CSA, FM, UL.

MODEL CHART

Model	Range (in w.c.)	Model	Range (in w.c.)
1996-5	1.4 to 5.5	**1996-20**	4-20

❶Explosion-Proof Alternative: See page 55 (Series 1950)
❷Explosion-Proof Alternative: See page 55 (Series 1950G)
Process Tubing Options: See page 453 (Gage Tubing Accessories)

SERIES PG

GAS PRESSURE/DIFFERENTIAL PRESSURE SWITCHES

External Adjustment, Visible Dial, Hermetically Sealed Snap or Mercury Switch

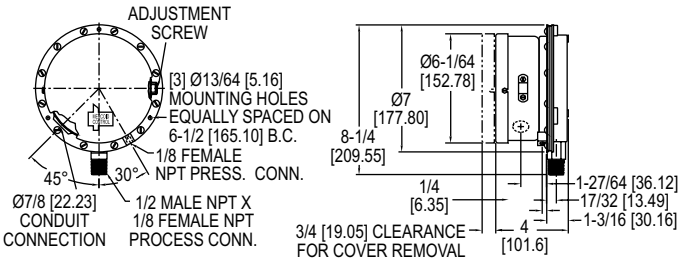

The **Series PG Gas Pressure/Differential Pressure Switch** has a large sensitive diaphragm and a reliable time proven mechanical design. For use with air and other compatible gases, they feature excellent ±1% of full-scale repeatability, clear easy-to-read scale and convenient external set point adjustment.
Application flexibility is assured by a large variety of switching options including SPST, SPDT, DPST and DPDT; opening or closing on increasing pressure, vacuum or differential. PR and PRL models add manual reset operation on increasing or decreasing pressure. Mercury switches or hermetically sealed snap switches are available where high humidity would be a problem. If vibration or other factors preclude the use of mercury, snap switches can be provided. Standard housing is NEMA 1. Optional enclosures can be supplied for weather resistant requirements.

BENEFITS/FEATURES
- Clear easy-to-read scale and external set point adjustment simplifies operation and trouble shooting
- Large diaphragm provides accuracy for precise control
- Multiple switching options meet the design of applications

APPLICATIONS
- Natural, manufactured or LP gas applications

SPECIFICATIONS

Wetted Materials: Fairprene, brass, steel, and aluminum.
Temperature Limits: -10 to 180°F (-23 to 82°C).
Pressure Limit: Single pressure use on high side: Sustained pressure: 15 psig (1.0 bar); Surge limit: 20 psig (1.4 bar). Differential pressure use: Sustained pressure, range P1: 2 psig (.14 bar); Sustained pressure, range P2: 10 psig (0.7 bar).
Enclosure Rating: General purpose. Weatherproof optional.
Repeatability: ±1% of full range.
Switch Type: SPST mercury switch, SPDT mercury switch, SPDT snap switch, or SPDT hermetically sealed snap switch. Optional DPDT.
Electrical Rating: SPDT mercury: 4A @ 120 VAC/VDC, 2A @ 240 VAC/VDC. SPST mercury: 6A @ 120 VAC/VDC, 3A @ 240 VAC/VDC. SPDT Snap: 15A @ 120 VAC, 8A @ 240 VAC, 0.5A @ 120 VDC, 0.25A @ 240 VDC. SPDT H.S. Silver Snap: 5A @ 125/250 VAC, 30 VDC resistive. SPDT H.S. Gold snap: 1A @ 125 VAC, 30 VDC resistive.
Electrical Connections: Screw type.
Conduit Connection: 7/8″ (22.23 mm) hole for 1/2″ (12.7 mm) conduit hub.
Process Connection: 1/2″ male NPT and 1/8″ female NPT used for single positive pressure or high differential pressure, 1/8″ female NPT used for single vacuum or low differential pressure.
Mounting Orientation: Vertical.
Set Point Adjustment: External screw.
Weight: 4.5 lb (2 kg).
Deadband: See model chart.
Compliance: FM, UL for mercury switch models. UL only on snap switch models.

MODEL CHART

Model	Range	Max. Deadband	Switch Type	Model	Range	Max. Deadband	Switch Type
PG-153-P1	1-30 in w.c. (.25-7.47 kPa)	1.9 in w.c. (0.47 kPa)	SPDT mercury	**PG-7000-153-P1**	1-30 in w.c. (.25-7.45 kPa)	4 in w.c. (1.0 kPa)	SPDT snap
PG-153-P2	0.5-5 psid (0.3-.345 bar)	0.4 psid (0.38 bar)	SPDT mercury	**PG-7000-153-P2**	0.5-5 psid (.03-.345 bar)	.5 psid (.035 bar)	SPDT snap
PG-3-P1	1-30 in w.c. (.25-7.47 kPa)	1.3 in w.c. (0.32 kPa)	SPST mercury*	**PG-7000-153HG-P1**	1-30 in w.c. (.25-7.47 kPa)	4 in w.c. (1.0 kPa)	SPDT hermetically sealed gold snap
PG-3-P2	0.5-5 psid (.03-.345 bar)	0.3 psid (0.21 kPa)	SPST mercury*				

*SPST switches shown are close on increase of pressure.
Note: For open on increase of pressure replace 3 in middle of model number with 2. **Example:** PG-2-P1.

USA: California Proposition 65
⚠**WARNING:** This product can exposure to chemicals including Lead, which is known to the State of California to cause cancer and birth defects or other reproductive harm. For more information go to www.P65Warnings.ca.gov

Dwyer

SERIES 1950

EXPLOSION-PROOF DIFFERENTIAL PRESSURE SWITCH

Compact, Low Cost, Explosion-proof and Weatherproof

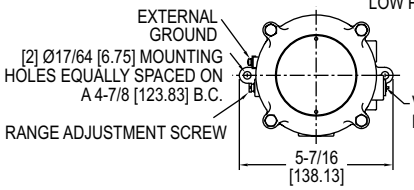

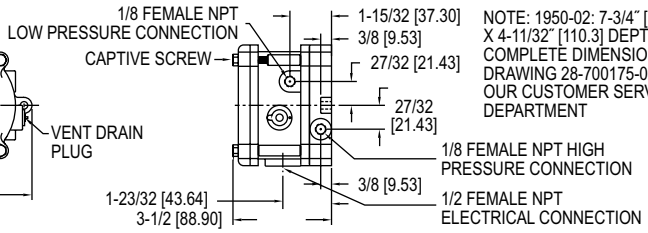

NOTE: 1950-02: 7-3/4″ [196.9] DIA. X 4-11/32″ [110.3] DEPTH. FOR COMPLETE DIMENSIONS REQUEST DRAWING 28-700175-00 FROM OUR CUSTOMER SERVICE DEPARTMENT

Series 1950 Explosion-Proof Differential Pressure Switch combines the best features of the popular Dwyer® Series 1900 Pressure Switch with an integral explosion-proof and weatherproof housing, making it an exceptional value for either application. It is CE, UL and CSA listed, FM approved for use in Class I, Div 1, Groups C and D, Class II Groups E, F, and G and Class III hazardous atmospheres NEMA 7 and 9. Rain tight NEMA 3 (IP54), weatherproof features include a drain plug and O-ring seal in cover. Electrical connections are easily made by removing front cover. For convenience the set point adjustment screw is located on the outside of the housing. Twelve models offer set points from .03 to 20 in w.c. (0.0075 to 5 kPa) and from .5 to 60 psi (0.035 to 3.5 bar). The unit is very light and compact - about half the weight and bulk of other explosion-proof or weatherproof switches with separate enclosures.
CAUTION: For use only with air or compatible gases. Applications with hazardous atmospheres and a single positive pressure may require special venting.

BENEFITS/FEATURES

- Explosion-proof and weatherproof housing provides device protection for outdoor use or harsh environment operation
- External set point screw provides easy access that simplifies making adjustments without opening or disassembling enclosure
- Easily accessible electrical connection simplifies the installation

SPECIFICATIONS

Service: Air and non-combustible, compatible gases.
Wetted Materials: Consult factory.
Temperature Limits: -40 to 140°F (-40 to 60°C); 0 to 140°F (-17.8 to 60°C) for 1950P-8, 15, 25, and 50. -30 to 130°F (-34.4 to 54.4°C) for 1950-02.
Pressure Limits: Continuous: 1950's - 45 in w.c. (0.11 bar); 1950P's - 35 psi (2.41 bar); 1950P-50 only - 70 psi (4.83 bar). Surge: 1950's - 10 psi (0.69 bar), 1950P's - 50 psi (3.45 bar), 1950P-50 only - 90 psi (6.21 bar).
Enclosure Rating: NEMA 3 (IP54), NEMA 7 and 9.
Switch Type: Single-pole double-throw (SPDT).
Electrical Rating: Mica silver (STD) and phenolic silver: 15A @ 125, 250, 480 VAC, 60Hz; Resistive 1/8 HP @ 125 VAC, 1/4 HP @ 250 VAC; Phenolic gold: 1A 125, VAC, 60Hz.
Electrical Connections: 3 screw type, common, normally open and normally closed.
Process Connections: 1/8″ female NPT.
Mounting Orientation: Diaphragm in vertical position. Consult factory for other position orientations.
Set Point Adjustment: Screw type on top of housing.
Weight: 3.25 lb (1.5 kg); 1950-02 model, 4.4 lb (2 kg).
Compliance: CE, CSA, FM, UL.

APPLICATIONS

- HVAC applications
- Process applications
- All-weather applications

MODEL CHART

Model	Range, psid	Approximate Deadband Min. Set Point	Approximate Deadband Max. Set Point	Model*	Range*	Approximate Deadband Min. Set Point	Approximate Deadband Max. Set Point	Model	Range, in w.c.	Approximate Deadband Min. Set Point	Approximate Deadband Max. Set Point
1950P-2-2F	0.5 to 2	0.3	0.3	**1950P-50-2F**	15 to 50	1.0	1.5	**1950-1-2F**	.4 to 1.6	.15	.20
1950P-8-2F	1.5 to 8	1.0	1.0	**1950-00-2F**	.07 to .15	.04	.05	**1950-5-2F**	1.4 to 5.5	.30	.40
1950P-15-2F	3 to 15	0.9	0.9	**1950-0-2F**	.15 to .50	.10	.15	**1950-10-2F**	3 to 11	.40	.50
1950P-25-2F	4 to 25	0.7	0.7					**1950-20-2F**	4 to 20	.40	.60

*P=PSID range models. Other ranges in w.c.

Caution: For use only with air or compatible gases. Applications with hazardous atmospheres and a single positive pressure may require special venting.

SERIES 1950G

EXPLOSION-PROOF DIFFERENTIAL PRESSURE SWITCH

Explosion-proof, Weatherproof, Compatible with Natural Gases

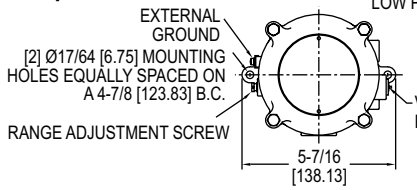

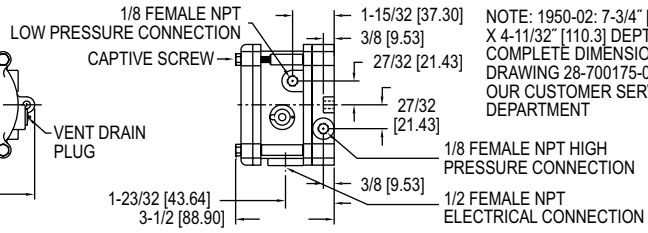

NOTE: 1950-02: 7-3/4″ [196.9] DIA. X 4-11/32″ [110.3] DEPTH. FOR COMPLETE DIMENSIONS REQUEST DRAWING 28-700175-00 FROM OUR CUSTOMER SERVICE DEPARTMENT

Series 1950G Explosion-Proof Differential Pressure Switch combines the best features of the popular Dwyer® Series 1950 Pressure Switch with the benefit of natural gas compatibility. Units are rain-tight for outdoor installations, and are UL listed for use in Class I, Groups A, B, C, and D; Class II, Groups E, F, and G and Class III atmospheres, Directive 2014/34/EU (ATEX) Compliant for CE 2813 Ex II 2G Ex db IIB+H2 T6, CSA and FM approved for Class I, Div. 1, Groups B, C, D; Class II, Div. 1, Groups E, F, G and Class III atmospheres. IECEx Ex db IIB+H2 T6 (-40°C<Ta<+60°C). The 1950G is very compact, about half the weight and bulk of equivalent conventional explosion-proof switches.
Easy access to the SPDT relay and power supply terminals is provided by removing the top plate of the aluminum housing. A supply voltage of 24 VDC, 120 or 240 VAC is required. A captive screw allows the cover to swing aside while remaining attached to the unit. Adjustment to the set point of the switch can be made without disassembly of the housing.

BENEFITS/FEATURES

- Compatible with natural gas making it suitable for use in those applications
- External set point screw provides easy access that simplifies making adjustments without opening or disassembling enclosure
- Easily accessible electrical connection simplifies the installation

APPLICATIONS

- Natural gas applications
- Process applications
- All-weather applications

SPECIFICATIONS

Service: Air and compatible combustible gases.
Wetted Materials: Contact factory.
Temperature Limits: 0 to 140°F (-17 to 60°C). **Note:** Set point drift may occur with ambient temperature changes.
Pressure Limits: 45 in w.c. (11.2 kPa) continuous; 10 psig (68.95 kPa) surge.
Enclosure Rating: NEMA 3 (IP54), NEMA 7 and 9.
Switch Type: 1 form C relay (SPDT).
Electrical Rating: 10 A, 120/240 VAC, 28 VDC. Resistive 50 mA, 125 VDC.
Power Requirements: 24 VDC ±10%. 120 or 240 VAC ±10% optional.
Electrical Connections: Internal terminal block.
Process Connections: 1/8″ female NPT.
Mounting Orientation: Diaphragm in vertical position. Consult factory for other position orientations.
Set Point Adjustment: Screw type on top of housing.
Weight: 2 lb 15.7 oz (1.35 kg).
Compliance: ATEX, CE, CSA, FM, IECEx, UL.

MODEL CHART

UL, CSA, FM Model	ATEX Model	Range in w.c.	Approximate Deadband Min. Set Point	Approximate Deadband Max. Set Point
1950G-00-B-24-NA	**1950G-00-B-24**	.07 to .15	.04	.06
1950G-0-B-24-NA	**1950G-0-B-24**	.15 to .50	.06	.11
1950G-1-B-24-NA	**1950G-1-B-24**	.4 to 1.6	.11	.29
1950G-5-B-24-NA	**1950G-5-B-24**	1.4 to 5.5	.4	.9
1950G-10-B-24-NA	**1950G-10-B-24**	3 to 11	.9	1.8
1950G-20-B-24-NA	**1950G-20-B-24**	4 to 20	1.2	3.0

240 VAC Models: 1950G-XX-B-240-NA; 120 VAC Models: 1950G-XX-B-120-NA

Dwyer
SERIES H3

EXPLOSION-PROOF DIFFERENTIAL PRESSURE SWITCH

Set points from 10 in w.c. to 200 psid, Rated 1500 psig, Weatherproof

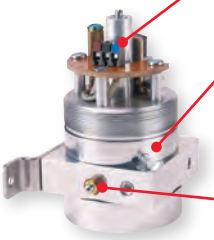

Shown without enclosure and cover

Internal terminal blocks for conductors up to 18 gage are optional

Optional NEMA 3 (IP54) enclosure includes explosion-proof drain; Standard NEMA 4X (IP56) version is without drain

External ground connection standard (internal ground connection also standard, use either one)

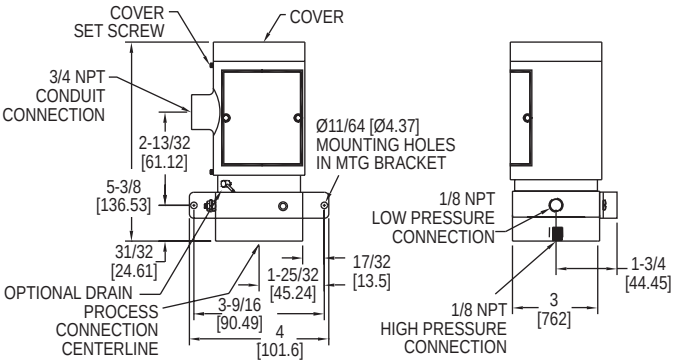

The **Series H3 Explosion-Proof Differential Pressure Switch** is a heavy duty, industrial unit with a unique new design which provides sensitivity to differential pressures as low as 10 inches of water (254 mm w.c.), yet handles total pressure of 1500 psi (103 bar). Unlike common differential pressure switches that use a piston-type motion transfer, the Series H3 utilizes a rotary motion transfer shaft that prevents a change in total pressure from causing a set point shift. Unit yields deadbands approximately 5% of range, with zero set point shift due to variation in working pressures. Friction is minimized and repeatability increased by allowing range spring to act directly on diaphragm plate. Rolling diaphragm design maintains constant effective area to further reduce friction. Diaphragm is allowed to "seat", allowing application of full rated pressure, up to 1500 psi (103 bar), on either high or low pressure port, without damage. Special over-travel feature prevents overtightening of range adjust screw. Choose optional 316 SS chamber for water and water-based fluids or harsher applications.

BENEFITS/FEATURES

- Rotary motion design prevents set point shifts
- Explosion-proof housing for use in applications where protection of process and personnel is needed
- Option for use with water and water-based solution makes this a versatile switch

APPLICATIONS

- Water flow proving with an orifice plate
- Differential pressure across chiller
- Liquid filter status

SPECIFICATIONS

Wetted Materials: See pressure chamber and diaphragm material in model chart.
Temperature Limit: -4 to 220°F (-20 to 104°C), ATEX: -20 to 90°C (-4 to 194°F).
Pressure Limit: 1500 psig (103 bar).
Enclosure Rating: Standard meets NEMA 4X (IP56), drain option meets NEMA 3 (IP54). For hazardous use see the hazardous location ratings chart.
Switch Type: SPDT or DPDT snap switch.
Electrical Rating: 5 A @ 125/250 VAC, 30 VDC.
Electrical Connections: See model chart.
Conduit Connection: 3/4″ female NPT.
Process Connection: 1/8″ female NPT.
Mounting Orientation: Vertical.
Set Point Adjustment: Internal screw.
Weight: 4 lb 2 oz (2 kg).
Deadband: Approximately 5% of range.
Agency Approvals: ATEX, CE, CSA, UL see ratings chart.

MODEL CHART

Example	H3	S	-2	S	C	-MV	H3S-2SC-MV
Series	H3						Explosion-proof differential pressure switch
Pressure Chamber and Diaphragm Material (Wetted)		A S					Aluminum chamber with nitrile diaphragm 316 SS chamber with fluoroelastomer diaphragm
Adjustable Operating Range			1 2 3 4				10-180 in. w.c. (2.48-44.78 kPa) 0.5-15 psid (0.03-1 bar) 5-70 psid (.34-4.8 bar) 10-200 psid (.7-13.8 bar)
Circuit (Switch) Options				S D			SPDT snap action switch rated 5 A @ 125/250 VAC, 30 VDC DPDT snap action switch rated 5 A @ 125/250 VAC, 30 VDC
Electrical Connection					L T C		18 AWG x 18 inch lead wires UL, CSA approved internal terminal block ATEX approved internal terminal block
Options						Drain MV VIT	Enclosure with drain - allows condensate to be drained from inside (meets NEMA 3 instead of 4X) Gold contacts on snap switch for dry circuits rated 1 A @ 125 VAC, 1A resistive or 0.5 A inductive @ 30 VDC Fluoroelastomer diaphragm option where not standard

ACCESSORIES

Model	Description
A-610	Pipe mounting kit for 1-1/4 to 2″ pipe

HAZARDOUS LOCATION RATINGS

Model	UL	CSA	Directive 2014/34/EU ATEX Compliant
H3 _ – _ _ C	-	-	CE 2813 Ex II 2 G Ex d IIC T5 or T6 EC-Type Certificate No. KEMA 03ATEX 2584
H3 _ – _ _ L	Cl. I, Gr.B, C and D Cl. II, Gr.E, F and G	Cl. I, Gr.B, C and D Cl. II, Gr.E, F and G	-
H3 _ – _ _ T	Cl. I, Gr.B, C and D Cl. II, Gr.E, F and G	Cl. I, Gr.B, C and D Cl. II, Gr.E, F and G	-
H3 _ – _ _ C-DRAIN	-	-	CE 2813 Ex II 2 G Ex d IIC T5 or T6 EC-Type Certificate No. KEMA 03ATEX 2584
H3 _ – _ _ L-DRAIN	Cl. I, Gr.B, C and D Cl. II, Gr.E, F and G	-	-

Dwyer

SERIES DX

WET/WET DIFFERENTIAL PRESSURE SWITCH

NEMA 4X Enclosure, Low Differential Set Points

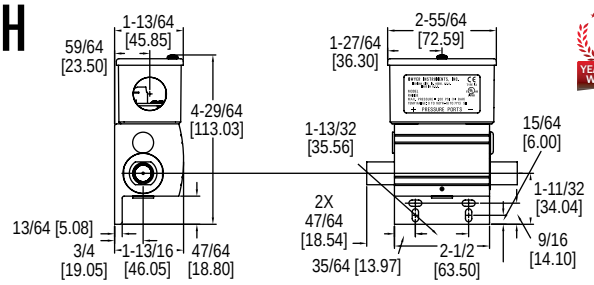

The **Series DX Wet/Wet Differential Pressure Switch** makes a contact output based on the differential between two pressure sources. Wetted materials of brass and fluoroelastomer are suitable for use with most gases and water based solutions. The switch can be used for low differential pressure indication with set point on a decrease of pressure as low as 1 psid (0.07 bar). Differential set point ranges are available from 2.5 to 75 psid (0.17 to 5.17 bar) on increasing differential pressure and 1.0 to 67 psid (0.07 to 4.62 bar) on decreasing differential pressure. Unit features a high static pressure rating of 200 psig (13.8 bar). Weatherproof, UL type 4X, enclosure for dust laden, outdoor, or wash-down installation environments. Externally adjustable set point, integral mounting flange and a removable electrical terminal block for quick and easy installation.

BENEFITS/FEATURES

- Differential pressure switch that is suitable for most gas and water-based applications allows multiple uses in the most sophisticated designs
- Weatherproof housing provides protection in the harsh, wet or dirty environments ensuring switch's long-service life
- Removable terminal block reduces installation time

APPLICATIONS

- Indicating filter condition
- Proof of flow indicator monitoring
- Proving flow through a pump
- Proving flow through a chiller
- Proving flow through a heat pump or AC unit

OPTIONS	
To order add suffix:	**Description**
-PRESET	Preset unit
Example: DXW-11-153-1-PRESET	

USA: California Proposition 65
WARNING: This product can expose you to chemicals including Lead, which is known to the State of California to cause cancer and birth defects or other reproductive harm. For more information go to www.P65Warnings.ca.gov.

SPECIFICATIONS

Service: Compatible gases and liquids.
Wetted Materials: Connection: Brass; Diaphragm: Fluoroelastomer.
Temperature Limits: 30 to 140°F (-1 to 60°C).
Pressure Limits: 200 psig (13.8 bar). Continuous single side only pressure should not exceed 1.25 x full differential range.
Enclosure Rating: Weatherproof UL type 4X (IP65).
Repeatability: ±2% of full range.
Switch Type: SPDT snap switch.
Electrical Rating: 5 A @ 125/250 VAC (~), 5 A res. @ 30 VDC (⎓).
Electrical Connection: Removable terminal block.
Conduit Connection: 0.871″ diameter hole for 1/2″ conduit fitting.
Process Connection: 1/4″ NPT female.
Mounting Orientation: Ports on horizontal plane, ±10°.
Set Point Adjustment: External screw.
Housing Materials: Body: Aluminum; Housing: Polycarbonate; Cover: 300 SS.
Vibration and Shock: Set point repeats after 2.5 Gs, 5 to 500 Hz. Set point repeats after a 15 Gs, 10 millisecond duration.
Humidity Limit: 80% (non-condensing).
Pollution Degree: 2.
Environment: Intended for indoor and outdoor use.
Weight: 1 lb 3 oz (0.54 kg).
Compliance: CE, cULus.

MODEL CHART

Model	Adjustable Differential Range (on increase) [psid (bar)]	Fixed Deadband [psid (bar)] Low Set Point	Fixed Deadband [psid (bar)] High Set Point
DXW-11-153-1	2.5 to 10 (0.17 to 0.69)	1.5 (0.10)	2.5 (0.17)
DXW-11-153-2	10 to 25 (0.69 to 1.72)	2.5 (0.17)	3.5 (0.24)
DXW-11-153-3	25 to 50 (1.72 to 3.45)	3.5 (0.24)	6.0 (0.41)
DXW-11-153-4	50 to 75 (3.46 to 5.17)	6.0 (0.41)	8.0 (0.55)

Note: Set points on decrease will be the range minus the deadband.

SERIES DP

DOUBLE BELLOWS DIFFERENTIAL PRESSURE SWITCH

Visible Set Points, Adjustable or Fixed Deadband, High Pressure Ranges

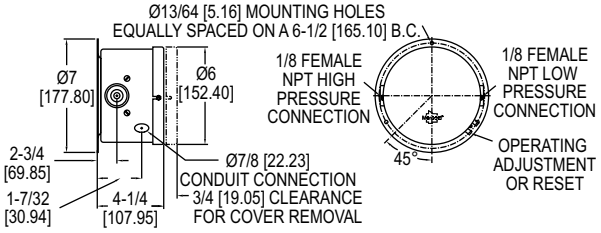

Two opposing bellows combine maximum sensitivity and vibration resistance at a moderate cost in the **Series DP Double Bellows Differential Pressure Switch**. Both set and reset points are easily adjustable through non-interactive, externally accessible controls. Visible set point indicators simplify changes. SPDT snap action switch, 316 stainless steel or brass bellows, flanged steel housing. Rated pressures to 600 psig.

BENEFITS/FEATURES

- Bellows switch design provides sensitivity to pressure changes but resists vibration preventing out of range switching
- External access to set and rest controls makes for easy adjustments
- Visible set point indicators simplify changes

APPLICATIONS

- Accurate switch triggers in high pressure applications

SPECIFICATIONS

Wetted Materials: Brass on ranges 61, 62, 63 or 316 SS on ranges 62E, 64E, 65E.
Temperature Limits: -10 to 180°F (-23 to 82°C).
Pressure Limit: Maximum pressure of the operating range.
Enclosure Rating: General purpose. Weatherproof or explosion-proof optional.
Switch Type: Snap switch. (Contact factory for mercury switch).
Electrical Rating: See model chart.
Electrical Connection: Screw terminal.
Conduit Connection: General purpose: 1/2″ hole for conduit hub; Weatherproof: 1/2″ conduit hub; Explosion-proof: 3/4″ female NPT.
Process Connection: General purpose and weatherproof: 1/8″ female NPT, explosion-proof: 1/4″ male NPT.
Mounting Orientation: Vertical.
Set Point Adjustment: Thumbscrew.
Weight: General purpose: 5 lb (2.3 kg), weatherproof: 7 lb (3 kg), explosion-proof: 25 lb (11 kg).
Deadband: See model chart.
Compliance: CE, cULus.

MODEL CHART

Bellows Material	Range, psid (bar)	Max. Press, psig (bar)	Adjustable Deadband: Snap Action Switch SPDT, 15A @ 120/240 VAC: Min. D.B. psid (bar)	Adjustable Deadband: Model	Fixed Deadband: Snap Action Switch SPDT, 15A @ 120/240 VAC: Fixed D.B. psid (bar)	Fixed Deadband: Model
Brass	0-10 (0-0.7)	50 (3.5)	1.5 (.10)	**DPA-7033-153-61**	0.5 (.03)	**DPS-7233-153-61**
Brass	0-20 (0-1.4)	100 (6.9)	2.5 (.17)	**DPA-7033-153-62**	1.0 (.07)	**DPS-7233-153-62**
Brass	0-30 (0-2.1)	300 (20.7)	6.0 (.41)	**DPA-7033-153-64**	1.5 (.10)	**DPS-7233-153-64**
316 SS	0-20 (0-1.4)	100 (6.9)	3.0 (.21)	**DPA-7043-153-62E**	1.5 (.10)	**DPS-7243-153-62E**
316 SS	0-30 (0-2.1)	300 (20.7)	6.0 (.41)	**DPA-7043-153-64E**	2.0 (.14)	**DPS-7243-153-64E**

OPTIONS	
To order add suffix:	**Description**
E	Explosion-proof enclosure
W	Weatherproof enclosure
Example: DPAW-7033-153-61	

USA: California Proposition 65
WARNING: This product can expose you to chemicals including Lead, which is known to the State of California to cause cancer and birth defects or other reproductive harm. For more information go to www.P65Warnings.ca.gov.

Dwyer

SERIES 616KD

DIFFERENTIAL PRESSURE TRANSMITTERS ±0.25, ±1, OR ±2% ACCURACY

One-Touch® Digital Push-Button Calibration Technology

5 YEAR LIMITED WARRANTY

CALIBRATION SERVICES AVAILABLE

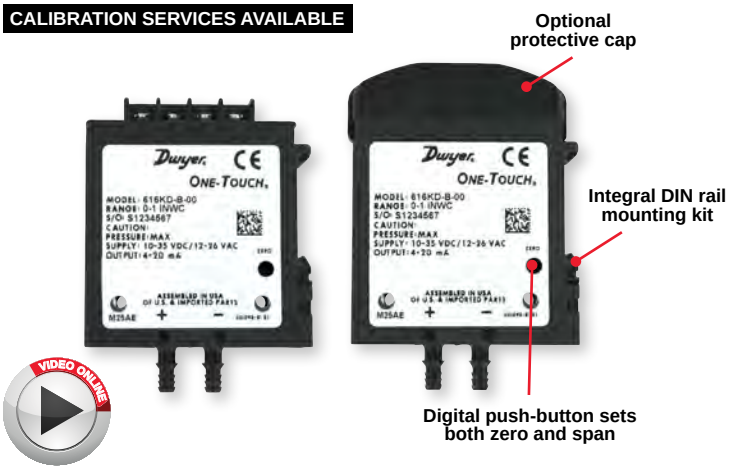

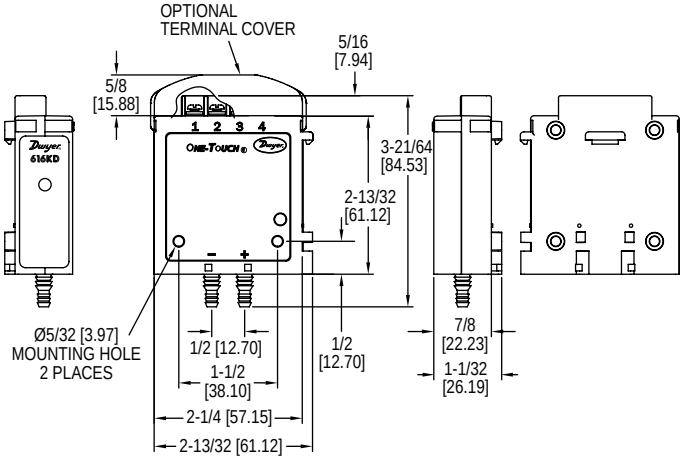

The **Series 616KD Differential Pressure Transmitters ±0.25, ±1, or ±2% Accuracy** with One-Touch® digital push-button calibration technology are designed for simplicity, making them the ideal choice for installers and maintenance professionals. These instruments not only alleviate cumbersome turn pots typically found in most transmitters, but eliminate entirely the need to span the instruments during calibration. With a single digital push-button, both ZERO AND SPAN are calibrated properly, nothing else is required. No additional reference pressure sources or separate calibration devices are necessary.

BENEFITS/FEATURES

- Simple calibration push-button sets back zero and span, saving time installing and over the service life
- Cost effective and compact device suitable for OEM applications where space, simplicity, and value are key
- Ranges and accuracy selection cover a wide range of applications minimizing components and determining standardizing on design
- Optional 1/8″ NPT process connection allows for use with metal barbed fittings or compression fittings for use with metal tubing
- Side mounted push button zero (-A and -B models only)

APPLICATIONS

- Air handlers
- Variable air volume
- Duct pressure
- Filter monitoring

SPECIFICATIONS

Service: Air and non-combustible, compatible gases.
Wetted Materials: Consult factory.
Accuracy: 616KD-A: ±0.25% FS; 616KD-B: ±1% FS, 616KD: ±2% FS.
Stability: ±1% FS/year.
Temperature Limits: 0 to 140°F (-17.8 to 60°C).
Compensated Temperature Range: 20 to 122°F (-6.67 to 50°C).
Pressure Limits: 2 psig (ranges 5 in w.c. or lower); 5 psig (ranges 10 to 40 in w.c.).
Thermal Effect: 616KD-A: ±0.02% FS/°F; 616KD-B: ±0.04% FS/°F; 616KD: ±0.06% FS/°F, includes zero and span.
Power Requirements: 4-20 mA output: 10-35 VDC (2-wire) or 12-26 VAC (4-wire); 5 V output: 10-35 VDC (3-wire) or 12-26 VAC (4-wire); 10 V output: 13-35 VDC (3-wire) or 12-26 VAC (4-wire) for 616KD A and B. 16-36 VDC (2-wire or 3-wire): 20-28 VAC (3-wire) for 616KD.
Output Signal: 4-20 mA or option with field selectable 0-10, 0-5, 2-10, 1-5 V.
Zero and Span Adjustments: Push button.
Loop Resistance: 4-20 mA output (DC): 0 to 1250 Ω max. Rmax = 50 (VpsDC -10) Ω; 4-20 mA output (AC): 0 to 1200 Ω max. Rmax = 50 (1.4 VpsAC -12) Ω; Voltage output: 5 kΩ minimum.
Current Consumption: 24 mA max for 616KD A and B. 21 mA max for 616KD.
Electrical Connections: Screw-type terminal block.
Process Connections: Barbed, dual size to fit 1/8″ and 3/16″ (3 mm and 5 mm) ID rubber or vinyl tubing.
Enclosure Rating: NEMA 1 (IP20), tested to UL 2043 for plenum applications.
Mounting Orientation: Vertical with pressure connections pointing down.
Weight: 1.8 oz (51 g).
Compliance: CE.

MODEL CHART

Example	616KD	-A	-12	-AT	616KD-A-12-AT
Series	616KD				Differential pressure transmitter
Accuracy		A B			0.25% FS accuracy 1.0% FS accuracy 2.0% FS accuracy
Range			00 01 02 03 04 05 06 07 08 10 11 12 13 14 15 50 51 57 52 53 54 55 56 58		0 to 1 in w.c. 0 to 2 in w.c 0 to 3 in w.c. 0 to 5 in w.c. 0 to 10 in w.c. 0 to 15 in w.c. 0 to 20 in w.c. 0 to 25 in w.c. 0 to 40 in w.c. 0 to 250 Pa 0 to 500 Pa 0 to 750 Pa 0 to 1250 Pa 0 to 2500 Pa 0 to 5000 Pa 0 to ±1 in w.c. 0 to ±2 in w.c. 0 to ±3 in w.c. 0 to ±5 in w.c. 0 to ±10 in w.c. 0 to ±250 Pa 0 to ±500 Pa 0 to ±750 Pa 0 to ±1250 Pa
Options				AT FC N NIST TC V	Aluminum tag Factory calibration 1/8″ female NPT NIST certification Terminal cover Voltage output 0-5, 1-5, 0-10, 2-10 VDC (field selectable)

Note: 0.25% FS accuracy is not available in the following ranges 00, 01, 10, 11, 50, 51, 54, 55.

ACCESSORIES

Model	Description
A-360	Aluminum DIN rail 1 m
A-618	Protective terminal cap

Optional NPT connection block

Side mount zero

DIFFERENTIAL PRESSURE TRANSMITTERS - LOW RANGES

High Accuracy, Ranges Down to 0.1 in w.c. (25 Pa)

CALIBRATION SERVICES AVAILABLE

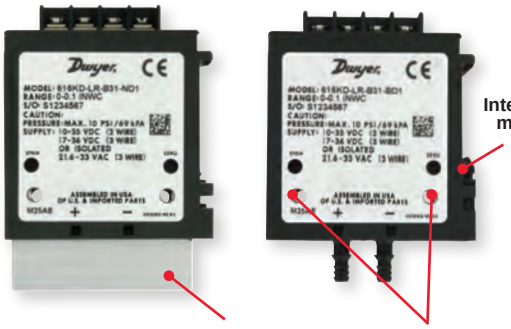

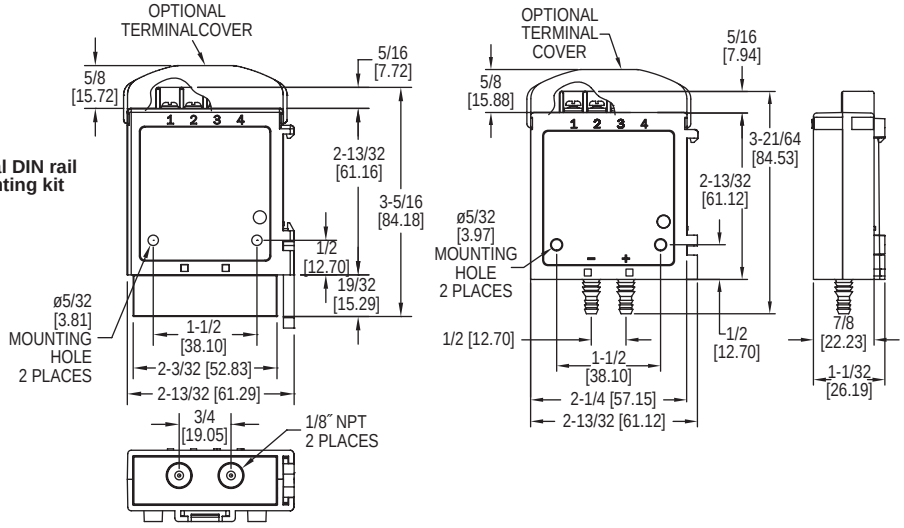

The **Series 616KD-LR Differential Pressure Transmitters - Low Ranges** are designed for simplicity, making it the ideal choice for installers and maintenance professionals. These low range instruments not only alleviate cumbersome turn pots typically found in most transmitters, but eliminate entirely the need to span the instruments during calibration. With single digital push-button, both ZERO AND SPAN are calibrated properly, nothing else is required. No additional reference pressure sources or separate calibration devices are necessary.

BENEFITS/FEATURES

- Wide selection of low ranges and accuracy cover numerous applications minimizing components and standardizing on design
- Simple calibration push-buttons to set zero and span, saving time installing and maintaining over the service life
- Cost effective and compact device suitable for OEM applications where space, simplicity, and value are key
- Simultaneous current and voltage outputs
- Optional 1/8″ NPT process connection allows for use with metal barbed fittings or compression fittings for use with metal tubing
- Plenum rated units meeting UL Standard 2043

APPLICATIONS

- Air handlers
- Variable air volume
- Duct pressure
- Filter monitoring

SPECIFICATIONS

Service: Air and non-combustible, compatible gases.
Wetted Materials: Consult factory.
Accuracy: ±0.25% FS for ±0.4″ (100 Pa) and ±0.5″ (125 Pa), ±0.5% FS for ±0.25″ (60 Pa), and ±1% FS for ±0.1″ (25 Pa).
Stability: ±1% / year FSO.
Temperature Limits: 0 to 140°F (-17.8 to 60°C).
Pressure Limits: 1 psi max., operation; 10 psi burst.
Power Requirements: 10-35 VDC (2-wire), 17-36 VDC or isolated 21.6-33 VAC (3-wire).
Output Signal: 4-20 mA (2-wire), 0-5 VDC, 0-10 VDC (3-wire).
Response Time: 2.5 Hz sample rate.
Zero and Span Adjustments: Push buttons.
Loop Resistance: Current Output: 0 to 1250Ω max; Voltage Output: Min. load resistance 1kΩ.
Current Consumption: 40 mA max.
Electrical Connections: Screw-type terminal block.
Process Connections: Barbed, dual size to fit 1/8″ and 3/16″ (3 mm and 5 mm) ID rubber or vinyl tubing, or 1/8″ NPT.
Enclosure Rating: NEMA1 (IP20).
Mounting Orientation: Vertical with pressure connections pointing down.
Weight: 1.8 oz (51 g).
Agency Approvals: CE, optional plenum rated units meet UL Standard 2043.

MODEL CHART

Example	616KD-LR	-A	34	-B	D1	-FC	616KD-LR-A34-BD1-FC
Series	616KD-LR						Differential pressure transmitter
Accuracy		A B D					0.25% FS accuracy 1.0% FS accuracy 0.5% FS accuracy
Range			31 32 34 35 41 42 44 45 61 62 64 65 71 72 74 75				0 to 0.1 in w.c.① 0 to 0.25 in w.c.② 0 to 0.4 in w.c. 0 to 0.5 in w.c. 0 to ±0.1 in w.c.① 0 to ±0.25 in w.c.② 0 to ±0.4 in w.c. 0 to ±0.5 in w.c. 25 Pa① 60 Pa② 100 Pa 125 Pa 0 to ±25 Pa① 0 to ±60 Pa② 0 to ±100 Pa 0 to ±125 Pa
Process Connection				B N			Plastic barb 1/8″ female NPT with front push-button
Output					D1 D2 D3 D4		4-20 mA and 0-10 V 4-20 mA and 0-5 V 4-20 mA and 2-10 V 4-20 mA and 1-5 V
Options						AT COC FC NIST PR TC	Aluminum tag Certificate of Conformance Factory calibration certificate NIST traceable calibration certificate Plenum rated Terminal cover

①B accuracy only. ②B and D accuracies only.

ACCESSORIES

Model	Description
A-360	Aluminum DIN rail 1 m
A-618	Protective terminal cap

A-618 installed on unit

Dwyer

SERIES 616W

DIFFERENTIAL PRESSURE TRANSMITTER

NEMA 4X Enclosure, 0.25% Full-Scale Accuracy

CALIBRATION SERVICES AVAILABLE

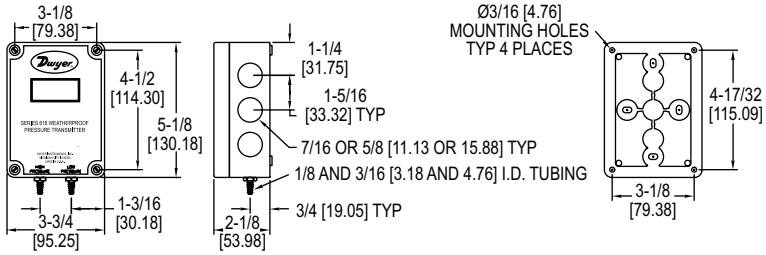

Positive, negative and differential pressures can be measured within a full span accuracy of ±0.25 with the **Series 616W Differential Pressure Transmitter**. Units are enclosed in a polycarbonate case, rated NEMA 4X (IP66) and operate by sensing the pressure of air and compatible gases then sending a standard 4-20 mA output signal. Design enables operation in 2-wire current loops. A wide range of models are available factory calibrated to specific ranges. The span and zero controls are for use when checking calibration. They are not intended for re-ranging to a significantly different span. The LCD display allows local indication of pressure.

BENEFITS/FEATURES

- NEMA 4X rated enclosure provides protection in harsh environments permitting outdoor monitoring or in areas where dust and particulate matter exists
- Easy to read LCD display provides immediate local alerts allowing corrective action to be taken quicker to eliminate the problem from becoming widespread
- Zero and span controls provides easy calibration checks and shorter installation time to get device running and monitoring

APPLICATIONS

- Dust collection
- Outdoor HVAC
- Roof-top equipment

SPECIFICATIONS

Service: Air and non-combustible, compatible gases.
Wetted Materials: Consult factory.
Accuracy: ±0.25% FS @ 77°F (25°C), display accuracy ±0.5%.
Stability: ±1% FS/yr.
Temperature Limits: -4 to 158°F (-20 to 70°C).
Pressure Limits: See chart.
Power Requirements: 10-36 VDC (2-wire), 17-36 VDC, or isolated 21.6-33 VAC (3-wire).
Output Signal: 4-20 mA (2-wire), 0-5 VDC, or 0-10 VDC (3-wire).
Zero and Span Adjustments: Push-buttons.
Loop Resistance: Current output: 0 to 1250 Ω max; Voltage output: Load resistance 1 kΩ (min).
Current Consumption: 21 mA max. continuous.
Electrical Connections: 4-wire removable European style terminal block for 16 to 26 AWG.
Process Connections: Barbed, dual size to fit 1/8″ and 3/16″ (3.12 and 4.76 mm) ID rubber or vinyl tubing.
Enclosure Rating: NEMA 4X (IP66).
Mounting Orientation: Any orientation.
Weight: Without LCD: 8.9 oz (253 g); With LCD: 9.5 oz (269 g).
Compliance: CE.

MODEL CHART

Model	Range	Max. Pressure	Model	Range	Max. Pressure
616W-2-LCD	0 to 6 in w.c.	4.5 psig	**616W-6-LCD**	0 to 100 in w.c.	25 psig
616W-3-LCD	0 to 10 in w.c.	4.5 psig	**616W-20B-LCD**	0 to ±10 in w.c.	4.5 psig
616W-4-LCD	0 to 20 in w.c.	6 psig	**616W-3M-LCD**	0 to 2.5 kPa	31.0 kPa
616W-5-LCD	0 to 40 in w.c.	25 psig			

Note: Units with "M" in the model number are metric units.

OPTIONS

To order add suffix:	Description
-NIST	NIST traceable calibration certificate

Example: 616W-3-LCD-NIST

Process Tubing Options: See page 453 (Gage Tubing Accessories)

SERIES 616WL

DIFFERENTIAL PRESSURE TRANSMITTER

Low Ranges Down to 0.25 in w.c. (60 Pa), NEMA 4X Housing (IP66)

CALIBRATION SERVICES AVAILABLE

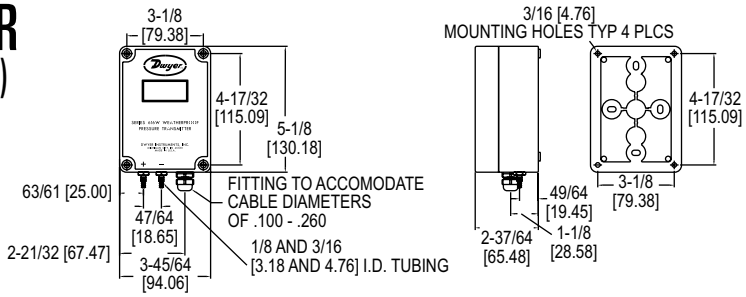

The **Series 616WL Differential Pressure Transmitter** senses very low pressures of air and non-combustible, compatible gases and sends a standard 4-20 mA output signal. All models, including those featuring the 3 digit LCD digital read-out, are factory calibrated to specific ranges as listed in the chart below. Positive, negative and differential pressures can be measured within a full span accuracy of ±0.50%. This weatherproof unit is enclosed in a polycarbonate case, designed to meet (IP66/NEMA 4X). Internal digital push-button zero and span allow for quick and simple field calibration.

BENEFITS/FEATURES

- NEMA 4X rated enclosure provides protection in harsh environments permitting outdoor monitoring or in areas where dust and particulate matter exists
- Easy to read LCD display provides immediate local alerts allowing corrective action to be taken quicker to eliminate the problem from becoming widespread
- Zero and span controls provides easy calibration checks and shorter installation time to get device running and monitoring
- High precision accuracy at low pressure ranges provides exceptional accuracy for insuring tight-control and minimizing costly out of specification conditions

APPLICATIONS

- Low pressure applications
- Dust collection
- Outdoor HVAC
- Roof-top equipment

SPECIFICATIONS

Service: Air and non-combustible, compatible gases.
Wetted Materials: Consult factory.
Accuracy: ±0.50% FS, display accuracy ±0.5%.
Stability: ±1% FS/yr.
Temperature Limits: 0 to 140°F (-17.8 to 60°C).
Compensated Temperature Limits: 20 to 120°F (-6.67 to 48.9°C).
Pressure Limits: See chart.
Thermal Effect: ±0.02% FS/°F (0.036% FS/°C).
Power Requirements: 12-30 VDC (2-wire).
Output Signal: 4-20 mA.
Zero and Span Adjustments: Digital, push-button adj.
Loop Resistance: DC; 0 to 900 Ω max.
Current Consumption: DC; 38 mA max.
Electrical Connections: Screw-type terminal block.
Process Connections: Barbed, dual size to fit 1/8″ and 3/16″ (3.12 and 4.76 mm) ID rubber or vinyl tubing.
Enclosure Rating: NEMA 4X (IP66).
Mounting Orientation: Vertical, consult factory for other position orientations.
Weight: Without LCD 17 oz (482 g); with LCD 18 oz (510 g).
Compliance: CE.

MODEL CHART

Model	Range	Max. Pressure
616WL-2-LCD	0 to 0.25 in w.c.	2 psig
616WL-4-LCD	0 to 1 in w.c.	4 psig
616WL-12-LCD	0 to ±0.25 in w.c.	2 psig
616WL-14-LCD	0 to ±1 in w.c.	4 psig
616WL-22-LCD	0 to 60 Pa	2 psig
616WL-32-LCD	0 to ±60 Pa	2 psig
616WL-25-LCD	0 to 250 Pa	4 psig
616WL-35-LCD	0 to ±250 Pa	4 psig

OPTIONS

To order add suffix:	Description
-NIST	NIST traceable calibration certificate

Example: 616WL-4-LCD-NIST

Process Tubing Options: See page 453 (Gage Tubing Accessories)

Dwyer

SERIES 616D

DIN RAIL DIFFERENTIAL PRESSURE TRANSMITTER

Mounts on 35 mm DIN Rail, ±0.25% Full-Scale Accuracy

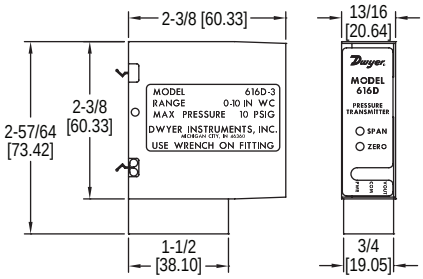

The **Series 616D Din Rail Differential Pressure Transmitter** senses the pressure of air and compatible gases and sends a standard 4-20 mA or 0-10 VDC output signal. The 616D enclosure is specifically designed to mount on a 35 mm DIN rail in a panel. This mounting style allows for several units to be mounted closely together reducing required space. The span and zero controls are for use when checking calibration. They are not intended for re-ranging. Versatile circuit design enables operation in 2-wire current loops.

BENEFITS/FEATURES

- Simple calibration push-buttons to set zero and span
- Cost effective and compact device suitable for OEM applications where space, simplicity, and value are key

APPLICATIONS

- Air handlers
- Variable air volume
- Duct pressure
- Filter monitoring

MODEL CHART

Model	Range	Max. Pressure
616D-2	0 to 6 in w.c.	10 psig
616D-3	0 to 10 in w.c.	10 psig
616D-4	0 to 20 in w.c.	20 psig
616D-5	0 to 40 in w.c.	20 psig
616D-6	0 to 100 in w.c.	15 psig
616D-7	0 to 200 in w.c.	45 psig
616D-8	0 to 10 psid	45 psig

SPECIFICATIONS

Service: Air and non-combustible, compatible gases.
Wetted Materials: Consult factory.
Accuracy: ±0.25% FS @ 77°F (25°C).
Thermal Effect: ±0.02 FS/°F (±0.036% FS/°C).
Stability: ±1% FS/yr.
Temperature Limits: 14 to 185°F (-10 to 85°C).
Pressure Limits: See chart.
Power Requirements: 10-35 VDC (2-wire); 17-36 VDC, or isolated 21.6-33 VAC (3-wire).
Output Signal: 4-20 mA (2-wire); 0-10 VDC (3-wire).
Zero and Span Adjustments: Push-buttons.
Loop Resistance: Current output: 0 to 1250 Ω max; Voltage output: Load resistance 1 kΩ min.
Current Consumption: 40 mA max.
Electrical Connections: Screw-type terminal block.
Process Connections: 1/8″ female NPT. Accessories included are 2 barbed fittings for 1/8″ (3.12 mm) and 3/16″ (4.77 mm) ID rubber or vinyl tubing.
Mounting Orientation: Vertical, on a 1.378″ (35 mm) DIN rail.
Weight: 4.8 oz (136 g).
Agency Approvals: CE.

ACCESSORIES

Model	Description
A-360	Aluminum DIN Rail 1 m

SERIES RSM

ROOM STATUS MONITOR

For Sensing Low Pressure Using High Accuracy

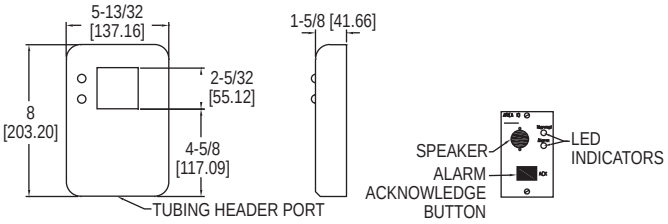

Room status monitor **Remote annunciator**

Series RSM Room Status Monitor is designed for critical low differential pressure applications that require stringent pressure monitoring and alarming. The Series RSM can be configured to monitor positive or negative pressure in protected environments and hospital isolation rooms per CDC guidelines. The RSM is a complete system with a graphic user interface which enables access to pressure, security, calibration, and alarm setup. The RSM has a NEMA 1 (IP20) rated fire retardant plastic for indoor applications.

BENEFITS/FEATURES

- Accurately monitors protective environments for negative or positive pressure ensuring safety and reducing risk of catastrophic events
- Audible and visual alarm provides immediate local alerts allowing corrective action to be taken quicker to eliminate the problem from becoming widespread
- Password protected set up menu ensures no errors by untrained personnel
- Optional BACnet communication from devices provides integration into building control system for automated control and centralized monitoring and alarming

APPLICATIONS

- Hospital isolation wards
- Clean rooms
- Pharmaceutical
- Manufacturing
- Research labs
- Animal facilities

MODEL CHART

Model*	Operating Range	Model**	Operating Range
RSM-1-A	±0.05 in w.c.	**RSM-1-B**	±0.05 in w.c.
RSM-2-A	±0.1 in w.c.	**RSM-2-B**	±0.1 in w.c.
RSM-3-A	±0.25 in w.c.	**RSM-3-B**	±0.25 in w.c.
RSM-4-A	±0.5 in w.c.	**RSM-4-B**	±0.5 in w.c.
RSM-5-A	±1 in w.c.	**RSM-5-B**	±1 in w.c.
RSM-6-A	±2.5 in w.c.	**RSM-6-B**	±2.5 in w.c.

***Excitation/Output: 24 VAC/4-20 mA or 0-5 or 0-10 VDC.
**Excitation/Output: 120 VAC/4-20 mA or 0-5 or 0-10 VDC.

Note: For optional BACnet communication change end from -A to -C for 24 VAC power or from -B to -D for 120 VAC power models.

SPECIFICATIONS

Service: Air or non-conductive, nonexplosive gases.
Accuracy: ±0.5% FS.
Temperature Limits: 32 to 120°F (0 to 50°C).
Humidity Limits: 5 to 95% relative humidity (non-condensing).
Thermal Effects: ±0.03% FS/°F (± 0.05% FS/°C).
Pressure Limits: ±15 in w.c. (±3.7 kPa).
Supply Voltage: Order code A (24 VAC): 18-32 VAC, 50 to 60 Hz; Order code B (120 VAC): 85-265 VAC, 50 to 60 Hz; Main supply voltage fluctuations up to 10%.
Power Requirements: 5 W.
Power Consumption (Voltage Output): 5 W.
Output Signal: Selectable 4-20 mA (2-wire), 0-5 VDC (3-wire), or 0-10 VDC (3-wire).
Switch Type: SPST.
Loop Resistance (4-20 mA Output): 0 to 510 Ω.
Electrical Connection: Removable terminal block.
Process Connections: Barbed fittings for 3/16″ ID tubing.
Enclosure Rating: NEMA 1 (IP20) rated for indoor applications.
Housing: Fire retardant plastic.
Mounting: Mount to standard double gang metal electrical box using 4x4″ plaster ring adaptor.
Dimensions: 8″ H x 5.4″ W x 1.8″ D (20.3 H x 13.7 W x 4.1 D cm).
Weight: 1.5 lb (680 g).
Communications: BACnet MSTP ASC optional.
Agency Approvals: CE, CSA (RSM only).

ACCESSORIES

Model	Excitation/Output
A-285	Remote alarm annunciator with visible/audible alarm and acknowledge switch

Process Tubing Options: See page 453 (Gage Tubing Accessories)

Dwyer
SERIES RSMC

STABILI*SENSE*™ CRITICAL ROOM STATUS MONITOR

Touchscreen LCD, Monitors Multiple Parameters

CALIBRATION SERVICES AVAILABLE

RSMC with standard plastic bezel

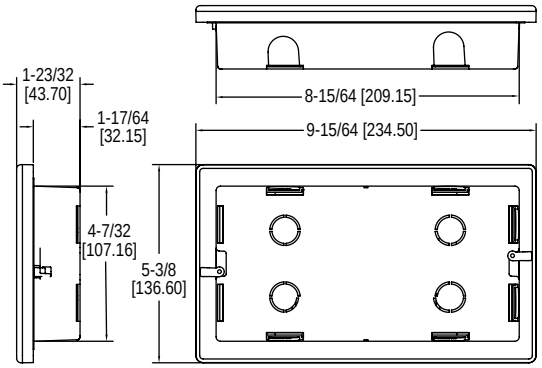

The **Series RSMC Stabili*SENSE*™ Critical Room Status Monitor** is designed for critical low differential pressure applications that require stringent pressure monitoring and alarming. It can be configured to monitor positive or negative pressure in clean rooms, hospital isolation rooms, school nurses offices, laboratories, and vivariums. The RSMC is a complete system with a touchscreen graphical user interface which enables access to pressure, humidity, temperature, air change, security, door status, calibration, and alarm setup. The graphical display color changes allow a clear determination of when the parameters are operating within the acceptable range (green), caution range (yellow), or have gone outside the acceptable operating range (red). The RSMC Stabili*SENSE*™ critical room status monitor comes standard with BACnet MS/TP and Modbus® RTU communications.

BENEFITS/FEATURES

- Long-term stable pressure measurements
- User-configurable graphical interface
- Monitors up to 3 rooms with a single unit
- Displays up to 4 parameters including pressure, relative humidity, temperature, air change, and/or door status
- Allows for flush installation in walls with space constraints with the shallow mounting depth of 1.1″ (27.5 mm)
- Full color 4.3″ touchscreen LCD incorporates color status indication: green for good, yellow for warning, and red for alarm
- Easy-to-clean optional brushed stainless steel bezel
- BACnet MS/TP and Modbus® RTU communications
- Includes RSMC, junction box, factory calibration certificate, and USB-C/USB-A flash-drive

APPLICATIONS

- Hospital isolation rooms
- Pharmaceutical facilities
- Dental offices
- School nurse offices
- Semiconductor manufacturing facilities

SPECIFICATIONS

Service: Air.
Measurement Technology: Capacitance cell pressure sensor.
Wetted Materials: Front: PMMA window with IP65 rating; Back housing: Fire-proof ABS+PC UL 94 V-0.
Pressure Limits: 1.5 psig.
Accuracy: ±0.25% RSS (includes non-linearity: ±0.24% BFSL, hysteresis: ±0.05% and non-repeatability: ±0.05%), or ±0.5% RSS (includes non-linearity: ±0.49% BFSL, hysteresis: ±0.05% and non-repeatability: ±0.05%).
Process Connection: Barbed, fits 1/8″ and 3/16″ (3 mm and 5 mm) ID rubber or vinyl tubing.
Inputs: Two (2) user-selectable 4-20 mA, 0-5 VDC, or 0-10 VDC; USB type C used for cloning programming; One (1) digital input for door status.
Outputs: One (1) digital output (DO) rated 5 A @ 30 VDC; One (1) 4-20 mA or 0-10 V (user selectable) corresponding to internal pressure or retransmission of any input.
Ambient Temperature Limits: 32 to 122°F (0 to 50°C).
Power Requirements: 24 VAC/VDC.
Selectable Pressure Units: Pa, kPa, cm w.c., mm w.c., and in w.c.
Temperature Units: °F and °C.
Zero and Span Adjustments: Adjustable via touchscreen.
Power Consumption: 3.6 W @ 24 VDC.
Electrical Connection: Removable terminal block.
Display: 4.3″(10.9 cm) color TFT LCD, dimmable; 480 x 272 resolution.
Communications: Modbus® RTU, BACnet MS/TP.
Audible Alarm: 69.1 dB 10 cm from display.
Weight: 1.05 lb (0.476 kg).
Compliance: BTL, CE.

MODEL CHART

Model	Accuracy	Range
RSMC-A-002	±0.25%	0 to 0.25 in w.c.
RSMC-A-003	±0.25%	0 to 0.5 in w.c.
RSMC-A-004	±0.25%	0 to 1 in w.c.
RSMC-A-013	±0.25%	-0.25 to 0 to 0.25 in w.c.
RSMC-A-014	±0.25%	-0.5 to 0 to 0.5 in w.c.
RSMC-A-015	±0.25%	-1 to 0 to 1 in w.c.
RSMC-B-002	±0.5%	0 to 0.25 in w.c.
RSMC-B-003	±0.5%	0 to 0.5 in w.c.
RSMC-B-004	±0.5%	0 to 1 in w.c.
RSMC-B-013	±0.5%	-0.25 to 0 to 0.25 in w.c.
RSMC-B-014	±0.5%	-0.5 to 0 to 0.5 in w.c.
RSMC-B-015	±0.5%	-1 to 0 to 1 in w.c.

Note: To order with a stainless steel bezel, add "-SS" to the end of the part number.

ACCESSORIES

Model	Description
A-220	Clear flexible vinyl tubing is easily inspected, and is therefore best for test applications where a possibility of fluid entering the tubing exists. 3/16″ ID x 5/16″ OD, lengths to 500′; 45 psi maximum pressure @ 73°F
A-285	Remote alarm annunciator with visible/audible alarm and acknowledge switch
A-417A	Static pressure pickup. For use in clean rooms, 60 micron filter picks up static pressure. Stainless steel wall plate fits 2″ x 4″ electrical box. Sealed with foam gasket, screws included. Barbed brass fitting holds 1/8″ to 3/16″ ID tubing
A-418A	Static pressure pickup. Room mount with delta style plastic enclosure fits 2″ x 4″ electrical box. Fine mesh screen hides static pressure pickup port. Clean connection to 1/8″ to 3/16″ I.D. tubing and pressure sensor. Sealed with foam gasket, screws included
A-465	Flush mount space pressure sensor, white plastic
A-RSMC-BOX	Surface mount box for RSMC Series

OPTIONS

To order add suffix:	Description
-NIST	NIST traceable calibration certificate

Example: RSMC-A-002-FC

RSMC with stainless steel bezel option

Modbus® is a registered trademark of Schneider Electric USA, Inc.

ROOM STATUS MONITOR

Touchscreen LCD, Monitors Multiple Parameters

CALIBRATION SERVICES AVAILABLE

RSME with standard plastic bezel

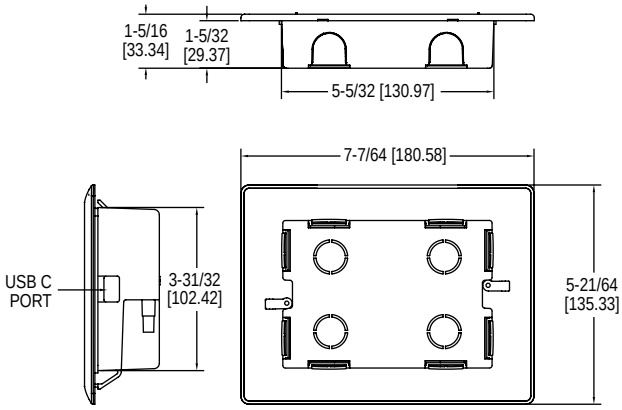

The **Series RSME Room Status Monitor** is designed for low differential pressure applications that require stringent pressure monitoring and alarming. It can be configured to monitor positive or negative pressure in clean rooms, hospital isolation rooms, laboratories, and vivariums. The RSME is a complete system with a touchscreen graphical user interface which enables access to pressure, humidity, temperature, air change, security, door status, calibration, and alarm setup. The graphical display color changes allows a clear determination of when the parameters are operating within the acceptable range (green), caution range (yellow), or have gone outside the acceptable operating range (red). The RSME room status monitor comes standard with BACnet MS/TP and Modbus® RTU communications.

BENEFITS/FEATURES

- User configurable graphical interface
- Monitors up to 3 rooms with a single unit
- Displays up to 4 parameters including pressure, relative humidity, temperature, air change, and/or door status
- Shallow mounting depth of 1.1″ (27.5 mm) allows for flush mount installation in areas with space constraints
- Full color 4.3″ touchscreen LCD incorporates color status indication: green for good, yellow for warning, and red for alarm
- Easy-to-clean optional brushed stainless steel bezel
- BACnet MS/TP and Modbus® RTU communication is standard
- Includes RSME, junction box, and USB-C/USB-A flash-drive

APPLICATIONS

- Hospital isolation rooms
- Pharmaceutical facilities
- Dental offices
- School nurse offices

SPECIFICATIONS

Service: Air.
Measurement Technology: Piezoresistive pressure sensor.
Wetted Materials: Front: PMMA window with IP65 rating; Back housing: ABS UL 94 V-0.
Pressure Limits: 1.5 psig.
Accuracy: ±0.5% RSS (includes non-linearity: ±0.49% BFSL, hysteresis: ±0.05% and non-repeatability: ±0.05%), or ±1% RSS (includes non-linearity: ±0.99% BFSL, hysteresis: ±0.05% and non-repeatability: ±0.05%), after 1 hour warm-up period.
Thermal Effect: ±0.02% FS/°F (includes zero and span).
Process Connection: Barbed, fits 1/8″ and 3/16″ (3 mm and 5 mm) ID rubber or vinyl tubing.
Inputs: Two (2) user-selectable 4-20 mA, 0-5 VDC, or 0-10 VDC; USB type C used for cloning programming; One (1) digital input for door status.
Outputs: One (1) digital output (DO) rated 5 A @ 30 VDC; One (1) 4-20 mA or 0-10 V (user selectable) corresponding to internal pressure or retransmission of any input.
Ambient Temperature Limits: 32 to 122°F (0 to 50°C).
Power Requirements: 24 VAC/VDC.
Selectable Pressure Units: Pa, kPa, cm w.c., mm w.c., and in w.c.
Temperature Units: °F and °C.
Zero and Span Adjustments: Adjustable via touchscreen.
Power Consumption: 2.64 W max.
Electrical Connection: Removable terminal block.
Display: 4.3″ (10.9 cm) color TFT LCD, dimmable; 480 x 272 resolution.
Communications: Modbus® RTU, BACnet MS/TP.
Audible Alarm: 69.1 dB 10 cm from display.
Weight: 13.6 oz (385.6 g).
Compliance: BTL, CE.

MODEL CHART

Model	Accuracy	Range
RSME-B-003	±0.5%	0 to 0.5 in w.c.
RSME-B-004	±0.5%	1 in w.c.
RSME-B-005	±0.5%	2.0 in w.c.
RSME-B-014	±0.5%	-0.5 to 0.5 in w.c.
RSME-B-015	±0.5%	-1.00 to 1.00 in w.c.
RSME-B-016	±0.5%	-2.0 to 2.0 in w.c.
RSME-C-003	±1%	0.5 in w.c.
RSME-C-004	±1%	1 in w.c.
RSME-C-005	±1%	2.0 in w.c.
RSME-C-014	±1%	-0.5 to 0.5 in w.c.
RSME-C-015	±1%	-1.00 to 1.00 in w.c.
RSME-C-016	±1%	-2.0 to 2.0 in w.c.

Note: To order with a stainless steel bezel, add "-SS" to the end of the part number.

OPTIONS

To order add suffix:	Description
-NIST	NIST traceable calibration certificate

Example: RSME-B-003-NIST

RSME with stainless steel bezel option

ACCESSORIES

Model	Description
A-220	Clear flexible vinyl tubing is easily inspected, and is therefore best for test applications where a possibility of fluid entering the tubing exists. 3/16″ ID x 5/16″ OD, lengths to 500′; 45 psi maximum pressure @ 73°F
A-285	Remote alarm annunciator with visible/audible alarm and acknowledge switch
A-417A	Static pressure pickup. For use in clean rooms, 60 micron filter picks up static pressure. Stainless steel wall plate fits 2″ x 4″ electrical box. Sealed with foam gasket, screws included. Barbed brass fitting holds 1/8″ to 3/16″ ID tubing
A-418A	Static pressure pickup. Room mount with Delta Style plastic enclosure fits 2″ x 4″ electrical box. Fine mesh screen hides static pressure pickup port. Clean connection to 1/8″ to 3/16″ I.D. tubing and pressure sensor Sealed with foam gasket, screws included
A-465	Flush mount space pressure sensor, white plastic
A-RSME-BOX	Surface mount box for RSME series

Modbus® is a registered trademark of Schneider Automation, Inc.

Dwyer

SERIES RPMC

STABILI*SENSE*™ CRITICAL ROOM PRESSURE MONITOR

Room Status Indication, Magnehelic® Gage Size

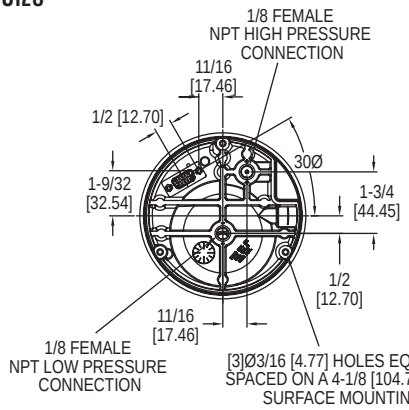

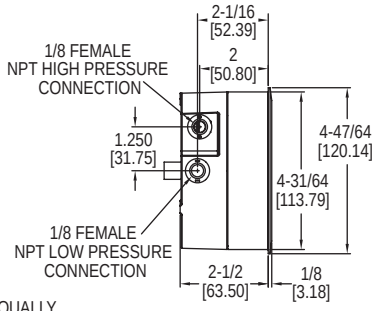

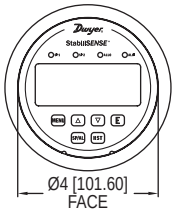

The **Series RPMC Stabili*SENSE*™ Critical Room Pressure Monitor** is designed for critical low differential pressure applications that require stringent pressure monitoring and alarming. The Series RPMC can be configured to monitor positive or negative pressure in protected environments and clean manufacturing areas. The RPMC is a complete system which enables access to pressure, security, calibration, and alarm setup. The RPMC Stabili*SENSE*™ critical room pressure monitor has a brushed stainless steel bezel that allows for easy cleaning.
The RPMC Stabili*SENSE*™ critical room pressure monitor has built-in status indication LEDs that will appear green when within the user-defined pressure set range and will appear orange when outside of the pressure set range. 2 SPDT independent control relays with adjustable deadbands are also provided along with a 4-20 mA process output.

BENEFITS/FEATURES

- Long term stable pressure measurements
- 2 SPDT relays allow for local alarming and alarming to control system
- Automatic or manual alarm reset
- Visual LED alarms provide immediate local alert allowing corrective action to be taken quicker to eliminate the problem from becoming widespread
- Stores peak and valley process readings
- Same installation diameter as Magnehelic® gage which simplifies field upgrade to RPMC Stabili*SENSE*™ critical room pressure monitor
- Password protected setup menu ensures no errors by untrained personnel

APPLICATIONS

- Clean manufacturing areas
- Semiconductor manufacturing
- Pharmaceutical
- Clean rooms
- Research labs
- Vivariums

SPECIFICATIONS

Service: Air and non-combustible, compatible gases.
Measurement Technology: Capacitance cell.
Wetted Materials: Consult factory.
Housing Material: Die cast aluminum case and SS bezel.
Accuracy: ±0.25% RSS (includes non-linearity: ±0.24%, hysteresis: ±0.05% and non-repeatability: ±0.05%), or ±0.5% RSS (includes non-linearity: ±0.49%, hysteresis: ±0.05% and non-repeatability: ±0.05%).
Pressure Limits: 2 psig.
Temperature Limits: 32 to 140°F (0 to 60°C).
Compensated Temperature Limits: 32 to 140°F (0 to 60°C).
Thermal Effects: 0.030%/°F (0.050/°C) from 77°F (25°C).
Power Requirements: 12-28 VDC, 12-28 VAC 50 to 400 Hz.
Power Consumption: 3 VA max.
Output Signal: 4-20 mA DC into 900 Ω max.
Zero and Span Adjustments: Accessible via menus.
Response Time: 8 ms.
Display: Backlit 4 digit LCD 0.4″ height LED indicators for set point and alarm status.
Electrical Connections: 15 pin male high density D-sub connection. 18″ (46 cm) cable with 10 conductors included.
Process Connections: 1/8″ female NPT. Side or back connections.
Mounting Orientation: Mount unit in vertical plane. Size: 4-3/4″ (120.7 mm) OD x 2-21/32 (67.5 mm).
Weight: 1.90 lb (862 g).
Agency Approvals: CE.

SWITCH SPECIFICATIONS
Switch Type: 2 SPDT relays.
Electrical Rating: 1 A @ 30 VAC/VDC.
Set Point Adjustment: Adjustable via keypad on face.

MODEL CHART

Model	Description
RPMC-A-002	Stabili*SENSE*™ critical room pressure monitor, 0.25% accuracy, 0-0.25 in w.c. range
RPMC-A-003	Stabili*SENSE*™ critical room pressure monitor, 0.25% accuracy, 0-0.5 in w.c. range
RPMC-A-013	Stabili*SENSE*™ critical room pressure monitor, 0.25% accuracy, -0.25-0-0.25 in w.c. range
RPMC-A-014	Stabili*SENSE*™ critical room pressure monitor, 0.25% accuracy, -0.5 0-0.5 in w.c. range
RPMC-B-002	Stabili*SENSE*™ critical room pressure monitor, 0.5% accuracy, 0-0.25 in w.c. range
RPMC-B-003	Stabili*SENSE*™ critical room pressure monitor, 0.5% accuracy, 0-0.5 in w.c. range
RPMC-B-013	Stabili*SENSE*™ critical room pressure monitor, 0.5% accuracy, -0.25-0-0.25 in w.c. range
RPMC-B-014	Stabili*SENSE*™ critical room pressure monitor, 0.5% accuracy, -0.5 0-0.5 in w.c. range

OPTIONS

Model	Description
-FC	Factory calibration certificate
-NIST	NIST traceable calibration certificate

ACCESSORIES

Model	Description
A-220	Clear flexible vinyl tubing is easily inspected, and is therefore best for test applications where a possibility of fluid entering the tubing exists. 3/16″ ID x 5/16″ OD, lengths to 500´; 45 psi maximum pressure @ 73°F
A-285	Remote alarm annunciator with visible/audible alarm and acknowledge switch
A-299	Mounting bracket flush mount Magnehelic® gage in bracket. Bracket is then surface mounted. Steel with gray hammertone epoxy finish. 6.3″ x 7.7″ x 4.0″, 1.30 lb.
A-300	Flat aluminum bracket for flush mounting
A-417A	Static pressure pickup. For use in clean rooms, 60 micron filter picks up static pressure. SS wall plate fits 2″ x 4″ electrical box. Sealed with foam gasket, screws included. Barbed brass fitting holds 1/8″ to 3/16″ ID tubing
A-418A	Static pressure pickup. Room mount with delta style plastic enclosure fits 2″ x 4″ electrical box. Fine mesh screen hides static pressure pickup port. Clean connection to 1/8″ to 3/16″ I.D. tubing and pressure sensor. Sealed with foam gasket, screws included
A-465	Flush mount space pressure sensor, white plastic

Dwyer
SERIES DM-2000

DIFFERENTIAL PRESSURE TRANSMITTERS

Same Size as Standard Magnehelic® Differential Pressure Gage

CALIBRATION SERVICES AVAILABLE

DM-2000-LCD

DM-2100-LCD

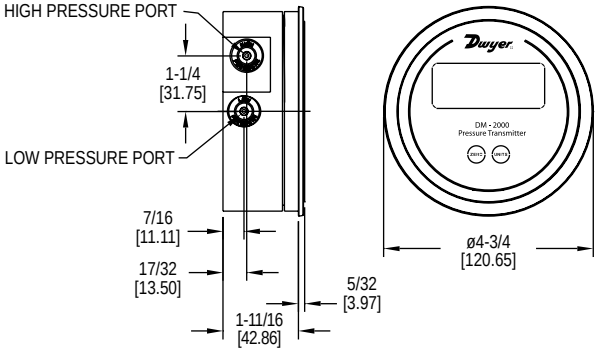

The Dwyer **Series DM-2000 Differential Pressure Transmitters** sense the pressure of air and compatible gases and sends a standard 4-20 mA output signal. The DM-2000 housing is specifically designed to mount in the same diameter cutout as a standard Magnehelic® gage. A wide range of models are available factory calibrated to specific ranges.

Pressure connections are inherent to the glass filled plastic molded housing making installation quick and easy. Digital push-button zero and span simplify calibration over typical turn-potentiometers. An optional 3.5 digit LCD shows process and engineering units. A single push-button allows field selection of 4 to 6 engineering units depending on range.

BENEFITS/FEATURES

- Zero and span controls provide easy calibration checks and shorter installation time to get device running and monitoring
- Quick response to pressure changes means no delay in signaling and alerting to critical situations
- Easy-to-read LCD display provides immediate local alerts allowing corrective action to be taken quicker to eliminate the problem from becoming widespread
- Same size as Magnehelic® simplifies field upgrade to digital pressure gage by reducing install steps
- Tamper proof button configuration to prevent accidental changes to the settings

APPLICATIONS

- Differential pressure across filters
- Fan control
- Static pressures in ducts or buildings

SPECIFICATIONS

Service: Air and non-combustible, compatible gases.
Wetted Materials: Consult factory.
Accuracy: ±1% FS, ±30 Pa model ±4% FS at 70°F.
Stability: ±1% FS/yr.
Temperature Limits: 20 to 120°F (-6.67 to 48.9°C).
Pressure Limits: 10 psig (0.69 bar).
Thermal Effect: ±0.055% FS/°F (0.099% FS/°C), ±30 Pa model ±0.13% FS/°F (0.234% FS/°C).
Power Requirements: 10-35 VDC (2-wire).
Output Signal: 4-20 mA.
Zero and Span Adjustments: Digital push-button zero and span.
Loop Resistance: DC: 0 to 1250 Ω maximum.
Current Consumption: DC: 38 mA max.
Electrical Connections: Screw-type terminal block.
Display: 3.5 digit LCD, 0.7″ H.
Process Connections: 1/8″ ID tubing.
Mounting Orientation: Vertical.
Weight: 4.8 oz (136 g).

MODEL CHART

Model	Range (in w.c.)	Pa	mm w.c.	mBar	kPa	psi
DM-2002-LCD	0 to .250	62.2	6.35	.622	-	-
DM-2003-LCD	0 to .500	124.3	12.70	1.243	.124	-
DM-2004-LCD	0 to 1.000	249	25.4	2.49	.249	-
DM-2005-LCD	0 to 2.00	497	50.8	4.97	.497	-

Note: For white overlay change -20 to -21. **Example:** DM-2105-LCD

OPTIONS

To order add suffix:	Description
-FC	Factory calibration certificate
-NIST	NIST traceable calibration certificate

Example: DM-2002-LCD-NIST

ACCESSORIES

Model	Description
A-299	Surface mounting bracket
A-300	Flat flush mounting bracket
A-302F-A	303 SS static pressure tip with mounting flange; for 3/16″ ID rubber or plastic tubing; 4″ insertion depth; includes mounting screws
A-320-B-SS	Instrument enclosure, 304 SS, brushed finish, compatible with 2000 Magnehelic® gage, DM-2000 differential pressure transmitter
A-320-BC	Weatherproof enclosure, ABS, compatible with 2000 Magnehelic® gage, DM-1000 DigiMag® digital differential pressure gage, DM-2000 differential pressure transmitter, Series 605 (with -SS option), instruments with backwards compatible bezel option
A-464	Flush mount kit for Magnehelic® gages
A-489	4″ straight static pressure tip with flange
SCD-PS	100-240 VAC/VDC to 24 VDC power supply

Process Tubing Options: See page 453 (Gage Tubing Accessories)

Dwyer

SERIES ISDP

INTRINSICALLY SAFE DIFFERENTIAL PRESSURE TRANSMITTER

For Hazardous Zone Pressure and Flow Applications

CALIBRATION SERVICES AVAILABLE

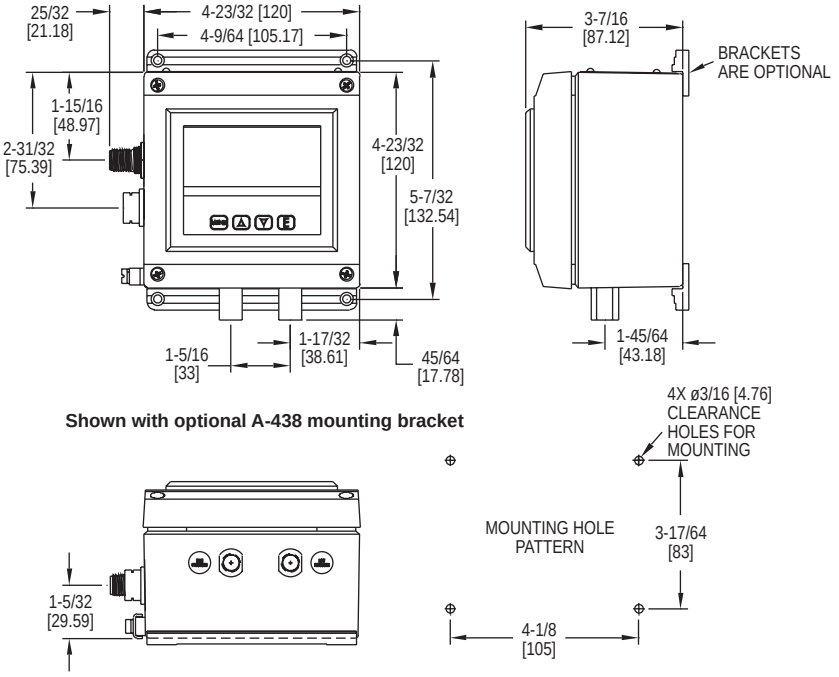

Shown with optional A-438 mounting bracket

The **Series ISDP Intrinsically Safe Differential Pressure Transmitter** provides a 4-20 mA process output, a robust NEMA 4X enclosure, plus a large LCD display that can be programmed to read in pressure, velocity or flow. The ISDP offers simplified programming via a Menu key that enables the user to select: security level; English or Metric engineering units; pressure, velocity or flow operation, K-factor for use with various Pitot tubes and flow sensors, circular or rectangular duct size for volumetric flow operation plus many more. The Series ISDP Differential Pressure Transmitter is powered on its 2-wire loop with 10-35 VDC via its integral M-12 four pin male connector. The ISDP provides a 0.5% full-scale accuracy on ranges from 0.25 in w.c. to 100 in w.c. as well as bi-directional models up to 10 in w.c. These features make the Series ISDP Differential Pressure Transmitter the ideal instrument for monitoring pressures or air flows in hazardous zones having a Class I Div. I Groups A, B, C, D; Class II Div. I Groups E, F, G; Class III Div. I ratings.

BENEFITS/FEATURES

- NEMA 4X rated enclosure provides protection in harsh environments permitting outdoor monitoring or in areas where dust and particulate matter exists
- Easy to read LCD display provides immediate local alerts allowing corrective action to be taken quicker to eliminate the problem from becoming widespread
- Intrinsically safe for use in the specified hazardous locations meets specifications where pressure transmission and safety cannot be compromised
- Password protected set up menu helps to insure no errors by untrained personnel when accessing the powerful measurement capabilities of this device

APPLICATIONS

- Hazardous zone pressure control applications
- Hazardous flow and control applications

SPECIFICATIONS

Service: Air and non-combustible gases.
Wetted Materials: Ranges 5 in w.c. and greater: glass, PVC, silicon, alumina ceramic, epoxy, RTV, gold, aluminum, stainless steel and nickel; Ranges 1 in w.c. and lower: stainless steel, silicone, gold and ceramic.
Housing Materials: Aluminum, glass.
Accuracy: ±0.5% at 77°F (25°C) including hysteresis and repeatability (after 1 hour warm-up).
Stability: < ±1% per year.
Pressure Limits: Ranges ≤ 2.5 in w.c. = 2 psi; 5 in w.c.: 5 psi; 10 in w.c.: 5 psi; 25 in w.c.: 5 psi; 50 in w.c.: 5 psi; 100 in w.c.: 9 psi.
Temperature Limits: 32 to 140°F (0 to 60°C).
Compensated Temperature Limits: 32 to 140°F (0 to 60°C).
Thermal Effects: 0.020%/°F (0.036/°C) from 77°F (25°C).
Power Requirements: 10-35 VDC.
Output Signal: 4-20 mA DC.
Zero and Span Adjustments: Accessible via menus.
Response Time: 250 ms (damping set to 1).
Display: 4 digit LCD 0.6″ H.
Electrical Connections: M-12 4 PIN Connector.
Process Connections: 1/8″ female NPT.
Enclosure Rating: Designed to meet NEMA 4X (IP66).
Mounting Orientation: Mount unit in vertical plane.
Weight: 2 lb 10 oz (1.19 kg).
Agency Approvals: CE: CENELEC EN 61326/55024: 2003; IEC 61000-4-2/3/4/6: 2001/2006/2004/2005; CENELEC EN 55011: 2006; 2004/108/EC EMC Directive. FM Intrinsically Safe CLI Div I GR: A, B, C, D; CLII Div I GR: E, F, G; CLIII Div I.

MODEL CHART

Model	Range (in w.c.)	Model	Range (in w.c.)
ISDP-002	0 to 0.25	**ISDP-012**	0 to ±0.25
ISDP-004	0 to 1	**ISDP-014**	0 to ±1.0
ISDP-006	0 to 5	**ISDP-015**	0 to ±2.5
ISDP-007	0 to 10	**ISDP-016**	0 to ±5.0
ISDP-008	0 to 25	**ISDP-017**	0 to ±10
ISDP-009	0 to 50		
ISDP-010	0 to 100		

OPTIONS

To order add suffix:	Description
-FC	Factory calibration certificate
-NIST	NIST traceable calibration certificate
Example: ISDP-004-NIST	

ACCESSORIES

Model	Description
A-231	16´ (5 m) shielded cable with 4 pin female M-12 connection
A-295	Female 4 pin M-12 to cable gland connector
A-438	Surface mounting brackets
A-486	4.9´ (1 m) shielded cable with 4 pin female M-12 connection
A-487	9.8´ (3 m) shielded cable with 4 pin female M-12 connection
A-488	33´ (10 m) shielded cable with 4 pin female M-12 connection
MTL5541	Intrinsically safe galvanic isolator
MTL7706	Intrinsically safe zener barrier

Process Tubing Options: See page 453 (Gage Tubing Accessories)

Dwyer
SERIES 605

MAGNEHELIC® DIFFERENTIAL PRESSURE INDICATING TRANSMITTER

Same Size as Standard Magnehelic® Differential Pressure Gage

CALIBRATION SERVICES AVAILABLE

Shown with optional -SS bezel
Backward compatible+ with Magnehelic® gage

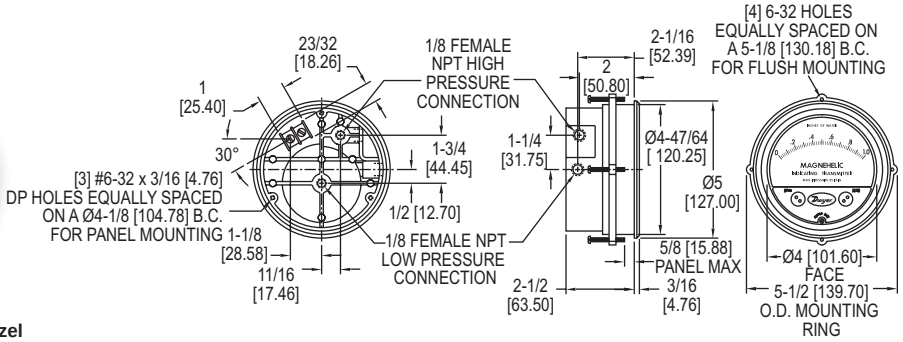

The **Series 605 Magnehelic® Differential Pressure Indicating Transmitter** provides for both visual monitoring and electronic control of very low differential pressure. The Series 605 is ideal for control applications in building HVAC systems where local indication is desired during routine maintenance checks or necessary when trouble shooting the system. The easily read dial gage is complimented by the 2-wire, 4-20 mA control signal utilizing the time-proven Dwyer® Magnehelic® gage mechanical design and Series 600 transmitter technology. The 2-wire design with terminal strip on the rear simplifies connection in any 4-20 mA control loop powered by a 10-35 VDC supply.

BENEFITS/FEATURES

- Easy to read gage permits viewing from far away
- Patented design provides quick response to pressure changes means no delay in signaling and alerting to critical situations
- Durable and rugged housing and high-quality components combined provides long-service life and minimized down-time
- Optional stainless steel bezel is the same installation diameter as Magnehelic® gage and simplifies field upgrade to 605 indicating transmitter

APPLICATIONS

- Monitor pressures in ducts, rooms, or total building pressures
- Filter monitoring
- Local indication of clean room pressures with process signal sent to control room

MODEL CHART

Model	Range in w.c.	Maximum Pressure	Electrical Accuracy ±%	Mechanical Accuracy ±%
605-00N	0.05-0-0.2	10 psi (68.95 kPa)	4	4
605-11	0 to ±.25	10 psi (68.95 kPa)	2	3
605-0	0 to .50	10 psi (68.95 kPa)	2	3
605-1	0 to 1.0	10 psi (68.95 kPa)	2	2
605-2	0 to 2.0	2 psi (13.79 kPa)	0.5	2
605-3	0 to 3.0	2 psi (13.79 kPa)	0.5	2
605-6	0 to 6.0	2 psi (13.79 kPa)	0.5	2
605-10	0 to 10	2 psi (13.79 kPa)	0.5	2
605-20	0 to 20.0	11 psi (75.8 kPa)	0.5	2
605-30	0 to 30	11 psi (75.8 kPa)	0.5	2
605-50	0 to 50	11 psi (75.8 kPa)	0.5	2
Model	**Range in Pa**	**Maximum Pressure**	**Electrical Accuracy ±%**	**Mechanical Accuracy ±%**
605-12	0 to ±60	10 psi (68.95 kPa)	4	4
605-13	0 to ±100	10 psi (68.95 kPa)	2	2
605-60PA	0 to 60	10 psi (68.95 kPa)	2	4
605-125PA	0 to 125	10 psi (68.95 kPa)	2	3
605-250PA	0 to 250	10 psi (68.95 kPa)	2	2
605-500PA	0 to 500	2 psi (13.79 kPa)	0.5	2

OPTIONS

To order add suffix:	Description
-NIST	NIST traceable calibration certificate
-SS	304 brushed stainless steel bezel. +Backward compatible with standard Magnehelic® gage installation diameter
Example: 605-3-SS	

ACCESSORIES

Model	Description
A-298	Flat aluminum bracket for flush mounting
A-370	Mounting bracket; flush mount Series 605 transmitter in bracket; bracket is then surface mounted; steel with gray hammertone epoxy finish

SPECIFICATIONS

GAGE SPECIFICATIONS
Service: Air and non-combustible, compatible gases.
Wetted Materials: Consult factory.
Accuracy: See chart.
Stability: ±1% FS/yr.
Pressure Limits: See chart.
Temperature Limits: 20 to 120°F (-6.67 to 48.9°C).
Process Connections: 1/8″ female NPT.
Size: 4″ (101.6 mm) dial face, 5″ (127 mm) OD x 2-11/16″ (68.3 mm); -SS bezel: 4-3/4″ (120.7 mm) OD x 2-21/32 (67.5 mm).
Weight: 1 lb 12.6 oz (811 g).
Agency Approvals: CE.

TRANSMITTER SPECIFICATIONS
Accuracy: See chart (includes linearity, hysteresis, repeatability).
Temperature Limits: 20 to 120°F (-6.67 to 48.9°C).
Compensated Temperature Range: 32 to 120°F (0 to 48.9°C).
Thermal Effect: ±0.025% FS/°F (0.045% FS/°C).
Power Requirements: 10-35 VDC (2-wire).
Output Signal: 4-20 mA.
Zero and Span Adjustments: Protected potentiometers.
Loop Resistance: DC: 0 to 1250 Ω max.
Current Consumption: DC: 38 mA max.
Electrical Connections: Screw terminal block.
Mounting Orientation: Diaphragm in vertical position. Consult factory for other position orientations.

Static Fitting Options: See page 452 (Static Pressure Tips)
Process Tubing Options: See page 453 (Gage Tubing Accessories)

Dwyer
SERIES AT-605

ATEX/IECEX APPROVED MAGNEHELIC® DIFFERENTIAL PRESSURE INDICATING TRANSMITTER

Series 605 in Flameproof ATEX/IECEx Enclosure

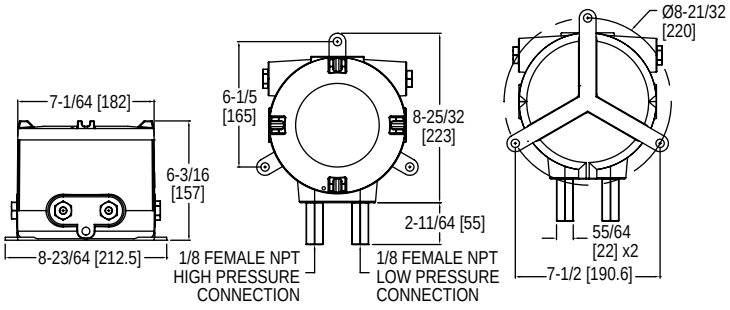

AT-102NA-605, shown with VS0 port/valve configuration

The **Series AT-605 ATEX/IECEx Approved Magnehelic® Differential Pressure Indicating Transmitter** provides for both visual monitoring and electronic control of very low differential pressure in hazardous locations. An easy-to-read dial gage is complimented by the two-wire, 4-20 mA control signal utilizing the time-proven Dwyer® Magnehelic® gage mechanical design and Series 600 transmitter technology. The two-wire design simplifies any 4-20 mA control loop powered by a 10-35 VDC supply. Flameproof enclosures are available in aluminum and can include a glass window for viewing process pressure on the gage face.

BENEFITS/FEATURES

- ATEX/IECEx housing provides all the capabilities and values of the Series 605 Magnehelic® transmitter in a flame and explosion proof enclosure
- Quick response to pressure changes means no delay in assessing critical situations
- Durable and rugged housing and high-quality components combined provide long-service life and minimized downtime
- High impact strength and high temperature rated for applications where hazardous environments exist
- Increased response time at low pressures with LD port configuration

APPLICATIONS

- Monitor duct, room, or total building pressures
- Filter monitoring
- Local indication of clean room pressures with process signal sent to control room
- Hazardous area pressure measurement and transmitter

PRESSURE LIMITS

Port/Valve	One Pressure Port Connected	Both Pressure Ports Connected
VS0	10 kPa	10 kPa
VL0	10 kPa	10 kPa
VS1	20 kPa	15 kPa
VS2	40 kPa	20 kPa
VL1	20 kPa	15 kPa

SPECIFICATIONS

GAGE SPECIFICATIONS
Service: Air and non-combustible, compatible gases.
Wetted Materials: Consult factory.
Accuracy: See page reference ❶ below.
Pressure Limits: See pressure limit chart.
Temperature Limits: 20 to 120°F (-6.67 to 48.9°C) (**Note:** Product temperature limits differ from case).
Size: 4″ (101.6 mm) dial face.

TRANSMITTER SPECIFICATIONS
Accuracy: See page reference ❶ below. Includes linearity, hysteresis, repeatability.
Compensated Temperature Range: 32 to 120°F (0 to 48.9°C).
Thermal Effect: ±0.025% FS/°F (0.045% FS/°C).
Stability: ±1% FS/year.
Power Requirements: 10-35 VDC (2-wire).
Output Signal: 4-20 mA.
Zero and Span Adjustments: Protected potentiometers on 605 face. Can access those by opening case. Allowed only in safe zone.
Loop Resistance: DC: 0 to 1250 Ω max.
Current Consumption: DC: 38 mA max.
Electrical Connections: Screw terminal block.
Mounting Orientation: Diaphragm in vertical position.
Enclosure Rating: IP66 (IP65 for versions VS1/VS2/VL1).
Housing Material: Aluminum.
Finishing: Texture epoxy coat RAL7015.
Process Connections: 1/8″ NPT female brass (SS optional).
Electrical Connections: Two 1/2″ NPT female. Cable gland not included.
Weight: 13.2 lb (6.0 kg).
ATEX Certificate: INERIS 21ATEX0033X.
IECEx Certificate: IECEx INE 21.0064X.
Compliance: ATEX: CE 0080 Ex II 2G Ex db IIC T5, T6 Gb -60°C≤Ta≤+50°C (T6) -60°C≤Ta≤+60°C (T5); II 2D Ex tb IIIC T75°C Db
IECEx: Ex db IIC T5, T6 Gb -60°C≤Ta≤+50°C (T6) -60°C≤Ta≤+60°C (T5) Ex tb IIIC T75°C Db.

MODEL CHART

Example	AT	-102NA	-605	-00N	-W	1	VS0	12	AT-102NA-605-00N-W1VS012
Enclosure	AT								ATEX/IECEx approved enclosure
Housing Material		102NA							Aluminum enclosure
Series			605						605 differential pressure indicating transmitter
Range				00N 11 0 1 2 3 6 10 20 30 50 60PA 125PA 250PA 500PA					.05-0-.20 in w.c. .25-0-.25 in w.c. 0-.50 in w.c. 0-1.0 in w.c. 0-2.0 in w.c. 0-3.0 in w.c. 0-6.0 in w.c. 0-10 in w.c. 0-20.0 in w.c. 0-30 in w.c. 0-50 in w.c. 0-60 Pa 0-125 Pa 0-250 Pa 0-500 Pa
Cover					B W				Blind Glass window
Port/Valve Material						1 2			Brass SS
Port/Valve Configurations							VS0 VL0 VS1 VS2 VL1		STD port/no valve LD port/no valve STD port/STD valve STD port/LD valve LD port/LD valve
Cable Entry								12	1/2″ NPT ANSI/ASME B1.20.1

USA: California Proposition 65
⚠**WARNING:** This product can expose you to chemicals including Lead, which is known to the State of California to cause cancer and birth defects or other reproductive harm. For more information go to www.P65Warnings.ca.gov.

❶**605 Ordering Page: See page 67 (Series 605)**

Dwyer
SERIES AT-MSX

ATEX/IECEX APPROVED MAGNESENSE® DIFFERENTIAL PRESSURE TRANSMITTER

Series MSX Flameproof ATEX/IECEx Enclosure

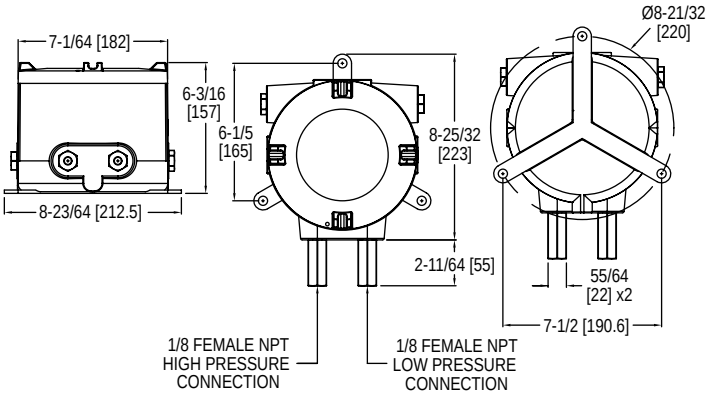

AT-102NA-MSX, shown with VS0 port/valve configuration

The **Series AT-MSX ATEX/IECEx Approved Magnesense® Differential Pressure Transmitter** is an extremely versatile transmitter for monitoring pressure and air velocity in hazardous areas. This transmitter is loaded with features such as: field selectable English or metric ranges, field upgradeable LCD display, adjustable dampening of output signal, and the ability to select a square root output for use with pitot tubes and other similar flow sensors. Along with these features, the piezo sensing technology provides long-term performance and enables the Magnesense® transmitter to be the solution for a myriad of pressure and flow applications. Flameproof enclosures are available in aluminum and can include a glass window for viewing process on the LCD.

BENEFITS/FEATURES

- All the capabilities and value of the MSX in an ATEX/IECEx approved enclosure
- Long service life and minimized downtime due to durable, rugged housing and high-quality components
- High impact strength and high temperature rated for applications where hazardous environments exist

APPLICATIONS

- Monitor pressures in ducts, rooms, or total building pressure
- Filter monitoring
- Local indication of clean room pressures with process signal sent to control room
- Hazardous area pressure measurement and transmitter

SPECIFICATIONS

Service: Air and non-combustible, compatible gases.
Wetted Materials: Consult factory.
Accuracy: ±1% FSO.
Stability: ±1% FSO/year.
Temperature Limits: -4 to 158°F (-20 to 70°C).
Pressure Limits: See chart.
Power Requirements: 10-36 VDC (2-wire), 17-36 VDC or isolated 21.6-33 VAC (3-wire).
Output Signal: 4-20 mA (2-wire); 0-10 V or 0-5 V selectable (3-wire).
Response Time: Instantaneous (default) or 3 s (selectable) without considering delay caused by Exd flame arrestors (up to 30 s from FS to zero depending model and ranges with STD pressure ports) about 15 s with LD pressure ports on very low ranges.
Zero and Span Adjustments: Digital push-button.
Loop Resistance: Current output: 0 to 1250 Ω max.; Voltage output: min. load resistance 1 kΩ.
Current Consumption: 21 mA max continuous.
Display: 4 digit LCD.
Electrical Wiring: 4-wire removable European style terminal block for 16-26 AWG.
Mounting Orientation: Pressure sensor measurement unaffected by orientation.
Enclosure Rating: IP66.
Housing Material: Aluminum.
Finishing: Texture epoxy coat RAL7038.
Process Connections: 1/8″ NPT female brass (SS optional).
Electrical Connections: Two 1/2″ NPT female. Cable gland not included.
Weight: 12.3 lb (5.6 kg).
ATEX Certificate: INERIS 21ATEX0033X.
IECEx Certificate: IECEx INE 21.0064X.
Compliance: ATEX: CE 0080 Ex II 2G Ex db IIC T5, T6 Gb -60°C≤Ta≤+50°C (T6) -60°C≤Ta≤+60°C (T5); II 2D Ex tb IIIC T75°C Db
IECEx: Ex db IIC T5, T6 Gb -60°C≤Ta≤+50°C (T6) -60°C≤Ta≤+60°C (T5) Ex tb IIIC T75°C Db.

MODEL CHART

Example	AT	-102NA	-MSX	-1	0	-IN	-LCD	-W	1VS0	12	AT-102NA-MSX-10-IN-LCD-W1VS012
Enclosure	AT										ATEX/IECEx approved enclosure
Housing Material		102NA									Aluminum enclosure
Series			MSX								Magnesense® differential pressure transmitter
Direction				1 2							Uni-directional Bi-directional
Pressure Range					0 1 2 3						0.5 in w.c., 125 Pa, 12 mm w.c. 1 in w.c., 250 Pa, 25 mm w.c. 5 in w.c., 1250 Pa, 125 mm w.c. 28 in w.c., 7000 Pa, 700 mm w.c.
Units of Measure						IN PA MM					Inches of water column Pascal Millimeters of water column
Display							LCD				With LCD
Cover								B W			Blind Glass window
Port/Valve Material and Port/Valve Configurations									1VS0 1VS1 1VS2 2VS0 2VS1 2VS2		Brass and STD port/no valve Brass and STD port/STD valve Brass and STD port/LD valve Stainless steel and STD port/NO valve Stainless steel and port/STD valve Stainless steel and STD port/LD valve
Cable Entry										12	1/2″ NPT ANSI/ASME B1.20.1

PRESSURE LIMITS

Port/Valve	One Pressure Port Connected	Both Pressure Ports Connected
VS0	10 kPa	10 kPa
VS1	20 kPa	15 kPa
VS2	40 kPa	20 kPa

USA: California Proposition 65
WARNING: This product can expose you to chemicals including Lead, which is known to the State of California to cause cancer and birth defects or other reproductive harm. For more information go to www.P65Warnings.ca.gov.

Dwyer

SERIES MSX PRO

MAGNESENSE® DIFFERENTIAL PRESSURE TRANSMITTER

Monitors Differential Pressure, Air Velocity, and Volumetric Flow

5 YEAR LIMITED WARRANTY

VIDEO ONLINE

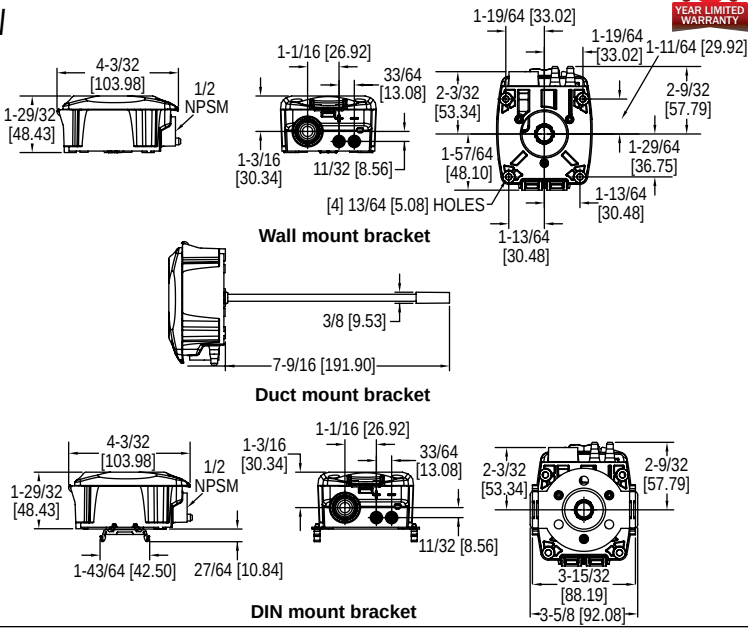

The **Series MSX Pro Magnesense® Differential Pressure Transmitter** is the professional differential pressure transmitter meeting stringent industry standards with innovative global product design. The device has exceptional stability for use in critical building performance applications with the popular versatility of our original Series MS2 Magnesense® II transmitter. The MSX Pro simplifies the ordering process to deliver the desired configuration, which reduces product setup time. Pressure ranges of Pa, mm w.c., and in w.c. are available per device. All pressure ranges can be configured in unidirectional or bidirectional modes providing a total of 32 ranges. The MSX Pro transmitter can provide a linear pressure output or a linear velocity output with the square root extraction from the transmitter. Additional parameters have been included to expand the square root capability to calculate flow. Dual voltage and milliamp output signals can be used to provide control and equipment output signal verification.

BENEFITS/FEATURES

- Easily access the unit's wiring via the flip-lid housing
- Eliminates accidental damage to the unit during installation with the products innovative design shielding the electronics underneath the PCB
- Added security and protection from the tamper-resistant cover
- Protection from liquids and moisture near the cable egress point with the included liquid tight cable gland fitting
- Reduce installation time with quick and easy wiring via the included a toolless terminal block
- Add safety to variety of applications that need to meet municipal and building code standards with UL94 V-0 and plenum ratings
- Supports exacting measurement and control for critical environments through precision accuracy

APPLICATIONS

- High performance building applications for critical environments
- Filter monitoring in air handler units
- Building pressure in pharmaceutical/semiconductor clean rooms
- Duct static pressure in commercial and specialized buildings
- Air velocity/flow in VAV systems

MODEL CHART

Example	MSXP	-W	1	3	-IN	-LCD	MSXP-W13-IN-LCD
Series	MSXP						Magnesense® differential pressure transmitter
Mounting		W U N					Wall mount Universal (wall or duct) mount DIN rail mount
Direction			1 2				Unidirectional Bidirectional
Range				0 1 2 3 4			.5 in w.c., 125 Pa, 12.5 mm w.c. 1 in w.c., 250 Pa, 25 mm w.c. 5 in w.c., 1250 Pa, 125 mm w.c. 28 in w.c., 7000 Pa, 700 mm w.c. 15 in w.c., 4000 Pa, 400 mm w.c.
Pressure Unit					IN PA MM		Inches water column Pascal Millimeters water column
Options						A481 COM FC FP LCD NIST STX WO	Installer kit, includes 2 plastic static pressure tips and 7 ft (2.1m) of PVC tubing BACnet/Modbus® communications Factory calibration certificate Filtered pickup with barb Liquid crystal display NIST traceable calibration certificate Two (2) plastic static pressure tips LCD cover without LCD display

SPECIFICATIONS

Service: Air and non-combustible,compatible gases.
Wetted Materials: Consult factory.
Accuracy: ±0.5% FSO for all ranges except unidirectional .5 in. @ ±1% FSO.
Stability: ±1% FSO/year.
Temperature Limits: -4 to 158°F (-20 to 70°C).
Pressure Limits: Ranges 0 and 1: 3.6 psi max operation, 6 psi burst; Ranges 2, 3 and 4: 6 psi max operation, 6 psi burst.
Power Requirements: 10-36 VDC (2-wire), 17-36 VDC or isolated 21.6-33 VAC (3-wire).
Output Signals: 4-20 mA (2-wire); 0-10 V or 0-5 V selectable (3-wire).
Response Time: Instantaneous (default) or 3 s (selectable).
Zero and Span Adjustments: Digital push-button.
Loop Resistance: Current output: 0-1250 Ω max; Voltage output: min. load resistance 1 kΩ.
Current Consumption: 21 mA max continuous.
Electrical Connections: 4-wire removable European style terminal block for 16 to 26 AWG.
Electrical Entry: 1/2″ NPS thread. Cable gland included.
Display (optional): 4 digit LCD.
Process Connections: 1/8″, 3/16″, 1/4″, 5 mm, and 6 mm ID flexible tubing.
Enclosure Rating: NEMA 4X (IP66), UL 2043 (Plenum), UL94 V-0.
Mounting Orientation: Pressure sensor measurement unaffected by orientation.
Weight: 8.0 oz (230 g).
Compliance: CE.

OPTIONS

Range	in w.c.	Pa low	Pa high	mm w.c.
Range 0	0.05 0.1 0.25 0.5*	15 25 40 50	60 75 100 125*	1.25 2.5 5 12*
Range 1	0.1 0.25 0.5 1*	25 40 50 60	100 150 160 250*	2.5 5 10 25*
Range 2	1 2 3 5*	250 300 400 500	600 750 1000 1250*	25 50 100 125*
Range 3	10 15 25 28*	1000 1500 2000 2500	3000 4000 5000 7000*	250 350 500 700*
Range 4	1 5 10 15*	250 300 400 500	1000 2000 3000 4000*	25 125 250 400*

*Indicated values are the positive full scale output values per range.
Note: Ranges indicated in the table are the high end of the set range. All ranges have a low end pressure value of 0.

ACCESSORIES

Model	Description
A-480	Plastic static pressure tip
A-481	Installer kit, includes 2 plastic static pressure tips and 7 ft (2.1 m) of PVC tubing
A-MSXP-LCD	Replacement display for the Series MSX Pro

Modbus® is a registered trademark of Schneider Electric USA, Inc.

MAGNESENSE® DIFFERENTIAL PRESSURE TRANSMITTER

Monitors Differential Pressure, Air Velocity, and Volumetric Flow

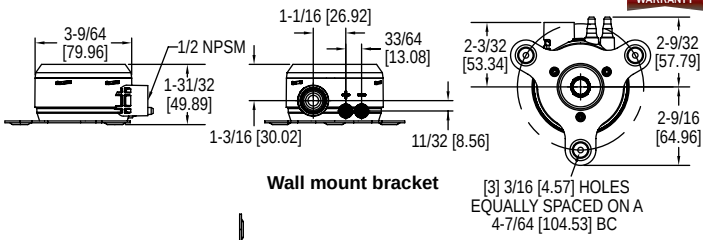

Wall mount bracket

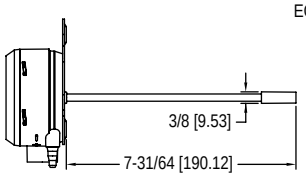

Duct mount bracket

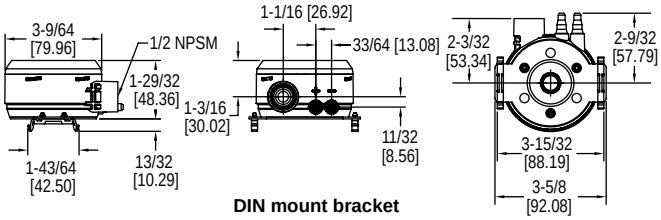

DIN mount bracket

The **Series MSX Magnesense® Differential Pressure Transmitter** combines the stability and versatility of the original Series MS2 Magnesense® II transmitter for use in building control applications. The MSX simplifies the ordering process to deliver the desired configuration, which reduces product setup time. Pressure ranges are available in Pa, mm w.c., and in w.c. All pressure ranges can be configured in unidirectional or bidirectional modes, providing a total of 32 ranges. The MSX transmitter can provide a linear pressure output or a linear velocity output with the square root extraction from the transmitter. Additional parameters have been included to expand the square root capability for calculating flow. Dual voltage and milliamp output signals can be used to provide both control and equipment output signal verification.

BENEFITS/FEATURES

- Read LCD values easier with rotatable 180° display
- Quick and easy wiring via the optional toolless terminal block
- Add safety to variety of applications with UL94 V-0 and plenum ratings

APPLICATIONS

- Filter monitoring in air handler units
- Building pressure in pharmaceutical/semiconductor clean rooms
- Duct static pressure in commercial buildings
- Air velocity/flow in VAV systems

MODEL CHART

Example	MSX	-W	1	3	-IN	-LCD	MSX-W13-IN-LCD
Series	MSX						Magnesense® differential pressure transmitter
Mounting		W U N					Wall mount Universal (wall or duct) mount DIN rail mount
Direction			1 2				Unidirectional Bidirectional
Range				0 1 2 3 4			.5 in w.c., 125 Pa, 12.5 mm w.c. 1 in w.c., 250 Pa, 25 mm w.c. 5 in w.c., 1250 Pa, 125 mm w.c. 28 in w.c., 7000 Pa, 700 mm w.c. 15 in w.c., 4000 Pa, 400 mm w.c.
Pressure Unit					IN PA MM		Inches water column Pascal Millimeters water column
Options						A481 COM FC FP GLD LCD NIST STX TT WO	Installer kit, includes 2 plastic static pressure tips and 7 ft (2.1m) of PVC tubing BACnet/Modbus® communications Factory calibration certificate Filtered pickup with barb Liquid tight cable gland fitting Liquid crystal display NIST traceable calibration certificate Two (2) plastic static pressure tips Toolless terminal block LCD cover without LCD display

SPECIFICATIONS

Service: Air and non-combustible, compatible gases.
Wetted Materials: Consult factory.
Accuracy: ±1% FSO.
Stability: ±1% FSO/year.
Temperature Limits: -4 to 158°F (-20 to 70°C).
Pressure Limits: Ranges 0 and 1: 3.6 psi max operation, 6 psi burst; Ranges 2, 3 and 4: 6 psi max operation, 6 psi burst.
Power Requirements: 10-36 VDC (2-wire), 17-36 VDC or isolated 21.6-33 VAC (3-wire).
Output Signals: 4-20 mA (2-wire); 0-10 V or 0-5 V selectable (3-wire).
Response Time: Instantaneous (default) or 3 s (selectable).
Zero and Span Adjustments: Digital push-button.
Loop Resistance: Current output: 0-1250 Ω max; Voltage output: min. load resistance 1 kΩ.
Current Consumption: 21 mA max continuous.
Electrical Connections: 4-wire removable European style terminal block for 16 to 26 AWG.
Electrical Entry: 1/2″ NPS thread.
Display (optional): 4 digit LCD.
Process Connections: 1/8″, 3/16″, 1/4″, 5 mm, and 6 mm ID flexible tubing.
Enclosure Rating: NEMA 4X (IP66), UL 2043 (Plenum), UL94 V-0.
Mounting Orientation: Pressure sensor measurement unaffected by orientation.
Weight: 8.0 oz (230 g).
Compliance: CE.

OPTIONS

Range	in w.c.	Pa low	Pa high	mm w.c.
Range 0	0.1 0.15 0.25 0.5*	25 30 40 50	60 75 100 125*	2.5 5 10 12*
Range 1	0.1 0.25 0.5 1*	25 40 50 60	100 150 160 250*	2.5 5 10 25*
Range 2	1 2 3 5*	250 300 400 500	600 750 1000 1250*	25 50 100 125*
Range 3	10 15 25 28*	1000 1500 2000 2500	3000 4000 5000 7000*	250 350 500 700*
Range 4	1 5 10 15*	250 300 400 500	1000 2000 3000 4000*	25 125 250 400*

*Indicated values are the positive full-scale output values per range.
Note: Ranges indicated in the table are the high end of the set range. All ranges have a low end pressure value of 0.

ACCESSORIES

Model	Description
A-480	Plastic static pressure tip
A-481	Installer kit, includes 2 plastic static pressure tips and 7 ft (2.1 m) of PVC tubing
A-MSX-LCD	Replacement display for the Series MSX

Modbus® is a registered trademark of Schneider Electric USA, Inc.

Dwyer
SERIES AT-MS

ATEX/IECEX APPROVED MAGNESENSE® DIFFERENTIAL PRESSURE TRANSMITTER

Series MS in Flameproof ATEX/IECEx Enclosure

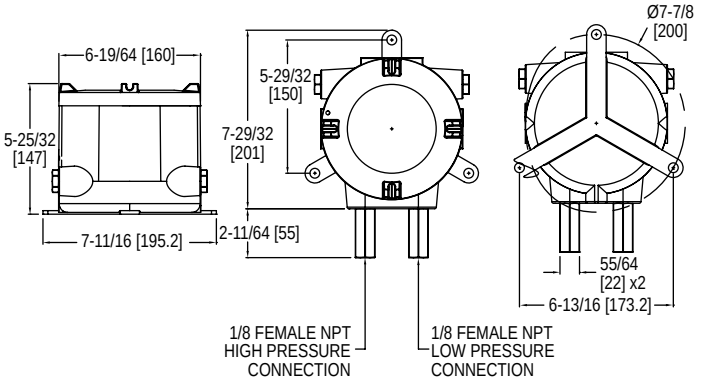

AT-101NA-MS, shown with VS0 port/valve configuration

The **Series AT-MS ATEX/IECEx Approved Magnesense® Differential Pressure Transmitter** is an extremely versatile transmitter for monitoring pressure and air velocity in hazardous areas. This transmitter is loaded with features such as: field selectable English or metric ranges, field upgradeable LCD display, adjustable dampening of output signal and the ability to select a square root output for use with pitot tubes and other similar flow sensors. Along with these features, the magnetic sensing technology provides long-term performance and enables the Magnesense® transmitter to be the solution for a myriad of pressure and flow applications. Flameproof enclosures are available in aluminum and can include a glass window for viewing process on the LCD.

BENEFITS/FEATURES

- All the capabilities and value of the MS2 in an ATEX/IECEx approved enclosure
- Long service life and minimized downtime due to durable, rugged housing and high-quality components
- High impact strength and high temperature rated for applications where hazardous environments exist
- Increased response time at low pressures with LD port configuration

APPLICATIONS

- Monitor pressures in ducts, rooms, or total building pressures
- Filter monitoring
- Local indication of clean room pressures with process signal sent to control room
- Hazardous area pressure measurement and transmitter

PRESSURE LIMITS		
Port/Valve	One Pressure Port Connected	Both Pressure Ports Connected
VS0	10 kPa	10 kPa
VL0	10 kPa	10 kPa

SPECIFICATIONS

Service: Air and non-combustible, compatible gases.
Wetted Materials: Consult factory.
Accuracy: MS-X21: 0.5 in w.c. and 0.25 in w.c.: ±1%; 0.1 in w.c.: ±2%; 100 Pa and 50 Pa: ±1%; 25 Pa: ±2%. MS-X11: 5 in w.c. and 2 in w.c.: ±1%; 1 in w.c.: ±2%; 1250 Pa and 500 Pa: ±1%; 250 Pa: ±2% (@ standard conditions).
Stability: ±1% FS/year.
Temperature Limits: 0 to 150°F (-18 to 66°C) (**Note:** Product temperature limits differ from case).
Pressure Limits: 1 psi max., operation; See pressure limit chart for burst.
Power Requirements: 10-35 VDC (2-wire); 17-36 VDC or isolated 21.6-33 VAC (3-wire).
Output Signals: 4-20 mA (2-wire); 0-5 V, 0-10 V (3-wire).
Response Time: 300 ms.
Zero and Span Adjustments: Digital push-button. In safe zone only.
Loop Resistance: Current output: 0 to 1250 Ω max.; Voltage output: min. load resistance 1 kΩ.
Current Consumption: 40 mA max.
Display: 4 digit LCD.
Electrical Wiring: 4-20 mA, 2-wire: European style terminal block for 16 to 26 AWG. 0-10 V, 3-wire: European style terminal block 16 to 22 AWG.
Mounting Orientation: Diaphragm in vertical position.
Enclosure Rating: IP66.
Housing Material: Aluminum.
Finishing: Texture epoxy coat RAL7015.
Process Connections: 1/8″ NPT female brass (SS optional).
Electrical Connections: Two 1/2″ NPT female. Cable gland not included.
Weight: 11 lb (5 kg).
ATEX Certificate: INERIS 21ATEX0033X.
IECEx Certificate: IECEx INE 21.0064X.
Compliance: ATEX: CE 0080 Ex II 2G Ex db IIC T5, T6 Gb -60°C≤Ta≤+50°C (T6) -60°C≤Ta≤+60°C (T5); II 2D Ex tb IIIC T75°C Db
IECEx: Ex db IIC T5, T6 Gb -60°C≤Ta≤+50°C (T6) -60°C≤Ta≤+60°C (T5) Ex tb IIIC T75°C Db.

MODEL CHART

Example	AT	-101NA	-MS	-0	1	-LCD	-W	1	VS0	12	AT-101NA-MS-01-LCD-W1VS012
Enclosure	AT										ATEX/IECEx approved enclosure
Housing Material		101NA									Aluminum enclosure
Series			MS								Magnesense differential pressure transmitter
Output				0 1 2 3 6 7 8 9							Bidirectional 4-20 mA Positive range 4-20 mA Bidirectional 0-10 V Positive range 0-10 V Bidirectional 0-5 V Positive range 0-5 V Bidirectional 0-5 V output 0-12 VDC input (not all ranges) Positive range 0-5 V output 0-12 VDC input (not all ranges)
Range					1 2 3 4 5						1, 2, 5 in w.c. and 250, 500, 1250 Pa 0.1, 0.25, 0.5 in w.c. and 25.50, 100 Pa 10 in w.c. and 2 kPa 15 in w.c. and 3 kPa 25 in w.c. and 5 lPa
Options						LCD					With LCD
Cover							B W				Blind Glass window
Port/Valve Material								1 2			Brass SS
Port/Valve Configurations									VS0 VL0		STD port/no valve LD port/no valve
Cable Entry										12	1/2″ NPT ANSI/ASME B1.20.1

USA: California Proposition 65
WARNING: This product can expose you to chemicals including Lead, which is known to the State of California to cause cancer and birth defects or other reproductive harm. For more information go to www.P65Warnings.ca.gov.

Dwyer
SERIES 3500

SMART DIFFERENTIAL PRESSURE TRANSMITTER

HART® Communication, Push Button Configuration, Rangeability (Up to 25:1)

CALIBRATION SERVICES AVAILABLE

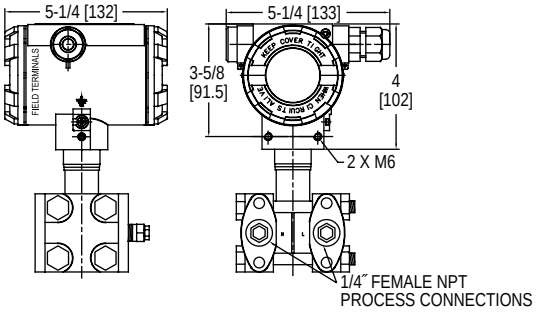

The **Series 3500 Smart Differential Pressure Transmitter** is a microprocessor-based high performance transmitter, which has flexible pressure calibration, push button configuration, and is programmable using HART® Communication. The Series 3500 is capable of being configured for differential pressure or level applications with the zero and span buttons. A field calibrator is not required for configuration. The transmitter software compensates for thermal effects, improving performance. EEPROM stores configuration settings and stores sensor correction coefficients in the event of shutdowns or power loss. The Series 3500 can be configured to be ATEX or IECEX approved for use in hazardous (classified) locations. The rangeability allows the smart transmitter to be configured to fit any application.

BENEFITS/FEATURES
- High accuracy (±0.075% FS)
- Rangeability (up to 25:1)
- Configurable using zero/span buttons (no calibrator required)
- Fail-mode process function
- Automatic ambient temperature compensation

APPLICATIONS
- Flow measurement
- Level monitoring
- Filter or pump differential pressure
- Critical process monitoring

MODEL CHART

Model	Range
3500-AL-02-NF-2	-10 to 10 in w.c.
3500-AL-04-NF-2	0 to 30 in w.c.
3500-AL-08-NF-2	0 to 100 in w.c.
3500-AL-10-NF-2	-200 to 200 in w.c.
3500-AL-15-NF-2	0 to 1000 in w.c.
3500-AL-20-NF-2	0 to 15 psi

Note: Bar ranges are also available.

SPECIFICATIONS

Service: Compatible gases, steam, liquids or vapors.
Wetted Materials: 316L SS and FPM; with diaphragm seal: 316L SS.
Accuracy: ±0.075% FS (@ 20°C).
Rangeability: Up to 25:1 turn down.
Stability: ≤0.075% FSO/3 years.
Temperature Limits: Ambient: -40 to 185°F (-40 to 85°C); Process with -DS: -40 to 400°F (-40 to 204°C).
Thermal Effect: < ±0.05% span/10°C.
Power Requirements: 10-55 VDC.
Output Signal: 4-20 mA.
Response Time: 16 to 480 ms (programmable).
Damping Time: 0 to 60 s.
MTBF (Mean Time Between Failure): 124 years.
MTTF (Mean Time To Failure): MTBF minus 8 h.

Electrical Connection: Packing gland M20x1.5, two 1/2″ female NPT conduit, screw terminal.
Process Connections: 1/4″ female NPT.
Enclosure Rating: NEMA 4X IP66/IP67.
Compliance: CE; -IS, -FP suffix: ATEX Compliant CE 0518 II 2G Ex ia/db IIC T6/T5 Gb Ta<80°C, T5 / II 2D Ex ia/tb IIIC T85°C/T100°C Db. Type Certificate No. KDB 17ATEX0056X. ATEX Standards: EN 60079-0:2012+A11:2013, EN 60079-1:2014, EN 60079-11:2012, EN 60079-26:2015, EN 60079-31:2014 IECEx Compliant: Ex ia/db IIC T6/ T5 Gb / Ex ia/tb IIIC T85°C/T100° Db. Certificate of Conformity IECEx KDB 17.0008X. IECEx Standards: IEC 60079-0:2011, IEC 60079-1:2014-06, IEC 60079-11:2011, IEC 60079-26:2006, IEC 60079-31:2013.

MODEL CHART

Example	3500	-AL	-01	-DS	-1	-SPRB	A	0	-1	-1	-NIST	3500-AL-01-DS-1-SPRBA0-1-1-NIST
Series	3500											Smart differential pressure smart transmitter
Housing		AL AS										Aluminum housing SS housing
Range			02 04 08 10 15 20 25 38 40 50 60									-10 to 10 in w.c. 0 to 30 in w.c. 0 to 100 in w.c. -200 to 200 in w.c. 0 to 1000 in w.c. 0 to 15 psi 0 to 100 psi 0 to 230 psi 0 to 1000 psi -2.5 to 2.5 in w.c. -1.5 to 1.5 psi
Process Connections				NF DS								1/4″ female NPT adaptor Diaphragm seal selection
Electrical Connections					1 2							Packing gland M20x1.5 Thread 1/2″ female NPT
Diaphragm Seal Type						SPDH SPRB SPRH STDH STRB STRH						S-P flush diaphragm seal direct mount high side S-PK flush diaphragm seal capillary type both sides S-PK flush diaphragm seal capillary type high side S-T extended diaphragm seal direct mount high side S-TK extended diaphragm seal capillary type both sides S-TK extended diaphragm seal capillary type high side
Mounting Flange							A B C D					2″ ANSI 2″ DN50 3″ ANSI 3″ DN80
Extension Length								0 2 4 6				No extension, flush mount 2″ (50 mm) 4″ (100 mm) 6″ (150 mm)
Capillary Length High Side									#			High side capillary length, 1 to 20 ft (increments of 1)
Capillary Length Low Side										#		Low side capillary length, 1 to 20 ft (increments of 1)
Options											FP GB IS MT NIST SB ST	ATEX/IECEx flameproof 2″ galvanized steel mounting bracket ATEX/IECEx intrinsically safe SS tag plate mounted on wire NIST traceable calibration certificate 2″ SS mounting bracket SS plate riveted to the housing

ACCESSORIES

Model	Description	Model	Description
A-630	SS angle type bracket with SS bolts	**BBV-0N**	2-valve block manifold
A-631	SS flat type bracket with SS bolts	**DevCom2000**	HART® communication protocol software

HART® is a registered trademark of Fieldcomm Group, Inc.

Dwyer

SERIES 3100D

EXPLOSION-PROOF DIFFERENTIAL PRESSURE TRANSMITTER

HART®, Push-Button Configuration, Rangeability (100:1)

CALIBRATION SERVICES AVAILABLE

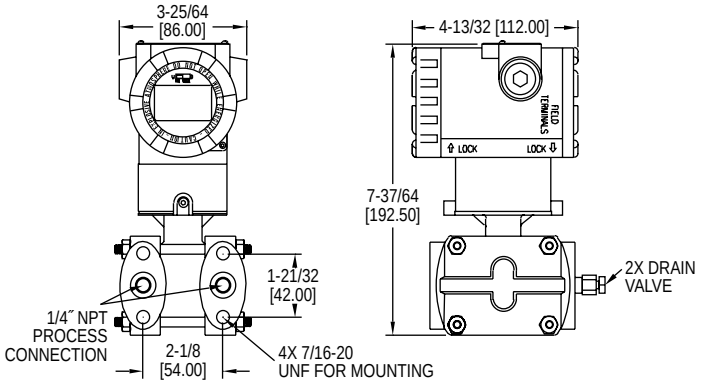

Mercoid® **Series 3100D Explosion-Proof Smart Pressure Transmitter** is a microprocessor-based high performance transmitter, which has flexible pressure calibration, push-button configuration, and programmable using HART® Communication. The Series 3100D is capable of being configured for differential pressure or level applications with the zero and span buttons. A field calibrator is not required for configuration. The transmitter software compensates for thermal effects, improving performance. EEPROM stores configuration settings and stores sensor correction coefficients in the event of shutdowns or power loss.
The Series 3100D is FM approved for use in hazardous (classified) locations. The 100:1 rangeability allows the smart transmitter to be configured to fit any application.

BENEFITS/FEATURES

- Configurable using zero/span buttons means no calibrator required reducing time to install and running
- Range-ability and selectable engineering units, allows transmitter to fit many applications reducing the number of different transmitters to meet specifications
- High accuracy (±0.075%) provides exceptional measurement for ensuring tight-control and minimizing costly out of specification conditions
- Automatic sensor temperature compensation improves performance of device for accurate measurement under different operating environments
- Fail-mode process function stores configuration settings in the event of shutdown or power-loss provides for faster restart to getting application back on-line
- A HART® Communication programmable device provides a reliable, long-term solution for plant operators who seek the benefits of intelligent devices with digital communication

APPLICATIONS

- Flow measurement
- Level monitoring
- Filter or pump differential pressure
- Critical process monitoring

SPECIFICATIONS

Service: Compatible gases, steam, liquids or vapors.
Wetted Materials: 316L SS, fluoroelastomer.
Accuracy: ±0.075% FS (@ 20°C).
Rangeability: 100:1 turn down (0 to 6 in w.c. range is 20:1 turn down).
Stability: ±0.125% FSO/yr.
Temperature Limits: Process: -40 to 248°F (-40 to 120°C); Ambient: Without LCD: -40 to 185°F (-40 to 85°C); With LCD: -22 to 176°F (-30 to 80°C).
Pressure Limits: Max pressure: Range: -14.5 to 2000 psi; Burst pressure: 10000 psi.
Thermal Effect: ±0.125% span/32°C.
Power Requirements: 11.9-45 VDC.
Output Signal: 4-20 mA / HART® Communication.
Response Time: 0.12 s.
Damping Time: 0.25 to 60 s.
Loop Resistance: Operation: 0 to 1500 Ω; HART® Communication: 250 to 500 Ω.
Electrical Connection: Two 1/2″ female NPT conduit, screw terminal.
Process Connection: 1/4″ female NPT.
Display: Optional 5 digit LCD.
Enclosure Rating: NEMA 4X (IP66) and explosion-proof for Class I, Div I, Groups A, B, C and D.
Weight: 8.6 lb (3.9 kg).
Compliance: CE, FM.

MODEL CHART

Model	Calibrated Span (Min. to Max.)		Lower Range Limit		Upper Range Limit		LCD Display
3100D-2-FM-1-1	0.6 to 30 in w.c.	0.15 to 7.5 kPa	-30 in w.c.	-7.5 kPa	30 in w.c.	7.5 kPa	No
3100D-3-FM-1-1	1.5 to 150 in w.c.	0.373 to 37.3 kPa	-150 in w.c.	-37.3 kPa	150 in w.c.	37.3 kPa	No
3100D-4-FM-1-1	7.5 to 750 in w.c.	1.865 to 186.5 kPa	-750 in w.c.	-186.5 kPa	750 in w.c.	186.5 kPa	No
3100D-5-FM-1-1	1 to 100 psi	6.9 to 690 kPa	-100 psi	-690 kPa	100 psi	690 kPa	No
3100D-6-FM-1-1	3 to 300 psi	20.68 to 2068 kPa	-300 psi	-2068 kPa	300 psi	2068 kPa	No
3100D-2-FM-1-1-LCD	0.6 to 30 in w.c.	0.15 to 7.5 kPa	-30 in w.c.	-7.5 kPa	30 in w.c.	7.5 kPa	Yes
3100D-3-FM-1-1-LCD	1.5 to 150 in w.c.	0.373 to 37.3 kPa	-150 in w.c.	-37.3 kPa	150 in w.c.	37.3 kPa	Yes
3100D-4-FM-1-1-LCD	7.5 to 750 in w.c.	1.865 to 186.5 kPa	-750 in w.c.	-186.5 kPa	750 in w.c.	186.5 kPa	Yes
3100D-5-FM-1-1-LCD	1 to 100 psi	6.9 to 690 kPa	-100 psi	-690 kPa	100 psi	690 kPa	Yes
3100D-6-FM-1-1-LCD	3 to 300 psi	20.68 to 2068 kPa	-300 psi	-2068 kPa	300 psi	2068 kPa	Yes

Note: Consult factory for custom calibration.

Dwyer
SERIES 3100D

EXPLOSION-PROOF DIFFERENTIAL PRESSURE TRANSMITTER

HART®, Push-Button Configuration, Rangeability (100:1)

CALIBRATION SERVICES AVAILABLE

MODEL CHART															
Example	**3100D**	**-2**	**-FM**	**-3**	**-1**	**-LEC**	**S2**	**A1**	**05**	**S**	**2**	**-05**	**-10**	**-LCD**	**3100D-2-FM-3-1-LECS2A105S2-05-10-LCD**
Series	3100D														Explosion-proof differential pressure transmitter
Range		1 2 3 4 5 6 7													0 to 6 in w.c. 0 to 30 in w.c. 0 to 150 in w.c. 0 to 750 in w.c. 0 to 100 psi 0 to 300 psi 0 to 1000 psi
Approval			FM WP												FM approved Weatherproof only (only available with 316 SS housing)
Process Connection				1 3											1/4″ female NPT Diaphragm seal
Electrical Connection					1										1/2″ female NPT
Diaphragm Seal Type						LEC LED LEH LEL LFC LFD LFH LFL									2 extended diaphragm seals capillary type 1 extended diaphragm seal direct mount high side 1 extended diaphragm seal capillary type high side 1 extended diaphragm seal capillary type low side 2 flush diaphragm seals capillary type 1 flush diaphragm seal direct mount high side 1 flush diaphragm seal capillary type high side 1 flush diaphragm seal capillary type low side
Mounting Flange							S2 S3								2″ (50 mm) 316L SS 3″ (80 mm) 316L SS
Mounting Flange Rating								A1 A2 D1 D2 J1 J2							ANSI class 150# ANSI class 300# DIN PN 10/16 DIN PN 25/40 JIS 10 K JIS 20 K
Extension Length									00 05 10 15						No extension [standard for flush mount] 2″ extension 4″ extension 6″ extension
Diaphragm Material										S P H T					316L SS diaphragm PTFE and 316L SS diaphragm Hastelloy C-276 diaphragm Tantallum diaphragm
Fill Fluid											2				Silicon oil (-40 to 400°F)
Capillary Length High Side												XX			0 to 20 feet
Capillary Length Low Side													XX		0 to 20 feet
Options														CC LCD NIST SSH	Custom calibration 5 digit LCD NIST calibration 316 SS housing (Only available with WP approval)

CUSTOM CALIBRATION VALUES	
Primary Units	in w.c., ft in w.c., mm in w.c., in Hg, psig, g/cm^2 , kg/cm^2, MPa, Pa, kPa, bar, mbar, Torr, Atm, mm Hg
Upper Range Limit	20 mA value
Lower Range Limit	4 mA value
Output	Linear or square root
Damping Time	0 to 60 seconds
Display Mode	Unit, %, mA, rotate
Display Units	Primary unit or Engineering unit
Engineering Units*	**Volumetric Flow Units** US gal/s, US gpm, US gal/hr, US gpd, imp gal/s, imp gpm, imp gal/hr, imp gpd, l/s, l/min, l/hour, ft/s, m/s, metric gal/day, metric l/day, ft^3/s, ft^3/min, ft^3/h, ft^3/day, m^3/s, m^3/min, m^3/hr, m^3/day, normal l/hr, normal m^3/hr, standard ft^3/min, barrels/s, barrels/min, barrels/hr, barrels/day **Mass Flow Units** g/s, g/min, g/hr, kg/s, kg/min, kg/hr, kg/day, metric ton/min, metric ton/hour, metric ton/day, lb/s, lb/min, lb/hr, lb/day, short ton/min, short ton/hr, short ton/day, long ton/hr, long ton/day **Volume Units** gallons, liters, imp gallons, m^3, barrels, bushels, yd^3, ft^3, in^3, bbl liq, normal cubic meter, normal liter, standard cubic feet, hectoliters
Engr. Upper Range Limit*	Engr. upper value
Engr. Lower Range Limit*	Engr. lower value
Engr Function*	Linear or square root

*Engineering Units, Engr. Upper Range Limit, Engr. Lower Range Limit and Engr. Function values are only required if engineering unit is selected.

ACCESSORIES	
Model	**Description**
A-630	Stainless steel angle type bracket with SS bolts
A-631	Stainless steel flat type bracket with SS bolts
BBV-1F	Flanged 3-valve block manifold
BBV-22F	Flanged 5-valve block manifold
DevCom2000	HART® communication protocol software

HART® is a registered trademark of Fieldcomm Group, Inc.

Dwyer
SERIES 608

FM APPROVED

INTRINSICALLY SAFE DIFFERENTIAL PRESSURE TRANSMITTER

Ranges Down to 0.1 in w.c., FM Approved, NEMA 4X

CALIBRATION SERVICES AVAILABLE

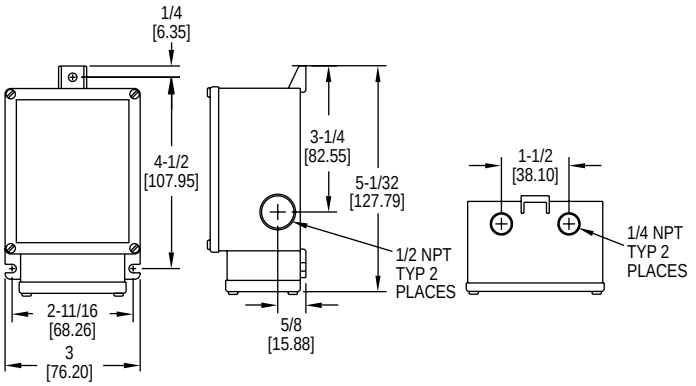

The Dwyer® **Series 608 Intrinsically Safe Differential Pressure Transmitter** converts positive, negative (vacuum), or differential pressures of clean, dry air or other non-conductive, non-corrosive gases into a standard 2-wire, 4-20 mA output signal. The use of an ultra-thin silicon diaphragm enables precision measurement of differential pressures as low as 0.1 in w.c. while withstanding high static working pressures up to 100 psig (6.89 bar). The Series 608 transmitters are FM approved intrinsically safe for use in the specified hazardous locations when used with an approved intrinsic safety barrier. The rugged NEMA 4X (IP65), stainless steel housing makes this transmitter ideal for use in industrial and process plant environments.

BENEFITS/FEATURES

- High accuracy at low pressure ranges provides exceptional measurement for ensuring tight-control and minimizing costly out of specification conditions
- Intrinsically safe for use in the specified hazardous locations meets specifications where pressure transmission and safety cannot be compromised
- NEMA 4X rated enclosure provides protection in harsh environments permitting outdoor monitoring or in areas where dust and particulate matter exists

APPLICATIONS

- Lab fume hood control
- Clean room applications
- Flow measurements and control
- Filter monitoring
- Furnace draft measurement
- Process control

SPECIFICATIONS

Service: Clean/dry air and compatible gases. Clean dry air/gases compatible with aluminum, titanium, PBT, buna, silicone, glass, gold, silicone RTV and stainless steel. Not for use with liquids.
Wetted Materials: Consult factory.
Accuracy: ±0.5% or ±0.25% full scale.
Stability: ±0.5% F.S./year.
Pressure Limits: 100 psig (6.89 bar); 15 psid (1.03 bar).
Temperature Limits: -20 to 185°F (-28 to 85°C).
Compensated Temperature Range: 0 to 160°F (-18 to 71°C).
Thermal Effect: 0.5% Accuracy: ±0.02% F.S./°F; 0.25% Accuracy: ±0.01% F.S./°F.
Power Requirements: 12-36 VDC (2-wire).
Output Signal: 4-20 mA DC.
Zero and Span Adustments: Potentiometers for zero and span.
Response Time: 250 ms.
Loop Resistance: DC: 0-1045 Ωs maximum.
Electrical Connections: Screw terminal: Two 1/2″ female NPT conduit.
Process Connections: Two 1/4″ female NPT.
Enclosure Rating: NEMA 4X (IP65).
Mounting Orientation: Not position sensitive.
Weight: 2 lb (0.9 kg).
Agency Approvals: FM approved intrinsically safe for use in Class I, Div. 1, Groups A, B, C, D; Class II, Div. 1, Groups E, F, G; Class III, Div. 1 when wired with approved intrinsically safe barrier. Entity parameters: Vmax= 36 VDC; Imax= 250 mA; CI=12 nF; LI=0 mH.

MODEL CHART

Model	Range (in w.c.)
608-02	0 to 0.5
608-03	0 to 1.0
608-04	0 to 2.0
608-05	0 to 5.0
608-06	0 to 10.0
608-07	0 to 25.0
608-01B	0 to ±0.25
608-13B*	0 to ±1.0
608-04B	0 to ±2.0

*Models have a ±0.25% FS accuracy.

OPTIONS

Use order code:	Description
NISTCAL-PT1	NIST traceable calibration certificate

Note: New units include data report/calibration report. NIST can be provided for an additional fee.

ACCESSORIES

Model	Description
MTL5541	Intrinsically safe galvanic isolator
MTL7706	Intrinsically safe zener barrier

Static Fitting Options: See page 452 (Static Pressure Tips)
Process Tubing Options: See page 453 (Gage Tubing Accessories)

Dwyer

SERIES 636D

FIXED RANGE DIFFERENTIAL PRESSURE TRANSMITTER

Explosion-Proof, 0.5% Accuracy

CALIBRATION SERVICES AVAILABLE

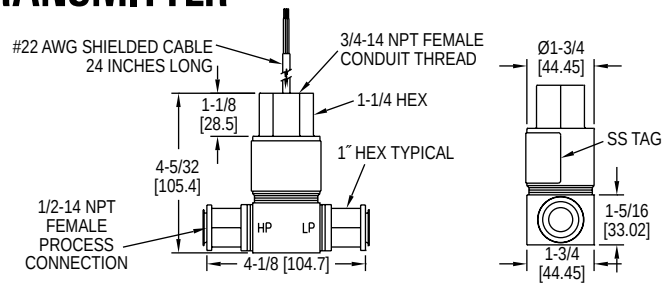

Series 636D Fixed Range Differential Pressure Transmitter can be used for measuring pressures of liquids, gases & vapors. All available ranges have an excellent 0.5% FS accuracy with a 4-20 mA Output standard or optional 1-5 VDC output. The NEMA 4 housing is an all 316 welded construction that is designed to withstand the harshest environmental conditions. With all 316L wetted materials, this transmitter is compatible with most media. These units are CSA approved explosion-proof for use in the specified hazardous locations and meet NACE standards for off-shore applications.

BENEFITS/FEATURES

- NEMA 4X rated enclosure provides protection in harsh environments permitting outdoor monitoring or in areas where dust and particulate matter exists
- Explosion-proof device for use in hazardous areas
- Versatile, high-accuracy device for liquid or gas supports designs requiring more precise measurements in support of application

APPLICATIONS

- Pump differential pressure
- Critical process monitoring
- Off shore applications

MODEL CHART

Model 4-20 mA Out	Range	Model 1-5 VDC Out	Range
636D-0	0 to 6 psid	**636D-0-LP**	0 to 6 psid
636D-1	0 to 15 psid	**636D-1-LP**	0 to 15 psid
636D-2	0 to 30 psid	**636D-2-LP**	0 to 30 psid
636D-3	0 to 60 psid	**636D-3-LP**	0 to 60 psid
636D-4	0 to 100 psid	**636D-4-LP**	0 to 100 psid
636D-5	0 to 150 psid	**636D-5-LP**	0 to 150 psid
636D-6	0 to 200 psid	**636D-6-LP**	0 to 200 psid
636D-7	0 to 300 psid	**636D-7-LP**	0 to 300 psid
636D-8	0 to 500 psid	**636D-8-LP**	0 to 500 psid

SPECIFICATIONS

Service: Compatible gases, liquids, or vapors.
Wetted Materials: Types 316L SS.
Accuracy: BFSL: ±0.5% FS (includes linearity, hysteresis, and repeatability).
Stability: ±1.0 FS/yr.
Pressure Limits: 3 x FS differential pressure; Burst: 2500 psig.
Temperature Limits: Ambient operating: -40 to 140°F (-40 to 60°C); Process interface: -40 to 212°F (-40 to 100°C); Storage: -40 to 212°F (-40 to 100°C).
Compensated Temperature Range: -20 to 160°F (-29 to 71°C).
Thermal Effect: ±2% FS/50°F (reference to 77°F).
Power Requirements: 12-30 VDC for 4-20 mA outputs; 8-14 VDC for 1-5 VDC outputs, both with reverse polarity protection.
Output Signal: 4-20 mA DC or 1-5 VDC.
Zero and Span Adjustment: Fixed.
Response Time: 20 ms.
Loop Resistance: 900 Ω max @ 30 VDC for current outputs. For voltage outputs, minimum lead resistance 50k ohms.
Current Consumption: 4-20 mA for current output models; 3 mA for voltage output models.
Electrical Connections: 2 ft, 22 AWG cable; 3/4″ female NPT conduit.
Process Connections: Two 1/2″ female NPT.
Enclosure Rating: NEMA 4 (IP56).
Mounting Orientation: ±0.05 psi/90° rotation from horizontal.
Weight: 1.8 lb (0.82 kg).
Agency Approvals: CSA approved explosion-proof for Class I, Division 1, Groups B, C, and D; Class II, Groups E, F, and G; Class III.

OPTIONS

Use order code:	Description
NISTCAL-PT1	NIST traceable calibration certificate

SERIES 655A

316 WET/WET DIFFERENTIAL PRESSURE TRANSMITTER

Ranges Down to 3 in w.c., 6-Point NIST Certificate Included

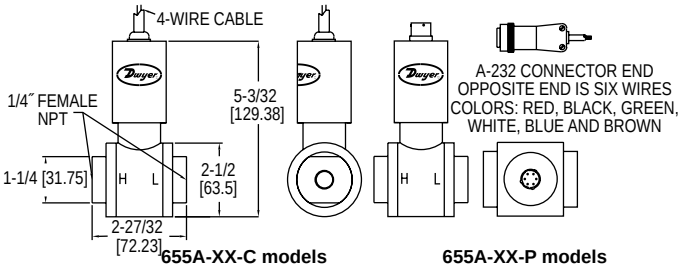

The **Series 655A 316 Wet/Wet Differential Pressure Transmitter** is designed for high static/low DP applications designed especially for the End Users and OEM's where extreme overpressure and high performance of 0.25% accuracy and stability are required at ranges down to 3 in w.c. Each unit includes a 6-point NIST certificate of calibration which demonstrates the unit's high level of performance.

BENEFITS/FEATURES

- Extreme overpressure and stability at low ranges provides durable device for OEM and end-user applications
- High-accuracy device for low differential pressure designs requiring more precise measurements in support of application
- NIST certificate available to demonstrate high-level of performance

APPLICATIONS

- Pump differential pressure
- Critical process monitoring
- High accuracy/low differential pressure OEM applications

MODEL CHART

Model	Range	Model	Range
655A-00-C	0 to 3 in w.c.	**655A-00-P**	0 to 3 in w.c.
655A-01-C	0 to 5 in w.c.	**655A-01-P**	0 to 5 in w.c.
655A-02-C	0 to 8 in w.c.	**655A-02-P**	0 to 8 in w.c.
655A-03-C	0 to 10 in w.c.	**655A-03-P**	0 to 10 in w.c.
655A-04-C	0 to 15 in w.c.	**655A-04-P**	0 to 15 in w.c.
655A-05-C	0 to 20 in w.c.	**655A-05-P**	0 to 20 in w.c.
655A-06-C	0 to 1 psid	**655A-06-P**	0 to 1 psid
655A-07-C	0 to 2 psid	**655A-07-P**	0 to 2 psid

Note: Change 'C' to 'P' for optional 6 pin male connection.

SPECIFICATIONS

Service: Compatible gases or liquids.
Wetted Materials: 316L SS.
Accuracy: ±0.25% BFSL, RSS (combined effect of non-linearity, hysteresis, and repeatability).
Stability: ≤ ±0.25% FSO/yr.
Temperature Limits: -20 to 200°F (-29 to 93°C).
Compensated Temperature Limits: 0 to 170°F (-17.8 to 76.7°C).
Pressure Limits: 1000 psi (68.95 bar) continuous; 3000 psi (206.8 bar) burst.
Thermal Effects: ≤ ±1.5% FS oven comp. temperature range.
Power Requirements: 8-38 VDC.
Output Signal: 4-20 mA.
Static Pressure Effects: On zero: ≤ ±0.25% FSO per 1000 psi; on span: ≤ ±0.5% of reading per 1000 psi.
Response Time: < 10 ms.
Loop Resistance: 1500 Ω.
Electrical Connections: Cable exit with 24″ cable; optional 6-pin connector.
Process Connections: 1/4″ NPT female.
Enclosure Rating: Designed to meet NEMA 4X (IP66).
Mounting Orientation: Mount in vertical position: zero shifts up to ±1 in w.c. depending on orientation.
Weight: 18 oz (510 g).

ACCESSORIES

Model	Description
A-232	Connection with cable (3´); for 6 pin connection models

Dwyer

SERIES 629C

WET/WET DIFFERENTIAL PRESSURE TRANSMITTERS

0.5% Accuracy, NEMA 4X (IP66) Enclosure

CALIBRATION SERVICES AVAILABLE

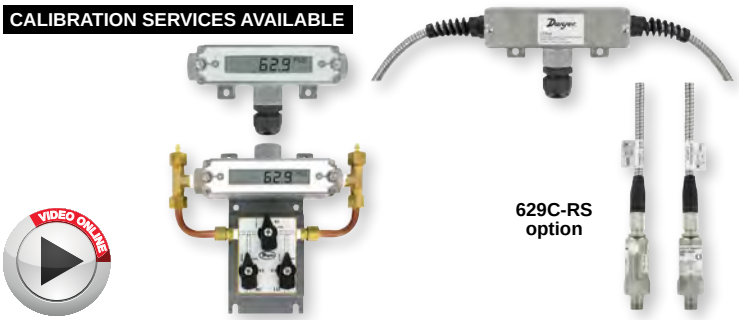

Conduit housing with remote sensor available in 10´ or 20´ shielded or armored cable

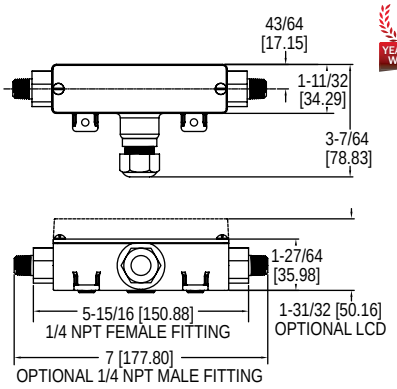

The **Series 629C Wet/Wet Differential Pressure Transmitters** monitor differential pressure of air and compatible gases and liquids with 0.5% accuracy. The design employs dual pressure sensors converting pressure changes into a standard 4-20 mA output signal or field selectable voltage. Small internal volume and minimal moving parts result in exceptional response and reliability. The terminal block, as well as a zero adjustment button, are easily accessed under the top cover. The Series 629C Differential Pressure Transmitter is designed to meet NEMA 4X (IP66) construction.

BENEFITS/FEATURES

- Powered by either DC or AC - take advantage of most readily available power source reducing installation costs
- Optional LCD does not need a separate power supply - lowers installed cost
- Selectable voltage range - provides flexible choice for changing design or inputs for process/HVAC controllers being used to monitor and control
- Push-button zero (versus trim pot) - more simple zeroing provides easy install and calibration reducing installation time and possibility of operator error
- Optional LCD indicator provides local status to identify operational condition
- Remote sensor option reduces installation labor and material

APPLICATIONS

- Flow elements
- Heat exchangers
- Filters
- Coils
- Chiller
- Pumps

SPECIFICATIONS

Service: Compatible gases and liquids.
Wetted Materials: Without valve: 316, 316L SS. Additional wetted parts with valve option: Buna-N, silicone grease, PTFE, brass 360, copper, and reinforced copolymer.
Accuracy: ±0.5% FS (includes linearity, hysteresis and repeatability).
Stability: ±1% FS/year.
Temperature Limits: 0 to 200°F (-18 to 93°C).
Compensated Temperature Limits: 0 to 175°F (-18 to 79°C).
Pressure Limits: See range table.
Thermal Effects: Avg 0.04%/°F (0.072%/°C) (includes zero and span).
Power Requirements: 2-wire: 10-35 VDC; 3-wire: 13-35 VDC or isolated 16-33 VAC (reverse polarity protected).
Output Signal: 2-wire: 4-20 mA; 3-wire: Field selectable 0-5, 1-5, 0-10, or 2-10 VDC.
Zero and Units: Push-buttons inside conduit enclosure.
Response Time: 400 msec.
Loop Resistance: Current output: 0 to 1250 Ω (max), Rmax = 50(Vps-10); Voltage output: Minimum load resistance = 5 kΩ.
Current Consumption: 28 mA (max).
Electrical Connections: Removable terminal block; 1/2˝ female NPT conduit.
Process Connections: 1/4˝ female or male NPT.
Display: Optional 4-1/2 digit LCD field attachable display.
Enclosure Rating: Designed to meet NEMA 4X (-RS maintains NEMA 4X on sensors and housing).
Mounting Orientation: Not position sensitive.
Weight: 629C-XX-CH: 10.1 oz (286 g); 629C-XX-R2-P1-E5-XX: 2.3 lbs (1.04 kg); 629C-XX-R6-P1-E5-XX: 4.55 lbs (2.06 kg).
Compliance: CE.

MODEL CHART

Example	629C	-01	-CH	-P1	-E1	-S1	-3V	629C-01-CH-P1-E1-S1-3V
Series	629C							Wet/wet differential pressure transmitter
Range		01						0 to 5 psid
		02						0 to 10 psid
		03						0 to 25 psid
		04						0 to 50 psid
		05						0 to 100 psid
		06						0 to 150 psid
		07						0 to 200 psid
		08						0 to 300 psid
		09						0 to 500 psid
		11						0 to 0.5 bar differential
		12						0 to 1 bar differential
		13						0 to 2 bar differential
		14						0 to 4 bar differential
		15						0 to 6 bar differential
		16						0 to 10 bar differential
		17						0 to 15 bar differential
		18						0 to 20 bar differential
		19						0 to 30 bar differential
Housing			CH					Conduit housing, NEMA 4X (IP66)
			R1					Conduit housing, NEMA 4X (IP66) with remote sensor and 10´ shielded cable
			R2					Conduit housing, NEMA 4X (IP66) with remote sensor and 20´ shielded cable
			R5					Conduit housing, NEMA 4X (IP66) with remote sensor and 10´ armored cable
			R6					Conduit housing, NEMA 4X (IP66) with remote sensor and 20´ armored cable
Process Connection				P1				1/4˝ male NPT
				P2				1/4˝ female NPT
				P3				1/4˝ male BSPT
				P4				1/4˝ female BSPT
Electrical Connection					E1			Cable gland with 3´ of prewired cable
					E2			Cable gland with 6´ of prewired cable
					E3			Cable gland with 9´ of prewired cable
					E5			1/2˝ female NPT conduit
					E9			M-12 4 pin connector
Signal Output						S1		4-20 mA
						S3		Field selectable 0-5, 1-5, 0-10, 2-10 VDC
Options							3V	3-way valve
							AT	Aluminum tag
							FC	Factory calibration certificate
							LCD	LCD indication
							NIST	NIST traceable certificate

Note: -3V option is only available with -P2 process connection.

RANGE

Range Number	Range	Working Pressure*	Over Pressure
01	0 to 5 psid	10 psi	50 psi
02	0 to 10 psid	20 psi	50 psi
03	0 to 25 psid	50 psi	120 psi
04	0 to 50 psid	100 psi	250 psi
05	0 to 100 psid	200 psi	500 psi
06	0 to 150 psid	300 psi	750 psi
07	0 to 200 psid	400 psi	1000 psi
08	0 to 300 psid	600 psi	1200 psi
09	0 to 500 psid	1000 psi	2000 psi
11	0 to 0.5 bar differential	1 bar	3 bar
12	0 to 1 bar differential	2 bar	8 bar
13	0 to 2 bar differential	4 bar	8 bar
14	0 to 4 bar differential	8 bar	18 bar
15	0 to 6 bar differential	12 bar	18 bar
16	0 to 10 bar differential	20 bar	50 bar
17	0 to 15 bar differential	30 bar	60 bar
18	0 to 20 bar differential	40 bar	80 bar
19	0 to 30 bar differential	60 bar	120 bar

*Pressures exceeding the working pressure limit may cause a calibration shift of up to ±3% of full-scale.

Note: Over pressure of all models with 3-way valve is 100 psi.

ACCESSORIES

Model	Description
A-155	Cable gland with 1/2˝ NPT male
A-228	12˝ SS flex hose
A-62X-LCD	Field-upgradeable LCD
BBV-1B	Mini SS 3-valve block manifold

USA: California Proposition 65
WARNING: This product can expose you to chemicals including Lead, which is known to the State of California to cause cancer and birth defects or other reproductive harm. For more information go to www.P65Warnings.ca.gov.

DIFFERENTIAL PRESSURE TRANSMITTERS

High Accuracy, IP65 Enclosure

CALIBRATION SERVICES AVAILABLE

Shown with -3V 3-way valve option

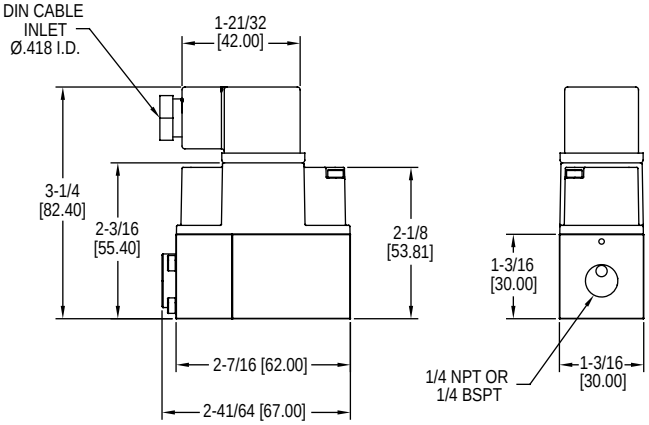

The **Series 629HLP Differential Pressure Transmitters** are suitable for measuring over-pressure, under-pressure, and differential pressure in compatible gases and liquids with 1% accuracy. The 629HLP is suitable for all measuring tasks in commercial, industrial or sanitary applications. Its single sensor design, allows it to measure small increment pressure changes, and converts them to a linear analog output signal from 4-20 mA or 0-10 VDC.

BENEFITS/FEATURES

- Rugged, versatile, high accuracy device
- For liquid or gas systems requiring precise measurements
- Provide excellent response and reliability
- Suitable for static and dynamic measurements
- Converts pressure changes into 4-20 mA or 0-10 VDC output
- Compact, lightweight, capable to be installed in any arrangement making installation very simple

APPLICATIONS

- Heat exchangers
- Fan coils/air handlers
- Core testing applications
- Hydraulic systems
- High line pressures/low DP
- Pumps
- Commercial/industrial processes
- Sanitary process

SPECIFICATIONS

Service: Compatible gases or liquids.
Wetted Material: 304 SS, EPDM, silicone grease, alumina ceramic; Optional 3-way valve: Brass, copper, nylon, HNBR, FKM, NBR.
Housing Material: ABS.
Enclosure Rating: IP65.
Accuracy: ±1% from -5 to 60°C (23 to 140°F).
Stability: ±1% FS/year.
Temperature Limits: Ambient: -10 to 60°C (14 to 122°F); Process: -10 to 80°C (14 to 176°F).
Relative Humidity: 10% to 90% non-condensing.
Installation Position: Not position sensitive.
Pressure Limits: See pressure range limits chart.
Burst Pressure: See pressure range limits chart.
Static Pressure Limits: See pressure range limits chart.
Output Signal: 4-20 mA, 0-10 VDC.
Response Time: 50 ms.
Rated Supply Voltage: 0-10 VDC output: 12-36 VDC or 12-32 VAC (@ max load of 2 kΩ) 4-20 mA output: 8-36 VDC.
Max Loop Resistance: (Supply voltage – 8 V) / 0.02 for 4-20 mA output.
Power Consumption: V_{out} = 13 mA max, I_{out} = 24 mA max.
Electrical Connections: Form A DIN 43650.
Process Connections: Standard: 1/4″ female NPT, 1/4″ female BSPT. With 3-way valve option: 1/8″ female NPT, 1/8″ female BSPT.
Weight: 1 lb 4 oz (567 g).
Approvals: CE, RCM.

MODEL CHART

Example	629HLP	-01	-P2	-S1	-FC	629HLP-01-P2-S1-FC
Series	629HLP					Differential pressure transmitter
Range		01				0 to 1 bar
		02				0 to 2.5 bar
		04				0 to 4 bar
		06				0 to 6 bar
		15				0 to 15 psi
		30				0 to 30 psi
		60				0 to 60 psi
		90				0 to 90 psi
Process Connections			P2			1/4″ female NPT
			P4			1/4″ female BPST
Output Signal				S1		4-20 mA
				S5		0-10 VDC
Options					FC	Factory calibration
					NIST	NIST certificate
					3V	3-way valve

Note: Psi ranges available upon request. Contact factory for details.

PRESSURE RANGE LIMITS

Pressure Range	Maximum Static Pressure (bars)	*Maximum Differential Over Pressure	**Burst Differential Pressure
0 to 1 bar	25 bar	5 bar	8 bar
0 to 2.5 bar	25 bar	5 bar	8 bar
0 to 4 bar	25 bar	12 bar	18 bar
0 to 6 bar	25 bar	12 bar	18 bar
0 to 15 psi	360 psi	70 psi	115 psi
0 to 30 psi	360 psi	70 psi	115 psi
0 to 60 psi	360 psi	174 psi	260 psi
0 to 90 psi	360 psi	174 psi	260 psi

*The differential pressure limit, between high and low ports, that the transmitter can withstand without affecting transmitter performance.
**Differential pressures between high and low ports that exceed overpressure limits will result in permanent diaphragm deformation, and any pressure higher than the burst pressure limits will rupture the diaphragm.

ACCESSORIES

Model	Description
A-228	12″ SS flex hose
A-629HLP-BKT	Mounting bracket kit
BBV-1B	3-valve block manifold

USA: California Proposition 65
WARNING: This product can expose you to chemicals including Lead, which is known to the State of California to cause cancer and birth defects or other reproductive harm. For more information go to www.P65Warnings.ca.gov.

Dwyer

SERIES 647

WET/WET DIFFERENTIAL PRESSURE TRANSMITTER

±1.0% Accuracy, NEMA 4 (IP56) Enclosure, 2-Wire

CALIBRATION SERVICES AVAILABLE

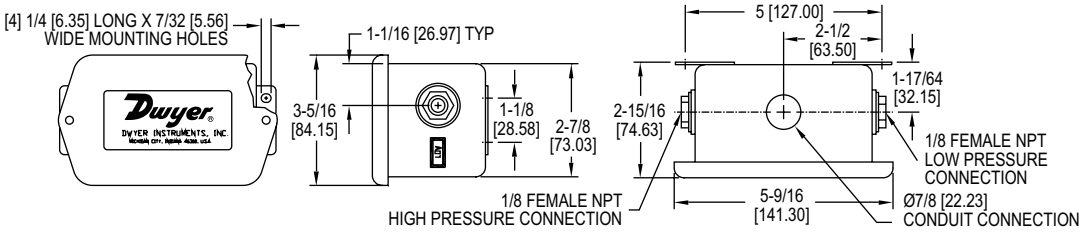

Monitor differential pressure in air/liquid flow systems, HVAC automation, pneumatic systems and process control with the **Series 647 Wet/Wet Differential Pressure Transmitter**. Units are temperature compensated and provide a 4-20 mA output signal which can be interfaced with chart recorders, data loggers and computerized monitoring and control systems.

BENEFITS/FEATURES
- Versatile for liquid or gas supports designs requiring more precise measurements in support of application
- Temperature compensated improves performance of device for accurate measurement under different operating environments
- Output signal provides capability to interface with automation systems to centralize monitoring

APPLICATIONS
- Flow
- HVAC automation
- Process control
- Pneumatic systems

MODEL CHART	
Model	**Range**
647-0	0 to 1 in w.c.
647-1	0 to 3 in w.c.
647-2	0 to 25 in w.c.
647-3	0 to 5 in w.c.
647-4	0 to 10 in w.c.

SPECIFICATIONS

Service: Compatible gases or liquids on both pressure and reference sides.
Wetted Materials: Brass, vinyl, glass-filled polyester, silicon, and fluorosilicone.
Accuracy: ±1.0% FS.
Stability: ±1.5% FS output/year.
Temperature Limits: 32 to 122°F (0 to 50°C).
Pressure Limits: Ranges 1 in w.c. to 5 psi: 20 psi, 15 psi range: 45 psi, 30 psi range: 60 psi.
Thermal Effects: Zero: ±0.05% FS/°F; Span: ±0.05% rdg/°F.
Power Requirements: 18-30 VDC.
Output Signal: 4-20 mA, 2-wire.
Zero and Span Adjustments: Adjustable, ±10%.
Loop Resistance: 400Ω @ 18 VDC, 600Ω @ 24 VDC, 1000Ω @ 30 VDC.
Electrical Connection: Screw terminals, reverse polarity protected.
Process Connections: Two 1/8″ female NPT.
Housing: Gasketed steel epoxy painted, NEMA 4 (IP56).
Weight: 14 oz (397 g).

OPTIONS	
Use order code:	**Description**
NISTCAL-PT1	NIST traceable calibration certificate

USA: California Proposition 65
⚠**WARNING:** This product can expose you to chemicals including Lead, which is known to the State of California to cause cancer and birth defects or other reproductive harm. For more information go to www.P65Warnings.ca.gov.

SERIES 645

WET/WET DIFFERENTIAL PRESSURE TRANSMITTERS

±0.25% Accuracy, Quick Response, 2-Wire Design

CALIBRATION SERVICES AVAILABLE

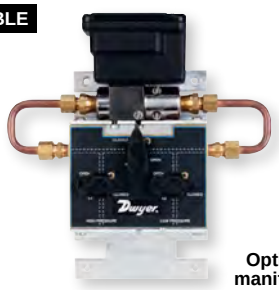

Optional 3-valve manifold assembly

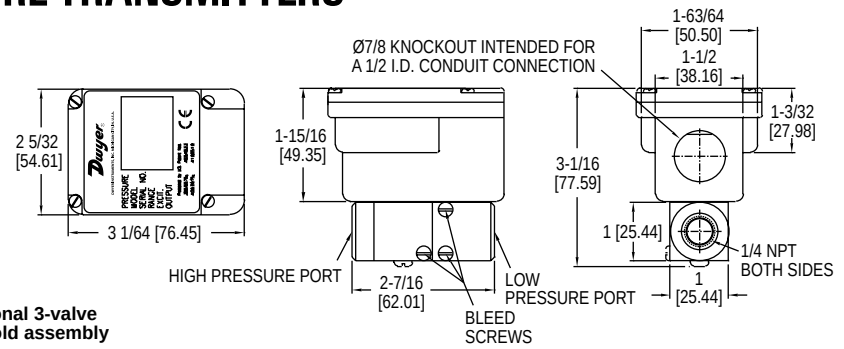

Series 645 Wet/Wet Differential Pressure Transmitters are designed for use with compatible gases and liquids which can be applied to both the pressure and reference ports. Quick response capacitance sensor delivers a 4-20 mA output signal proportional to differential pressure with ±.25% accuracy. The Series 645 transmitters are ideal for process control, filter condition monitoring, refrigeration equipment, pump speed control, HVAC equipment, and liquid level measurement. For ease of installation and maintenance, order optional 3-valve manifold assembly. Bleed ports allow for total elimination of air in the line and pressure cavities.

BENEFITS/FEATURES
- Versatile, high-accuracy device for liquid or gas supports designs requiring more precise measurements in support of application
- Optional 3-way valve manifold supports simplifying installation or removal of transmitter without interrupting process

APPLICATIONS
- Process control
- Refrigeration equipment
- HVAC equipment
- Filter monitoring
- Pump speed control
- Liquid level measurement

MODEL CHART	
Model	**Range**
645-0	0 to 1 psid
645-1	0 to 2 psid
645-2	0 to 5 psid
645-3	0 to 10 psid
645-4	0 to 25 psid
645-5	0 to 50 psid
645-6	0 to 100 psid
Note: For optional 3-valve manifold assembly, add -3V to end of model number.	

SPECIFICATIONS

Service: Compatible gases or liquids on both pressure and reference sides.
Wetted Materials: 17-4 PH stainless steel, 300 Series stainless steel, fluoroelastomer and silicone O-rings and bleed screw seals.
Accuracy: ±0.25% FS (RSS).
Temperature Limits: Operating: 0 to 175°F (-22 to 80°C); Storage: -65 to 260°F (-54 to 126°C).
Pressure Limits: (High side) 1 to 5 psi: 20 x FS, 10 to 25 psi: 10 x FS, 50 psi: 5 x FS, 100 psi: 2.5 x FS; (low side) 2.5 x FS.
Thermal Effects: (includes zero and span) ±0.02% FS/°F, 30 to 150°F (-1 to 65°C).
Power Requirements: 11-30 VDC.
Output Signal: 4-20 mA, 2-wire.
Zero and Span Adjustments: Adjustable, ±1 mA, non-interactive.
Response Time: 30 to 50 ms.
Loop Resistance: 0 to 1000Ω.
Electrical Connection: Barrier strip terminal block with conduit enclosure and .875″ (22 mm) diameter conduit opening.
Process Connection: 1/4″-18 female NPT.
Housing: Stainless steel/aluminum, NEMA 4X (IP56).
Weight: 14.4 oz (0.4 kg).
Compliance: CE.

3-VALVE MANIFOLD ASSEMBLY
Manifold: Brass.
Valve Type: 90° on/off.
Process Connection: 1/4″-18 female NPT.

OPTIONS	
Use order code:	**Description**
NISTCAL-PT1	NIST traceable calibration certificate

USA: California Proposition 65
⚠**WARNING:** This product can expose you to chemicals including Lead, which is known to the State of California to cause cancer and birth defects or other reproductive harm. For more information go to www.P65Warnings.ca.gov.

Dwyer

SERIES WWDP

DIFFERENTIAL PRESSURE TRANSMITTER

Selectable Ranges of Uni-Directional or Bi-Directional, Selectable Outputs

CALIBRATION SERVICES AVAILABLE

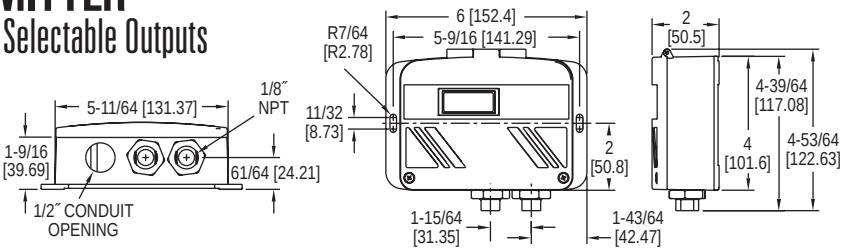

The **Series WWDP Differential Pressure Transmitter** offers everything in one package by having 30 field selectable variations in just 3 models. The WWDP provides field selectable unidirectional and bidirectional pressure ranges, configurable 0-5, 1-5, 0-10 VDC, and 4-20 mA output. It also provides an auto-zero capability. The field selectable port swap feature eliminates costly re-plumbing if the unit is improperly installed or if the transmitter is simply replaced. An optional LCD display is available for on-sight indication of line and differential pressure. The all cast aluminum housing is rated NEMA 4 (IP66). These features make the WWDP transmitter an ideal instrument for measuring the flow of various liquids and gases, pressure drop across filters, measurement of liquid level or pressurized vessels, and for use in energy management and process control systems.

BENEFITS/FEATURES

- Versatile device for liquid or gas supports designs requiring more precise measurements in support of application
- Field selectable port swap eliminates costly re-plumbing if unit is re-installed or replaced
- Uni-directional and bi-directional pressure selection with configurable output provides a single device that can meet broad application needs without having to specify multiple devices
- Optional LCD display provides local status to identify operational conditions
- NEMA 4 rated enclosure provides protection in harsh environments permitting outdoor monitoring or in areas where dust and particulate matter exists

APPLICATIONS

- Chiller monitoring
- Pressure vessels
- Filter monitoring
- Process control
- Energy management
- Liquid level

MODEL CHART

Model	Description (psid)	Max. Working Pressure (psi)
WWDP-1	Selectable 5, 10, 25, 50	50
WWDP-2	Selectable 10, 20, 50,100	100
WWDP-3	Selectable 25, 50,125, 250	250
WWDP-1-LCD	Selectable 5, 10, 25, 50	50
WWDP-2-LCD	Selectable 10, 20, 50,100	100
WWDP-3-LCD	Selectable 25, 50,125, 250	250

SPECIFICATIONS

Service: Gases or liquids compatible with 17-4 PH SS.
Accuracy: All pressure ranges have ±1% FS accuracy except the lowest selectable range of each unit is ±2% FS.
Stability: ±0.5% per year.
Temperature Limits: Compensated temperature range: 32 to 130°F (0 to 54°C); Operating temperature range: -4 to 185°F (-20 to 85°C).
Pressure Limits: Max working pressure: WWDP-1: 50 psi; WWDP-2: 100 psi; WWDP-3: 250 psi; Proof pressure: 2.2X of FS; Burst pressure: 40X of FS.
Thermal Effect: 2% FS/100°F (50°C) includes zero and span.
Power Requirements: 12-30 VDC/18-28 VAC (reverse excitation protected).
Note: 4-20 mA output cannot be powered with AC voltage.
Output Signal: Selectable 0-5, 0-10 and 1-5 VDC; 4-20 mA.
Zero and Span: Digital "re" zero button (should be used when changing ranges). Span can be adjusted by changing between field selectable ranges.
Response Time: 1 to 5 s (selectable).
Loop Resistance: 1000 Ω.
Current Consumption: VDC power: 0-5, 1-5 VDC output 4 mA (typ); 0-10 VDC output 5 mA (typ); 4-20 mA output 20 mA max. Current consumption will equal the transmitter output in current mode. VAC power: 0-5, 1-5, 0-10 VDC output 40 mA (typ).
Electrical Connections: 1/2″ conduit.
Process Connections: 1/8″ female NPT internal.
Enclosure Rating: Designed to meet NEMA 4 (IP56).
Mounting Orientation: Vertical; mount the pressure ports down (keeps debris from building up inside the pressure port).
Weight: 1.5 lb (680.4 g).
Agency Approvals: CE.

OPTIONS

Use order code:	Description
NISTCAL-PT1	NIST traceable calibration certificate

SERIES 765

PROCESS GAGE WITH DAMPENED MOVEMENT

±0.5% Accuracy, Safety Blow-Out Back

CALIBRATION SERVICES AVAILABLE

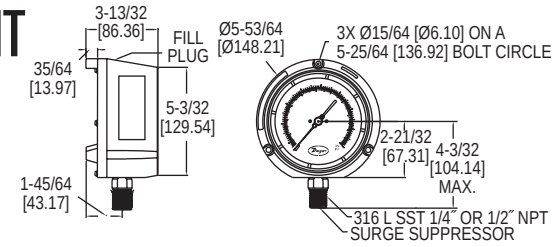

The **Series 765 Process Gage with Dampened Movement** minimizes effects of vibration without liquid filling. With this dampened movement the 765 gages are ideal for use in any application where high pulsation or vibration exists. The 765 gages offer dual scale range (psi/kPa) with ±0.5% full-scale accuracy. They are designed with a Phenolic safety-case and have a solid front with a blow-out back. Excellent chemical compatibility is insured with the 316L SS socket and Bourdon tube. A wide offering of ranges are available from full vacuum to 20,000 psi. The 765 process gage comes standard with bottom 1/4″ or 1/2″ male NPT connections.

BENEFITS/FEATURES

- Liquid-free dampened movement minimizes effect of vibration and cost to maintain
- Stainless steel socket and Bourdon tube permit use in chemical applications
- High accuracy gage for applications requiring more precise measurement
- Models that support vacuum to high pressure ranges provide a selection to meet specific applications
- Specified with high ambient and process temperature ratings mean more robust uses and longer service-life

APPLICATIONS

- Process applications
- Chemical
- Refinery
- Fertilizer
- Petrochemical
- Power
- Pharmaceutical
- Pulp and paper
- Cement

OPTIONS

Use order code:	Description
NISTCAL-PG1	NIST traceable calibration certificate

SPECIFICATIONS

Service: Compatible gases and liquids.
Wetted Materials: 316L SS socket and Bourdon tube.
Housing: Phenolic plastic with safety blow-out back.
Lens: Polycarbonate.
Accuracy: ±0.5% ANSI/ASME grade 2A.
Pressure Limit: 125% FS < 1500 psi, 115% FS for 2000 to 5000 psi, 110% FS > 10,000 psi.
Temperature Limits: -40 to 200°F (-40 to 93°C).
Size: 4-1/2″ (114.3 mm) dial face.
Process Connections: 1/4″ or 1/2″ NPT male.
Enclosure Rating: IP65 (NEMA 4).
Weight: 37 oz (1040 g).
Agency Approval: Meets the technical requirements of EU Directive 2011/65/EU (RoHS II).

MODEL CHART

Example	765	-01	2N	-FMR	765-012N-FMR
Series	765				4.5″ process gage
Range		01 02 03 04 05 06 07 08 09 10 11			30″ Hg-0 VAC (-100 to 0 kPa) 0 to 30 psi (0 to 206 kPa) 0 to 60 psi (0 to 410 kPa) 0 to 100 psi (0 to 680 kPa) 0 to 160 psi (0 to 1100 kPa) 0 to 200 psi (0 to 1370 kPa) 0 to 300 psi (0 to 2060 kPa) 0 to 400 psi (0 to 2770 kPa) 0 to 500 psi (0 to 3400 kPa) 0 to 600 psi (0 to 4100 kPa) 0 to 1000 psi (0 to 6800 kPa)
Process Connection			2N 4N		1/4″ male NPT 1/2″ male NPT
Additional Options				FMR SG45	Flush mounted ring Safety glass lens
Note: For additional ranges contact factory.					

Dwyer

SERIES DPGA/DPGW/DPGWB/DPGAB

0.5% AND 1% DIGITAL PRESSURE GAGES

Economic Gage with Selectable Engineering Units, Rubber Boot

CALIBRATION SERVICES AVAILABLE

DPGA

DPGW

DPGAB

DPGWB

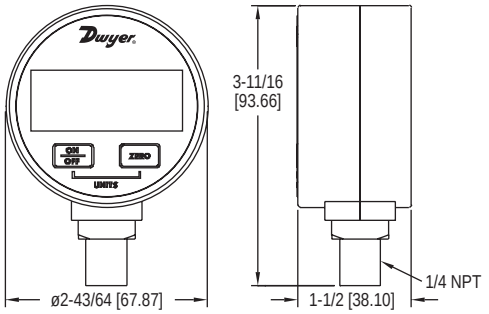

DPGA & DPGW

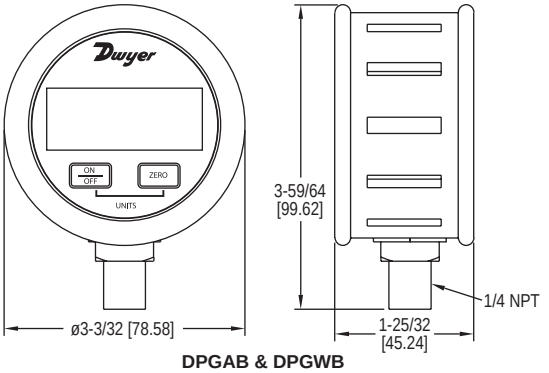

DPGAB & DPGWB

The **Series DPGA 1% Digital Pressure Gage** is the only economic digital pressure gage with selectable engineering units on the market. With its 1% accuracy and digital push-button zero, the DPGA is the perfect choice for digitally monitoring the pressures of air and compatible gases.

The **Series DPGW 1% Digital Pressure Gage** is the only economic digital pressure gage for liquids with the ability to select engineering units on the market. With its 1% accuracy and digital push-button zero, the DPGW is the perfect choice for digitally monitoring the pressures of air and compatible liquids and gases.

The **Series DPGWB/DPGAB 0.5% Digital Pressure Gage** offers full-scale accuracy in a rugged, easy-to-use unit at prices comparable to mechanical gages. The DPGWB stainless steel wetted material makes it suitable for a wide variety of liquids or gases. The gages feature user-selectable units of measure allowing one gage to be used for a variety of pressure scales. The DPGWB/DPGAB come with a protective rubber boot to protect against short drops and rough handling.

FEATURES/BENEFITS

- Push-button zero reduces installation and service time
- High accuracy provides exceptional measurement for minimizing costly out of specification conditions
- Selectable unit button provides reading in easily recognizable units
- Well-suited gage for compatible gas (DPGA) or liquid (DPGW) applications specifying simple operation and accuracy

APPLICATIONS

- Process applications
- Process start-up
- OEM applications

SPECIFICATIONS

Service: DPGA & DPGAB: Air and compatible gases; DPGW & DPGWB: Liquids and compatible gases.
Wetted Materials: DPGA & DPGAB: 316L SS, silicone sensor; DPGW & DPGWB: 316L SS.
Housing Materials: ABS plastic.
Accuracy: DPGA & DPGW: ±1.0% FS (includes linearity, hysteresis, repeatability); DPGAB & DPGWB: ±0.5% FS (includes linearity, hysteresis, repeatability).
Pressure Limits: 2X pressure range. Vacuum range max. pressure is 30 psig.
Temperature Limits: 30 to 120°F (-1 to 49°C).
Thermal Effect: 0.05% FS/°F.
Size: 2.62″ OD x 1.52″ deep.
Process Connections: 1/4″ male NPT.
Display: 4-digit LCD (.425″ H x .234″ W digits).
Power Requirements: 9 V alkaline battery, included, user replaceable.
Auto Shut-off: 20 minute auto shut-off.
Weight: 5.6 oz (160 g).

ACCESSORIES

Model	Description
A-293	Protective rubber boot

OPTIONS

To order add suffix:	Description
-NIST	NIST traceable calibration certificate

Example: DPGA-04-NIST, DPGAB-04-NIST

MODEL CHART

Model	Model	Range	Pressure Ranges psig	kg/cm²	bar	in Hg	ft w.c.	kPa	oz/in²	in w.c.	mbar	cm w.c.	mm Hg	Resolution psi
DPGA-00	DPGW-00	30″ Hg to 0 (psi)	-14.70	-1.033	-1.013	-29.93	-33.94	-101.4	-235.2	-407.3	-1013	-1034	-761	0.01
DPGA-04	DPGW-04	0 to 5 psi	5.000	.3515	.3447	10.18	11.53	34.47	80.0	138.4	344.7	351.5	258.6	0.002
DPGA-05	DPGW-05	0 to 15 psi	15.00	1.055	1.034	30.54	34.60	103.4	240.0	415.2	1034	1055	776	0.01
DPGA-06	DPGW-06	0 to 30 psi	30.00	2.109	2.068	61.1	69.2	206.8	480.0	830	2068	2109	1551	0.01
DPGA-07	DPGW-07	0 to 50 psi	50.00	3.515	3.447	101.8	115.3	344.7	800	1384	3447	3515	2586	0.02
DPGA-08	DPGW-08	0 to 100 psi	100.0	7.03	6.89	203.6	230.7	689	1600	2768	-	-	-	0.1
DPGA-09	DPGW-09	0 to 200 psi	200.0	14.06	13.79	407.2	461.3	1379	3200	-	-	-	-	0.1
DPGA-10	DPGW-10	0 to 300 psi	300.0	21.09	20.68	611	692	2068	4800	-	-	-	-	0.1
DPGA-11	DPGW-11	0 to 500 psi	500.0	35.15	34.47	1018	1153	3447	-	-	-	-	-	0.2

Compound range available: DPGW-12: 30″ Hg-0-100 psi.

MODEL CHART

Model	Model	Range	Pressure Ranges psig	kg/cm²	bar	in Hg	ft w.c.	kPa	oz/in²	in w.c.	mbar	cm w.c.	mm Hg	Resolution psi
DPGAB-00	DPGWB-00	30″ Hg to 0 (psi)	-14.70	-1.033	-1.013	-29.93	-33.94	-101.4	-235.2	-407.3	-1013	-1034	-761	0.01
DPGAB-04	DPGWB-04	0 to 5 psi	5.000	.3515	.3447	10.18	11.53	34.47	80.0	138.4	344.7	351.5	258.6	0.002
DPGAB-05	DPGWB-05	0 to 15 psi	15.00	1.055	1.034	30.54	34.60	103.4	240.0	415.2	1034	1055	776	0.01
DPGAB-06	DPGWB-06	0 to 30 psi	30.00	2.109	2.068	61.1	69.2	206.8	480.0	830	2068	2109	1551	0.01
DPGAB-07	DPGWB-07	0 to 50 psi	50.00	3.515	3.447	101.8	115.3	344.7	800	1384	3447	3515	2586	0.02
DPGAB-08	DPGWB-08	0 to 100 psi	100.0	7.03	6.89	203.6	230.7	689	1600	2768	-	-	-	0.1
DPGAB-09	DPGWB-09	0 to 200 psi	200.0	14.06	13.79	407.2	461.3	1379	3200	-	-	-	-	0.1
DPGAB-10	DPGWB-10	0 to 300 psi	300.0	21.09	20.68	611	692	2068	4800	-	-	-	-	0.1
DPGAB-11	DPGWB-11	0 to 500 psi	500.0	35.15	34.47	1018	1153	3447	-	-	-	-	-	0.2

Compound range available: DPGWB-12: 30″ Hg-0-100 psi.

Dwyer
SERIES DPG

DIGITAL PRESSURE GAGES

±0.25% or ±0.5% Full-Scale Accuracy, NEMA 4X (IP66) Aluminum Housing

CALIBRATION SERVICES AVAILABLE

DPG-000

DPG-100

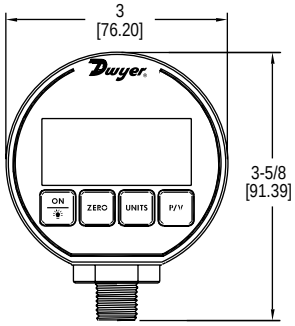

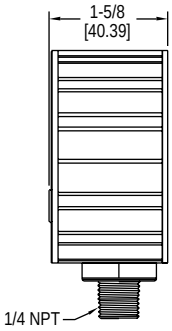

The **Series DPG Digital Pressure Gages** have a high ±0.25% or ±0.5% full-scale accuracy. The 4 digit digital display will reduce the potential for errors in readings by eliminating parallax error commonly produced with analog gages. Series DPG is battery powered and has an auto-shut off to conserve battery life. Battery life, on average, will last 2000 hours. A 4 button key pad allows easy access to features without the need to work through complex menus or difficult key combinations. These features include backlight, peak and valley, tare or auto zero and conversion of the pressure units.

BENEFITS/FEATURES

- High accuracy provides exceptional measurement minimizing costly out of specification conditions
- Backlit 4-digit display provides clear parallax-free reading reducing potential for errors
- Battery-powered gage with auto-shutoff eliminates wiring and prolongs battery life reducing service calls
- Push-button zero reduce installation and service time

APPLICATIONS

- Process applications
- Replacement for legacy analog gages
- OEM applications

SPECIFICATIONS

Service: Compatible liquids and combustible gases (for FM listing see Compliance below).
Wetted Materials: Type 316L SS.
Housing Materials: Polycarbonate front and back cover, anodized aluminum extruded housing with recessed grooves, polycarbonate overlay, Buna-N O-rings, 316L SS sensor construction.
Accuracy: DPG-000: ±0.5% FS; DPG-100: 0.25% FS; ±1 least significant digit @ 70°F (21°C) (includes linearity, hysteresis, repeatability).
Pressure Limit: 2x pressure range for models ≤1000 psi; 5000 psi for 3000 psi range; 7500 psi for 5000 psi range.
Enclosure Rating: Designed to meet NEMA 4/4X (IP66).
Temperature Limits: 0 to 130°F (-18 to 55°C).
Thermal Effect: Between 70 to 130°F is 0.016%/F; Between 32 to 70°F is 0.026%/F; Between 10 to 32°F is 0.09%/F.
Size: 3.00″ OD x 1.90″ deep (max).
Process Connection: 1/4″ male NPT.
Display: 4 digit (.425″ H x .234″ W digits).
Power Requirements: (2) AAA alkaline batteries, included, user replaceable.
Battery Life: 2000 hours typical; Low battery indicator (60 hours in continuous use).
Auto Shut-Off: Gage: 60 minute auto shut off. Auto shut-off may be disengaged; Backlight: 2 minute auto shut-off.
Weight: 8.84 oz (275 g).
Compliance: DPG-000: CE; DPG-100: CE, FM approved to be intrinsically safe for class I, division I, groups A, B, C and D, for ranges 0-15 to 0-3000 psi.

MODEL CHART

Model ±0.5%	Model ±0.25%	Range psi	Pressure Ranges kg/cm²	bar	in Hg	ft w.c.	kPa	oz/in²	in w.c.	mbar	cm w.c.	mm Hg
DPG-000*	-	-14.70 to 0	-1.033	-1.013	-29.93	-33.94	-101.4	-235.2	-407.3	-1013	-1034	-760.7
DPG-002*	**DPG-102**	15.00	1.055	1.034	30.54	34.61	103.4	240	415.2	1034	1055	775.7
DPG-003*	**DPG-103**	30.00	2.109	2.069	61.08	69.21	206.9	480	830.4	2069	2109	1551
DPG-004*	**DPG-104**	50.00	3.515	3.448	101.8	115.4	344.8	800	1384	3448	3515	2586
DPG-005*	**DPG-105**	100.0	7.03	6.895	203.6	230.7	689.5	1600	2768	6895	7031	5172
DPG-006*	**DPG-106**	200.0	14.06	13.79	407.2	461.4	1379	3200	5536	-	-	-
DPG-007*	**DPG-107**	300.0	21.09	20.69	610.8	692.1	2069	4800	8304	-	-	-
DPG-008*	**DPG-108**	500.0	35.15	34.48	1018	1154	3448	8000	-	-	-	-
DPG-009*	**DPG-109**	1000	70.3	68.98	2036	2307	6895	-	-	-	-	-
DPG-010*	**DPG-110**	3000	210.9	206.9	6108	6921	-	-	-	-	-	-
DPG-011*	**DPG-111***	5000	351.5	344.8	-	-	-	-	-	-	-	-
DPG-020*	-	-14.70 to 15.00	-1.033 to 1.055	-1.013 to 1.034	-29.93 to 30.54	-33.94 to 34.61	-101.4 to 103.4	-235.2 to 240	-407.3 to 415.2	-1013 to 1034	-1034 to 1055	-760.7 to 775.7
DPG-021*	-	-14.70 to 30.00	-1.033 to 2.109	-1.013 to 2.069	-29.93 to 61.08	-33.94 to 69.21	-101.4 to 206.9	-235.2 to 480	-407.3 to 830.4	-1013 to 2069	-1034 to 2109	-760.7 to 1551
DPG-022*	-	-14.70 to 45.00	-1.033 to 3.164	-1.013 to 3.103	-29.93 to 91.63	-33.94 to 103.8	-101.4 to 310.3	-235.2 to 720	-407.3 to 1245	-1013 to 3102	-1034 to 3164	-760.7 to 2327
DPG-023*	-	-14.70 to 60.00	-1.033 to 4.218	-1.013 to 4.137	-29.93 to 122.2	-33.94 to 138.4	-101.4 to 413.7	-235.2 to 960	-407.3 to 1661	-1013 to 4137	-1034 to 4218	-760.7 to 3103
DPG-024*	-	-14.70 to 100.0	-1.033 to 7.03	-1.013 to 6.895	-29.93 to 203.6	-33.94 to 230.7	-101.4 to 689.5	-235.2 to 1600	-407.3 to 2768	-1013 to 6895	-1034 to 7031	-760.7 to 5172

*Model is not FM approved.

OPTIONS

To order add suffix:	Description
-NIST	NIST traceable calibration certificate
Example: DPG-002-NIST	

ACCESSORIES

Model	Description
A-183	Protective rubber boot
A-184	Carrying case

DPG-100 with protective rubber boot

Protective carrying case

Dwyer

SERIES DCGII

DIGITAL CALIBRATION PRESSURE GAGE

±0.05% FS Accuracy, 316 SS Wetted Parts

CALIBRATION SERVICES AVAILABLE

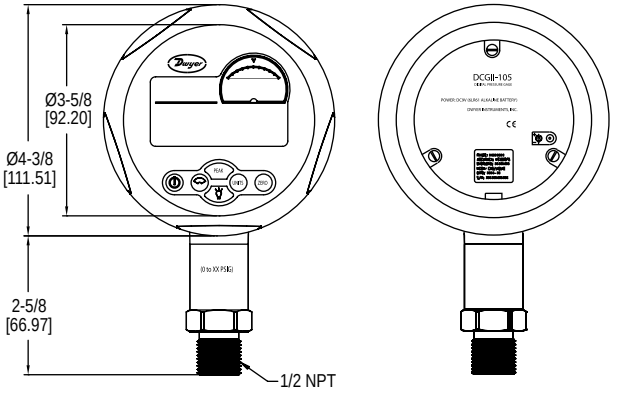

The **Series DCGII Digital Calibration Pressure Gage** offers a complete pressure gage with calibration capabilities. With a precise 0.05% full-scale accuracy and large 5 digit resolution, this gage can be used in critical industrial applications where precision is most important. This versatile gage only requires one 9 V battery or power adaptor and can operate up to 5,000 working hours. The Series DCGII 0.05% Digital Pressure Gage can display percent of range, pressure swings or alarm set points. This pressure gage comes complete with ten selectable pressure units, backlight and zeroing capability.

BENEFITS/FEATURES

- Highest accuracy provides exceptional measurement for calibration minimizing costly out of specification conditions
- Stainless steel housing resists ambient corrosion for longer service life in harsh environments
- Lightweight and slim, yet large easy to read battery-powered gage make them easy to carry and read
- Specified with high ambient temperature rating means more robust uses and longer service-life
- Indicator can display pressure swings, minimum and maximum peak detection with alarm set points provides a multipurpose tool where critical calibration is needed

APPLICATIONS

- Field gage calibration
- Permanent installation
- Burst disc testing
- Pressure regulator testing and hydrostatic leak testing

SPECIFICATIONS

Service: Compatible, non-combustible liquids and gases.
Wetted Materials: 316 SS.
Other Materials: Housing: Aluminum alloy; Display: Acrylic MR200; Buttons: Silicon gel; Back plate: 304 SS; Back seal: Oil-proof latex.
Accuracy: 0.05% FS; ±1 least significant digit.
Temperature Accuracy: ±1°C.
Pressure Limits: 120% FS.
Temperature Limits: 14 to 122°F (-10 to 50°C).
Compensated Limits: 32 to 122°F (0 to 50°C).
Process Connection: 1/2″ male NPT.
Display: 5-digit LCD with blue backlight.
Power Requirements: 9 V alkaline battery, not included, or power adaptor accessory.
Battery Life: Up to 10,000 hours (600 working hours @ default 3 times/s).
Auto Shut-Off: Backlight: On/off, 10 s, 20 s, 30 s.
Weight: 1.28 lb (0.58 kg).
Compliance: CE.

MODEL CHART

Model	Range (psig)	kPa	MPa	kgf/cm²	mm H_2O	in H_2O	in Hg	mm Hg	psi	mbar	bar
DCGII-100	-14.7 to 0	-101.35	-0.1013	-1.0335	-10334	-406.90	-29.929	-760.21	-14.700	1013.5	-1.0135
DCGII-102	0 to 30	206.84	0.2067	2.1092	21090	830.40	61.080	1551.4	30.000	2068.4	2.0684
DCGII-103	0 to 60	413.69	0.4134	4.2184	42180	1660.8	122.16	3102.9	60.000	4136.9	4.1369
DCGII-104	0 to 100	689.48	0.6890	7.0307	70301	2768.0	203.60	5171.5	100.00	6894.8	6.8948
DCGII-105	0 to 200	1379.0	1.3780	14.061	-	5536.0	407.20	1034.3	200.00	1379.0	13.790
DCGII-106	0 to 300	2068.4	2.0670	21.092	-	8304.0	610.80	1551.4	300.00	2068.4	20.684
DCGII-109	0 to 2000	1379.0	13.780	140.61	-	5536.0	4072.0		2000.00		137.90

OPTIONS

Use order code:	Description
NISTCAL-PG2	NIST traceable pressure calibration certificate

Note: New units include data report/calibration report. NIST can be provided for an additional fee.

ACCESSORIES

Model	Description
A-644	9 V DC power adaptor
BBV-0N	2-valve block manifold
PCHP-1❶	Pneumatic calibration pump

❶See page 194 (Series PCHP)

Dwyer

SERIES DPG-200

DIGITAL PRESSURE GAGE

3-in-1: Gage, Transmitter and Switch

CALIBRATION SERVICES AVAILABLE

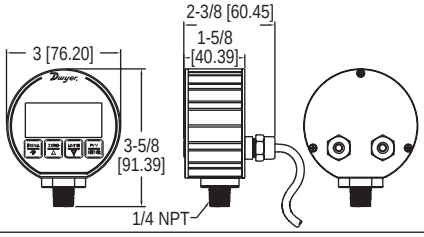

The **Series DPG-200 Digital Pressure Gage** has a precise ±0.25% full-scale accuracy. The 4 digit digital display will reduce the potential for errors in readings by eliminating parallax error commonly produced with analog gages. The DPG-200 is packaged in a durable extruded aluminum case designed to meet NEMA 4X (IP66). The unit is powered by 12-24 VDC/VAC and contains two alarm set points along with a 4-20 mA process output. A four-button keypad allows easy access to features. These features include backlight, peak and valley, auto zero and conversion of the pressure units. Pressure ranges also in mbar, kg/cm^2, oz/in^2, in Hg, mm Hg, ft w.c. and ft sw for various models.

BENEFITS/FEATURES
- High accuracy provides exceptional measurement minimizing costly out of specification conditions
- Backlit 4-digit display provides clear parallax-free reading reducing potential for errors
- Durable aluminum case to meet NEMA 4X (IP66) requirements supports use in harsh or outdoor environments
- Push-button zero reduce installation and service time

APPLICATIONS
- Process control
- Compressor control

MODEL CHART

Model	Range (psig)	Pressure Ranges bar	ft w.c.	kPa	in w.c.	cm w.c.
DPG-200	-14.70-0	-1.013	-33.94	-101.4	-407.3	-1034
DPG-202	15.00	1.034	34.61	103.4	415.2	1055
DPG-203	30.00	2.069	69.21	206.9	830.4	2109
DPG-204	50.00	3.448	115.4	344.8	1384	3515
DPG-205	100.0	6.895	230.7	689.5	2768	7031
DPG-206	200.0	13.79	461.4	1379	5536	-
DPG-207	300.0	20.69	692.1	2069	8304	-
DPG-208	500.0	34.48	1154	3448	-	-
DPG-209	1000	68.98	2307	6895	-	-
DPG-210	3000	206.9	6921	-	-	-
DPG-211	5000	344.8	-	-	-	-

Note: Compound range available: DPG-220 range: 30″ Hg-0-15 psi.

SPECIFICATIONS

DIGITAL GAGE SPECIFICATIONS
Service: Liquids and non-combustible compatible gases.
Wetted Materials: Type 316L SS.
Enclosure: Black polycarbonate front & back cover, anodized aluminum extruded enclosure with recessed grooves, polycarbonate overlay, Buna-N O-rings, 316L SS sensor construction.
Accuracy: 0.25% FS ±1 least significant digit (includes linearity, hysteresis, repeatability).
Pressure Limit: 2x pressure range for models ≤ 1000 psi; 5000 psi for 3000 psi range; 7500 psi for 5000 psi range.
Temperature Limits: 32 to 158°F (0 to 70°C).
Process Connection: 1/4″ male NPT.
Display: 4 digit (.425″ H x .234″ W digits).
Size: 3.00″ OD x 1.90″ deep (not including cables).
Weight: 8.84 oz (275 g).

SWITCH SPECIFICATIONS
Switch Type: 2 SPDT form C contacts.
Electrical Rating: 0.5 A @ 125 VAC resistive, 1 A @ 24 VDC.
Relay Differential: 1 least significant digit.
Electrical Connections: 3 ft (.91 m) cable.
Mounting Orientation: Mount in any position.
Set Point Adjustment: Via menu.

TRANSMITTER SPECIFICATIONS
Temperature Limits: 0 to 158°F (0 to 70°C).
Thermal Effect: Between 70 to 158°F = 0.016%/°F. Between 0 to 70°F = 0.026%/°F.
Power Requirements: 12-24 VAC ±20% 50 to 400 Hz, 12-24 VDC ±20%.
Output Signal: 4-20 mA.
Loop Resistance: 600 Ω max.
Power Consumption: 0.8 W max.
Electrical Connections: 3 ft (.91 m) cable.
Enclosure Rating: Designed to meet NEMA 4X (IP66).

OPTIONS

To order, add suffix:	Description
-NIST	NIST traceable calibration certificate

SERIES DSGT

DIGITAL INDICATING TRANSMITTER

±0.25% Full-Scale Accuracy

CALIBRATION SERVICES AVAILABLE

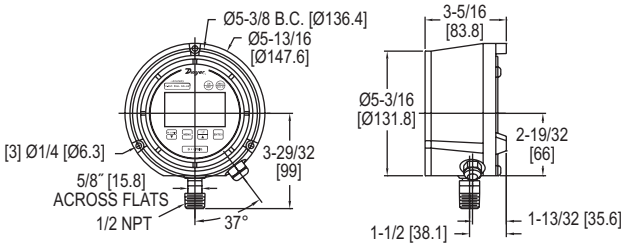

The **Series DSGT Digital Indicating Transmitter** is a versatile multi-function process gage that features an excellent 0.25% full-scale accuracy. This all-in-one digital gage package is designed to reduce installation costs, instrument cost, and save space where an application requires a gage, transmitter, and switches. The Series DSGT gage comes standard with a loop-powered 4-20 mA transmitter. The Series DSGT gage is enclosed in a durable fiberglass reinforced thermoplastic case that is designed to meet NEMA 4 IP56 requirements. The gage features a menu-driven display for easy customization. User selectable features include 12 engineering units of measure, password protected calibration and disable functions, as well as an adjustable bar graph and update/dampening rates.

BENEFITS/FEATURES
- All-in-one digital gage package is designed to reduce installation costs, instrument cost, and save space where an application requires a gage, transmitter, and switches
- Durable fiberglass reinforced thermoplastic case to meet NEMA 4 (IP56) requirements supports use in harsh environments
- Password protected calibration and disable functions helps to insure no errors by untrained personnel

APPLICATIONS
- Process
- Outdoor
- Compressor
- OEM

SPECIFICATIONS

GAGE SPECIFICATIONS
Service: Compatible, non-combustible liquids and gases.
Wetted Materials: 17 to 4 SS sensor, 316 SS socket.
Housing Materials: Fiberglass reinforced thermoplastic case.
Accuracy: 0.25% FS (includes linearity, hysteresis, repeatability).
Pressure Limit: 2 x FS range.
Process Connection: 1/2″ male NPT.
Display: 5 digit (0.88″ high).

TRANSMITTER SPECIFICATIONS
Power Requirements: 12-36 VDC (loop powered).
Memory Back Up Supply: (2) C alkaline batteries, installed functional, user replaceable.
Output Signal: 4-20 mA.
Response Time: 100 ms.
Temperature Limits: 14 to 140ºF (-10 to 60ºC).
Thermal Effects: 0.04% FS/°F.
Electrical Connections: 3 ft flying leads.
Loop Resistance: DC; 0 to 1090 Ω max.
Set Point Adjustments: Adjustable through menu selections.
Weight: 1.45 lb (.66 kg).

OPTIONS

To order, add suffix:	Description
NISTCAL-PT1	NIST traceable calibration certificate

MODEL CHART

Model	Range (psig)	Model	Range (psig)	Model	Range (psig)	Model	Range (psig)
DSGT-101-C0S	30″ Hg-0 to 15	**DSGT-106-C0S**	0 to 100	**DSGT-109-C0S**	0 to 300	**DSGT-116-C0S**	0 to 5000
DSGT-102-C0S	30″ Hg-0 to 30	**DSGT-107-C0S**	0 to 160	**DSGT-110-C0S**	0 to 600	**DSGT-117-C0S**	0 to 8000
DSGT-104-C0S	0 to 30	**DSGT-108-C0S**	0 to 200	**DSGT-112-C0S**	0 to 1000	**DSGT-118-C0S**	0 to 10000
DSGT-105-C0S	0 to 60						

Dwyer

SERIES DPT

DIGITAL PRESSURE TRANSMITTER WITH SWITCHES

Two Solid State Switches, LED Display

CALIBRATION SERVICES AVAILABLE

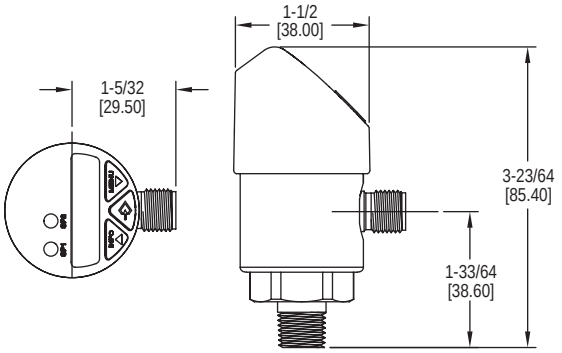

The **Series DPT Digital Pressure Transmitter with Switches** combines a large, 14-segment LED display with two programmable solid state switches into one compact unit. A unique, 3-way rotating design allows the DPT to meet specific installation requirements without any retrofitting. The display and electrical connection can be rotated independently to maximize visibility while still orienting the electrical connection in the best position for the cable connector. Large, ergonomically designed push-buttons allow for quick/easy programming and thin-film piezoresistive sensor technology guarantees long-term reliability and stability.

BENEFITS/FEATURES

- Compact size, lightweight, and high accuracy supports multiple installation methods to support application need and footprint
- Rotating display and electrical connection to maximize visibility while orienting the electrical connection in the best position for the cable connector

APPLICATIONS

- Calibration
- Hydraulics and pneumatics
- Machine tools
- Compressors and pumps
- Machine building

SPECIFICATIONS

Service: Compatible gases, liquids or vapors.
Wetted Materials: Pressure connection: 316L SS; Pressure sensor: 316L SS (13-8 PH for ranges above 150 psi).
Housing: 316L lower body, heat and chemical resistant fiberglass reinforced plastic (PBT) plastic head, TPE-E keyboard, PC display window.
Accuracy: 1.0% FS (includes non-linearity, hysteresis, zero point).
Pressure Limit: See table.
Temperature Limits: 32 to 176°F (0 to 80°C).
Process Connections: 1/4″ male NPT.
Display: Red LED 4-digit (0.35″ H digits).
Weight: 7 oz (0.2 kg).

SWITCH SPECIFICATIONS
Switch Type: PNP.
Electrical Rating: 250 mA.
Electrical Connections: M 12x1, 5-pin.
Mounting Orientation: Mount in any position.

TRANSMITTER SPECIFICATIONS
Temperature Limits: 32 to 176°F (0 to 80°C).
Thermal Effect: 0.2% FS / 10k.
Power Requirements: 15-35 VDC.
Output Signal: DPT-A: 4-20 mA; DPT-V: 0-10 VDC.
Loop Resistance: DPT-A: ≤ 0.5k; DPT-V: > 10k.
Power Consumption: ≤ 100 mA.
Electrical Connections: M 12x1, 5-pin.
Enclosure Rating: IP67.

MODEL CHART

0-10 VDC Model	4-20 mA Model	Range (psig)	Maximum Pressure (psig)	Burst Pressure (psig)	Pressure Ranges bar	MPa	kPa	kg/cm²
DPT-V00	**DPT-A00**	-14.5 to 0	30	75	1.034	.1034	103.4	1.055
DPT-V01	**DPT-A01**	0 to 15	30	75	1.034	.1034	103.4	1.055
DPT-V02	**DPT-A02**	0 to 25	60	150	1.724	.1724	172.4	1.758
DPT-V03	**DPT-A03**	0 to 30	60	150	2.068	.2068	206.8	2.109
DPT-V04	**DPT-A04**	0 to 50	100	250	3.447	.3447	344.7	3.515
DPT-V05	**DPT-A05**	0 to 100	200	500	6.895	.6895	689.5	7.031
DPT-V06	**DPT-A06**	0 to 160	290	500	11.03	1.103	1103	11.25
DPT-V07	**DPT-A07**	0 to 200	400	1500	13.79	1.378	1378	14.06
DPT-V08	**DPT-A08**	0 to 300	600	1500	20.68	2.068	2068	21.09
DPT-V09	**DPT-A09**	0 to 500	1000	2500	34.47	3.447	3447	35.15
DPT-V10	**DPT-A10**	0 to 1000	1740	7975	68.95	6.895	6895	70.31

OPTIONS

Use order code:	Description
NISTCAL-PT1	NIST traceable calibration certificate

ACCESSORIES

Model	Description
A-195	6´ (2 m) shielded cable with 5 pin female M-12 connections

ELECTRONIC PRESSURE CONTROLLER

2 Switches, Indicating Gage, and Transmitter in One Package

CALIBRATION SERVICES AVAILABLE

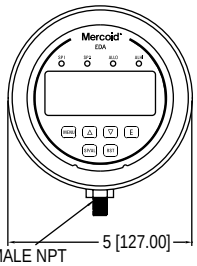

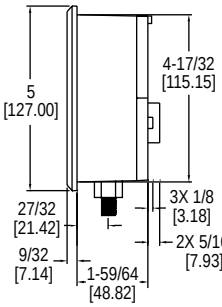

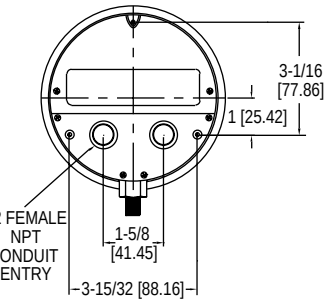

Series EDA Electronic Pressure Controller is an extremely versatile compact package that can replace a separate gage, two switches, and a transmitter in a system saving money, installation time, and panel space. The EDA incorporates two SPDT relays that have the on and off points fully adjustable over the range for control or alarm use. Front face has LED indicators for switch status and a large backlight two-line display showing process value and indication units. Programming is easy with simple menu structure, two-line display, and external programming buttons. Weatherproof housing is ideal for a wide variety of applications with panel mount, flush mount, or pipe mount ability. Features include zero set, adjustable dampening, menu lock out, peak and valley indication, removable terminal blocks, adjustable time delay, and scalable transmitter output.

BENEFITS/FEATURES

- Can replace separate gages, two switches and a transmitter in a system saving money, installation time, and panel space with its versatile and compact functionality
- Meets simple and complex application needs with fully programmable software
- Easily test switch and transmitter output function through the test mode that simulates input over the range without pressuring the system
- Protection in case of sensor failure, over pressure, high temperature limit, low temperature limit, or keypad short with fail-safe relay output choices
- Even wear on duplex pump applications via selectable alternation of the set points between relays
- Ideal for a wide variety of applications with panel mount,flush mount, or pipe mount ability due to its rugged weatherproof housing
- Eliminate the need of a step down transformer with the -HV 120/240 VAC power option

APPLICATIONS

- Process control
- Compressor control
- Filter status
- Duct or building static pressure
- Damper and fan control

SPECIFICATIONS

Service: Compatible liquids and gases.
Wetted Materials: 316L SS.
Housing: Polycarbonate.
Accuracy: ±1% of FS including linearity, hysteresis, and repeatability (indicator and transmitter).
Stability: < ±2% of FS per year.
Pressure Limits: 1.5 x range.
Temperature Limits: Ambient: 20 to 140°F (-6.6 to 60°C); Process: 0 to 176°F (-18 to 80°C).
Compensated Temperature Limits: 32 to 122°F (0 to 50°C).
Thermal Effect: ±0.05% of FS/°F.
Display: 4-digit backlit LCD (digits: 0.60″H x 0.33″ W).
Power Requirements: 12-28 VDC/AC 50/60 Hz. (Can work at 8 VDC for 45 s). For T5 option: 14-30 VDC/AC 50/60 Hz. For -HV option: 120-240 VAC.
Power Consumption: 12-28 VDC/VAC: 2.5 watts; 120-240 VAC: 4.5 watts.
Electrical Connections: Removable terminal blocks with two 1/2″ female NPT conduit connections.
Enclosure Rating: Meets NEMA 4X (IP66).
Warm Up Time: <10 s.
Mounting Orientation: Any position.
Weight: 1.18 lb (535 g).
Agency Approvals: CE, UL.

SWITCH SPECIFICATIONS
Switch Type: 2 SPDT relays.
Electrical Rating: 5 A @ 120/240VAC, 1 A @ 30 VDC.
Repeatability: ±1% of FS (switching only).
Set Points: Adjustable 0-100% of FS.
Switch Indication: External LED for each relay on the front panel.
Switch Reset: Manual or automatic.

TRANSMITTER SPECIFICATIONS
Output Signal: 4-20 mA, 1-6 VDC, 1-5 VDC, 0-5 VDC, or 0-10 VDC (direct or reverse output selection).
Minimum Excitation: 14 VDC.
Zero and Span Adjustments: Menu scalable within the range.

MODEL CHART

Example	EDA	W	-N1	E1	-02	T0	-AT	EDAW-N1E1-02T0-AT
Series	EDA							Electronic pressure controller
Housing		W						Weatherproof
Process Connection			N1					1/4″ NPT male bottom
Electrical Connection				E1				Two 1/2″ female NPT conduit connections
Range					02 03 04 05 06 07 08 09 10			0-20 psi (1.379 bar) 0-60 psi (4.14 bar) 0-100 psi (6.89 bar) 0-150 psi (10.34 bar) 0-300 psi (20.68 bar) 0-600 psi (41.4 bar) 0-1000 psi (68.9 bar) 0-1500 psi (103.4 bar) 0-3000 psi (206.8 bar)
Transmitter Output						T0 T1 T2 T3 T4 T5		None 4-20 mA 1-5 VDC 0-5 VDC 1-6 VDC 0-10 VDC
Options							AT HV NIST	Aluminum adhesive tag 120-240 VAC power NIST certificate

ACCESSORIES

Model	Description
A-590	1/2″ conduit plug, watertight
A-EDA-BRK	Flush mount bracket for EDA, bracket is then surface mounted, steel with gray hammertone epoxy finish

A-EDA-BRK with EDA installed

Dwyer

SERIES DA/DS

BOURDON TUBE PRESSURE SWITCH

Pressure Ranges to 8000 psi (551.6 bar)

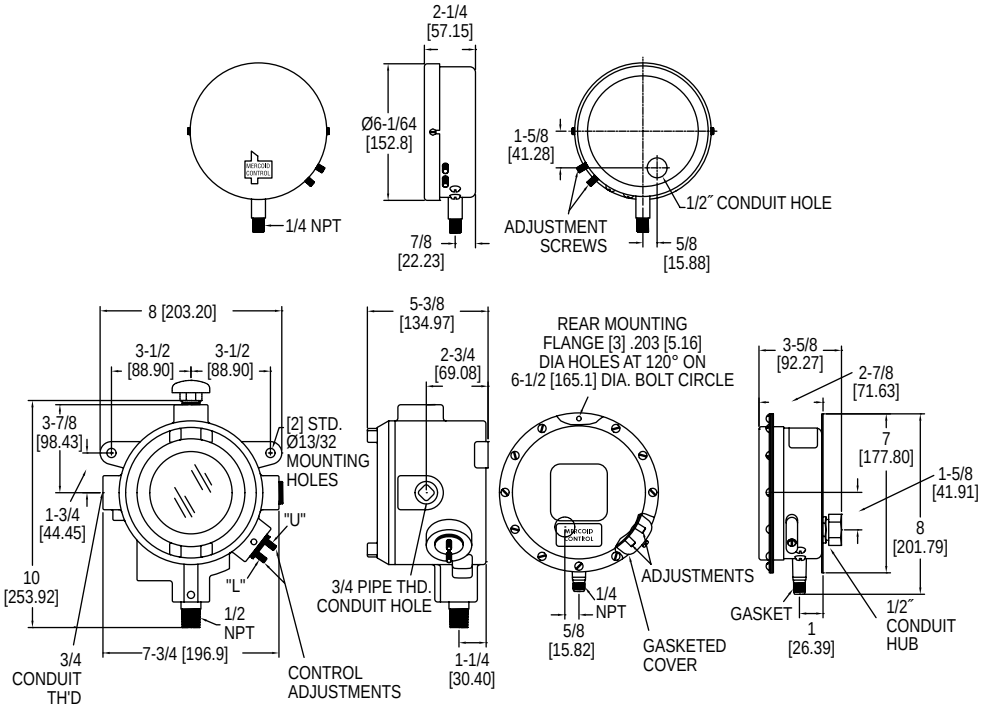

Customers tell us that the **Series DA/DS Bourdon Tube Pressure Switch** is the best pressure switch made. The Mercoid DA/DS Series is one of the world's broadest lines of pressure switches. The DA/DS Series has extremely high sensitivity and great repeatability. The DA Models are equipped with two external adjustments, one for setting high pressure operating point, the other for setting low pressure operating point. Deadband, the difference between high and low setpoints, is adjustable over the full-scale. The DS Models are equipped with a single external adjustment for setting operating point only. For mercury-free switches, choose between the snap action switch or hermetically sealed snap action switch. Hermetically sealed mercury switch also available.

BENEFITS/FEATURES

- Visible calibrated dial provides an easy and fast check without having to open device causing dangerous conditions to operators
- On/off indication (except hermetically sealed snap switch models) gives operator clear indication of state of switched equipment that could be located in another location
- Adjustable or fixed deadband supports control applications by reducing equipment wear-out by unnecessary recycling
- External switch set point adjustment reduces set-up time
- Pressure ranges of full vacuum to 8000 psig gives application designers the ability to specify standard equipment, simplifying install and training, and reducing servicing costs
- UL listed, CSA approved, many models FM approved to support rigorous process applications and regulations
- General purpose, weatherproof or explosion-proof enclosures for a variety of indoor or outdoor environments meeting the needs of multiple applications and uses

APPLICATIONS

- Compressors
- Mechanical HVAC or process equipment
- Pump control

SPECIFICATIONS

Wetted Materials: Brass, 403 SS, or 316 SS.
Temperature Limit: 180°F (82°C).
Pressure Limit: Maximum pressure of the operating range.
Enclosure Rating: General purpose, weatherproof or explosion-proof.
Repeatability: ±1% of full operating range, ±1.5% on DS-7300 models.
Switch Type: SPST mercury switch, SPDT mercury switch, SPDT snap switch. Other circuit types available.
Electrical Rating: See model charts.
Electrical Connections: Screw terminal.
Conduit Connection: General purpose: 1/2″ hole for conduit hub; Weatherproof: 1/2″ conduit hub; Explosion-proof: 3/4″ female NPT.
Process Connection: General purpose and weatherproof: 1/4″ male NPT, 1/2″ male NPT on ranges 15S and 16S; Explosion-proof: 1/2″ male NPT and 1/4″ female NPT.
Mounting Orientation: Vertical.
Set Point Adjustment: Thumbscrew.
Weight: General purpose: 4 lb (1.8 kg); Weatherproof: 6 lb (2.7 kg); Explosion-proof: 8 lb (3.5 kg).
Deadband: See model chart.
Compliance: CSA, FM, UL (mercury switch units are not CE approved) (Consult factory for FM approved models).

USA: California Proposition 65
WARNING: This product can expose you to chemicals including Lead, which is known to the State of California to cause cancer and birth defects or other reproductive harm. For more information go to www.P65Warnings.ca.gov.

BOURDON TUBE PRESSURE SWITCH

Pressure Ranges to 8000 psi (551.6 bar)

MODEL CHART - D SERIES PRESSURE SWITCH WITH SNAP ACTION SWITCH AND GENERAL PURPOSE ENCLOSURE					
Bourdon Tube Material	Adjustable Operating Range (psig)	Adjustable Deadband SPDT: 10 A @ 120/240 VAC		Fixed Deadband SPDT: 15 A @ 120/240 AC	
		Minimum Deadband (psig)	Model	Fixed	Model
Brass	0 to 30″ Hg VAC	13.5″ Hg	**DA-7031-153-2**	3″ Hg	**DS-7231-153-2**
Brass	10″ Hg VAC to 12	6	**DA-7031-153-3**	1.5	**DS-7231-153-3**
Brass	25″ Hg VAC to 50	12	**DA-7031-153-27**	2.5	**DS-7231-153-27**
Brass	1/8 to 15	6	**DA-7031-153-1**	1.5	**DS-7231-153-1**
Brass	1/8 to 20	6	**DA-7031-153-3A**	1.5	**DS-7231-153-3A**
Brass	1 to 35	7.5	**DA-7031-153-4**	1.5	**DS-7231-153-4**
Brass	2 to 60	9	**DA-7031-153-5**	2	**DS-7231-153-5**
Brass	5 to 100	13.5	**DA-7031-153-6**	2.5	**DS-7231-153-6**
Brass	5 to 150	24	**DA-7031-153-7**	3	**DS-7231-153-7**
Brass	10 to 200	24	**DA-7031-153-8**	4	**DS-7231-153-8**
Brass	10 to 300	37.5	**DA-7031-153-9**	5	**DS-7231-153-9**
403 SS	30″ Hg VAC to 60	18	**DA-7021-153-25S**	3.5	**DS-7221-153-25S**
403 SS	30″ Hg VAC to 75	22.5	**DA-7021-153-26S**	3.5	**DS-7221-153-26S**
403 SS	2 to 60	13.5	**DA-7021-153-5S**	3	**DS-7221-153-5S**
403 SS	5 to 100	19.5	**DA-7021-153-6S**	3.5	**DS-7221-153-6S**
403 SS	10 to 200	22.5	**DA-7021-153-8S**	4	**DS-7221-153-8S**
403 SS	10 to 300	28.5	**DA-7021-153-9S**	6	**DS-7221-153-9S**
403 SS	40 to 350	30	**DA-7021-153-9AS**	6	**DS-7221-153-9AS**
403 SS	25 to 600	67.5	**DA-7021-153-10S**	10	**DS-7221-153-10S**
403 SS	50 to 1000	142.5	**DA-7021-153-11S**	20	**DS-7221-153-11S**
403 SS	100 to 1500	195	**DA-7021-153-12S**	30	**DS-7221-153-12S**
403 SS	300 to 2500	390	**DA-7021-153-13S**	60	**DS-7221-153-13S**
403 SS	500 to 5000	1350	**DA-7021-153-15S**	200	**DS-7221-153-15S**
403 SS	800 to 8000	2250	**DA-7021-153-16S**	500	**DS-7221-153-16S**
316 SS	30″ Hg VAC to 75	15	**DA-7041-153-26E**	3.5	**DS-7241-153-26E**
316 SS	5 to 75	12	**DA-7041-153-23E**	4	**DS-7241-153-23E**
316 SS	10 to100	15	**DA-7041-153-6E**	3.5	**DS-7241-153-6E**
316 SS	10 to 150	16.5	**DA-7041-153-24E**	4	**DS-7241-153-24E**
316 SS	10 to 300	42	**DA-7041-153-9E**	8	**DS-7241-153-9E**
316 SS	30 to 400	78	**DA-7041-153-21E**	10	**DS-7241-153-21E**
316 SS	75 to 800	180	**DA-7041-153-22E**	25	**DS-7241-153-22E**
316 SS	100 to 1000	285	**DA-7041-153-11E**	35	**DS-7241-153-11E**
316 SS	200 to 2500	600	**DA-7041-153-13E**	75	**DS-7241-153-13E**

MODEL CHART - D SERIES PRESSURE SWITCH WITH MERCURY SWITCH AND GENERAL PURPOSE ENCLOSURE					
Bourdon Tube Material	Adjustable Operating Range (psig)	Adjustable Deadband			
		Minimum Deadband (psig)	SPDT 4 A @ 120 V, 2 A @ 240 V AC/DC	SPST Open on Increase 10 A @ 120 V, 5 A @ 240 V AC/DC	SPST Close on Increase 10 A @ 120 V 5 A @ 240 V AC/DC
Brass	30″ to 0 Hg VAC	2″ Hg	**DA-31-153-2**	**DA-31-2-2**	**DA-31-3-2**
Brass	10″ Hg VAC to 12	1	**DA-31-153-3**	**DA-31-2-3**	**DA-31-3-3**
Brass	25″ Hg VAC to 50	3.5	**DA-31-153-27**	**DA-31-2-27**	**DA-31-3-27**
Brass	1/8 to 15	1	**DA-31-153-1**	**DA-31-2-1**	**DA-31-3-1**
Brass	1/8 to 20	1	**DA-31-153-3A**	**DA-31-2-3A**	**DA-31-3-3A**
Brass	1 to 35	1.75	**DA-31-153-4**	**DA-31-2-4**	**DA-31-3-4**
Brass	2 to 60	3	**DA-31-153-5**	**DA-31-2-5**	**DA-31-3-5**
Brass	5 to 100	3.75	**DA-31-153-6**	**DA-31-2-6**	**DA-31-3-6**
Brass	5 to 150	6	**DA-31-153-7**	**DA-31-2-7**	**DA-31-3-7**
Brass	10 to 200	8	**DA-31-153-8**	**DA-31-2-8**	**DA-31-3-8**
Brass	10 to 300	12	**DA-31-153-9**	**DA-31-2-9**	**DA-31-3-9**
403 SS	30″ Hg VAC to 60	6	**DA-21-153-25S**	**DA-21-2-25S**	**DA-21-3-25S**
403 SS	30″ Hg VAC to 75	8	**DA-21-153-26S**	**DA-21-2-26S**	**DA-21-3-26S**
403 SS	2 to 60	4	**DA-21-153-5S**	**DA-21-2-5S**	**DA-21-3-5S**
403 SS	5 to 100	6	**DA-21-153-6S**	**DA-21-2-6S**	**DA-21-3-6S**
403 SS	10 to 200	8	**DA-21-153-8S**	**DA-21-2-8S**	**DA-21-3-8S**
403 SS	10 to 300	14	**DA-21-153-9S**	**DA-21-2-9S**	**DA-21-3-9S**
403 SS	40 to 350	14	**DA-21-153-9AS**	**DA-21-2-9AS**	**DA-21-3-9AS**
403 SS	25 to 600	25	**DA-21-153-10S**	**DA-21-2-10S**	**DA-21-3-10S**
403 SS	50 to 1000	60	**DA-21-153-11S**	**DA-21-2-11S**	**DA-21-3-11S**
403 SS	100 to 1500	90	**DA-21-153-12S**	**DA-21-2-12S**	**DA-21-3-12S**
403 SS	300 to 2500	150	**DA-21-153-13S**	**DA-21-2-13S**	**DA-21-3-13S**
403 SS	500 to 5000	450	**DA-21-153-15S**	**DA-21-2-15S**	**DA-21-3-15S**
403 SS	800 to 8000	750	**DA-21-153-16S**	**DA-21-2-16S**	**DA-21-3-16S**
316 SS	30″ Hg VAC to 75	7	**DA-41-153-26E**	**DA-41-2-26E**	**DA-41-3-26E**
316 SS	5 to 75	3	**DA-41-153-23E**	**DA-41-2-23E**	**DA-41-3-23E**
316 SS	10 to100	7	**DA-41-153-6E**	**DA-41-2-6E**	**DA-41-3-6E**
316 SS	10 to 150	6	**DA-41-153-24E**	**DA-41-2-24E**	**DA-41-3-24E**
316 SS	10 to 300	18	**DA-41-153-9E**	**DA-41-2-9E**	**DA-41-3-9E**
316 SS	30 to 400	30	**DA-41-153-21E**	**DA-41-2-21E**	**DA-41-3-21E**
316 SS	75 to 800	75	**DA-41-153-22E**	**DA-41-2-22E**	**DA-41-3-22E**
316 SS	100 to 1000	100	**DA-41-153-11E**	**DA-41-2-11E**	**DA-41-3-11E**
316 SS	200 to 2500	210	**DA-41-153-13E**	**DA-41-2-13E**	**DA-41-3-13E**

OPTIONS
Weatherproof Enclosure - Series DAW
Note: To order, add "W" to model number after DA or DS, change 1 to 3. **Example:** DAW-33-153-7
Explosion-Proof Enclosure - Series DAH
Suitable for Class I, Groups C and D; NEMA 7; Class II, Groups E, F, G; Class III NEMA 9 and 9A, Division 1.
Note: To order, add "H" to model number after DA or DS. **Example:** DAH-31-153-7
FM Approved
For general purpose and explosion-proof models see compliance.
Note: To order, add "F" to model number after DA, DS, DAH or DSH. **Examples:** DAF-31-153-7 or DAHF-31-153-7
Other Options (Consult Factory)
DPDT switches or other switch types, fixed deadband mercury switch units for low deadband applications, manual reset operation, two-stage operation, acetal bushed movement for applications with high amounts of vibration and/or pulsation, fungus proofing, siphon, diaphragm seals, mounting flange and remote connection.

USA: California Proposition 65
WARNING: This product can expose you to chemicals including Lead, which is known to the State of California to cause cancer and birth defects or other reproductive harm. For more information go to www.P65Warnings.ca.gov.

Dwyer

SERIES SA1100

DIAPHRAGM OPERATED PRESSURE SWITCH

Visible Set point, Adjustable Deadband, Hermetically Sealed Snap Switch, Weatherproof and Explosion-Proof

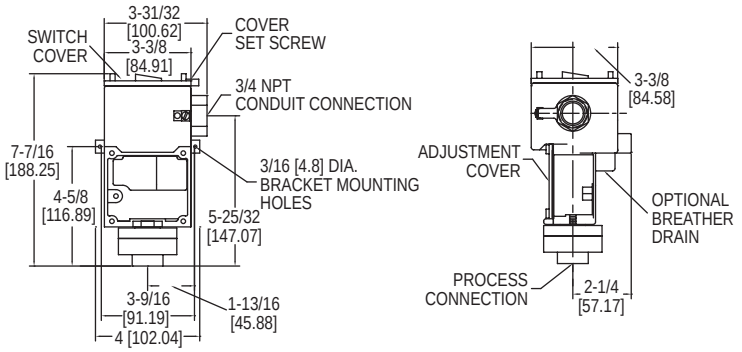

The **Series SA1100 Diaphragm Operated Pressure Switch** is weatherproof and explosion-proof in one economical enclosure. Extremely rugged construction assures excellent reliability in chemical, petroleum and industrial plants. New design also provides burst pressure protection to 3000 psi (206 bar). The rolling diaphragm design maintains a constant effective area to minimize friction. This results in a minimum deadband as low as 5% of full-scale. Since many applications require higher deadbands, the SA1100 includes a separate adjustment of this when necessary. A pump being used to control liquid level in a tank would be a typical situation where this feature would be important. Both set point and deadband adjustments are protected, yet clearly visible behind a clear polycarbonate window and are fully isolated from the electrical components for additional safety. A 7/16″ open-end wrench is the only tool required to change settings. Terminal blocks are provided for switch wiring connections and both internal and external ground screws are included. Standard housing is weatherproof to NEMA standards 1 through 4X and 13; explosion-proof to NEMA 7, Class I, Groups B, C & D; NEMA 9, Class II, Groups E, F & G. Optional construction adds drain to meet NEMA 3R IP54.

BENEFITS/FEATURES

- Explosion-proof and weatherproof housing provides device protection for outdoor use or harsh environment operation
- Burst pressure protection prevents device failure where high-pressure surges may damage device costing down-time and repair/replacement
- Adjustable deadband reduces equipment cycling and potential failure
- Visible set point and deadband adjustments provide an easy and fast check without having to open device causing dangerous conditions to operators

APPLICATIONS

- Chemical, petroleum, food and drug processing industries
- Used indoor, outdoor or in explosion-proof area
- Pump control

SPECIFICATIONS

Wetted Materials: See pressure chamber and diaphragm material in model chart.
***Temperature Limits:** -30 to 180°F (-35 to 82°C) standard; ATEX compliant at Ambient Temperature: -4 to 167°F (-20 to 75°C); Process Temperature: -4 to 167°F (-20 to 75°C).
Pressure Limit: 1200 psig (82.6 bar).
***Enclosure Rating:** Weatherproof and Explosion-proof. Listed with UL and CSA for Class I, Groups B, C and D; Class II Groups E, F, and G. ATEX Compliant CE 2813 Ex II 2 G Ex d IIC T6 Gb Process Temperature 75°C. Weatherproof UL Rated Type 4. Meets NEMA 4X (IP66).
EC-Type Certificate KEMA 04ATEX2186 X
ATEX Standards: EN 60079-0:2009; EN 60079-1:2007
IECEx Certified for Ex d IIC T6 Gb
IEC Standards: IEC 60079-0:2007; IEC 60079-1:2007
IECEx Certificate of Conformity: IECEx DEK 11.0095X
Switch Type: SPDT or DPDT snap switch.
Electrical Rating: See model chart.
Electrical Connections: Screw terminal.
Conduit Connection: 3/4″ female NPT.
Process Connection: 1/2″ female NPT.
Mounting Orientation: Within 20° of vertical.
Set Point Adjustment: Internal 7/16″ hex nuts.
Weight: 3.5 lb (1.6 kg).
Deadband: See deadband chart.
***Agency Approvals:** ATEX, CE, CSA, UL.

*Options that do not have ATEX.

SWITCH DEADBAND CHART

Range Number	Adjustable Operating Range		Approximate Minimum Deadband				Approximate Maximum Deadband	
			Low		High			
	psig	bar	psig	bar	psig	bar	psig	bar
11	10-150	0.7-10	4.0	0.28	7.5	0.52	75	5.2
12	20-250	1.4-17.2	5.0	0.35	12.5	0.86	150	10
13	30-500	2.0-34	12	0.83	45	3.1	300	21

MODEL CHART

Example	SA11	13	E	-A	4	-K	2		SA1113E-A4-K2
Construction	SA11								Series designator, weatherproof NEMA 4X, explosion-proof NEMA 7, 9
Adjustable Pressure Ranges		11							Adjustable range 10 to 150 psig (0.7-10 bar)
		12							Adjustable range 20 to 250 psig (1.4-17.2 bar)
		13							Adjustable range 30 to 500 psig (2.0-34.0 bar)
Circuit (Switch) Options			E						Snap action switch rated 15 A @ 125/250/480 VAC, 1/8 HP @ 125 VAC, 1/4 HP @ 250 VAC, 1/2 A @ 125 VDC resistive, 1/4 A @ 250 VDC resistive
			HS						Hermetically sealed snap action switch rated 5 A @ 125/250 VAC, 5 A resistive @ 30 VDC*
			HG						Hermetically sealed snap action switch with gold contacts rated 1A @ 125 VAC, 1 A resistive @ 30 VDC*
Pressure Chamber Material (Wetted)				A					Aluminum
				S					316 SS
Diaphragm Material (Wetted)					4				Buna-N diaphragm and O-ring
					5				Fluorocarbon diaphragm and O-ring
Circuit (Switch) Type						K			SPDT
						L			DPDT (not available with HS or HG switch options)
Process Connection							2		1/2 inch female NPT
***Options**								AT	ATEX certified construction
								DRAIN	Housing with drain - allows condensate to be drained from inside enclosure (meets NEMA 3R instead of 4X)

*Options that do not have ATEX.
Examples: SA1111E-A4-K2; SA1111E-S5-K2

Dwyer

SERIES 1000W

WEATHERPROOF DIAPHRAGM OPERATED PRESSURE SWITCH

Visible Set point, Fixed Deadband, Pressure Ranges to 1400 psi

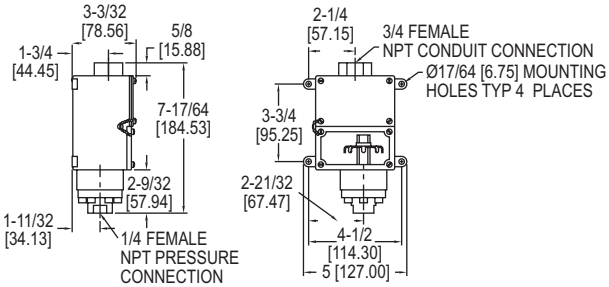

With extremely rugged construction the **Series 1000W Weatherproof Diaphragm Operated Pressure Switch** provides excellent reliability in chemical, petroleum and industrial plants. Bellville spring movement permits mounting of control in any position and helps prevent contact chatter. New design also provides high over-pressure protection. Weatherproof housing is standard.

BENEFITS/FEATURES
- Weatherproof housing is ideal for a wide variety of applications where dust or water is present
- Spring movement design provides for control in any mounting position and prevents contact chatter reducing false or inconsistent switching

APPLICATIONS
- Chemical, petroleum, food and drug processing industries
- Process and Industrial applications

SPECIFICATIONS

Wetted Materials: See pressure chamber and diaphragm material in model chart.
Temperature Limits: -30 to 170°F (-35 to 77°C).
Pressure Limit: 3000 psig (206.8 bar).
Enclosure Rating: Weatherproof, meets NEMA 4X (IP66).
Switch Type: SPDT snap switch.
Electrical Rating: 15 A @ 125/250 VAC resistive.
Electrical Connections: Screw type.
Conduit Connection: 3/4″ female NPT.
Process Connection: 1/4″ female NPT.
Mounting Orientation: Any position.
Set Point Adjustment: Internal thumbwheel.
Weight: 3 lb (1.4 kg).
Deadband: See model chart.
Agency Approvals: UL.

MODEL CHART

Aluminum Pressure Chamber Polyamide Diaph. Model	316 SS Pressure Chamber FEP Diaph. Model	Adjustable Operating Range psig (bar)	Approx.* Deadband (Fixed) psig (bar)
1003W-A1-D	**1003W-B3-D**	5 to 40 (.48 to 2.8)	2 (.14)
1004W-A1-D	**1004W-B3-D**	10 to 70 (.69 to 4.8)	4 (.28)
1005W-A1-D	**1005W-B3-D**	25 to 200 (1.7 to 13.8)	8 (.55)
1006W-A1-D	**1006W-B3-D**	50 to 350 (3.5 to 24.1)	15 (1.0)
1007W-A1-D	**1007W-B3-D**	75 to 550 (5.2 to 37.9)	30 (2.1)
1008W-A1-D	**1008W-B3-D**	100 to 900 (6.9 to 62.1)	50 (3.5)
1009W-A1-D	**1009W-B3-D**	200 to 1400 (13.8 to 96.5)	75 (5.2)

*Deadband 10-15% larger when using 316 SS diaphragm.

Note: To order, change A1 to B2 for 316 SS diaphragm and pressure chamber.
Example: 1003W-B2-D. Values shown are for mid-scale.

SERIES 1000E

EXPLOSION-PROOF DIAPHRAGM OPERATED PRESSURE SWITCH

Visible Set point, Fixed Deadband, Pressure Ranges to 1400 psi

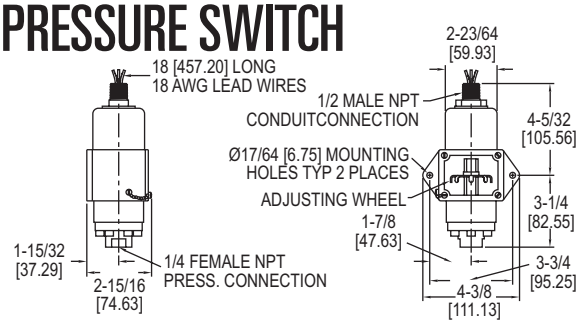

The **Series 1000E Explosion-Proof Diaphragm Operated Pressure Switch** has the same rugged construction as used in Series 1000W plus explosion-proof design are combined in this new unit. UL listed for Class I, Groups A, B, C & D; Class II, Groups E, F & G. Bellville spring movement permits mounting of control in any position and helps prevent contact chatter. High over-pressure protection and vibration resistance are also featured.

BENEFITS/FEATURES
- Weatherproof housing is ideal for a wide variety of applications where dust or water is present
- Spring movement design provides for control in any mounting position and prevents contact chatter reducing false or inconsistent switching
- UL listed to support rigorous process applications and regulations

APPLICATIONS
- Chemical, petroleum, food and drug processing industries
- Process and industrial applications

SPECIFICATIONS

Wetted Materials: See pressure chamber and diaphragm material in model chart.
Temperature Limits: -30 to 170°F (-35 to 77°C).
Pressure Limit: 3000 psig (206.8 bar).
Enclosure Rating: Explosion-proof, UL listed for Class I, Groups A, B, C and D; Class II, Groups E, F, and G.
Switch Type: SPDT snap switch. Hermetically sealed optional.
Electrical Rating: 15 A @ 125/250/480 VAC res., 0.5 A @ 125 VDC, 0.25 A @ 250 VDC.
Wiring Connections: 18 AWG, 18″ (460 mm) color-coded leads: N.O. (yellow), N.C. (black), and common (red).
Conduit Connection: 1/2″ male NPT.
Process Connection: 1/4″ female NPT.
Mounting Orientation: Any position.
Set Point Adjustment: Internal thumbwheel.
Weight: 3 lb (1.4 kg).
Deadband: See model chart.
Agency Approvals: UL.

MODEL CHART

Aluminum Pressure Chamber Polyamide Diaph. Model	316 SS Pressure Chamber FEP Diaph. Model	Adjustable Operating Range psig (bar)	Approx.* Deadband (Fixed) psig (bar)
1003E-A1-J	**1003E-B3-J**	5 to 40 (.48 to 2.8)	2.5 (.17)
1004E-A1-J	**1004E-B3-J**	10 to 70 (.69 to 4.8)	5 (.34)
1005E-A1-J	**1005E-B3-J**	25 to 200 (1.7 to 13.8)	10 (.69)
1006E-A1-J	**1006E-B3-J**	50 to 350 (3.5 to 24.1)	18 (1.2)
1007E-A1-J	**1007E-B3-J**	75 to 550 (5.2 to 37.9)	36 (2.5)
1008E-A1-J	**1008E-B3-J**	100 to 900 (6.9 to 62.1)	60 (4.1)
1009E-A1-J	**1009E-B3-J**	200 to 1400 (13.8 to 96.5)	90 (6.2)

*Deadband 10-15% larger when using 316 SS diaphragm.

Note: To order, change A1 to B2 for 316 SS diaphragm and pressure chamber.
Example: 1003E-B2-J. Values shown are for mid-scale.

Dwyer

SERIES H2

DUAL-ACTION EXPLOSION-PROOF PRESSURE SWITCH

Explosion-proof and Weatherproof Enclosure

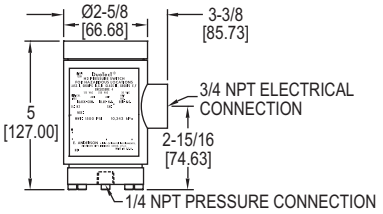

Explosion-Proof, UL & CSA Listed for Class I, Groups B, C & D and Class II, Groups E, F & G. The **Series H2 Dual-Action Explosion-Proof Pressure Switch** is designed for sequencing two different actions as pressure of a liquid or gas increases or decreases. The design consists of two concentric pistons operated by a single diaphragm with one pressure chamber. Each piston actuates a separate switch independent of the other. The switches may be adjusted to operate together, at opposite ends of the range or at two intermediate set points. The threaded top is removed to field adjust or service switches without disturbing electrical or pressure connections. The Duotect® switch is explosion-proof and weatherproof. It can be mounted in any position and is not affected by vibration.

BENEFITS/FEATURES

- Explosion-proof and weather-proof housing provides device protection for outdoor use or harsh environment operation
- UL listed, CSA approved to support rigorous process applications and regulations
- Independent piston action design for either gas or liquid allows switches to active together or independently based on settings
- Mounting in any position and not affected by vibration provides reliable switching for equipment

APPLICATIONS

- Mechanical HVAC or process equipment
- Chemical, petroleum, food and drug processing industries
- Process and Industrial applications

SPECIFICATIONS

Wetted Materials: 316 SS chamber with FEP diaphragm and Buna-N O-ring standard. Fluoroelastomer or EPDM O-ring optional.
Temperature Limit: 275°F (135°C). CSA approved: -20 to 90°C (-4 to 184°F).
Pressure Limit: 1500 psig (103 bar).
Enclosure Rating: UL listed explosion-proof, Class I, Groups B, C, and D. Class II Groups E, F, and G. Meets NEMA 4X (IP66). CSA optional. Class I, Groups B, C & D. Class II, Groups E, F, & G -20°C ≤ Tamb ≤ 75°C T6 [optional -20°C ≤ Tamb ≤ 40°C T5] Type 4.

Switch Type: Two SPDT snap switches.
Electrical Rating: 5 A @ 125/250 VAC. 5 A res., 3 A ind. @ 30 VDC. Gold contacts optional.
Electrical Connections: 18 AWG, 18″ (460 mm) long.
Conduit Connection: 3/4″ female NPT.
Process Connection: 1/4″ female NPT.
Mounting Orientation: Any position.
Set Point Adjustment: Internal nut.
Weight: 2 lb (.9 kg).
Deadband: Approximately 10% of range.
Agency Approvals: CSA, UL.

MODEL CHART

Model	Low Range psig (bar)	High Range psig (bar)
H2S-1	3 to 40 (0.21 to 2.76)	5 to 75 (0.35 to 5.17)
H2S-2	25 to 250 (1.72 to 17.2)	30 to 400 (2.07 to 27.6)
H2S-3	100 to 1000 (6.89 to 68.9)	150 to 1500 (10.3 to 103)

SERIES A1F

OEM PRESSURE SWITCH

Field Adjustable with Weather-Proof Enclosure

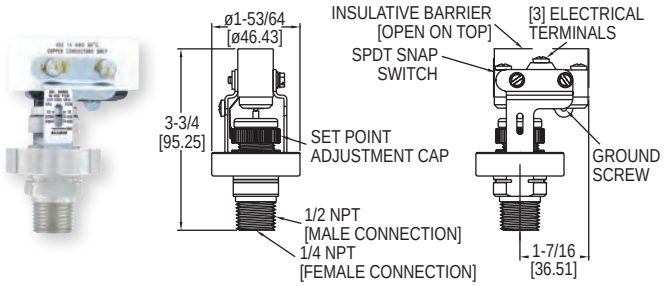

A1F

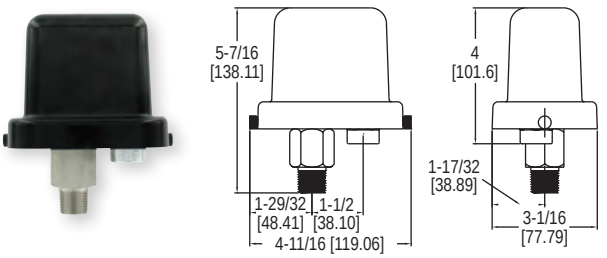

A1F with -PC weatherproof housing

Low cost and precision made, the **Series A1F Low Cost OEM Pressure Switch** is ideal for OEM industrial applications. Wetted materials of 316 SS and fluorocarbon ensure great chemical compatibility with a wide range of process media. The open case style is perfect for panel mounting applications like pump skids. Weatherproof enclosure is available in polycarbonate offering a low cost weatherproof switch. Superior 15 A contact allows direct control of motors or pumps without the use of external relays, a true cost savings. Features include a convenient indicating scale for quick and easy field adjustment.

BENEFITS/FEATURES

- 15 A contact allows direct control reducing costs and reliability by having to introduce additional contacts and relays
- Case style allows use for panel mounting application with optional weather-proof enclosure for use in outdoor environments
- Field adjustable reduces installation time bring application on-line faster
- Wetted material provides support for wider range of process media

APPLICATIONS

- OEM
- Compressors
- Motor control
- Process equipment
- Pump control

SPECIFICATIONS

Service: Compatible liquids and gases.
Wetted Materials: Pressure chamber: 316 SS; Diaphragm: Fluorocarbon.
Temperature Limit: -40 to 175°F (-40 to 80°C).
Pressure Limits: 500 psig (34 bar).
Enclosure Rating: No rating for open construction. Optional -PC enclosure meets NEMA 4X standards.
Switch Type: SPDT snap switch.
Electrical Rating: 15 A @ 120/240/480 VAC; 1/8 HP @ 125 VAC; 1/4 HP @ 250 VAC.
Electrical Connection: Screw terminals.
Process Connection: 1/4″ female NPT and 1/2″ male NPT.
Mounting Orientation: Within 20° of vertical.
Set Point Adjustment: Knurled screw cap with indicating scale.
Deadband: Fixed. See deadband chart.
Weight: 10.5 oz (297 g).
Agency Approvals: cULus.

MODEL CHART

Model	Range psg (bar)	Deadband at Min. Range psg (bar)	Deadband at Max. Range psg (bar)
A1F-O-SS-1-1	2 to 15 (0.14 to 1.03)	2 (0.14)	3 (0.21)
A1F-O-SS-1-2	4 to 75 (0.28 to 5.17)	4 (0.27)	15 (1.0)
A1F-O-SS-1-3	8 to 225 (0.55 to 15.5)	8 (0.55)	25 (1.7)
A1F-O-SS-1-4	16 to 450 (1.1 to 31.0)	15 (1.0)	50 (3.5)

Note: Optional enclosure factory installed. To order, change O to PC.

Example: A1F-PC-SS-1-1

Dwyer

SERIES A1PS/A1VS

ECONOMICAL PRESSURE SWITCH

Vacuum and Compound Ranges Available, Adjustable Set Point

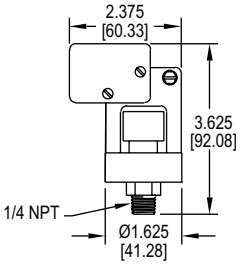

The **Series A1PS/A1VS Economical Pressure Switch** is designed with a 15 Amp SPDT switch for direct control of pumps and motors. Available in pressure, vacuum, or compound ranges, the switches offer a field adjustable set point. Easily adjust the switch by aligning the top of the self locking adjusting nut with the desired setting indicated on the adjacent range scale. Connection is 1/4″ male NPT for quick installation and can be mounted in any position.

BENEFITS/FEATURES
- 15 A contact allows direct control reducing costs and reliability by having to introduce additional contacts and relays
- Field adjustable reduces installation time bring application on-line faster

APPLICATIONS
- OEM
- Compressors
- Process equipment
- Motor control
- Pump control

SPECIFICATIONS

Service: Compatible liquids or gases.
Wetted Materials: Diaphragm: Buna-N; Body with fitting: Zinc alloy, chromate finish.
Temperature Limits: -31 to 185°F (-35 to 85°C).
Pressure Limits: 600 psig.
Vacuum Limits: 29.9″ Hg (vacuum and compound models only).
Switch Type: SPDT snap action.
Electrical Ratings: 15 A (resistive) @ 250 VAC, 1/2 HP @ 250 VAC.
Electrical Connections: Three screw terminals.
Process Connection: 1/4″ male NPT.
Set Point: Field adjustable via knurled screw cap.
Cycling: Not to exceed 1 Hz.
Sensor Element: Diaphragm.
Weight: 7.4 oz (209 g).
Compliance: UL.

MODEL CHART

Model	Set Point Range, (kPa)	Repeatability, (kPa)	Deadband (approx.), (kPa)	Model	Set Point Range, (kPa)	Repeatability, (kPa)	Deadband (approx.), (kPa)
A1PS-14	1.5 to 3.5 psi (10 to 24)	±0.15 psi (1)	0.5 to 1.7 psi (3 to 11)	**A1VS-14**	6-28″ Hg (-20 to -94)	±1.2″ Hg (-4)	3-14″ Hg (-10 to -47)
A1PS-24	3 to 40 psi (21 to 276)	±1.0 psi (7)	2 to 5 psi (14 to 34)	**A1VS-24**	28″ Hg to 3.5 psig (-94 to 24)	±1.2″ Hg (-4), ±0.15 psi (1)	6″ Hg - 1.5 psi (-20 to 10)
A1PS-34	30 to 150 psi (207 to 1034)	±5.0 psi (34)	5 to 30 psi (34 to 207)				
A1PS-44	100 to 500 psi (689 to 3445)	±20.0 psi (138)	30 to 120 psi (207 to 827)				

SERIES APS/AVS

ADJUSTABLE PRESSURE SWITCH

Vacuum and Pressure Ranges, 5 A Switch, Compact Size

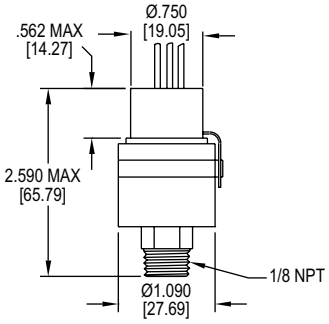

Miniature **Series APS/AVS Adjustable Pressure Switch** offers reliable switching for pressure/vacuum alarm, shutdown or control. The units are readily adjustable throughout their range using the locking adjusting ring and indicating pointer. The body is constructed of stainless steel for durability in harsh environments. Switches include 12″ (30 cm) wire leads sealed with epoxy for additional protection.

BENEFITS/FEATURES
- Field adjustable with simple indicating pointer reduces installation time bring application on-line faster
- Stainless steel construction provides a durable solution in harsh environments

APPLICATIONS
- OEM
- Process equipment
- Compressors
- Motor control
- Pump control

SPECIFICATIONS

Service: Compatible liquids or gases.
Wetted Materials: Capsule: 17-7 PH SS; Fitting: 303 SS.
Temperature Limits: -65 to 225°F (-54 to 107°C), a set point change of up to 2% when used below -10°F (-23°C) or above 125°F (52°C).
Pressure/Vacuum Limits: 150% of range.
Switch Type: SPDT snap action.
Electrical Ratings: 5 A @ 250 VAC, 3 A @ 28 VDC.
Electrical Connections: 3-wire, 20 AWG insulated with PVC, 12″ (30 cm) length.
Process Connection: 1/8″ male NPT.
Set Point: Field adjustable.
Cycling: Not to exceed 20 CPM.
Sensor Element: Capsule.
Weight: 3 oz (85 g).
Compliance: UR.

MODEL CHART

Model	Set Point Range, psi (bar)		Repeatability psi (bar)	Deadband psi (bar)	Model	Set Point Range, ´Hg (cm Hg) VAC		Repeatability ´Hg (cm Hg)
	Decreasing	Increasing				Decreasing	Increasing	
APS-150	0.8 to 28.5 (.06 to 2.0)	1.6 to 30.0 (.11 to 2.1)	±0.6 (.04)	0.8 to 1.3 (.06 to .09)	**AVS-150**	1.6 to 27.1 (4.1 to 68.6)	2.7 to 28.2 (6.9 to 71.6)	±1.2 (3.1)
APS-250	2.0 to 48.0 (.14 to 3.3)	3.0 to 50.0 (.21 to 3.5)	±1.0 (0.7)	1 to 1.7 (.07 to .12)				
APS-350	3.0 to 96.5 (.21 to 6.7)	4.5 to 100 (.31 to 6.9)	±2.0 (.14)	1.6 to 4 (.11 to .28)	**AVS-350**	6.0 to 21.5 (15.2 to 54.6)	8.4 to 28.2 (21.3 to 71.6)	±4.0 (10.2)
APS-450	7.5 to 242 (.52 to 16.7)	9.7 to 250 (.67 to 17.2)	±5.0 (.35)	2.5 to 9 (.17 to .62)				
APS-550	15.0 to 485 (1.0 to 33.4)	20.0 to 500 (1.4 to 34.5)	±10.0 (.69)	5 to 22 (.35 to 1.5)				

Dwyer

SERIES A6

DURABLE PRESSURE SWITCHES

Designed for Extended Duty, Simple and Reliable

A-439 A-440

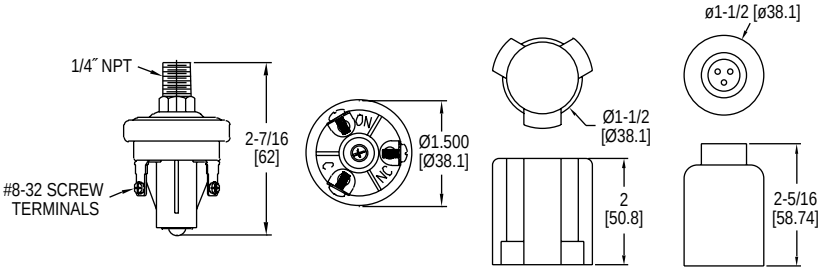

A-439 A-440

Series A6 Durable Pressure Switches have been specifically designed to stand up to extended duty applications. These switches are constructed with a polyimide film diaphragm and are compatible with a variety of fluids. For ease of installation, the switches come with a 1/4″ male NPT process connection and can be mounted in any orientation. The Series A6 pressure switches are compact and have great set point integrity, and feature simple, easy set point field adjustment.

BENEFITS/FEATURES
- High switch cycle means long life for extended duty applications
- Mounting in any position and feature simple makes a reliable switching for equipment and OEM applications

APPLICATIONS
- OEM
- Process equipment
- Process applications

MODEL CHART

Model	Set Point Range psi (bar) NC	Set Point Range psi (bar) NO
A6-153221	0.5 to 1 (0.03 to 0.07)	1.1 to 3.1 (0.08 to 0.21)
A6-253221	1.1 to 3 (0.08 to 0.21)	2.27 to 6.05 (0.16 to 0.42)
A6-353221	3.1 to 7 (0.21 to 0.48)	4.22 to 10.75 (0.29 to 0.74)
A6-453221	8 to 13 (0.55 to 0.90)	12.3 to 17.5 (0.85 to 1.21)
A6-553221	14 to 24 (0.97 to 1.66)	18.6 to 31.8 (1.28 to 2.19)
A6-653221	25 to 50 (1.73 to 3.45)	33.1 to 61 (2.28 to 4.21)
A6-753221	51 to 90 (3.52 to 6.21)	65.6 to 112.3 (4.53 to 7.75)
A6-853221	91 to 150 (6.28 to 10.35)	114.7 to 198.3 (7.94 to 13.68)

SPECIFICATIONS

Service: Air, motor oils, transmission oils, jet fuels, and similar hydrocarbon media. (Not for water use)
Wetted Materials: Base: 304 SS; Diaphragm: Polyamide film.
Temperature Limits: -40 to 248°F (-40 to 120°C).
Pressure Limits: Operating pressure: 150 psi (10.3 bar) for 0.5-24 psi set point ranges, 250 psi (17.2 bar) for 25 to150 psi set point ranges; Proof pressure: 500 psi (34.5 bar); Burst pressure: 750 psi (51.7 bar) for 0.5-24 psi set point ranges, 1250 psi (86.2 bar) for 25-150 psi set point ranges.
Enclosure Rating: General purpose or with cover: IP65 - weatherproof.
Repeatability: ±10% of set point.
Set Point Tolerance: ±15% of range.
Switch Type: 1 SPST NO, 1 SPST NC. NO and NC switch independent from each other.
Electrical Ratings: Resistive: 15 A @ 6 VDC, 8 A @ 12 VDC, 4 A @ 24 VDC; Inductive: 1 A @ 120 VAC, 0.5 A @ 240 VAC.
Electrical Connections: #8-32 screw terminals.
Process Connection: 1/4″ NPT male.
Mounting Orientation: Switch can be installed in any position.
Set point Adjustment: Screw.
Weight: 0.13 lb (0.06 kg).

ACCESSORIES

Model	Description
A-439	Weatherproof IP65 cover
A-440	Weatherproof IP65 with fly-wire holes

USA: California Proposition 65
⚠ **WARNING:** This product can expose you to chemicals including Lead, which is known to the State of California to cause cancer and birth defects or other reproductive harm. For more information go to www.P65Warnings.ca.gov.

SERIES AP

FM APPROVED UL LISTED

DIAPHRAGM OPERATED PRESSURE SWITCH

Visible Set point Adjustment, Compact

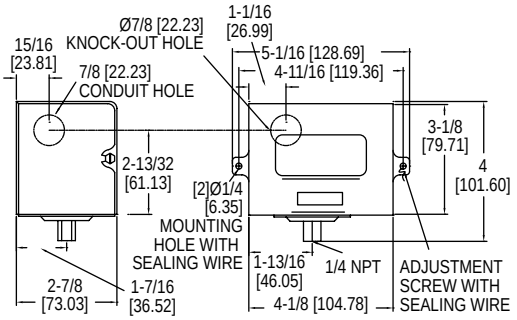

Reliable and convenient, the **Series AP Diaphragm Operated Pressure Switch** is a compact switch for instrument air or other low pressure applications. Visible set point and external adjustment add convenience. Used on air, non-corrosive gas or liquid service compatible with wetted parts. Units are available in weather-proof and explosion-proof housing.

BENEFITS/FEATURES
- Explosion-proof and weatherproof housing provides device protection for outdoor use or harsh environment operation
- External switch set point adjustment reduces set-up time

APPLICATIONS
- Low pressure applications
- Instrument air

SPECIFICATIONS

Wetted Materials: Nylon reinforced Buna-N and steel. PTFE and 316 SS optional.
Temperature Limits: -30 to 150°F (-35 to 66°C).
Pressure Limit: See model chart.
Enclosure Rating: General purpose. Weatherproof and explosion-proof optional.
Switch Type: SPDT mercury switch or SPDT snap switch. Other switch types available.
Electrical Rating: Mercury switch: 4 A @ 120 VAC/DC, 2 A @ 240 VAC/DC; Snap switch: 15 A @ 120 VAC, 8 A @ 240 VAC, 0.5 A @ 120 VDC, 0.25 A @ 240 VDC.
Electrical Connections: Screw terminal.
Conduit Connection: 7/8″ (22.23 mm) hole for 1/2″ (12.7 mm) conduit hub.
Process Connection: 1/4″ female NPT.
Mounting Orientation: Vertical for mercury switch models, any position for snap switch models.
Set Point Adjustment: External screw.
Weight: General purpose: 2 lb (0.9 kg).
Deadband: See model chart.
Compliance: FM, UL. For FM consult factory.

MODEL CHART

Model	Switch* Type SPDT	Ranges	Switch Deadband Low	Switch Deadband High	Max. Press. psig(bar)
AP-153-33	Mercury	10 in VAC to 50 in w.c. (2.5 to 12.4 kPa)	5 in w.c. (1.2 kPa)	6 in w.c. (1.49 kPa)	15 (1.03)
AP-153-37	Mercury	1 to 30 psig (.07 to 2.1 bar)	0.4 psig (0.03 bar)	0.75 psig (0.05 bar)	60 (4.14)
AP-153-39	Mercury	10 to 125 psig (.69 to 8.6 bar)	2 psig (0.14 bar)	6 psig (0.04 bar)	160 (11.0)
AP-7021-153-33	Snap	10 in VAC to 50 in w.c. (2.5 to 12.4 kPa)	8 in w.c. (2.0 kPa)	10 in w.c. (2.49 kPa)	15 (1.03)
AP-7021-153-37	Snap	1 to 30 psig (.07 to 2.1 bar)	0.75 psig (0.05 bar)	1.5 psig (0.10 bar)	60 (4.14)
AP-7021-153-39	Snap	10 to 125 psig (.69 to 8.6 bar)	3 psig (0.21 bar)	7 psig (0.48 bar)	160 (11.0)

*Mercury switch units are not CE approved.

Dwyer

SERIES A2

SUBMINIATURE PRESSURE SWITCH

Field Adjustable

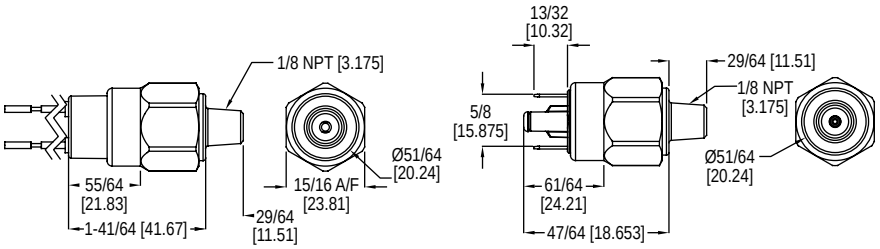

Designed for OEM applications, the **Series A2 Subminiature Pressure Switch** is economical and is equipped with high proof pressure capabilities for demanding applications. The A2 is available with either spade terminals or flying leads (submersible). Switches with spade terminals can be easily adjusted in the field.

BENEFITS/FEATURES
- High-proof pressure to meet application demands
- Easy adjustment reduces installation and service times

APPLICATIONS
- OEM

SPECIFICATIONS

Service: Compatible liquids and gases.
Wetted Materials: Polyamide film and brass.
Temperature Limits: -40 to 230°F (-40 to 110°C).
Pressure Limits: 350 psi (24 bar).
Enclosure Rating: IP69 (flying lead models only).
Repeatability: ±3% of highest set point at 70°F (21°C).
Switch Type: SPST, 100 VA, 42 VDC.
Electrical Connection: 1/4″ (6.3 mm) spade terminals or flying leads.
Process Connection: 1/8″ male NPT, or 1/4″ male NPT.
Weight: 0.15 lb (0.07 kg).
Deadband: <10% of actuation point.
Compliance: CE.

MODEL CHART

Model	Range psi (bar)	Electrical Connection	NO/NC	Model	Range psi (bar)	Electrical Connection	NO/NC
A2-5801	2 to 20 (0.14 to 1.4)	Spade terminals	NO	**A2-6811**	15 to 100 (1.03 to 6.9)	Spade terminals	NC
A2-5803	2 to 20 (0.14 to 1.4)	Flying leads	NO	**A2-6813**	15 to 100 (1.03 to 6.9)	Flying leads	NC
A2-5811	2 to 20 (0.14 to 1.4)	Spade terminals	NC	**A2-7801**	50 to 150 (3.5 to 10.3)	Spade terminals	NO
A2-5813	2 to 20 (0.14 to 1.4)	Flying leads	NC	**A2-7803**	50 to 150 (3.5 to 10.3)	Flying leads	NO
A2-6801	15 to 100 (1.03 to 6.9)	Spade terminals	NO	**A2-7811**	50 to 150 (3.5 to 10.3)	Spade terminals	NC
A2-6803	15 to 100 (1.03 to 6.9)	Flying leads	NO	**A2-7813**	50 to 150 (3.5 to 10.3)	Flying leads	NC

USA: California Proposition 65
⚠**WARNING:** This product can expose you to chemicals including Lead, which is known to the State of California to cause cancer and birth defects or other reproductive harm. For more information go to www.P65Warnings.ca.gov.

SERIES MVS

MINIATURE VACUUM SWITCH

SPDT N/O or N/C Switch, Adjustable Set Point, Ideal for OEM's

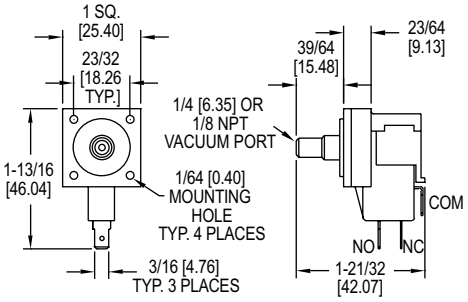

Compact, lightweight, and adjustable, the **Series MVS Miniature Vacuum Switch** is specially designed for OEM applications. This low cost switch has a minimum life expectancy of 10 million cycles and has an extremely fast response time. Typical applications for the MVS are HVAC, home appliance, dairy systems, medical, office equipment, and pump control.

BENEFITS/FEATURES
- High switch cycle means long life for extended duty applications

APPLICATIONS
- OEM
- HVAC applications
- Medical equipment
- Dairy equipment
- Pump control

SPECIFICATIONS

Service: Air or compatible fluids.
Wetted Materials: Enclosure: Polycarbonate; Diaphragm: Polyurethane.
Temperature Limits: 40 to 150°F (4 to 66°C).
Pressure Limits: Up to max. range.
Repeatability: ±20%.
Switch Type: SPDT normally open or normally closed.
Electrical Rating: Range 3 to 8 in w.c.: 3 A, 125/250 VAC; Range 9 to 80 in w.c.: 10 A, 125/250 VAC; Range 81 to 330 in w.c.: 15 A, 125/250 VAC.
Contacts: Silver with brass terminals.
Electrical Connections: Terminals 0.187″ x 0.20″ spade for use with quick disconnects.
Process Connections: Models MVS 1 to MVS 3: Smooth port 0.25″ diameter; Models MVS 4 to MVS 6: 1/8″ male NPT.
Mounting: Use #2 screws through eyelets.
Weight: Less than 0.671 oz (19 g.)
Compliance: cULus.

MODEL CHART

	Set Point in w.c. (mbar)	
Model	**Minimum**	**Maximum**
MVS-1	3 (8)	8 (20)
MVS-2	9 (21)	80 (199)
MVS-3	81 (200)	330 (822)
MVS-4*	3 (8)	8 (20)
MVS-5*	9 (21)	80 (199)
MVS-6*	81 (200)	330 (822)

*Models have 1/8″ male NPT process connections.

Dwyer

SERIES CXA

WATER PUMP PRESSURE SWITCH

Simple, Reliable, Adjustable Set Point and Deadband

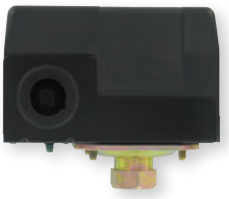

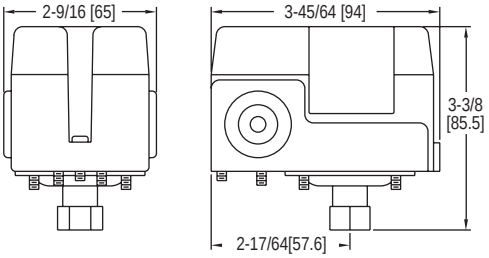

The **Series CXA Water Pump Pressure Switch** has been proven reliable for controlling automatic water systems. These switches are very popular for use on water well pumps and pumping systems. The set point and dead-band are both easily adjustable via screws inside the cover. For ease of installation, the switches come with a 1/4″ female NPT process connection and can be mounted in any orientation. The series CXA's simple design makes it a great switch for an installer at any skill level.

BENEFITS/FEATAURES
- The set point and deadband are both easily adjustable reducing time to install and operation
- Mounting in any position and feature simple makes a reliable switch that can be installed by any skill level

APPLICATIONS
- Electric water pumps
- Water system applications
- Well pumps
- Pumping systems

SPECIFICATIONS

Service: Compatible liquids and gases.
Wetted Materials: Silicone, steel, and SS.
Temperature Limits: 140°F (60°C).
Pressure Limits: See model chart.
Enclosure Rating: General purpose.
Repeatability: ±5 psig (±0.3 bar).
Switch Type: DPST snap action (see model chart).
Electrical Ratings: 20 A @ 120 VAC, 12 A @ 240 VAC, 9.6 A @ 240 VAC (3 phase), 8.6 A @ 32 VDC, 3.1 A @ 120 VDC, 1.6 A @ 240 VDC.
Electrical Connections: Screw terminal.
Conduit Connection: 7/8″ hole for 1/2″ conduit hub (2 places).
Process Connection: 1/4″ female NPT.
Mounting Orientation: Switch can be installed in any position.
Set Point Adjustment: Internal screws.
Deadband: See model chart.
Weight: 0.75 lb (0.34 kg).
Agency Approvals: CE.

MODEL CHART

Model	Switch Type	Range psig (bar)	Approx. Adjustable Deadband psig (bar)	Max. Pressure psig (bar)
CXA-S1	NC	15 to 80 (1.0 to 5.5)	15 to 30 (1.0 to 2.1)	129 (8.9)
CXA-S2	NC	30 to 100 (2.1 to 6.9)	20 to 35 (1.4 to 2.4)	179 (12.3)
CXA-S3	NC	35 to 150 (2.4 to 10.3)	30 to 40 (2.1 to 2.8)	204 (14.1)
CXA-R1	NO	15 to 80 (1.0 to 5.5)	15 to 30 (1.0 to 2.1)	129 (8.9)
CXA-R2	NO	30 to 100 (2.1 to 6.9)	20 to 35 (1.4 to 2.4)	179 (12.3)
CXA-R3	NO	35 to 150 (2.4 to 10.3)	30 to 40 (2.1 to 2.8)	204 (14.1)

SERIES 681

SANITARY PRESSURE TRANSMITTER

No Liquid Fill Diaphragm, Sanitary Clamp Fitting

CALIBRATION SERVICES AVAILABLE

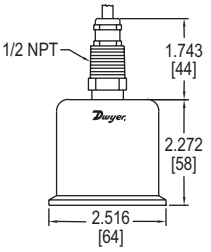

The **Series 681 Sanitary Pressure Transmitter** is designed to meet 3A standards for applications in food, dairy, beverage and pharmaceutical processing, liquid level control, and sanitary pipelines. The unit is fully sealed to withstand high pressure wash-down in Clean-in-Place (CIP) and Sterilize-in-Place (SIP) installations. The Series 681 is designed with a unique, no liquid fill diaphragm and a sanitary clamp pressure fitting for easy installation with negligible clamping effect. A conduit fitting, shielded cable with vent tube and sealed screws for zero and span adjustment combine to make the Series 681 completely watertight.

BENEFITS/FEATURES
- Fully sealed to withstand Clean-in-Place and Sterilize-in-Place installations supports regulatory conditions for sanitary processes
- Sanitary clamp fitting makes for easy installation

APPLICATIONS
- Sanitary process applications
- Food and beverage processing
- Water processing
- Dairy processing
- Pharmaceutical processing

SPECIFICATIONS

Service: Compatible liquids and gases.
Wetted Parts: 316L SS.
Accuracy: ±.20% FS (includes non-linearity, hysteresis and non-repeatability).
Temperature Limits: -40 to 260°F (-40 to 125°C) 10 to 90% RH, non-condensing.
Pressure Limits: See table.
Compensated Temperature Range: 20 to 180°F (-7 to 80°C).
Thermal Effect: Zero and span shift: ±2.0% FS/100°F.
Power Requirements: 9-30 VDC.
Output Signal: 4-20 mA, 2-wire.
Zero and Span Adjustment: ±0.5 mA, non-interactive.
Response Time: ≤ 10 ms.
Loop Resistance: 800 Ω.
Electrical Connections: 1/2″ conduit fitting and strain relief with 15 ft (4.5 m) cable.
Process Connection: 2″ or 1-1/2″ sanitary clamp fitting male NPT.
Clamping Effect: Zero and span shift: ±0.15% FS for ranges up to 30 psi; ±0.25% FS for ranges >30 psi.
Weight: 8 oz (227 g).

MODEL CHART

Model	Range	Overpressure	Sanitary Clamp Connection
681-02	0 to 1 psi	50 psi	2″
681-12	0 to 2 psi	100 psi	2″
681-42	0 to 15 psi	150 psi	2″
681-52	0 to 30 psi	150 psi	2″
681-62	0 to 60 psi	180 psi	2″

OPTIONS

Use order code:	Description
NISTCAL-PT1	NIST traceable calibration certificate for pressure transmitters

OEM PRESSURE TRANSMITTER

Excellent Pressure Surge Resistance, Fast Response

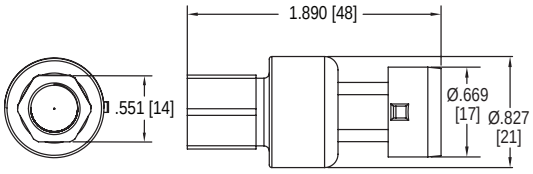

The **Series 638R OEM Pressure Transmitter** is a high-accuracy, low-cost pressure transmitter designed for industrial equipment markets. This transmitter is designed to work with all liquids and gases that are compatible with the wetted materials. The series features a number of configurable options including wetted materials, process connections, and pressure ranges. Whether the application involves aggressive fluids or extreme temperatures, this transmitter is a great option for most applications.

BENEFITS/FEATURES

- High-accuracy pressure transmitter with a fast response time and excellent pressure surge protection
- Suitable for use in applications with extreme temperatures and aggressive fluids
- Highly configurable cost-effective transmitter with a compact design

APPLICATIONS

- HVAC equipment
- Refrigeration equipment
- Refrigerant recovery
- Leak detection systems
- Building pressurization
- Isolated diaphragm packages
- Closed loop hydraulics
- Paint and agriculture spraying

SPECIFICATIONS

Service: Compatible gases and liquids.
Wetted/Housing Materials: Brass, aluminum, or 316 SS.
Accuracy: ±1.2% FS (includes linearity, hysteresis, repeatability and calibration); Static error band @ 25°C, 5.0 VDC supply voltage.
Cycle Life: 10 million FS cycles.
Storage Temperature: -40 to 302°F (-40 to 150°C).
Operating Temperature: -40 to 275°F (-40 to 135°C).
Pressure Limit: see model chart.
Thermal Effect: ± 0.013% FS/°C.
Power Supply: 5 VDC.
Output Signal: 0.5-4.5 VDC ratiometric.
Response Time: 10 ms typical.
Output Load: 20 kΩ min. (pull-up or pull-down).
Current Consumption: < 10 mA @ 5.5 VDC (8.5 mA typical).
Electrical Connection: Packard connection.
Process Connection: 7/16″ 20 UNF (female) or 1/4″ NPT (female).
Enclosure Rating: IP67 (with IP67 plug).
Mounting Orientation: Mount in any position.
Weight: 1.1 oz (30 g).
Agency Approvals: CE.

MODEL CHART

Example	638R	-00	-P2	-E1	-S2	-SS	638R-00-P2-E1-S1-SS
Series	638R						OEM pressure transmitter
Pressure Range		00 01 02 03 04 05 06					0 to 75 psia (0 to 5.2 bar(a)) 0 to 150 psia (0 to 10.3 bar(a)) 0 to 200 psia (0 to 13.8 bar(a)) 14.5 to 265 psia (1 to 18.3 bar) 14.5 to 315 psia (1 to 21.7 bar(a)) 14.5 to 515 psia (1 to 35.5 bar(a)) 14.5 to 667 psia (1 to 46 bar(a))
Process Connection			P1 P2				7/16″ 20 UNF (female) 1/4″ NPT (female)
Electrical Connection				E1			Packard connection
Electrical Output					S2		0.5-4.5 V ratiometric
Housing Material						AL BR SS	Aluminum Brass 316L SS

Dwyer

SERIES 682

INDUSTRIAL PRESSURE TRANSMITTER

±0.13% Full-Scale Accuracy, External Adjustments, 4-20 mA Output

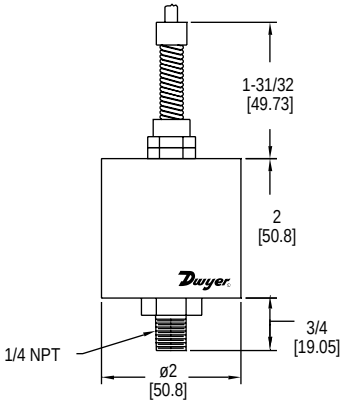

The **Series 682 Industrial Pressure Transmitter** is designed to withstand environmental effects such as shock, vibration, temperature, and EMI/RFI. The electronics and capacitive sensor are packaged in a welded stainless steel housing and meets NEMA 4 (IP65) protection ratings.

BENEFITS/FEATURES

- Weather-proof welded housing provides device protection for outdoor use or harsh environment operation
- Not affected by environmental effects such as temperature, shock, vibration, and EMI/RFI provides reliable switching for equipment
- External span and zero adjustments reduce installation and service time

APPLICATIONS

- Off-road equipment
- Compressor control
- Industrial refrigeration
- Hydraulic systems
- Industrial engines

SPECIFICATIONS

Service: Compatible liquids and gases.
Wetted Parts: 17-4 PH SS.
Accuracy: ±.13% FS (includes non-linearity, hysteresis and non-repeatability).
Temperature Limits: -40 to 260°F (-40 to 125°C) 10 to 90% RH, non-condensing.
Pressure Limit: See table.
Compensated Temperature Range: -4 to 176°F (-20 to 80°C).
Thermal Effect: Zero shift: 1.0% FS/100°F span shift: ±1.5% FS/100°F.
Power Requirements: 9-30 VDC. **Output Signal:** 4-20 mA, 2-wire.
Zero and Span Adjustment: ±0.5 mA, non-interactive.
Response Time: 5 ms.
Loop Resistance: 800 Ω.
Electrical Connections: 2 ft (51 cm) multiconductor cable.
Process Connection: 1/4″ male NPT.
Shock: 200 g operating.
Vibration: 20 g 50-2000 Hz.
Weight: 8 oz (227 g).

MODEL CHART

Model*	Range	Overpressure	Model*	Range	Overpressure
682-1	0 to 50 psi	150 psi	**682-3**	0 to 250 psi	500 psi
682-2	0 to 100 psi	300 psi	**682-4**	0 to 500 psi	1000 psi

*Units calibrated in bar also available. Consult factory.

OPTIONS

Use order code:	Description
NISTCAL-PT1	NIST traceable calibration certificate

Dwyer

SERIES 673

PRESSURE TRANSMITTER

±0.25% Full-Scale Accuracy, 4-20 mA Signal, Ranges to 1000 psi

CALIBRATION SERVICES AVAILABLE

Cable anchor

Conduit version

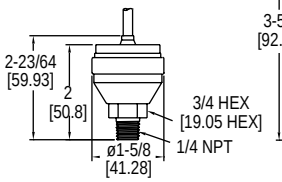

Cable anchor

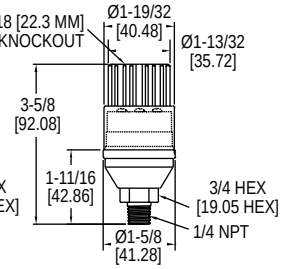

Conduit version

The low cost **Series 673 Pressure Transmitter** is a fixed range transmitter designed for harsh environments and suitable for high shock and vibration applications. Constructed of stainless steel, the Series 673 provides a 4-20 mA output signal with 0.25% accuracy. Use the Series 673 in industrial OEM equipment, hydraulic systems, HVAC equipment, industrial engines and compressor control.

BENEFITS/FEATURES

- High-shock and vibration resistant insures stability in controlling pressure for process applications

APPLICATIONS

- OEM
- Industrial engines
- Hydraulic systems
- Compressors
- HVAC equipment

MODEL CHART

Model	Range psi	Model	Range psi
673-1	0 to 1	**673-1C**	0 to 1
673-2	0 to 2	**673-2C**	0 to 2
673-3	0 to 5	**673-3C**	0 to 5
673-4	0 to 10	**673-4C**	0 to 10
673-5	0 to 25	**673-5C**	0 to 25
673-6	0 to 50	**673-6C**	0 to 50
673-7	0 to 100	**673-7C**	0 to 100
673-8	0 to 200	**673-8C**	0 to 200
673-9	0 to 500	**673-9C**	0 to 500
673-10	0 to 1000	**673-10C**	0 to 1000
673-14	-14.7 to 100	**673-14C**	-14.7 to 100

Note: The model numbers followed by a "C" represent the conduit version, which is hand tightened to ensure proper electrical seal.

SPECIFICATIONS

Service: Liquid, gas, or vapor.
Wetted Materials: 17-4 PH SS.
Accuracy: ±0.25% BFSL (RSS), (includes non-linearity, hysteresis and non-repeatability).
Temperature Limits: -40 to 185°F (-40 to 85°C).
Compensated Temperature Limits: -40 to 176°F (-40 to 80°C).
Pressure Limits: 2 x max range.
Thermal Errors: Zero: ±3.6% FS/100°F(100°C); Span: ±2.7% FS/100°F(100°C).
Power Requirements: 9-30 VDC.
Output: 4-20 mA, 2-wire.
Zero and Span Adjustment: Fixed.
Response Time: 5 ms.
Loop Resistance: 0 to 800 Ω.
Stability: 0.5% FS/year.
Shock: 200 g.
Vibration: 20 g.
Electrical Connections: 2 ft (61 cm) multiconductor cable.
Conduit Connection: 1/4˝-18 (22.3 mm) knockout.
Enclosure: SS and Valox.
Weight: 2.3 oz (65 g).

OPTIONS

Use order code:	Description
NISTCAL-PT1	NIST traceable calibration certificate

SERIES FDT

FLUSH DIAPHRAGM TRANSMITTER

Non-Liquid Filled, ±0.5% Full-Scale Accuracy, Stainless Steel Wetted Parts

CALIBRATION SERVICES AVAILABLE

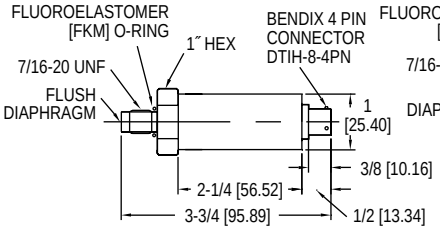

FDT-V

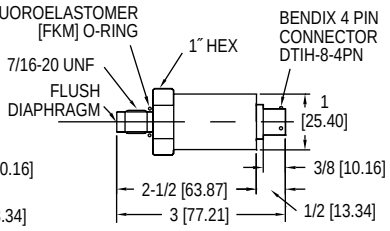

FDT-A

The **Series FDT Flush Diaphragm Transmitter** is designed for highly cyclical conditions. Flush sensor feature prevents any potential inaccuracies due to build-up or blockage which is a typical problem found in most non-flush transmitter sensors.

BENEFITS/FEATURES

- Performs well in high cyclical environments with the presence of water-hammering or spiking for long service life

APPLICATIONS

- OEM
- Hydraulic systems
- Process systems

MODEL CHART

Example	FDT	-A	-01	-NPT	FDT-A-01-NPT
Series	FDT				Flush diaphragm transmitter
Output		A V			4-20 mA 0-5 VDC
Range			01 02 03 04 06 11 12 15		100 psi 150 psi 200 psi 300 psi 500 psi 1000 psi 2000 psi 5000 psi
Options				NPT C08	1/4˝ male NPT 0.25% FS accuracy

Note: Contact factory for additional range availability.

SPECIFICATIONS

Service: Compatible liquids and gases, adhesives, slurries, materials that can harden, or where a pressure cavity is not desired.
Wetted Materials: 316 and 15-5 SST.
Accuracy: ±0.5% FS (includes non-linearity, hysteresis, and repeatability).
Stability: ±0.25% FS per year.
Temperature Limits: -40 to 200°F (-40 to 93°C).
Compensated Temperature Limits: 0 to 170°F (-18 to 77°C).
Pressure Limit: 150% FS; Burst: 200% FS.
Thermal Effect: ±1.5% FSO over compensated range.
Power Requirements: 8-38 VDC.
Output Signal: FDT-A: 4-20 mADC; FDT-V: 0-5 VDC.
Response Time: <1 ms.
Loop Resistance: FDT-A: 0 to 1.5 Ω; FDT-V: 100 Ω.
Electrical Connections: 4-pin.
Process Connection: 7/16-20 UNF male flush diaphragm. Optional 1/4˝ male NPT.
Enclosure Rating: NEMA 4X (IP66).
Mounting Orientation: Mount in any position.
Weight: 2 oz (57 g).
Compliance: CE.

OPTIONS

Use order code:	Description
NISTCAL-PT1	NIST traceable calibration certificate

ACCESSORIES

Model	Description
A-168	Mating connector for 4 pin M-12

Dwyer

SERIES 626 & 628

INDUSTRIAL PRESSURE TRANSMITTERS

Complete Offering of Ranges, Connections and Outputs

CALIBRATION SERVICES AVAILABLE

626/628 pressure transmitters with general purpose housing (-GH)

626/628 pressure transmitters with conduit box housing (-CB) and LCD display

VIDEO ONLINE

***Please see our website for dimensional drawings.**

The **Series 626 Industrial Pressure Transmitters** possess a highly precise 0.25% full-scale accuracy piezo-resistive sensor contained in a compact, rugged, NEMA 4X (IP66) stainless steel general purpose housing or cast aluminum conduit housing. The **Series 628 Industrial Pressure Transmitters** are ideal for OEMs with 1% full-scale accuracy sensors. The corrosion resistant 316L stainless steel wetted parts allow the Series 626 and 628 transmitters to measure the pressure in a multitude of processes from hydraulic oils to chemicals. The Series 626 and 628 are available in absolute and gage pressure ranges with a variety of optional outputs, process connections and electrical terminations to allow you to select the right transmitter for your application.

BENEFITS/FEATURES

- NEMA 4X rated enclosure provides protection in harsh environments permitting outdoor monitoring or in areas where dust and particulate matter exists
- Robust 316L SS oil filled sensor provides shock and vibration resistance insuring stability in controlling pressure for process applications
- A wide range of models and connections that can meet pressure measurement specifications from low to very high

APPLICATIONS

- Compressors
- Pumping systems
- Irrigation equipment
- Hydraulic
- Industrial process monitoring

SPECIFICATIONS

Service: Compatible gases and liquids.
Wetted Materials: Type 316L SS.
Accuracy: 626: 0.25% FS; 626: 0.20% RSS; 628: 1.0% FS; 628: 0.5% RSS; 626 Absolute Ranges: 0.5% FS; 626 absolute ranges: 0.30% RSS. (Includes linearity, hysteresis, and repeatability.)
Temperature Limit: 0 to 200°F (-18 to 93°C).
Compensated Temperature Range: 0 to 175°F (-18 to 79°C).
Thermal Effect: ±0.02% FS/°F (includes zero and span).
Pressure Limits: See table.
Power Requirements: 10-30 VDC (for 4-20 mA, 0-5, 1-5, 1-6 VDC outputs); 13-30 VDC (for 0-10, 2-10 VDC outputs); 5 VDC ±0.5 VDC (for 0.5-4.5 VDC ratio-metric output), 10-35 VDC (for 4-20 mA with -CB option); 13-35 VDC or isolated 16-33 VAC (for selectable output with -CB option).
Output Signal: 4-20 mA, 0-5 VDC,1-5 VDC, 0-10 VDC, or 0.5-4.5 VDC, or selectable 0-5, 1-5, 0-10, 2-10 VDC for -CB option.
Response Time: 300 ms.
Loop Resistance: 0-1000 Ω max. R max = 50 (Vps-10) Ω (4-20 mA output), 5 KΩ min (0-5, 1-5, 0.5-4.5 VDC output), 15 KΩ min (1-6, 0-10, 2-10 VDC output).
Current Consumption: 38 mA maximum (for 4-20 mA output); 10 mA maximum (for 0-5, 1-5, 1-6, 0-10, 2-10, 0.5-4.5 VDC output); 140 mA maximum (for all 626/628/629-CH with optional LED).
Electrical Connections: Model dependent options: Wire end, Hirschman DIN EN 175801-803-C, Packard, Deutsch, M12.
Process Connection: Model dependent options: 1/8″, 1/4″, 1/2″ male NPT; 1/4″ female NPT; 1/4″ male or female BSPT; 1/8″ or 1/4″ male BSPP ISO 1179; 1/4″ female SAE valve depressor.
Enclosure Rating: NEMA 4X (IP66).
Mounting Orientation: Mount in any position.
Weight: 10 oz (283 g).
Compliance: CE, Optional: NSF/ANSI 61/372, ANSI/UL 218, ANSI/UL 508, NEPA 20.

INDUSTRIAL PRESSURE TRANSMITTERS

Complete Offering of Ranges, Connections and Outputs

CALIBRATION SERVICES AVAILABLE

MODEL CHART

Example	626	-05	-GH	-P3	-E1	-S1	-NIST	626-05-GH-P3-E1-S1-NIST
Accuracy	626 628							0.25% FS accuracy 1.0% FS accuracy
Range		00 01 02 03 04 05 06 07 08 09 10 11 12 13 14 22 15 16 18 67 71 75 81						0 to 15 psia⑤ 0 to 30 psia⑤ 0 to 50 psia⑤ 0 to 100 psia⑤ 0 to 200 psia⑤ 0 to 300 psia⑤ 0 to 5 psi 0 to 15 psi 0 to 30 psi 0 to 50 psi 0 to 100 psi 0 to 150 psi 0 to 200 psi⑥ 0 to 300 psi⑥ 0 to 500 psi⑥ 0 to 600 psi⑥ 0 to 1000 psi 0 to 1500 psi⑥ 0 to 3000 psi 0 to 0.5 bar 0 to 2.5 bar 0 to 10 bar 0 to 40 bar
Housing			CB GH					Conduit box housing General purpose housing
Process Connection				P1 P2 P3 P5 P9				1/4″ male NPT 1/4″ female NPT 1/4″ male BSPT 1/4″ female SAE with refrigerant valve depressor① 1/2″ male NPT①
Electrical Connection					E1 E3 E4 E5 E6 E8 E9			Cable gland with 3´ of prewired cable Cable gland with 9´ of prewired cable DIN EN 175801-803-C① 1/2″ female NPT conduit② M-12 4 pin connector-UL④ Packard connector M-12 4 pin connector non-UL
Signal Output						S1 S2 S4 S5 S7 S8		4-20 mA 1-5 VDC 0-5 VDC 0-10 VDC 0.5-4.5 VDC①③ Selectable 0-5, 1-5, 0-10, 2-10 VDC②
Options							AT LCD NIST NW	Aluminum tag LCD indication② NIST traceable certificate NSF/ANSI 61/372 certified

①Available with -GH housing only, NEMA 4 (IP65). ②Available with -CB housing only. ③Power requirement: 5 VDC ±10%.
④Available with -GH housing only. ⑤Absolute ranges for 626 are 0.5% FS accuracy and for 628 are 2% FS accuracy
⑥ UL listed pump controllers, fire-component on 4-20 mA "-S1" signal output models only - See online certificate for information and limitations.

Note: Bar and absolute ranges are only available with -GH housing.

PRESSURE LIMITS

Range Number	Pressure Range	Maximum Pressure (psig)	Over Pressure (psig)	Range Number	Pressure Range (psig)	Maximum Pressure (psig)	Over Pressure (psig)
00	0 to 15 psia	30	45	11	0 to 150 psig	300	750
30	15 to 0 psia	30	45	12	0 to 200	400	1000
06	0 to 5 psig	10	50	13	0 to 300	600	1500
07	0 to 15 psig	30	150	14	0 to 500	1000	2500
08	0 to 30 psig	60	300	15	0 to 1000	2000	5000
09	0 to 50 psig	100	300	16	0 to 1500	3000	5000
10	0 to 100 psig	200	500	18	0 to 3000	6000	7500

ACCESSORIES

Model	Description
A-164	16.4´ (5 m) cable with M-12 4-pin female connector
A-62X-LCD	Field-upgradeable LCD
A-960	3´ packard cable
A-961	9´ packard cable
A-962	20´ packard cable

Dwyer
SERIES 636

FIXED RANGE PRESSURE TRANSMITTER

Stainless Steel, Explosion-Proof, Accuracy ±0.30%, 4-20 mA or 1-5 VDC Signal

CALIBRATION SERVICES AVAILABLE

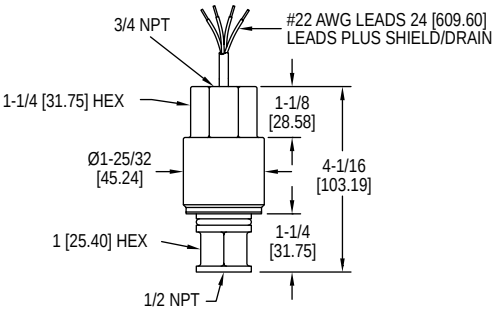

The **Series 636 Fixed Range Pressure Transmitter** is a low cost, fixed range, stainless steel transmitter with ±0.30% accuracy. It is designed to continuously measure pressure for years in even the toughest environmental and media conditions. Transmitters are explosion-proof, (FM approved) and meet NACE standards for off-shore applications.

BENEFITS/FEATURES
- Long service life and lower cost to maintain reduces total cost of ownership
- Explosion-proof housing for use in applications where protection of process and personnel is needed

APPLICATIONS
- Off-shore
- Process applications

MODEL CHART

Model	Output	Operating Range, psi	Operating Range, bar
636-0	4-20 mA	0 to 15	0 to 1
636-1	4-20 mA	0 to 30	0 to 2
636-2	4-20 mA	0 to 100	0 to 7
636-3	4-20 mA	0 to 300	0 to 20

OPTIONS

Use order code:	Description
NISTCAL-PT1	NIST traceable calibration certificate

SPECIFICATIONS

Service: Liquid, gas or vapor.
Wetted Materials: 316L SS.
Fill Fluid: DC 200 silicone (standard).
Accuracy: ±0.30% of calibrated span including linearity hysteresis and repeatability (BFSL) at 25°C (77°F) and 12 VDC excitation.
Stability: ±0.5% of upper range limit for six months.
Temperature Limits: Electronics (ambient): -40 to 140°F (-40 to 60°C); Process interface: -40 to 212°F (-40 to 100°C).
Pressure Limits: 300% upper range limit.
Compensated Temperature Range: -20 to 180°F (-29 to 82°C).
Thermal Effect: (includes zero and span). Between -20 and 180°F (-29 and 82°C). ±2.0% per 50°F (28°C).
Power Requirements: 12-30 VDC (636), 8-14 VDC (636LP), reverse polarity protection.
Output Signal: 4-20 mA DC, limited to 30 mA DC (636), 1-5 VDC (636LP).
Zero and Span Adjustments: Null: 4.0 mA ±2% span (636),1 VDC ±1% span (636LP); Span: 16.0 mA ±1% span (636), 4 VDC ±1% span (636LP).
Loop Resistance: 900 Ω max @ 30 V.
Electrical Connection: 3/4″ female NPT 24″ (61 cm), 22 AWG.
Process Connection: 1/2″ female NPT.
Enclosure Rating: NEMA 4 (IP56).
Weight: 0.83 lb (374 g).
Compliance: CSA, FM.
FM and CSA approved explosion-proof for Class I, Division 1, Groups B, C, and D, Class II Groups E, F, and G Class III.

Dwyer

SERIES IWP

INDUSTRIAL WEATHERPROOF PRESSURE TRANSMITTER

Exceptional Reliability for Harsh Environments

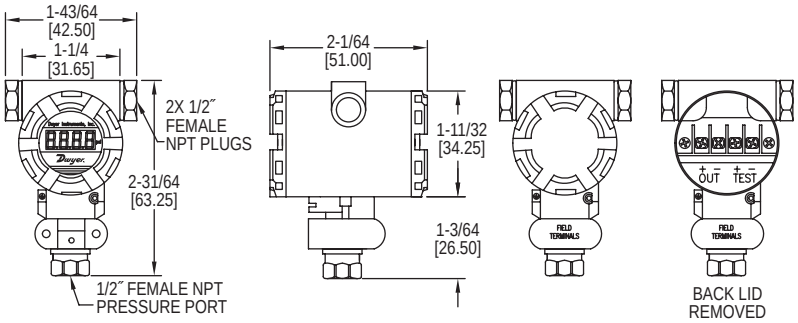

The **Series IWP Industrial Weatherproof Pressure Transmitter** provides an exceptional value solution to pressure measurement in industrial conditions requiring high-performance, stability and long service life. The precise operation under dirty and wet conditions, make the Series IWP an ideal choice for petroleum, chemical and metallurgical industry applications.

BENEFITS/FEATURES

- Rugged, weather-proof design supports use in harsh environments

APPLICATIONS

- Harsh environments
- Process
- Chemical
- Petroleum
- Metallurgical

SPECIFICATIONS

Service: Gases and liquids compatible with wetted materials.
Wetted Materials: 304 and 316 SS.
Accuracy: 0.5% FS.
Stability: <0.2% FS per year.
Temperature Limits: -22 to 203°F (-30 to 95°C).
Compensated Temperature Limits: 32 to 158°F (0 to 70°C).
Pressure Limits: 1.5 x pressure range.
Temperature Coefficient: 0.3% FS per 10°C.
Power Requirements: 12-36 VDC.
Output Signal: 4-20 mA.
Loop Resistance: 1200 Ω max.
Electrical Conduit Connection: 1/2″ female NPT.
Process Connection: 1/2″ female NPT.
Enclosure Rating: IP65.

MODEL CHART

Model	Pressure Range
IWP-00	0 to 30 psig
IWP-01	0 to 50 psig
IWP-02	0 to 100 psig
IWP-03	0 to 200 psig
IWP-04	0 to 300 psig
IWP-05	0 to 500 psig
IWP-10	0 to 30 psia

OPTIONS

Use order code:	Description
NISTCAL-PT1	NIST traceable calibration certificate

Dwyer

SERIES 3200G

EXPLOSION-PROOF PRESSURE TRANSMITTER

HART®, Push-Button Configuration, Rangeability (100:1)

CALIBRATION SERVICES AVAILABLE

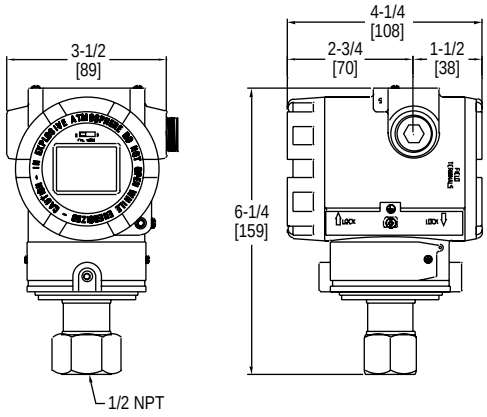

The Mercoid® **Series 3200G Explosion-Proof Smart Pressure Transmitter** is a microprocessor-based high performance transmitter, which has flexible pressure calibration, push-button configuration, and programmable using HART® Communication. The Series 3200G is capable of being configured with the zero and span buttons, a field calibrator is not required for configuration. The transmitter software compensates for thermal effects, improving performance. EEPROM stores configuration settings and stores sensor correction coefficients in the event of shutdowns or power loss. The Series 3200G is FM approved for use in hazardous (Classified) locations. The 100:1 rangeability allows the smart transmitter to be configured to fit any application.

BENEFITS/FEATURES
- Completely configurable using zero/span buttons (no calibrator required)
- Rangeability (100:1)
- High accuracy (±0.075%)
- Automatic sensor temperature compensation
- Fail-mode process function

APPLICATIONS
- Water and wastewater
- Chemical and petrochemical
- Pulp and paper
- Oil and gas
- Food and beverage

SPECIFICATIONS

Service: Compatible gases, steam, liquids or vapors.
Wetted Materials: 316L SS.
Accuracy: ±0.075% FS (@ 20°C).
Rangeability: 100:1 turn down.
Stability: ±0.125% FSO/yr.
Temperature Limits: Process: -40 to 248°F (-40 to 120°C); Ambient: Without LCD -40 to 185°F (-40 to 85°C); With LCD -22 to 176°F (-30 to 80°C).
Thermal Effect: ±0.125% span/32°C.
Power Requirements: 11.9-45 VDC.
Output Signal: 4-20 mA / HART® Communication.
Response Time: 0.12 s.
Damping Time: 0.25 to 60 s.
Loop Resistance: Operation: 0 to 1500 Ω; HART® Communication: 250 to 500 Ω.
Electrical Connection: Two 1/2″ female NPT conduit, screw terminal.
Process Connections: 1/2″ female NPT.
Display: Optional 5 digit LCD.
Enclosure Rating: NEMA 4X (IP66) and explosion proof for Class I, Div I Groups A, B, C and D.
Weight: 5.5 lb (2.5 kg).
Compliance: CE, FM.

MODEL CHART

Model	Range psi (kPa)	Span Limits* Minimum psi (kPa)	Span Limits* Maximum psi (kPa)	Maximum Pressure psi (bar)	LCD Display
3200G-1-FM-1-1	-14.5 to 21 (-100 to 150) (Factory set 0 to 21 psig)	0.22 (1.5)	21 (150)	58 (4)	No
3200G-2-FM-1-1	-14.5 to 217 (-100 to 1500) (Factory set 0 to 217 psig)	2 (15)	217 (1500)	580 (40)	No
3200G-3-FM-1-1	0 to 725 (0 to 5000)	7.25 (50)	725 (5000)	2000 (138)	No
3200G-4-FM-1-1	0 to 3600 (0 to 25000)	36 (250)	3600 (25000)	10000 (690)	No
3200G-5-FM-1-1	0 to 8500 (0 to 60000)	87 (600)	8700 (60000)	11600 (800)	No
3200G-1-FM-1-1-LCD	-14.5 to 21 (-100 to 150) (Factory set 0 to 21 psig)	0.22 (1.5)	21 (150)	58 (4)	Yes
3200G-2-FM-1-1-LCD	-14.5 to 217 (-100 to 1500) (Factory set 0 to 217 psig)	2 (15)	217 (1500)	580 (40)	Yes
3200G-3-FM-1-1-LCD	0 to 725 (0 to 5000)	7.25 (50)	725 (5000)	2000 (138)	Yes
3200G-4-FM-1-1-LCD	0 to 3600 (0 to 25000)	36 (250)	3600 (25000)	10000 (690)	Yes
3200G-5-FM-1-1-LCD	0 to 8500 (0 to 60000)	87 (600)	8700 (60000)	11600 (800)	Yes

*Span = Upper range limit - Lower range limit.

Note: Contact factory for custom calibration.

ACCESSORIES

Model	Description
A-630	Stainless steel angle type bracket with SS bolts
A-631	Stainless steel flat type bracket with SS bolts
BBV-0N	2-valve block manifold
DevCom2000	HART® communication protocol software

Dwyer

SERIES 3200G

EXPLOSION-PROOF PRESSURE TRANSMITTER

HART®, Push-Button Configuration, Rangeability (100:1)

CALIBRATION SERVICES AVAILABLE

MODEL CHART														
Example	**3200G**	**-2**	**-FM**	**-3**	**-1**	**-LES**	**S2**	**A1**	**05**	**S**	**2**	**-05**	**-LCD**	**3200G-2-FM-3-1-LESS2A105S2-05-LCD**
Series	3200G													Explosion-proof pressure transmitter
Range		1 2 3 4 5												-14.5 to 21 psig (factory set 0 to 21 psig) -14.5 to 217 psig (factory set 0 to 217 psig) 0 to 725 psig 0 to 3600 psig 0 to 8500 psig
Approval			FM WP											FM approved Weatherproof only (only available with 316 SS housing)
Process Connection				1 3										1/2″ female NPT Diaphragm seal
Electrical Connection					1									1/2″ female NPT
Diaphragm Seal Type						LED LES LFD LFS								1 extended diaphragm seal direct mount 1 extended diaphragm seal capillary type high 1 flush diaphragm seal direct mount 1 flush diaphragm seal capillary type
Mounting Flange							S2 S3							2″ (50 mm) 316 L SS 3″ (80 mm) 316 L SS
Mounting Flange Rating								A1 A2 D1 D2 J1 J2						ANSI class 150# ANSI class 300# DIN PN 10/16 DIN PN 25/40 JIS 10 K JIS 20 K
Extension Length									00 05 10 15					No extension (standard for flush mount) 2″ extension 4″ extension 6″ extension
Diaphragm Material										S P H T				316L SS diaphragm PTFE and 316L SS diaphragm Hastelloy C-276 diaphragm Tantallum diaphragm
Fill Fluid											2			Silicon oil (-40 to 400°F)
Capillary Length												XX		0 to 20 feet
Options													CC LCD NIST SSH	Custom calibration 5 digit LCD NIST calibration 316 SS housing (only available with WP approval)

CUSTOM CALIBRATION VALUES	
Primary Units	in w.c., ft w.c., mm w.c., in Hg, psig, g/cm², kg/cm², Pa, kPa, bar, mbar, Torr, Atm, mm Hg
Upper Range Limit	20 mA value
Lower Range Limit	4 mA value
Damping Time	0 to 60 seconds
Display Mode	Primary unit, %, mA, rotate

HART® is a registered trademark of Fieldcomm Group, Inc.

MODEL DEVCOM2000

HART® COMMUNICATION PROTOCOL SOFTWARE

Includes USB HART Modem

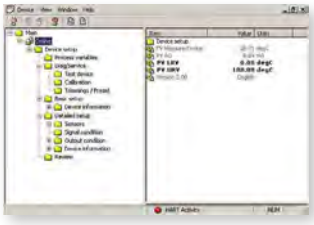

DevCom2000 software

Windows®-based PC

HART field device

USB HART modem

The **Model DEVCOM2000 HART® Communication Protocol Software** turns your PC into a full-featured HART® communicator. Now it is possible to configure transmitters and control valves at the desktop or in the field. DevCom2000 uses device descriptions (DDs) to retrieve data that is stored in the memory of smart field devices. This software is a simple, reliable and secure method to add new measurement values to control systems without the need of additional wires. This software eliminates the need to purchase and maintain a separate handheld HART® communicator.

BENEFITS/FEATURES
- Complete DD library
- Includes USB HART modem
- USB 1.1 and 2.0 compatible
- Self powered modem

APPLICATIONS
- For use with pressure transmitters and control-valves in:
  - Water and wastewater
  - Chemical and petrochemical
  - Oil and gas
  - Pulp and paper
  - Food and beverage

MODEL CHART	
Model	**Description**
DEVCOM2000	Hart® software and modem

SPECIFICATIONS	
HART® Communicator Software **DD Library:** Included. **Generic DD:** Included. **Operating System:** Windows NT®, Windows® 2000, Windows XP®, Windows® Vista (32/64), Windows® 7 (32/64). **USB HART MODEM** **Material:** High strength ABS plastic. **Temperature Limits:** 0 to 50°C (32 to 122°F). **Storage Temperature:** -40 to 85°C (-40 to 185°F). **Humidity:** 0 to 99% (non-condensing). **HART® Cable Length:** 4´ (1.2 m).	**HART® Cable Connectors:** Mini-grabber. **USB Cable Length:** 18″ (0.5 m). **USB Cable Connector:** USB Type A. **USB:** USB 1.1, USB 2.0. **Power:** USB port provides power to unit. **Current Draw:** 20 mA. **Output:** 600 mVpp. **Leakage:** < 10 uA. **Isolation Voltage:** 1500 VDC. **HART®:** HART® 4, HART® 5, HART® 6, HART® 7, HART® Physical Layer Spec HCF_SPEC-54. **Weight:** 3 oz (85 g). **Compliance:** CE.

HART® is a registered trademark of Fieldcomm Group, Inc.
Windows®, Windows NT®, and Windows Vista® are registered trademarks of Microsoft Corporation.

Dwyer
SERIES 3400

SMART PRESSURE TRANSMITTER

HART® Communication, Push-Button Configuration, Rangeability (Up to 100:1)

CALIBRATION SERVICES AVAILABLE

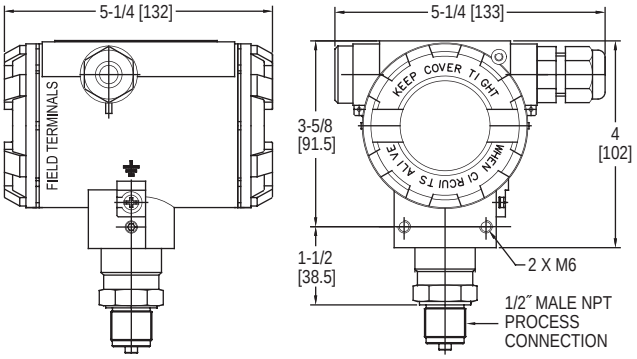

The **Series 3400 Smart Pressure Transmitter** is a microprocessor-based high performance transmitter, which has flexible pressure calibration, push-button configuration, and is programmable using HART® Communication. The Series 3400 is capable of being configured with the zero and span buttons (a field calibrator is not required for configuration). The transmitter software compensates for thermal effects, improving performance. EEPROM stores configuration settings and stores sensor correction coefficients in the event of shutdowns or power loss. The Series 3400 can be configured to be ATEX or IECEX approved for use in hazardous (classified) locations. The rangeability allows the smart transmitter to be configured to fit most applications.

BENEFITS/FEATURES

- High accuracy (±0.075% FS)
- Rangeability (up to 100:1)
- Configurable using zero/span buttons (no calibrator required)
- Fail-mode process function
- Automatic ambient temperature compensation

APPLICATIONS

- Water and wastewater
- Chemical and petrochemical
- Pulp and paper
- Oil and gas
- Food and beverage

MODEL CHART

Model	Range	Min. Set Range	Overpressure limit
3400-AL-10-NM-2	0 to 15 psi	1.45 psi	30 psi
3400-AL-13-NM-2	0 to 100 psi	1.45 psi	200 psi
3400-AL-15-NM-2	0 to 350 psi	3.6 psi	725 psi
3400-AL-20-NM-2	0 to 2300 psi	14.5 psi	6525 psi
3400-AL-23-NM-2	0 to 4350 psi	43.5 psi	6525 psi

Note: Bar ranges are also available.

SPECIFICATIONS

Service: Compatible gases, steam, liquids or vapors.
Wetted Materials: 316L SS.
Accuracy: ±0.075% FS (@ 20°C).
Rangeability: Up to 100:1 turn down.
Stability: ≤0.075% FSO/3 years.
Temperature Limits: Ambient: -40 to 185°F (-40 to 85°C); Process with -DS: -40 to 400°F (-40 to 204°C).
Thermal Effect: < ±0.05% span/10°C.
Power Requirements: 10-55 VDC.
Output Signal: 4-20 mA.
Response Time: 16 to 480 ms (programmable).
Damping Time: 0 to 60 s.
MTBF (Mean Time Between Failure): 126 years.
MTTF (Mean Time To Failure): MTBF minus 8 h.
Electrical Connection: Packing gland M20x1.5, two 1/2″ female NPT conduit, screw terminal.
Process Connections: 1/2″ female or male NPT.
Enclosure Rating: NEMA 4X IP66/IP67.
Agency Approvals: CE; -IS, -FP suffix: ATEX Compliant CE 0518 II 2G Ex ia/db IIC T6/T5 Gb Ta<80°C, T5 / II 2D Ex ia/tb IIIC T85°C/T100°C Db. Type Certificate No. KDB 17ATEX0056X. ATEX Standards: EN 60079-0:2012+A11:2013, EN 60079-1:2014, EN 60079-11:2012, EN 60079-26:2015, EN 60079-31:2014 IECEx Compliant: Ex ia/db IIC T6/T5 Gb / Ex ia/tb IIIC T85°C/T100° Db. Certificate of Conformity IECEx KDB 17.0008X. IECEx Standards: IEC 60079-0:2011, IEC 60079-1:2014-06, IEC 60079-11:2011, IEC 60079-26:2006, IEC 60079-31:2013.

SMART PRESSURE TRANSMITTER

HART® Communication, Push-Button Configuration, Rangeability (Up to 100:1)

CALIBRATION SERVICES AVAILABLE

MODEL CHART											
Example	**3400**	**-AL**	**-01**	**-DS**	**-1**	**-SPD**	**A**	**0**	**-1**	**-NIST**	**3400-AL-01-DS-1-SPDA0-1-NIST**
Series	3400										Single pressure smart transmitter
Housing		AL									Aluminum housing
		AS									Stainless steel housing
Range			01								0 to 18 psia
			03								0 to 100 psia
			05								0 to 350 psia
			07								0 to 1000 psia
			10								0 to 15 psi
			11								0 to 30 psi
			13								0 to 100 psi
			15								0 to 350 psi
			17								0 to 1000 psi
			20								0 to 2300 psi
			23								0 to 4350 psi
			26								0 to 8700 psi
			29								0 to 14500 psi
Process Connections				NM							1/2″ male NPT
				NF							1/2″ female NPT
				DS							Diaphragm seal selection
Electrical Connections					1						Packing gland M20x1.5
					2						Thread 1/2″ female NPT
Diaphragm Seal Type						SPD					S-P flush diaphragm seal direct mount
						SPR					S-PK flush diaphragm seal capillary mount
						STD					S-T extended diaphragm seal direct mount
						STR					S-TK extended diaphragm seal capillary mount
Mounting Flange							A				2″ ANSI
							B				2″ DN50
							C				3″ ANSI
							D				3″ DN80
Extension Length								0			No extension, flush mount
								2			2″ (50 mm)
								4			4″ (100 mm)
								6			6″ (150 mm)
Capillary Length									#		Capillary length, 1 to 20 ft (increments of 1)
Options										FP	ATEX/IECEx flameproof
										GM	2″ galvanized steel mounting bracket
										IS	ATEX/IECEx intrinsically safe
										MT	Stainless steel tag plate mounted on wire
										NIST	NIST traceable calibration certificate
										SM	2″ SS mounting bracket
										ST	SS plate riveted to the housing

ACCESSORIES	
Model	**Description**
A-630	Stainless steel angle type bracket with SS bolts
A-631	Stainless steel flat type bracket with SS bolts
BBV-0N	2-valve block manifold
DevCom2000	HART® communication protocol software

HART® is a registered trademark of Hart Communication Foundation

Dwyer

SERIES IS626

INTRINSICALLY SAFE PRESSURE TRANSMITTERS

For Use In Hazardous Locations

CALIBRATION SERVICES AVAILABLE

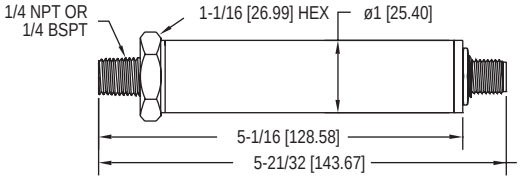

Male NPT/BSPT connector with male M-12 connector

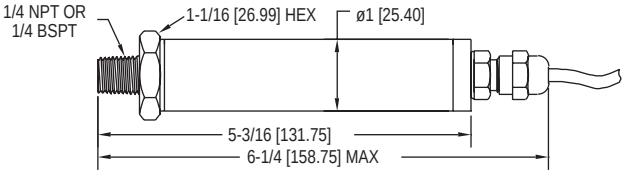

Male NPT/BSPT connector with cable gland

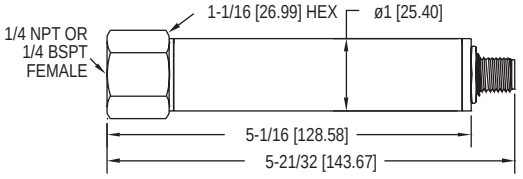

Female NPT/BSPT connector with male M-12 connector

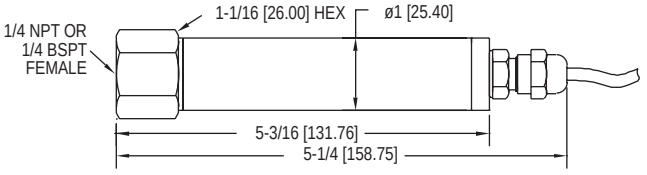

Female NPT/BSPT connector with cable gland

VIDEO ONLINE

The Dwyer **Series IS626 Intrinsically Safe Pressure Transmitters** can be used to accurately measure compatible gases and liquids compatible with its 316/316L SS wetted parts. Series IS626 full-scale accuracy is 0.25%. Designed for industrial environments with a NEMA 4X (IP66) housing, this transmitter resists most effects of shock and vibration. Models are available with a 3´ cable or M-12 4 pin connection. The IS626 is UL listed for use in Hazardous (Classified) Locations. The protection method is by Intrinsic Safety, "ia". It was investigated by UL under UL Standard 913 Sixth Edition and CSA Standard No. 157-92.

BENEFITS/FEATURES

- Exceptional accuracy for ensuring tight-control and minimizing costly out of specification conditions
- NEMA 4x rated enclosure provides protection in harsh environments permitting outdoor monitoring or in areas where dust and particulate matter exists
- Robust sensor provides shock and vibration resistance insuring stability in controlling pressure for process applications

APPLICATIONS

- Monitoring pressure in hazardous environments
- Process

SPECIFICATIONS

Service: Compatible gases and liquids.
Wetted Materials: Type 316, 316L SS.
Accuracy: 0.25% FS.
Temperature Limit: 0 to 176°F (-18 to 80°C).
Compensated Temperature Range: 0 to 176°F (-18 to 80°C).
Thermal Effect: ±0.02% FS/°F (includes zero and span).
Pressure Limits: See Pressure Range Table.
Power Requirements: 10-28 VDC.
Output Signal: 4-20 mA.
Response Time: 50 ms.
Loop Resistance: 0-900 Ω max.
Current Consumption: 38 mA (max).
Electrical Connections: 3 ft cable or 4-pin M-12 connector.
Process Connection: 1/4″ male or female NPT and BSPT.
Enclosure Rating: NEMA 4X (IP66).
Mounting Orientation: Mount in any position.
Weight: 8.9 oz (252 g).
Agency Approvals: CE, cULus Intrinsically Safe to UL Standard 913.

For use in Hazardous (Classified) Locations:
Class I Div. 1 Groups A,B,C,D
Class II Div. 1 Groups E,F,G
Class III Div. 1
Temperature Code: T4 @ 80°C ambient.
Install in accordance with control drawing 01-700797-00.
WARNING To prevent ignition of flammable or combustible atmospheres, disconnect power before servicing.
Use with approved safety barriers using entity evaluation.

MODEL CHART

Model	Range	Maximum Pressure (psig)	Over Pressure (psig)
IS626-07-GH-P1-E1-S1	15 psig	30	150
IS626-08-GH-P1-E1-S1	30 psig	60	300
IS626-09-GH-P1-E1-S1	50 psig	100	300
IS626-10-GH-P1-E1-S1	100 psig	200	500
IS626-11-GH-P1-E1-S1	150 psig	300	750
IS626-12-GH-P1-E1-S1	200 psig	400	1000
IS626-13-GH-P1-E1-S1	300 psig	600	1500
IS626-14-GH-P1-E1-S1	500 psig	1000	2500

Note: For optional M-12 4 pin electrical connection, change E1 to E6.

OPTIONS

To order add suffix:	Description
-NIST	NIST traceable calibration certificate

Example: IS626-07-GH-P1-E1-S1-NIST

ACCESSORIES

Model	Description
A-295	Female four pin M-12 to cable gland connector
A-231	16´ (5 m) shielded cable with 4 pin female M-12 connection
MTL5541	Galvanic barrier
MTL7706	Intrinsically safe zener barrier

SELECTION GUIDE
pages 110-111

TYPICAL APPLICATIONS
pages 112-113

Thermometers, Dial
page 114

Thermometers, Glass
page 115

Thermometers with Transmitter/Switch
page 116

Temperature/Process Controllers
pages 117-121

Panel Meters/ Indicators
page 122

Temperature Switches, Limit
pages 122-123

DIN Rail Temperature Controllers
page 124

Temperature Switches, Digital
pages 125-129

Temperature Switches, Mechanical
pages 129-130

Temperature Transmitters
pages 131-133

Temperature Sensors
pages 134-148

FEATURED PRODUCTS

DUCT AND IMMERSION BUILDING AUTOMATION TEMPERATURE SENSORS

SERIES TE | page 135

- 8 foot plenum rated cable
- Terminal blocks for electrical connection

AVERAGING TEMPERATURE SENSOR

SERIES TE-A | page 138

- Integral mounting slots
- Captured 1/4 turn housing lid

OUTDOOR TEMPERATURE SENSORS

SERIES TE-OND/TE-RND/TE-OSA | page 137

- Weatherproof for outdoor installation
- Radiation shield to eliminate direct sunlight effects

SURFACE MOUNT TEMPERATURE SENSOR

SERIES S2 | page 139

- Low profile sensor
- Perfect for where immersion wells are not feasible

Dwyer

DIAL
Thermometers

SERIES	BT - page 114	BTLRN - page 114	IT - page 115	BTO - page 116	RRT3 - page 116
Range	0 to 1000°F	0 to 200°F	-40 to 550°F	0 to 550°F	-40 to 300°F
Dial Size	2″, 3″ or 5″	3″	9″ liquid filled linear scale	3″ or 5″ with 4-20 mA temperature output	3-1/2″ with set point and SPDT output
Stem Length	2.5″, 4″ or 6″	12″ to 72″	2-1/2″ or 5″ thermowell	2-1/2″, 4″, 6″, 9″, or 12″	3-1/8″ remote stem with 10.5´ capillary
Process Connection	1/2″ NPT; Back, lower, or adjustable mount	1/2″ NPT; Back mount	3/4″ NPT; Adjustable lower mount	1/2″ NPT; Adjustable mount	1/2″ NPT; Remote mount

LIMIT CONTROL
Digital Temperature Switches

SERIES	16L - page 122	TSF - page 123	TSF-DF - page 123
Number of Temperature Units	1	1	1
Temperature Input Type	Thermocouple, RTD, voltage, or current	Type J, K, or S thermocouple	Type J, K, or S thermocouple
Digital Input	No	Yes	Yes
Number of Relay Outputs	1 or 2	1	1
Relay Type	2 SPST, 1 SPDT	SPDT	SPST
Approvals	FM, UL	CE, FM, UL	CE, UL

HVAC/BAS
Temperature Transmitters

SERIES	BTT* - page 131	TTW - page 132	TTE - page 133
Output Type	Current, voltage	Current	Current
Housing Type	Interior (wall, duct, immersion), exterior - IP66	Exterior - IP66	Exterior (weather and explosion proof)
Sensor Type/Input	Pt1000 RTD	Pt100 RTD	Pt1000
Approvals	CE	CE	CE, FM, ATEX/IECEx

***CALIBRATION SERVICES AVAILABLE**

These Selection Guides are for quick comparison of similar products. Please refer to the catalog page number referenced for complete product information and specifications.

PID LOOP CONTROLLERS
Temperature and Process Controllers

SERIES	16C, 8C, 4C - page 117	32B, 16B, 8B, 4B - pages 118-119	16G, 8G, 4G - pages 120-121	SCD - page 124
Number of Temperature Inputs	1	1	1	1 to 8
Temperature Input Type	Thermocouple or RTD	Thermocouple, RTD, current, or voltage	Thermocouple, RTD, current, or voltage	Thermocouple, RTD, current, or voltage
DIN Sizes	1/16, 1/8, 1/4	1/32, 1/16, 1/8, 1/4	1/16, 1/8, 1/4	DIN rail mount
Number of Outputs	1	2	2	2 to 16
Output Type	SPDT mechanical relay 14 VDC pulse voltage 4-20 mA current	SPDT mechanical relay 14 VDC pulse voltage 4-20 mA current 0-10 VDC voltage	SPDT mechanical relay 14 VDC pulse voltage 4-20 mA current 0-10 VDC voltage	SPDT mechanical relay 14 VDC pulse voltage 4-20 mA current 0-10 VDC voltage
Approvals	CE, UL	CE, UL	CE, UL	CE, UL

HEATING AND COOLING/REFRIGERATION CONTROL
Digital Temperature Switches

SERIES	TCS - page 125	TST & TS2 - pages 126 & 127	TSXT - page 126	TSS2 - page 127	TSW - page 128
Number of Temperature Units	1	1	3	2	1 or 2
Temperature Input Type	Type J, K, or S thermocouple	TST: PTC or NTC thermistor; TS2: PTC	PTC or NTC thermistor	PTC or NTC thermistor	PTC or NTC thermistor
Digital Input	No	No	Yes	No	No
Number of Relay Outputs	1	2	1, 2, or 3	2	1 or 2
Relay Type	SPDT	SPDT	1 output models: SPDT 2 and 3 output models: SPST	SPDT	SPDT
Approvals	CE, UL	CE, cURus	CE, cURus	CE, cURus	CE, cURus

These Selection Guides are for quick comparison of similar products. Please refer to the catalog page number referenced for complete product information and specifications.

Environmental chamber control simplified with digital zone control

Environmental chambers have traditionally used separate controls to handle the temperature and relative humidity control tasks. The Love® controls 32DZ dual zone control controls both parameters in a single small format (1/32 DIN) control to handle both zones, simplifying wiring and reducing panel costs.
The 32DZ can switch small resistive loads directly or, when used with Dwyer® Series 62 solid state relays (not shown), can switch larger loads.

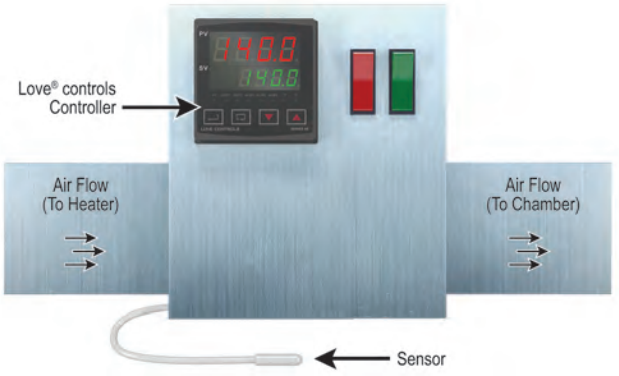

Dwyer® controllers used within heater controllers

In bioscience laboratories, the preferred methods of temperature control for experiments are heated water baths. There are experiments where water cannot be used, so the next feasible option is to send temperature controlled air to the experiment site. In order to use temperature controlled air, an air heater is needed. Within this product, a Love® controls temperature controller is used for accurate and responsive temperature control. The Love® controls controller can adapt to a different environment through different operating modes such as SELF-TUNE or manual PID adjustments, or preset PID responses.

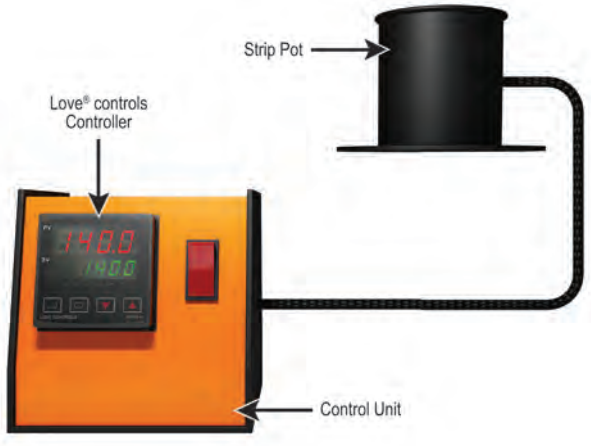

Love® controls controllers involved in insulation removal

For most wires, removing the insulation is easy, but for magnetic and enamel wires, removing the insulation is very difficult. One way to easily remove the insulation of the magnetic or enamel wire is to dip them in a solution of molten fused salts. The salts are heated to a temperature high enough to melt the salts into a liquid, but not deteriorate them. This process uses a Love® controls feedback temperature controller. The Love® controls controller allows the operator to input a desired temperature and maintain that temperature accurately. The Love® controls controller will also retain the input temperature after the power is disconnected.

Series TSX3 Digital Temperature Switches regulate temperature in refrigerated and display cases

When storing food or other perishables in chillers or display cases, temperature must be carefully regulated to ensure the products remain fresh. If the storage area rises above the critical preservation temperature, products can have their shelf life dramatically shortened or be spoiled altogether. A Dwyer® Series TSX3 digital temperature switch will prevent these scenarios by monitoring temperature and activating refrigeration and defrost cycles to ensure the storage temperature stays within safe limits.

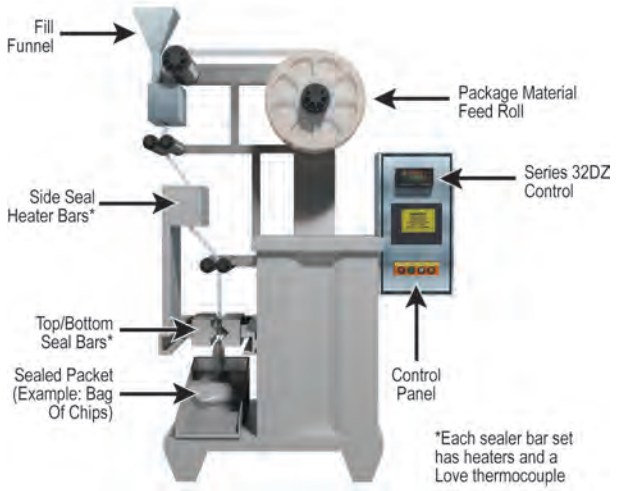

Form, fill and seal machine control simplified with dual zone control

Form, fill and seal machines traditionally have used separate controls to handle the temperature control requirement for the side and top/bottom seal bars. The Love® controls 32DZ allows for a single small format (1/32 DIN) control to handle both zones, simplifying wiring and reducing panel costs.
The 32DZ can switch small resistive loads directly or, when used with the Love® 62 Series solid state relays (not shown), can switch larger loads.

Love® controls controllers used in the packaging of condiments

Packaging of condiments require the sealing bars to be heated to a temperature hot enough to seal the packages, but not destroy the packaging material. The heat on the sealing bars needs to be controlled to ensure the heat does not become excessive. Love® controls controllers are used in this process to accurately control the heat on the sealing bars. The sensors from the Love® controls controllers are placed on the sealing bars to ensure accurate temperature readings. Should the heat become excessive, an alarm light on the controller notifies the operator of the impending conditions.

Resin transfer molding

Accurate control of temperature and epoxy resin flow is important during resin transfer molding. For the epoxy resin to have an even and thorough flow, the resin must be at a temperature high enough to allow it to flow, yet not burn the resin. With the help of a Love® controls controller, the temperature of the resin is accurately controlled under different conditions through the different PID operating modes. Another Love® controls controller, with a flow transducer, is used in this process to control the flow of the epoxy resin. The Love® controls controller provides information on the temperature and flow rate to the computer through an RS-485 serial communication option.

Controlling water temperature in outdoor wood furnace

The Series TSWB is the ideal control for monitoring water temperature and water level in outdoor wood furnaces. The Series TSWB controls the damper and/or the fan that provides oxygen to the flame in the fire box. Usually an external light will also be controlled by the Series TSWB to inform the user that the furnace is out of wood or that the water level is low. The TSWB accepts thermistor inputs for temperature and conductivity probe, Dwyer CLP-1, inputs for monitoring water level.

Dwyer

SERIES BT

BIMETAL THERMOMETER

2″, 3″ or 5″ Dial, Dual Scale, ±1% Full-Scale Accuracy, External Reset

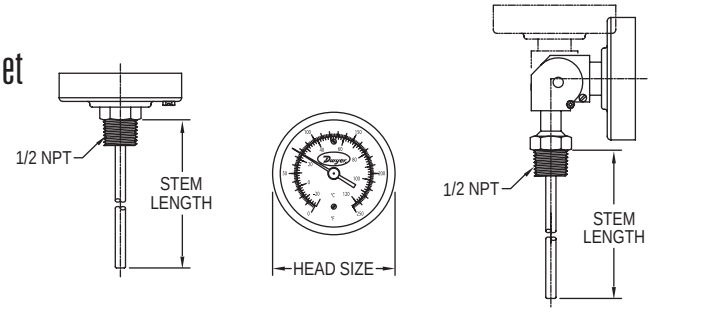

Back connection

Adjustable angle connection

The **Series BT Bimetal Thermometer** offers accurate, reliable service even in the toughest environments. These corrosion resistant units are constructed from stainless steel and are hermetically sealed to prevent crystal fogging.

BENEFITS/FEATURES
- Hermetically sealed
- Adjustable dial position models

APPLICATIONS
- Chiller or boiler water temperature monitoring
- Treatment plant temperature monitoring

SPECIFICATIONS

Wetted Materials: 304 SS.
Housing Material: Series 300 SS.
Lens: Glass.
Accuracy: ±1% FS.
Response Time: ≤ 40 s.
Temperature Limits: Head: 200°F (93°C); Stem: Not to exceed 50% over-range or 1000°F (538°C) or 800°F (427°C) continuously.
Process Connection: 1/4″ NPT on 2″ dial size; 1/2″ NPT on 3″ or 5″ dial size.
Stem Diameter: 1/4″ OD.
Immersion Depth: Minimum 2″ in liquids, 4″ in gas.

MODEL CHART

Model	Dial Size	Stem Length	Connection	Range °F (°C)	Degree Div °F (°C)	Model	Dial Size	Stem Length	Connection	Range °F (°C)	Degree Div °F (°C)
BTB22551*	2″	2-1/2″	Back	0 to 250	2	**BTB3605D**	3″	6″	Back	0 to 250 (-20 to 120)	2 (2)
BTB2405D	2″	4″	Back	0 to 250 (-20 to 120)	2 (2)	**BTA54010D**	5″	4″	Adjustable	0 to 200 (-20 to 100)	2 (2)
BTB2409D	2″	4″	Back	200 to 1000 (100 to 550)	10 (5)	**BTA5405D**	5″	4″	Adjustable	0 to 250 (-20 to 120)	2 (2)
BTB32510D	3″	2-1/2″	Back	0 to 200 (-20 to 100)	2 (2)	**BTA5407D**	5″	4″	Adjustable	50 to 550 (10 to 290)	5 (5)
BTB3255D	3″	2-1/2″	Back	0 to 250 (-20 to 120)	2 (2)	**BTA56010D**	5″	6″	Adjustable	0 to 200 (-20 to 100)	2 (2)
BTB3257D	3″	2-1/2″	Back	50 to 550 (10 to 290)	5 (5)	**BTA5605D**	5″	6″	Adjustable	0 to 250 (-20 to 120)	2 (2)
BTB34010D	3″	4″	Back	0 to 200 (-20 to100)	2 (2)	**BTA5607D**	5″	6″	Adjustable	50 to 550 (10 to 290)	5 (5)
BTB3405D	3″	4″	Back	0 to 250 (-20 to 120)	2 (2)	**BTC3255D**	3″	2-1/2″	Lower	0 to 250 (-20 to 120)	2 (2)
BTB3407D	3″	4″	Back	50 to 550 (10 to 290)	5 (5)						

*Model offered in Fahrenheit scale only.

SERIES BTLRN

LONG REACH BIMETAL THERMOMETER

Extra-long Stems Reach Remote Areas, Gripping Handle Available

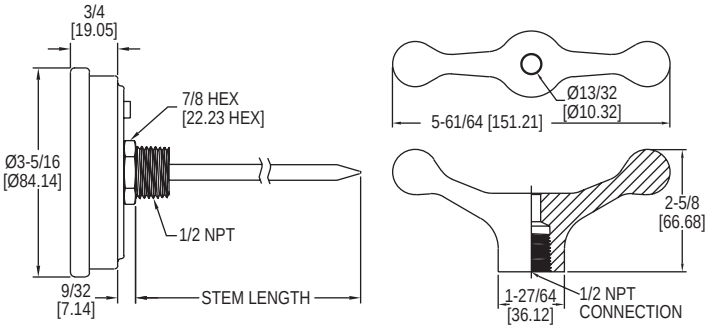

The **Series BTLRN Long Reach Bimetal Thermometer** reaches areas that other thermometers can't. A gripping handle is available as an accessory to comfortably hold the thermometer during temporary installations.

BENEFITS/FEATURES
- Stem lengths from 12″ to 72″

APPLICATIONS
- Large container monitoring
- Duct temperature measurement

SPECIFICATIONS

Wetted Materials: 304 SS.
Housing Materials: Series 300 SS.
Lens: Glass.
Accuracy: ±1%.
Temperature Limits: Ambient: -40 to 392°F (-40 to 200°C).
Dial Size: 3″.
Process Connection: 1/2″ NPT.
Resolution: 2°F (1°C).
Weight: 1.0 lb (0.45 kg).

MODEL CHART

Model	Stem Length	Range*
BTLRN312101	12″	0 to 200°F
BTLRN318101	18″	0 to 200°F
BTLRN324101	24″	0 to 200°F
BTLRN336101	36″	0 to 200°F
BTLRN348101	48″	0 to 200°F
BTLRN360101	60″	0 to 200°F
BTLRN372101	72″	0 to 200°F

*Dual scale units available by changing last digit to D. **Example:** BTLRN31210D

ACCESSORIES

Model	Description
BTLR-GH	Gripping handle

Dwyer

SERIES IT

INDUSTRIAL THERMOMETER

9″ Scale, Adjustable Angle Stem

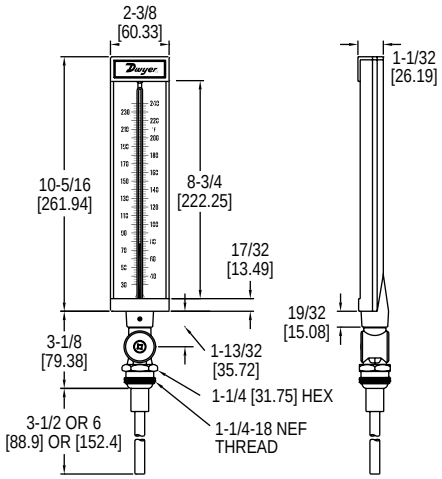

The **Series IT Industrial Thermometer** allows users to easily take accurate temperature measurements in any environment. The case of the IT series is made of die cast aluminum for extra durability in industrial environments.

BENEFITS/FEATURES
- Organic, non-toxic fill fluid
- Dual scale in °F and °C
- Adjustable stem angle

APPLICATIONS
- Boiler or chiller temperature monitoring

SPECIFICATIONS

Wetted Material: Tapered cast aluminum with graphite fill.
Housing Material: 9″ (228 mm) aluminum.
Lens: Glass.
Accuracy: 1%.
Scales: Aluminum painted white with black markings.
Process Connection: 1-1/4-18 NEF thread.
Liquid Filling: Organic blue liquid filled tube.
Mounting: Adjustable stem: Vertical plane 180° horizontal plane 360°.
Weight: 1 lb 7 oz (0.65 kg).

MODEL CHART

3-1/2″ Stem Model	Range	6″ Stem Model	Range
ITA9351D	-40 to 110°F (-40 to 43°C)	**ITA9601D**	-40 to 110°F (-40 to 43°C)
ITA9352D	0 to 120°F (-17 to 49°C)	**ITA9602D**	0 to 120°F (-17 to 49°C)
ITA9353D	0 to 160°F (-17 to 71°C)	**ITA9603D**	0 to 160°F (-17 to 71°C)
ITA9354D	20 to 180°F (-6 to 82°C)	**ITA9604D**	20 to 180°F (-6 to 82°C)
ITA9355D	30 to 240°F (0 to 114°C)	**ITA9605D**	30 to 240°F (0 to 114°C)
ITA9356D	30 to 300°F (-1 to 149°C)	**ITA9606D**	30 to 300°F (-1 to 149°C)
ITA9357D	50 to 400°F (10 to 240°C)		
ITA9358D	50 to 550°F (10 to 288°C)		

SERIES IT-W

INDUSTRIAL THERMOMETER THERMOWELLS

Fits IT Thermometers with 3-1/2″ and 6″ Stem Lengths

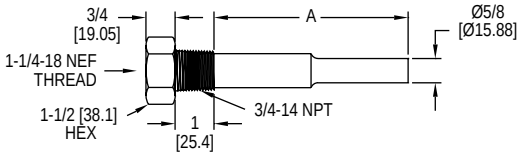

Standard thermowell

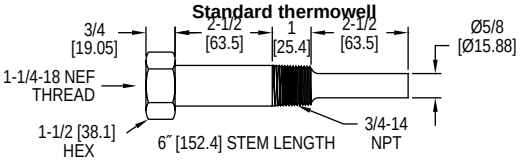

Lag thermowell

The **Series IT-W Industrial Thermometer Thermowells** reduce installation cost and time by eliminating the need to drain the system when servicing industrial thermometers. The thermowells protect industrial thermometers from high pressure, flow and corrosive media.

BENEFITS/FEATURES
- Designed to fit the Series IT industrial thermometers
- Lag stems available

APPLICATIONS
- Boiler or chiller temperature monitoring

MODEL CHART

Model	Material	Insertion Length	Lag
IT-W01	Brass	2-1/2″	N/A
IT-W11	304 SS	2-1/2″	N/A
IT-W21	316 SS	2-1/2″	N/A
IT-W04	Brass	5″	N/A
IT-W14	304 SS	5″	N/A
IT-W24	316 SS	5″	N/A
IT-W07	Brass	2-1/2″	2-1/2″
IT-W17	304 SS	2-1/2″	2-1/2″
IT-W27	316 SS	2-1/2″	2-1/2″

USA: California Proposition 65
⚠**WARNING:** This product can expose you to chemicals including Lead, which is known to the State of California to cause cancer and birth defects or other reproductive harm. For more information go to www.P65Warnings.ca.gov.

Dwyer

SERIES BTO

BIMETAL THERMOMETER WITH TRANSMITTER OUTPUT

Bimetal Stem with 4-20 mA Output, 3″ or 5″ Dial

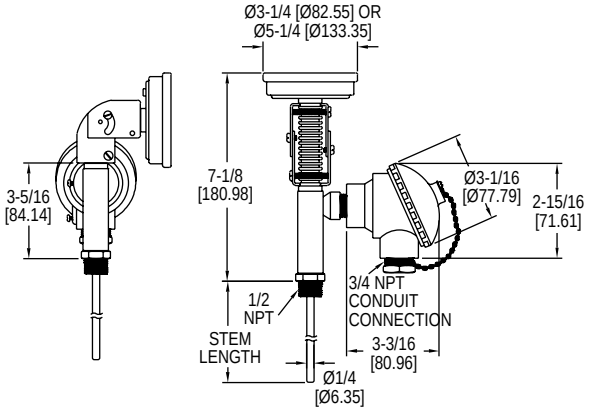

The **Series BTO Bimetal Thermometer with Transmitter Output** eliminates the need for a separate thermometer and transmitter.

BENEFITS/FEATURES
- Thermometer and transmitter in one device
- Weatherproof construction

APPLICATIONS
- Boilers
- Compressors
- Thermal oxidizers

SPECIFICATIONS

THERMOMETER SPECIFICATIONS
Wetted Materials: 304 SS.
Housing Material: 304 SS.
Lens: Glass.
Accuracy: ±1% FS.
Temperature Limits: Ambient: -58 to 185°F (-50 to 85°C).
Dial Size: 3″ or 5″.
Process Connection: 1/2″ NPT.
Resolution: 2°F (5°F for 400°F and 550°F models).
Weight: 1.95 lb.

TRANSMITTER SPECIFICATIONS
Temperature Limits: Ambient: -58 to 185°F (-50 to 85°C).
Power Requirement: 10-33 VDC.
Output Signal: 4-20 mA.
Loop Resistance: 1045 Ω.
Power Consumption: 38 mA.
Enclosure Rating: NEMA 4X (IP66).

MODEL CHART

Model	Dial Size	Stem Length	Range	Model	Dial Size	Stem Length	Range
BTO32551	3″	2.5″	0 to 250°F	**BTO54071**	5″	4″	50 to 550°F
BTO32571	3″	2.5″	50 to 550°F	**BTO56051**	5″	6″	0 to 250°F
BTO34051	3″	4″	0 to 250°F	**BTO56071**	5″	6″	50 to 550°F
BTO36051	3″	6″	0 to 250°F	**BTO59051**	5″	9″	0 to 250°F
BTO36071	3″	6″	50 to 550°F	**BTO59071**	5″	9″	50 to 550°F
BTO31251	3″	12″	0 to 250°F	**BTO51251**	5″	12″	0 to 250°F
BTO31271	3″	12″	50 to 550°F	**BTO51271**	5″	12″	50 to 550°F
BTO52571	5″	2.5″	50 to 550°F				

Note: -40 to 160°F, 0 to 200°F, 50 to 300°F, and 50 to 400°F ranges available, contact factory for more information.

USA: California Proposition 65
⚠**WARNING:** This product can expose you to chemicals including Lead, which is known to the State of California to cause cancer and birth defects or other reproductive harm. For more information go to www.P65Warnings.ca.gov.

SERIES RRT3

REMOTE READING THERMOMETER WITH SWITCH

SPDT Relay, Liquid Actuated Bulb and Capillary

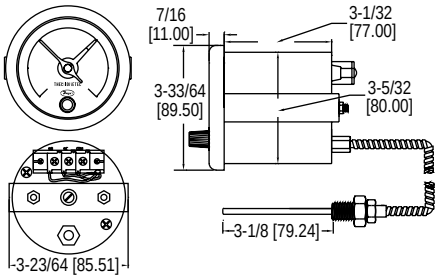

The **Series RRT3 Remote Reading Thermometer with Switch** combines an easy to read 3-1/4″ dual scale dial thermometer and a SPDT relay. Color coordinated pointers display the current process temperature and set point.

BENEFITS/FEATURES
- Fast installation with quick connect terminals
- Long product life cycle with industrial armored capillary

APPLICATIONS
- High temp shut down in process applications
- Boiler or chiller control

MODEL CHART

Model	Temperature Ranges
RRT3120U	-40 to 120°F (-40 to 50°C)
RRT3250U	32 to 248°F (0 to 120°C)
RRT3300U	0 to 300°F (-18 to 149°C)

SPECIFICATIONS
Wetted Materials: 304 SS.
Accuracy: ±3% FS.
Housing Material: 304 SS.
Temperature Limit: -4 to 158°F (-20 to 70°C).
Switch Type: SPDT.
Electrical Ratings: 3 A @ 250 VAC, .2 A @ 250 VDC.
Electrical Connections: Screw terminal.
Process Connection: 1/2″ (12.7 mm) male NPT.
Dial Size: 3-1/2″ (90 mm).
Capillary Length: 10.5′ (3.2 m).
Bulb Length: 3-1/8″ (79.24 mm).
Weight: 2 lb (0.9 kg).

USA: California Proposition 65
⚠**WARNING:** This product can expose you to chemicals including Lead, which is known to the State of California to cause cancer and birth defects or other reproductive harm. For more information go to www.P65Warnings.ca.gov.

TEMPERATURE LOOP CONTROLLERS

Universal Temperature Input, Single Control Output, RS-485 Communication

16C

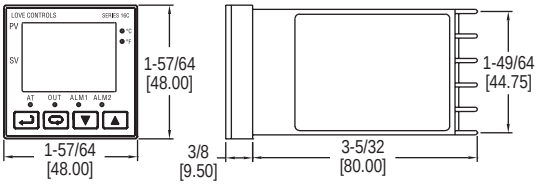

16C

8C

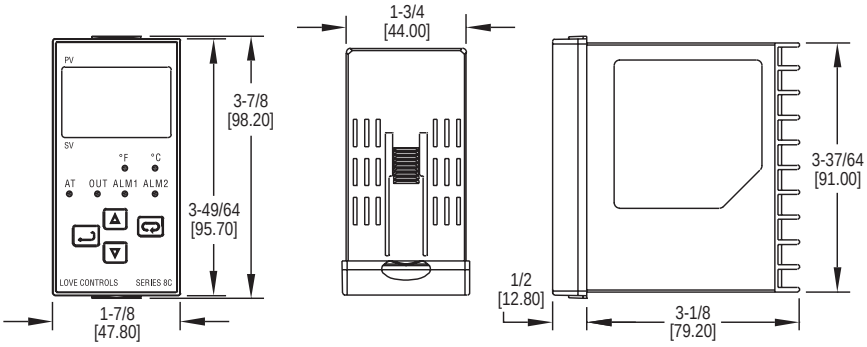

8C

4C

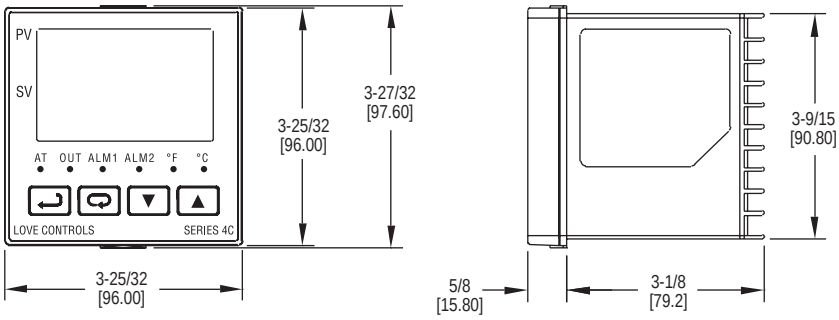

4C

The **Series 16C, 8C, & 4C Temperature Loop Controllers** offer advanced control features for the most demanding temperature or process applications. Offered in 3 standard DIN cutout housing sizes, these controllers are designed with dual, 4 digit LED displays for local indication of the process value, set point, and output conditions.

BENEFITS/FEATURES

- Universal input accepts RTD or thermocouple sensors
- On/off, PID, or manual output control
- RS-485 standard on all models

APPLICATIONS

- Oven, boiler, or chiller control
- Environmental chambers
- Hot plates/melt pots
- Packaging equipment
- Food service equipment

SPECIFICATIONS

Inputs: Thermocouple or RTD.
Display: Two 4 digit, 7 segment LED's. PV: Red, SV: Green.
Accuracy: ±0.25% of span, ±1 least significant digit.
Power Requirements: 100-240 VAC, 50/60 Hz.
Power Consumption: 5 VA max.
Operating Temperature: 32 to 122°F (0 to 50°C).
Memory Backup: Nonvolatile memory.
Control Output Ratings: Relay: SPST, 5 A @ 250 VAC resistive for 16C; SPDT, 5 A @ 250 VAC resistive for 8C and 4C; Voltage pulse: 14 VDC (max. 40 mA); Current: 4-20 mA.
Communication: RS-485 Modbus® ASCII communication protocol.
Weight: 4 oz (114 g) for 16C, 15 oz (425g) for 8C and 4C.
Front Panel Rating: IP56.
Agency Approvals: CE, cULus.

MODEL CHART

Model	Output
16C-2	Voltage pulse
16C-3	Relay
16C-5	Current

MODEL CHART

Model	Output
8C-2	Voltage pulse
8C-3	Relay
8C-5	Current

MODEL CHART

Model	Output
4C-2	Voltage pulse
4C-3	Relay
4C-5	Current

ACCESSORIES

Model	Description
A-600	R/C snubber
MN-1	Mini-Node™ RS-485 to USB converter
SCD-SW	Configuration software

INPUT RANGES

Input Types	Range
K Type TC	-328 to 2372°F (-200 to 1300°C)
K Type TC	-328 to 932°F (-200 to 500°C)
J Type TC	-148 to 2192°F (-100 to 1200°C)
J Type TC	-4 to 752°F (-20 to 400°C)
T Type TC	-328 to 752°F (-200 to 400°C)
T Type TC	4 to 752°F (-20 to 400°C)
E Type TC	32 to 1112°F (0 to 600°C)
N Type TC	-328 to 2372°F (-200 to 1300°C)
R Type TC	32 to 3092°F (0 to 1700°C)
S Type TC	32 to 3092°F (0 to 1700°C)
B Type TC	212 to 3272°F (100 to 1800°C)
L Type TC	-328 to 932°F (-200 to 500°C)
U Type TC	-328 to 1472°F (-200 to 800°C)
Pt 100 RTD	-328 to 1112°F (-200 to 600°C)
Pt 100 RTD	-4 to 932°F (-20 to 500°C)
Pt 100 RTD	32 to 212°F (0 to 100°C)

Modbus® is a registered trademark of Schneider Automation, Inc.

Dwyer

SERIES 32B, 16B, 8B, & 4B

TEMPERATURE/PROCESS LOOP CONTROLLERS

Universal Input, Dual Control Output, RS-485 Communication

32B

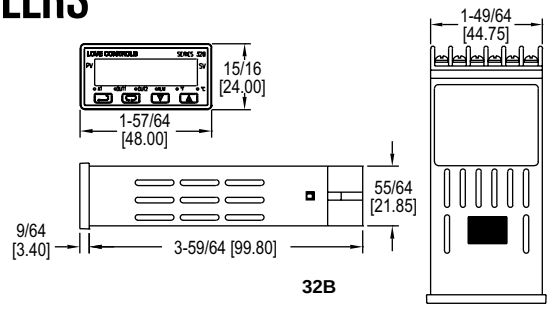

32B

16B

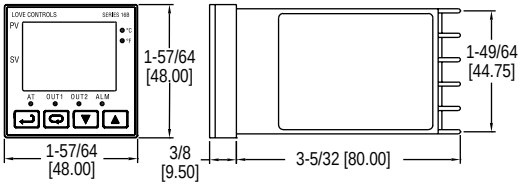

16B

8B

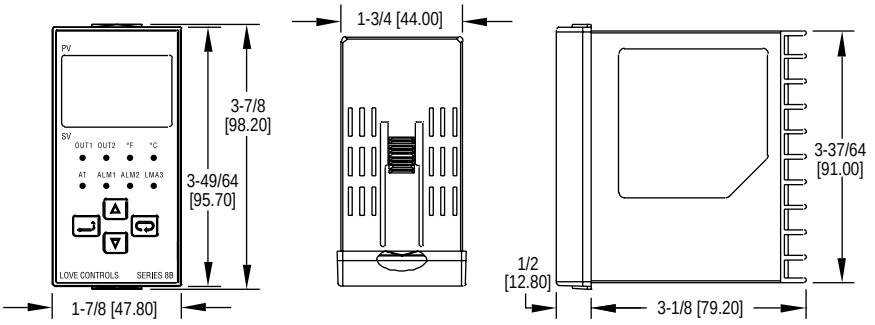

8B

4B

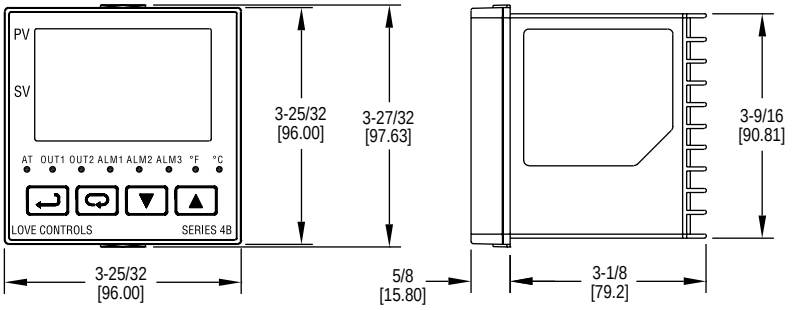

4B

The **Series 32B, 16B, 8B, & 4B Temperature/Process Loop Controllers** offer advanced control features for the most demanding temperature or process applications. Offered in 4 standard DIN cutout housing sizes, these controllers are designed with dual, 4 digit LED displays for local indication of the process value, set point, and output conditions.

BENEFITS/FEATURES

- Universal input accepts process transmitters, RTD's or thermocouple signals
- On/off, PID, or manual output control
- RS-485 standard on all models
- Stage control program for up to 64 ramp/soak actions

APPLICATIONS

- Oven, boiler, or chiller control
- Environmental chambers
- Hot plates / melt pots
- Medical equipment
- Packaging equipment
- Food service equipment

SPECIFICATIONS

Inputs: Thermocouple, RTD, DC voltages or DC current.
Display: Two 4 digit, 7 segment LED's. PV: Red, SV: Green.
Accuracy: ±0.25% span, ±1 least significant digit.
Power Requirements: 100-240 VAC, 50/60 Hz; Optional 24 VDC.
Power Consumption: 5 VA max.
Operating Temperature: 32 to 122°F (0 to 50°C).
Memory Backup: Nonvolatile memory.
Control Output Ratings: Relay: SPST, 3 A @ 250 VAC resistive for 32B; SPST, 5 A @ 250 VAC resistive for 16B; SPDT, 5 A @ 250 VAC resistive for 8B and 4B; Voltage pulse: 14 VDC (max. 40 mA); Current: 4-20 mA; Linear voltage: 0-10 V.
Communication: RS-485 Modbus® ASCII/RTU communication protocol.
Weight: 32B and 16B: 4 oz (114 g); 8B and 4B: 15 oz (425 g).
Front Panel Rating: IP56.
Compliance: CE, cULus.

TEMPERATURE/PROCESS LOOP CONTROLLERS

Universal Input, Dual Control Output, RS-485 Communication

MODEL CHART - 32B			
Model	**Supply Power**	**Output 1**	**Output 2**
32B-23	100 to 240 VAC	Voltage pulse	Relay
32B-23-LV	24 VDC	Voltage pulse	Relay
32B-33	100 to 240 VAC	Relay	Relay
32B-33-LV	24 VDC	Relay	Relay
32B-53	100 to 240 VAC	Current	Relay
32B-53-LV	24 VDC	Current	Relay

MODEL CHART - 16B			
Model	**Supply Power**	**Output 1**	**Output 2**
16B-23	100-240 VAC	Voltage pulse	Relay
16B-23-LV	24 VDC	Voltage pulse	Relay
16B-33	100-240 VAC	Relay	Relay
16B-33-LV	24 VDC	Relay	Relay
16B-53	100-240 VAC	Current	Relay
16B-53-LV	24 VDC	Current	Relay
16B-63	100-240 VAC	Linear voltage	Relay
16B-63-LV	24 VDC	Linear voltage	Relay

MODEL CHART - 8B			
Model	**Supply Power**	**Output 1**	**Output 2**
8B-23	100-240 VAC	Voltage pulse	Relay
8B-33	100-240 VAC	Relay	Relay
8B-33-LV	24 VDC	Relay	Relay
8B-53	100-240 VAC	Current	Relay
8B-53-LV	24 VDC	Current	Relay
8B-63	100-240 VAC	Linear voltage	Relay
8B-63-LV	24 VDC	Linear voltage	Relay

MODEL CHART - 4B			
Model	**Supply Power**	**Output 1**	**Output 2**
4B-23	100-240 VAC	Voltage pulse	Relay
4B-23-LV	24 VDC	Voltage pulse	Relay
4B-33	100-240 VAC	Relay	Relay
4B-33-LV	24 VDC	Relay	Relay
4B-53	100-240 VAC	Current	Relay
4B-53-LV	24 VDC	Current	Relay
4B-63	100-240 VAC	Linear voltage	Relay
4B-63-LV	24 VDC	Linear voltage	Relay

Application Note:
When using a relay output to operate a contactor or solenoid an R/C snubber should be installed across the coil to prevent damage to the controller relays.

INPUT RANGES	
Input Types	**Range**
K Type TC	-328 to 2372°F (-200 to 1300°C)
J Type TC	-148 to 2192°F (-100 to 1200°C)
T Type TC	-328 to 752°F (-200 to 400°C)
E Type TC	32 to 1112°F (0 to 600°C)
W Type TC	-328 to 2372°F (-200 to 1300°C)
R Type TC	32 to 3092°F (0 to 1700°C)
S Type TC	32 to 3092°F (0 to 1700°C)
B Type TC	212 to 3272°F (100 to 1800°C)
L Type TC	-328 to 1562°F (-200 to 850°C)
U Type TC	-328 to 932°F (-200 to 500°C)
JPt 100 RTD	-4 to 752°F (-20 to 400°C)
Pt 100 RTD	-328 to 1562°F (-200 to 850°C)
0-5 V	-999 to 9999
0-10 V	-999 to 9999
0-20 mA*	-999 to 9999
4-20 mA*	-999 to 9999
0-ß50 mV	-999 to 9999
*Requires 250 Ω precision resistor across input terminals.	

ACCESSORIES	
Model	**Description**
A-277	250 Ω precision resistor
A-600	R/C snubber
A-900	Weatherproof front mount enclosure
A-901	Weatherproof internal mount enclosure with window
MN-1	Mini-Node™ RS-485 to USB converter
SCD-SW	Configuration software

A-600

MN-1

A-900

A-901

Modbus® is a registered trademark of Schneider Electric USA, Inc.

Dwyer

SERIES 16G, 8G, & 4G

TEMPERATURE/PROCESS LOOP CONTROLLERS

Universal Input, Dual Output, On/Off PID or FUZZY Logic Output Control

16G

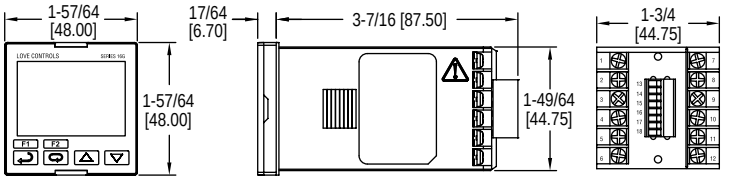

16G

8G

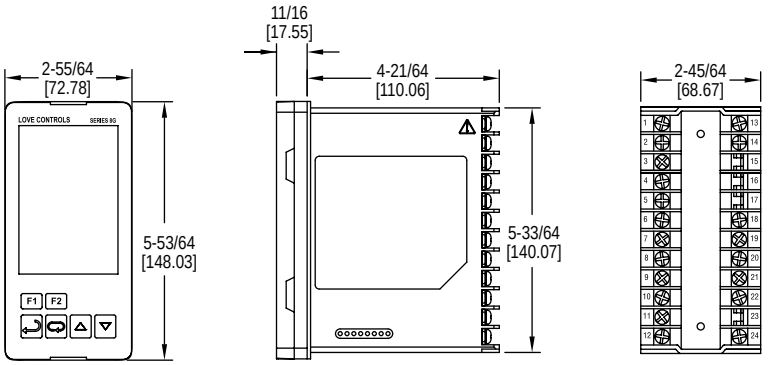

8G

4G

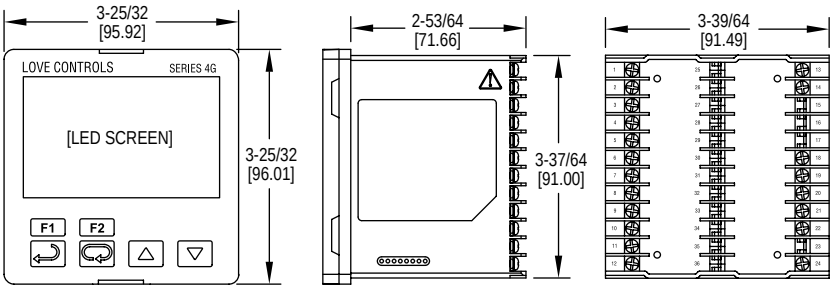

4G

The **Series 16G, 8G, & 4G Temperature/Process Loop Controllers** allow for monitoring and control of temperature or process conditions. The controller features two independent control outputs for dual loop control using on/off, auto-tune or self-tune PID, fuzzy logic, or manual control methods. RS-485 interface is included with Modbus® communication protocol, for easy bench-top configuration or integration with a PLC or data control system.

BENEFITS/FEATURES

- On/off, PID, fuzzy logic, or manual output control
- Constant, sloped, program (ramp/soak), or remote set point control
- 2 primary control outputs, 2 secondary/alarm relay outputs, and RS-485 standard on all models
- Remote set point, input retransmission, or event input functions available with optional hardware

APPLICATIONS

- Oven control
- Packaging equipment
- Parts washers

SPECIFICATIONS

Inputs: Thermocouple, RTD, DC voltages or DC current.
Display: Process value: 4 digit, 0.47˝ H (12 mm), orange LCD; Set point value: 4 digit, 0.47˝ H (12 mm), green LCD.
Accuracy: ±1.8°F plus ±0.3% of span (±1°C plus ±0.3% of span) at 77°F (25°C) after 20 minutes warm up.
Power Requirements: 100-240 VAC -20/+8%, 50/60 Hz; Optional 24 VDC, ±10%.
Power Consumption: 5 VA max.
Operating Temperature: 32 to 122°F (0 to 50°C).
Storage Temperature: -42 to 150°F (-20 to 65°C).
Memory Backup: Nonvolatile memory.
Control Output Ratings: Relay: SPST, 5 A @ 250 VAC resistive; Voltage pulse: 12 V (max. 40 mA); Current: 4-20 mA; Linear voltage: 0-10 V.
Alarm Relay Ratings: 3 A @ 250 VAC resistive.
Communication: RS-485 Modbus® ASCII/RTU communication protocol.
Weight: 9 oz (255g).
Front Panel Rating: IP66.
Compliance: CE, cULus.

TEMPERATURE/PROCESS LOOP CONTROLLERS

Universal Input, Dual Output, On/Off PID or FUZZY Logic Output Control

MODEL CHART - 16G				
Model	**Output 1**	**Output 2**	**Option 1**	**Option 2**
16G-23-11	Voltage pulse	Relay	Event	Event
16G-23-31	Voltage pulse	Relay	Input retrans.	Event
16G-23-32	Voltage pulse	Relay	Input retrans.	Remote SP
16G-33-11	Relay	Relay	Event	Event
16G-33-31	Relay	Relay	Input retrans.	Event
16G-33-32	Relay	Relay	Input retrans.	Remote SP
16G-53-11	Current	Relay	Event	Event
16G-53-31	Current	Relay	Input retrans.	Event
16G-53-32	Current	Relay	Input retrans.	Remote SP
16G-63-11	Linear voltage	Relay	Event	Event
16G-63-31	Linear voltage	Relay	Input retrans.	Event
16G-63-32	Linear voltage	Relay	Input retrans.	Remote SP

MODEL CHART - 8G				
Model	**Output 1**	**Output 2**	**Option 1**	**Option 2**
8G-23-31	Voltage pulse	Relay	Input retrans.	Event
8G-33-31	Relay	Relay	Input retrans.	Event
8G-33-32	Relay	Relay	Input retrans.	Remote SP
8G-53-31	Current	Relay	Input retrans.	Event
8G-53-32	Current	Relay	Input retrans.	Remote SP

MODEL CHART - 4G				
Model	**Output 1**	**Output 2**	**Option 1**	**Option 2**
4G-23-11	Voltage pulse	Relay	Event	Event
4G-23-32	Voltage pulse	Relay	Input retrans.	Remote SP
4G-33-11	Relay	Relay	Event	Event
4G-33-31	Relay	Relay	Input retrans.	Event
4G-33-32	Relay	Relay	Input retrans.	Remote SP
4G-53-11	Current	Relay	Event	Event
4G-53-31	Current	Relay	Input retrans.	Event
4G-53-32	Current	Relay	Input retrans.	Remote SP
4G-63-11	Linear voltage	Relay	Event	Event
4G-63-31	Linear voltage	Relay	Input retrans.	Event
4G-63-32	Linear voltage	Relay	Input retrans.	Remote SP

Application Note:
When using a relay output to operate a contactor or solenoid an R/C snubber should be installed across the coil to prevent damage to the controller relays.

INPUT RANGES	
Input Types	**Range**
K Type TC	-328 to 2372°F (-200 to 1300°C)
J Type TC	-148 to 2192°F (-100 to 1200°C)
T Type TC	-328 to 752°F (-200 to 400°C)
E Type TC	32 to 1112°F (0 to 600°C)
N Type TC	-328 to 2372°F (-200 to 1300°C)
R Type TC	32 to 3092°F (0 to 1700°C)
S Type TC	32 to 3092°F (0 to 1700°C)
B Type TC	212 to 3272°F (100 to 1800°C)
L Type TC	-328 to 1562°F (-200 to 850°C)
U Type TC	-328 to 932°F (-200 to 500°C)
TXK Type TC	-328 to 1472 °F (-200 to 800 °C)
JPt 100 RTD	-4 to 752 °F (-20 to 400 °C)
Pt 100 RTD	-328 to 1562 °F (-200 to 850 °C)
Ni 120 RTD	-112 to 572 °F (-80 to 300 °C)
Cu 50 RTD	-58 to 302 °F (-50 to 150 °C)
0-5 V	-999 to 9999
0-10 V	-999 to 9999
0-20 mA*	-999 to 9999
4-20 mA*	-999 to 9999
0-50 mV	-999 to 9999
*Requires 250 Ω precision resistor across input terminals.	

ACCESSORIES	
Model	**Description**
A-277	250 Ω precision resistor
A-600	R/C snubber
A-900	Weatherproof front mount enclosure
A-901	Weatherproof internal mount enclosure with window
MN-1	Mini-Node™ RS-485 to USB Converter
SCD-SW	Configuration software

A-600

MN-1

A-900

A-901

Modbus® is a registered trademark of Schneider Electric USA, Inc.

Dwyer

SERIES TID

TEMPERATURE/PROCESS INDICATOR

Low Cost, 3-Digit Display, 1% Accuracy

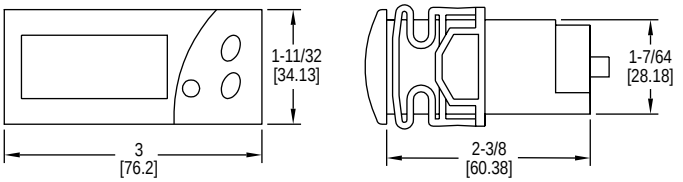

The **Series TID Temperature/Process Indicator** displays temperature or a process value measured by a PTC or NTC thermistor or a 4-20 mA transmitter.

BENEFITS/FEATURES
- Thermistor or transmitter input models available
- 3 digit bright LED

APPLICATIONS
- Panel process indication
- Refrigerators, walk in coolers

MODEL CHART			
Model	**Input**	**Supply Power**	**Unit**
TID-1110	PTC thermistor	115 VAC	°F
TID-1120	PTC thermistor	115 VAC	°C
TID-1410	PTC thermistor	24 VAC/DC	°F
TID-3100	4-20 mA	115 VAC	None
TID-3200	4-20 mA	230 VAC	None
TID-3400	4-20 mA	24 VAC/DC	None

SPECIFICATIONS

Range: -58 to 302°F (thermistor); -999 to 999 counts (4-20 mA).
Input: PTC/NTC thermistor or 4-20 mA.
Power Requirements: 115 VAC, 230 VAC, 24 VAC/DC.
Accuracy: > 1%.
Display: 3-digits; red, green or blue display.
Resolution: 1° or 0.1 count.
Front Panel Rating: IP64 (NEMA 3R).
Output: 5/12 VDC (model dependent).
Weight: 2.3 oz (65 g).
Compliance: CE, cURus.

ACCESSORIES

See page reference ❶ below.

❶**Digital Temperature Switch Probes and Accessories: See page 129 (Series TS-Probes)**

SERIES 16L

LIMIT CONTROL

FM Approved, Large Dual Display, Universal Input

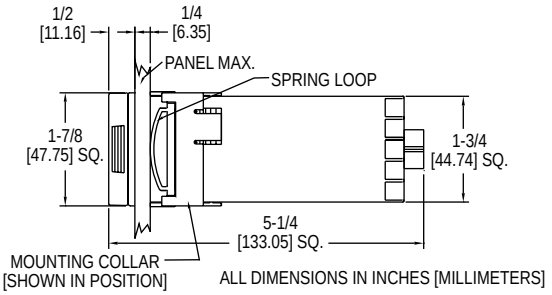

Panel cutout 1.77˝ + 0.02˝ [45 mm + 0.6 mm] square

The **Series 16L Limit Control** offers FM approved limit control with universal input, single set point or dual set point control.

BENEFITS/FEATURES
- Remote or integral reset button
- Peak and valley temperature indication
- Open sensor protection

APPLICATIONS
- Gas fired heater limit control

MODEL CHART		
Model	**Output A**	**Output B**
16L2030	N.O. relay	None
16L2034	N.O. relay	N.C. relay
Note: For other configurations, see website.		

SPECIFICATIONS

Selectable Inputs: 10 thermocouple, 4 RTD, DC voltage, or DC current selectable.
Display: Two 4 digit, 7 segment 0.3˝ (7.62 mm) high LEDs.
Accuracy: ±0.25% of span, ±1 least significant digit.
Power Requirements: 100-240 VAC, nominal, +10 -15%, 50 to 400 Hz. single phase; 132-240 VDC, nominal, +10 -20%.
Power Consumption: 5 VA maximum.
Temperature Limits: 14 to 131°F (-10 to 55°C).
Memory Backup: Nonvolatile memory. No batteries required.
Output: Relay: SPST, 3 A @ 240 VAC resistive; 1.5 A @ 240 VAC inductive.
Weight: 8 oz (227 g).
Front Panel Rating: NEMA 4X (IP66).
Compliance: FM, cULus.

OPTIONS	
To order add suffix:	**Description**
-934	Process signal output, isolated 0-20 mADC
-936	Process signal output, isolated 0-10 VDC
-992	RS-RS-485 serial communications
-993	RS-RS-232 serial communications

ACCESSORIES	
Model	**Description**
A-600	R/C snubber

Dwyer

SERIES TSF

THERMOCOUPLE LIMIT CONTROL

FM Approved Temperature Limit Control

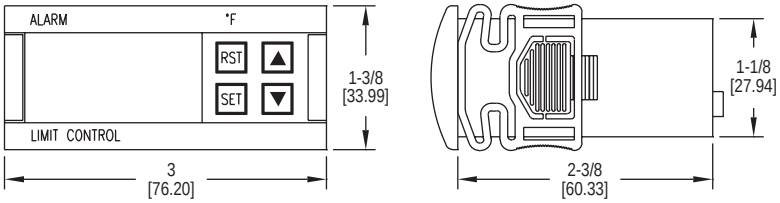

Panel cutout 2-51/64˝ x 1-9/64˝ (71 x 29 mm)

The **Series TSF Thermocouple Limit Control** provides audible alarm status along with a relay output. Unit allows the user to easily select automatic or manual reset via a built in reset button on the front panel or an external contact.

BENEFITS/FEATURES
- FM approved temperature limiting control
- Integral and remote reset capabilities

APPLICATIONS
- Gas fired oven and burner control

MODEL CHART		
Model	**Supply Power**	**Unit**
TSF-4010	115 VAC	°F
TSF-4011	115 VAC	°C
TSF-4021	230 VAC	°C
TSF-4040	24 VAC/VDC	°F

ACCESSORIES
See page reference ❶ below.

SPECIFICATIONS
Probe Range: 32 to 999°F (0 to 700°C) for Type J thermocouple; 32 to 999°F (0 to 999°C) for type K or S thermocouples.
Input: Type J, K or S thermocouple.
Output: SPDT relay rated 16 A @ 240 VAC resistive.
Horsepower Rating (HP): 1 HP.
Control Type: ON/OFF; manual/automatic reset.
Power Requirements: 115 VAC, 230 VAC, 12 VAC/VDC or 24 VAC/VDC (depending on model).
Power Consumption: 4 VA.
Accuracy: ±1% FS.
Display: 3-digit, red, 1/2˝ (12.7 mm) digits, plus sign.
Resolution: 1°.
Memory Backup: Nonvolatile memory.
Temperature Limits: Ambient: 32 to 150°F (0 to 65°C); Storage: -4 to 176°F (-20 to 80°C).
Weight: 2.3 oz (65 g).
Front Panel Rating: IP64 (NEMA 3R).
Agency Approvals: CE, FM, cURus.

❶**Digital Temperature Switch Probes and Accessories: See page 129 (Series TS-Probes)**

SERIES TSF-DF

THERMOCOUPLE LIMIT CONTROL

UL Approved Temperature Limit Control

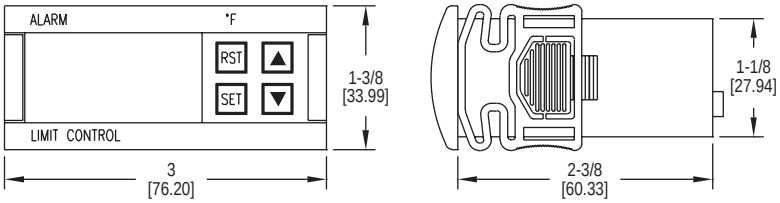

Panel cutout 2-51/64˝ x 1-9/64˝ (71 x 29 mm)

The **Series TSF-DF Thermocouple Limit Control** is a UL approved temperature limit control that provides visual alarm status along with a `relay output. The Series TSF-DF controls have a built in reset button on the front panel or can accept an external reset signal.
Program settings on model TSF-DF controls cannot be changed through the buttons on the device. It is necessary to purchase a model TSF-MDF and a model TS2-K in addition to the model TSF-DF. Desired program parameters are entered on a TSF-MDF programming control. Using the TS2-K configuration key, the parameters can be easily copied from the TSF-MDF and transferred to the TSF-DF Limit Alarms.

BENEFITS/FEATURES
- UL approved limit control

APPLICATIONS
- Gas fired oven and burner control

MODEL CHART			
Model	**Control**	**Supply Power**	**Unit**
TSF-4010-DF	Limit alarm	115 VAC	°F
TSF-4011-DF	Limit alarm	115 VAC	°C
TSF-4021-DF	Limit alarm	230 VAC	°C
TSF-4040-DF	Limit alarm	24 VAC/VDC	°F
TSF-4010-MDF	Programming control	115 VAC	°F
TSF-4011-MDF	Programming control	115 VAC	°C
TSF-4021-MDF	Programming control	230 VAC	°C
TSF-4040-MDF	Programming control	24 VAC/VDC	°F

SPECIFICATIONS
Probe Range: 32 to 999°F (0 to 700°C) for thermocouple J type; 32 to 999°F (0 to 999°C) for thermocouple K or S type.
Input: Type J, K, or S thermocouple.
Output: NO SPST relay rated 16 A @ 240 VAC resistive.
Horsepower Rating (HP): 1 HP.
Control Type: ON/OFF; manual/automatic reset.
Power Requirements: See model chart.
Power Consumption: 4 VA @ 230 VAC.
Accuracy: ±1% FS.
Display: 3-digit, red, 1/2˝ (12.7 mm) digits, plus sign.
Resolution: 1°.
Memory Backup: Nonvolatile memory.
Ambient Operating Temperature: 32 to 140°F (0 to 60°C).
Storage Temperature: -4 to 176°F (-20 to 80°C).
Weight: 2.3 oz (65 g).
Front Panel Rating: IP64.
Agency Approvals: CE, cURus (DF models only).

ACCESSORIES
See page reference ❶ below.

❶**Digital Temperature Switch Probes and Accessories: See page 129 (Series TS-Probes)**

Dwyer

SERIES SCD

DIN RAIL TEMPERATURE/PROCESS CONTROLLERS

Universal Inputs, Up to 8 PID Loops, Modbus® Communications

Master controller

Slave controller

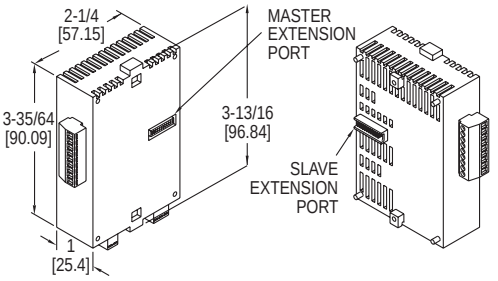

The **Series SCD DIN Rail Temperature/Process Controllers** offer multiple PID loops in a compact size. Each SCD-1000 master controller can be combined with up to seven SCD-2000 slave controllers without any wires. Each controller has one universal input, one relay output and one user selected output.

BENEFITS/FEATURES
- Expandable from 1 to 8 process control loops
- Universal transmitter or temperature sensor inputs
- RS-485 Modbus® communication
- Dual loop or single loop/alarm output control

APPLICATIONS
- Oven, boiler, or chiller control
- Hot plates/melt pots
- Packaging equipment
- Environmental chambers
- Medical equipment
- Food service equipment

SPECIFICATIONS

Inputs: Thermocouple, RTD, DC linear voltage, and DC currents.*
Supply Voltage: 24 VDC.
Power Consumption: 3 W.
Operating Temperature: 32 to 122ºF (0 to 50ºC).
Memory Backup: Non-volatile.
Control Output Ratings: Relay: 3 A @ 250 VAC resistive; Voltage pulse: 12 VDC, max. output current: 40 mA; Current: 4-20 mA output; Linear voltage: 0-10 VDC.
Communication: RS-485 Modbus® A-5-11/RTU communication protocol.
Weight: 2.7 oz (76.5 g).
Agency Approvals: CE, cULus.

MODEL CHART

Model	Controller	Output 1	Output 2
SCD-1023	Master	Voltage pulse	Relay
SCD-1033	Master	Relay	Relay
SCD-1053	Master	Current	Relay
SCD-1063	Master	Linear voltage	Relay
SCD-2023	Slave	Voltage pulse	Relay
SCD-2033	Slave	Relay	Relay
SCD-2053	Slave	Current	Relay
SCD-2063	Slave	Linear voltage	Relay

Note: DC current input requires 250 Ω precision resistor.

ACCESSORIES

Model	Description
A-277	250 Ω precision resistor
A-600	R/C snubber
MN-1	Mini-Node™ USB/RS-485 converter
SCD-PS	100-240 VAC/VDC to 24 VDC power supply
SCD-SW	Configuration software

Modbus® is a registered trademark of Schneider Automation, Inc.

SERIES TSDIN

DIN RAIL MOUNT TEMPERATURE SWITCH

HACCP Alarm Logging, Intelligent Defrost

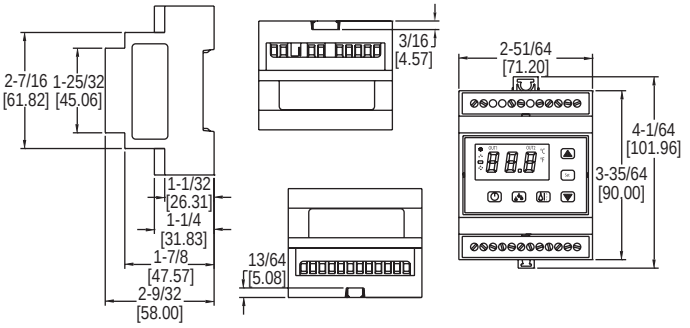

The **Series TSDIN DIN Rail Mount Temperature Switch** is ideally designed to control compressor, defrost, and fan cycles in refrigeration applications. The digital input can be used to remotely trigger a defrost cycle, monitor cooler door status, or act as an external alarm. Three other probe inputs measure cabinet, defrost, and product temperature. Programming performed on the 6 button keypad or with the Model TS2-K configuration key.

BENEFITS/FEATURES
- 3 temperature probe inputs
- Real-time clock used for HACCP logging of temperature limit alarms or loss of power
- Intelligent Defrost parameters manage defrost cycle in order to save energy cost

APPLICATIONS
- Refrigerated cabinets
- Walk in coolers
- Applications requiring defrost cycles

MODEL CHART

Model	Supply Power	# of Outputs	Display Color
TSDIN-013	115 VAC	1, 2, 3	Red
TSDIN-015	115 VAC	1, 2, 3, 4, 5	Red
TSDIN-023	230 VAC	1, 2, 3	Red
TSDIN-025	230 VAC	1, 2, 3, 4, 5	Red
TSDIN-033	12 VAC/VDC	1, 2, 3	Red
TSDIN-043	24 VAC/VDC	1, 2, 3	Red
TSDIN-213	115 VAC	1, 2, 3	Blue
TSDIN-215	115 VAC	1, 2, 3, 4, 5	Blue
TSDIN-223	230 VAC	1, 2, 3	Blue
TSDIN-225	230 VAC	1, 2, 3, 4, 5	Blue
TSDIN-233	12 VAC/VDC	1, 2, 3	Blue
TSDIN-243	24 VAC/VDC	1, 2, 3	Blue

SPECIFICATIONS

Probe Range: PTC: -58 to 302°F (-50 to 150°C); NTC: -58 to 230°F (-50 to 110°C).
Input: PTC/NTC.
Output: Output 1: SPST relay rated 16A @ 240 VAC resistive, 10 FLA, 60 LRA, 1HP @ 240 VAC inductive; Output 2: SPDT relay rated 8A @ 240 VAC resistive; Output 3: SPST relay rated 8A @ 240 VAC resistive; Output 4: SPDT relay rated 8A @ 240 VAC resistive; Output 5: SPST relay rated 16A @ 240 VAC resistive, 10 FLA, 60 LRA, 1HP @ 240 VAC inductive.
Control Type: On/off.
Power Requirement: 115 VAC, 230 VAC, 12 VAC/VDC, 24 VAC/VDC (±10% depending on model.
Power Consumption: 6 VA.
Accuracy: Better than 1% of FS.
Display: 3-digits plus sign.
Resolution: 0.1°.
Memory Backup: Non-volatile memory.
Temperature Limits: Operating: 32 to 131°F (0 to 55°C); Storage: -4 to 176°F (-20 to 80°C).
Weight: 10.8 oz (306 g).
Agency Approvals: CE, cURus.

ACCESSORIES

See page reference ❶ below.

❶**Digital Temperature Switch Probes and Accessories: See page 129 (Series TS-Probes)**

Dwyer
SERIES TCS

THERMOCOUPLE TEMPERATURE SWITCH

Heating and Cooling Control, 16 Amp Rating, Two Alarms

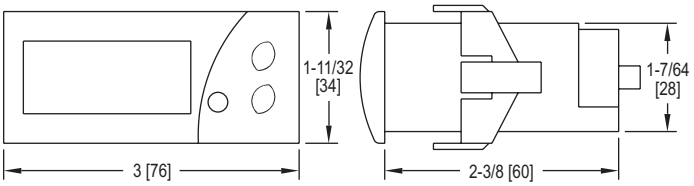

Panel cutout 2-51/64″ x 1-9/64″ (71 mm x 29 mm)

The **Series TCS Thermocouple Temperature Switch** monitors and controls temperature while offering a wide temperature range, two selectable alarm sets, and an internal buzzer indicating alarm condition or error.

BENEFITS/FEATURES
- Heating or cooling modes
- Internal alarm buzzer
- Configuration key to quickly load parameters from one unit to another

APPLICATIONS
- Food service equipment
- Industrial process control

MODEL CHART

Model	Supply Power	Unit
TCS-4010	115 VAC	°F
TCS-4011	115 VAC	°C
TCS-4020	230 VAC	°F
TCS-4021	230 VAC	°C
TCS-4030	12 VAC/VDC	°F
TCS-4031	12 VAC/VDC	°C
TCS-4040	24 VAC/VDC	°F

ACCESSORIES

See page reference ❶ below.

SPECIFICATIONS

Probe Range: 32 to 999°F (0 to 700°C) for Type J thermocouple; 32 to 999°F (0 to 999°C) for Type K thermocouple.
Input: Type J or K thermocouple.
Output: SPDT relay rated 16 A @ 240 VAC resistive.
Horsepower Rating (HP): 1 HP.
Control Type: ON/OFF.
Power Requirements: 115 VAC, 230 VAC, 12 VAC/VDC or 24 VAC/VDC (depending on model).
Accuracy: ±1% FS.
Display: 3-digit, red, 1/2″ (12.7 mm) digits, plus sign.
Resolution: 1°.
Memory Backup: Nonvolatile memory.
Temperature Limits: Ambient: 32 to 158°F (0 to 70°C); Storage: -4 to 176°F (-20 to 80°C).
Weight: 2.3 oz (65 g).
Front Panel Rating: IP64.
Agency Approvals: CE, cURus.

❶Digital Temperature Switch Probes and Accessories: See page 129 (Series TS-Probes)

Dwyer

SERIES TST

DIGITAL TEMPERATURE SWITCH

Heating and Cooling Control, 16 Amp Rating

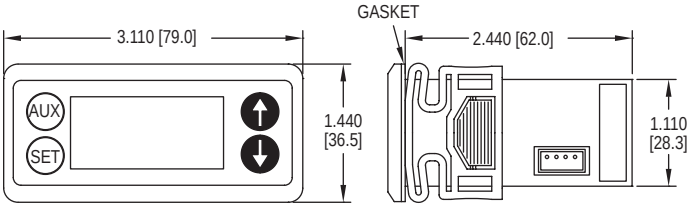

Panel cutout 2-51/64˝ x 1-9/64˝ (71 x 29 mm)

The **Series TST Digital Temperature Switch** is designed with many heating and cooling applications in mind. This low cost switch is simple to set up with one probe input and SPDT switch output. Programming performed using either the front keypad or through a TS2-K programming key.

BENEFITS/FEATURES
- Buzzer indicates probe/memory error or high/low temperature alarm conditions
- Capacitive buttons offer clean panel face design

APPLICATIONS
- Refrigeration
- Holding ovens
- Boilers
- Brewing systems

MODEL CHART

Model	Supply Power
TST-011	115 VAC
TST-021	230 VAC
TST-031	12 VAC/VDC
TST-041	24 VAC/VDC

ACCESSORIES

See page reference ❶ below.

SPECIFICATIONS

Probe Range: PTC: -58 to 302°F (-50 to 150°C); NTC: -58 to 230°F (-50 to 110°C).
Input: PTC (1000 Ω @ 25°C) or NTC (10 KΩ @ 25°C) thermistor.
Output: SPDT relay rated 16 A @ 240 VAC resistive, 10 FLA, 60 LRA.
Horsepower Rating (HP): 1 HP.
Control Type: On/Off.
Power Requirements: 115 VAC, 230 VAC, 24 VAC/VDC, or 12 VAC/VDC.
Power Consumption: 4 VA @ 115/230 VAC; 1.5 VA @ 12/24 VAC/VDC.
Accuracy: ±1% FS.
Display: 3-digit, plus sign.
Resolution: 0.1°.
Memory Backup: Nonvolatile memory.
Ambient Temperature: 32 to 131°F (0 to 55°C).
Storage Temperature: -4 to 176°F (-20 to 80°C).
Weight: 115 and 230 V models: 7.2 oz (204 g); 12 and 24 V models: 4.8 oz (136 g).
Front Panel Rating: IP65.
Agency Approvals: CE, cURus.

❶**Digital Temperature Switch Probes and Accessories: See page 129 (Series TS-Probes)**

SERIES TSXT

DIGITAL TEMPERATURE SWITCH

Refrigeration Control, Up To 3 Probe Inputs and 3 Relay Outputs

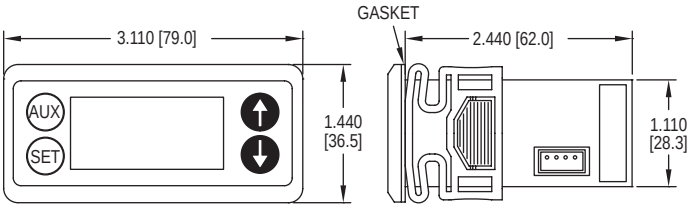

Panel cutout 2-51/64˝ x 1-9/64˝ (71 x 29 mm)

The **Series TSXT Digital Temperature Switch** is designed for refrigeration control. It accepts PTC or NTC temperature probe types and can control the compressor, defrost, fan, alarm, and light in a refrigeration system. Master/slave configurations allow synchronization of defrost cycles between different units. Programming is performed through the front keypad, or by using the TS2-K programming key.

BENEFITS/FEATURES
- Models available with 1, 2, or 3 relay outputs
- 3 temperature inputs and one digital input for complete refrigeration control
- Configuration key available for programing multiple units
- Capacitive buttons offer clean panel face design

APPLICATIONS
- Refrigerated cabinets
- Walk in coolers
- Applications requiring defrost cycles

MODEL CHART

Model	Supply Power	Outputs	Model	Supply Power	Outputs
TSXT-211	115 VAC	1	**TSXT-232**	12 VAC/VDC	2
TSXT-221	230 VAC	1	**TSXT-242**	24 VAC/VDC	2
TSXT-231	12 VAC/VDC	1	**TSXT-213**	115 VAC	3
TSXT-241	24 VAC/VDC	1	**TSXT-223**	230 VAC	3
TSXT-212	115 VAC	2	**TSXT-233**	12 VAC/VDC	3
TSXT-222	230 VAC	2	**TSXT-243**	24 VAC/VDC	3

ACCESSORIES

See page reference ❶ below.

SPECIFICATIONS

Probe Range: PTC: -58 to 302°F (-50 to 150°C); NTC: -58 to 230°F (-50 to 110°C).
Input: PTC (1000 Ω @ 25°C) or NTC (10 KΩ @ 25°C) thermistor.
Output: Relay 1: SPST relay rated 16 A @ 240 VAC resistive, 10 FLA, 60 LRA; Relay 2: SPST relay rated 5 A @ 240 VAC resistive; Relay 3: SPST relay rated 8 A @ 240 VAC resistive.
Horsepower Rating (HP): 1 HP (Relay 1).
Control Type: On/off with defrost options.
Power Requirements: 115 VAC, 230 VAC, 24 VAC/VDC, or 12 VAC/VDC.
Power Consumption: 3.6 VA @ 115/230 VAC; 1.5 VA @ 12/24 VAC/VDC.
Accuracy: ±1% FS.
Display: 3-digit, plus sign.
Resolution: 0.1°.
Memory Backup: Nonvolatile memory.
Ambient Operating Temperature: 32 to 131°F (0 to 55°C).
Storage Temperature: -4 to 176°F (-20 to 80°C).
Weight: 115 and 230 V models: 7.2 oz (204 g); 12 and 24 V models: 4.8 oz (136 g).
Front Panel Rating: IP65.
Agency Approvals: CE, cURus.

❶**Digital Temperature Switch Probes and Accessories: See page 129 (Series TS-Probes)**

Dwyer

SERIES TS2

DIGITAL TEMPERATURE SWITCH

Easy Multi-Unit Programming, 16A SPDT Relay Output

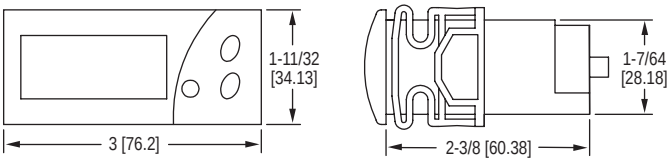

Panel cutout 2-51/64˝ x 1-9/64˝ (71 mm x 29 mm)

The **Series TS2 Digital Temperature Switch** offers an easy to use OEM friendly solution to monitor and control temperature in heating or cooling applications.

BENEFITS/FEATURES
- Simple to use temperature control device
- Configuration key

APPLICATIONS
- Refrigerators
- Chillers
- Food service equipment
- Medical sterilizers or equipment

MODEL CHART

Model	Supply Power	Unit
TS2-010	115 VAC	°F
TS2-011	115 VAC	°C
TS2-020	230 VAC	°F
TS2-030	12 VAC/VDC	°F
TS2-040	24 VAC/VDC	°F
TS2-041	24 VAC/VDC	°C

ACCESSORIES

See page reference ❶ below.

SPECIFICATIONS

Probe Range: -58 to 302°F (-50 to 150°C).
Input: PTC (1000 Ω @ 25°C).
Output: 16 A SPDT relay @ 250 VAC resistive, 5 A inductive.
Horsepower Rating (HP): 1 HP.
Control Type: On/off.
Power Requirements: 115 VAC, 230 VAC, 12 VAC/VDC or 24 VAC/VDC.
Accuracy: ±1% FS.
Display: 3-digit, red, 1/2˝ digits.
Resolution: 1°.
Memory Backup: Nonvolatile memory.
Temperature Limits: Ambient: 32 to 158°F (0 to 70°C).
Storage Temperature: -4 to 176°F (-20 to 80°C).
Weight: 2.3 oz (65 g).
Front Panel Rating: IP64.
Agency Approvals: CE, cURus.

❶**Digital Temperature Switch Probes and Accessories: See page 129 (Series TS-Probes)**

SERIES TSS2

DUAL STAGE TEMPERATURE SWITCH

Two Independent Relay Outputs, Heating or Cooling Control

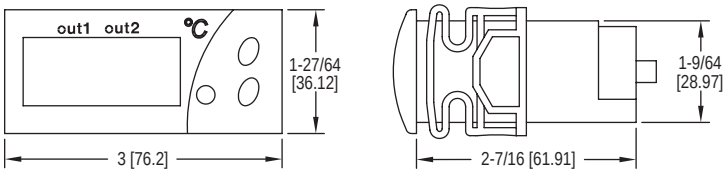

Panel cutout 2-51/64˝ x 1-9/64˝ (71 mm x 29 mm)

The **Series TSS2 Dual Stage Temperature Switch** features two independent sensor inputs and control outputs in one device.

BENEFITS/FEATURES
- Simple to use dual temperature control device
- Configuration key

APPLICATIONS
- Refrigerators
- Chillers
- Food service equipment
- Medical sterilizers or equipment

MODEL CHART

Model	Supply Power	Unit
TSS2-2100	115 VAC	°F
TSS2-2110	115 VAC	°C
TSS2-2210	230 VAC	°C
TSS2-2300	12 VAC/DC	°F
TSS2-2400	24 VAC/DC	°F

ACCESSORIES

See page reference ❶ below.

SPECIFICATIONS

Probe Range: PTC: - 58 to 302°F (-50 to 150°C); NTC: -58 to 230°F (-50 to 110°C).
Input: PTC (1000 Ω @ 25°C); NTC (10 kΩ @ 25°C).
Outputs: OUT1=SPDT relay rated 16 A @ 240 VAC resistive; OUT2=SPDT relay rated 8 A @ 240 VAC resistive.
Horsepower Rating (HP): 1 HP (OUT1).
Power Requirements: 115 VAC, 230 VAC, 12 VAC/VDC or 24 VAC/VDC (depending on model).
Accuracy: ±1% FS.
Display: 3-digit and sign, red LED.
Resolution: 0.1° (< 100°); 1° (≥ 100°).
Memory Backup: Nonvolatile memory.
Temperature Limit: Ambient: 32 to 158°F (0 to 70°C).
Storage Temperature: -4 to 176°F (-20 to 80°C).
Dimensions: 3 x 1-27/64 x 2-7/16 in.
Weight: 2.3 oz (65 g).
Front Panel Rating: IP64.
Agency Approvals: CE, cURus.

❶**Digital Temperature Switch Probes and Accessories: See page 129 (Series TS-Probes)**

Dwyer

SERIES TSW

WEATHER PROOF DIGITAL TEMPERATURE SWITCH

NEMA 4X Housing, Single or Dual Stage, 20 A Contact Rating

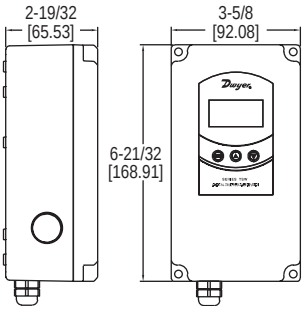

The **Series TSW Weather Proof Digital Temperature Switch** combines the trusted, reliable TS family of temperature controls and an installation friendly weatherproof enclosure. The bright, easy-to-read LED display shows the current output status and the temperature measurement.

BENEFITS/FEATURES
- Weatherproof housing
- Single or dual stage models
- Configuration key
- Physical and passcode parameter setting protection

APPLICATIONS
- Chillers
- Walk in cooler
- Woodboilers
- Brewing systems

MODEL CHART

Model	Description	Temperature Probe Included	Supply Power
TSW-150	Single stage	TS-8T	90-255 VAC
TSW-160	Single stage	TS-8T	12-24 VAC/VDC
TSW-250	Dual stage	TS-8T	90-255 VAC
TSW-260	Dual stage	TS-8T	12-24 VAC/VDC
TSW-150-NP	Single stage	None	90-255 VAC
TSW-160-NP	Single stage	None	12-24 VAC/VDC
TSW-250-NP	Dual stage	None	90-255 VAC 12
TSW-260-NP	Dual stage	None	12-24 VAC/VDC

SPECIFICATIONS

Probe Range: PTC: -58 to 302°F (-50 to 150°C); NTC: -58 to 230°F (-50 to 110°C).
Input: PTC (1000 Ω @ 25°C); NTC (10 kΩ @ 25°C).
Output: R1 SPDT relay resistive load: 20 A @ 240 VAC; R2 SPDT relay resistive load: 8 A @ 240 VAC; Inductive load: 3 A @ 240 VAC.
Horsepower Rating: R1 2HP @ 240 VAC.
Control Type: On/off.
Power Requirements: 90-255 VAC or 12-24 VAC/VDC (±10%) depending on model.
Power Consumption: 3.6 VA.
Accuracy: ±1% FS.
Display: 3 digits plus sign.
Resolution: Single stage: 1°; Dual stage: 0.1° < 100; 1° ≥ 100°.
Memory Backup: Non-volatile memory.
Ambient Temperature: 32 to 104°F (0 to 40°C).
Weight: 1.2 lb (544 g).
Enclosure Rating: NEMA 4X (IP66).
Agency Approvals: CE, cURus.

ACCESSORIES

Model	Description
CC1-GY	Temperature sensor clip, grey
CC1-N	Temperature sensor clip, neutral

SERIES TSWB

DIGITAL TEMPERATURE/WATER LEVEL SWITCH

Two Temperature Set Points, Low Water Level Alarm

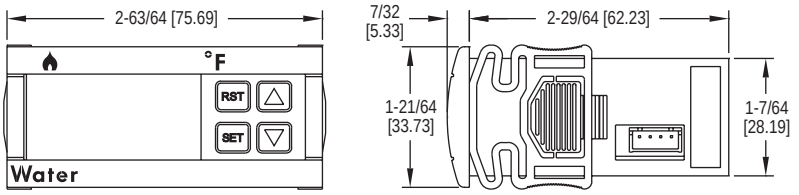

The **Series TSWB Digital Temperature/Water Level Switch** offers complete boiler control for outdoor wood boilers and other similar heating equipment.

BENEFITS/FEATURES
- 3 outputs for high temp, low temp or input alarm
- Conductivity probe input for water level monitoring
- Configuration key

APPLICATIONS
- Wood or pellet boilers

MODEL CHART

Model	Supply Power	Unit
TSWB-010	115 VAC	°F
TSWB-011	115 VAC	°C

ACCESSORIES

See page reference ❶ below.

SPECIFICATIONS

Probe Range: PTC: -58 to 302°F (-50 to 150°C); NTC: -58 to 230°F (-50 to 110°C).
Probe Temperature Input: PTC (1000Ω @ 25°C); NTC (10KΩ @ 25°C).
Probe Level Input: Conductivity probe: Max voltage 12 VAC. Sensitivity established from factory at 100KΩ.
Output: R1 SPST NO relay resistive load 5 A @ 250 VAC; R2 SPST NC relay resistive load 5 A @ 250 VAC; R3 SPDT relay resistive load 16 A @ 240 VAC.
Horsepower Rating: 1HP -- 10FLA, 60LRA 250 VAC.
Control Type: On/off.
Power Requirements: 115 VAC ± 10%, 230 VAC ± 10%, 24 VAC/DC ± 10%, 12 VAC/DC ± 10%.
Power Consumption: 4VA (230V/115V), 1.5VA (24V/12V).
Accuracy: > 1% of FS.
Display: 3-digit, red 1/2″ digits.
Resolution: 1° (3 digits).
Memory Backup: Nonvolatile memory.
Ambient Operating Temperature: 32 to 158°F (-30 to 70°C).
Storage Temperature: -4 to 176°F (-30 to 80°C).
Weight: 3.5 oz.
Front Protection: IP64.
Agency Approvals: CE, cURus.

❶**Digital Temperature Switch Probes and Accessories: See page 129 (Series TS-Probes)**

Dwyer

SERIES TS-PROBES

DIGITAL TEMPERATURE SWITCH PROBES AND ACCESSORIES

Probes to be used with TS, TS2, TSS2, TSWB, TSW, TS3, TSX3, and 40M

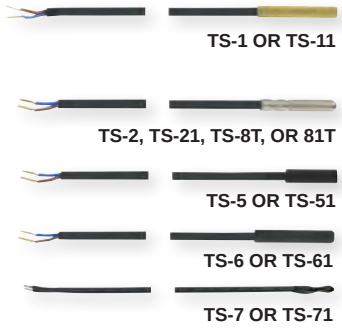

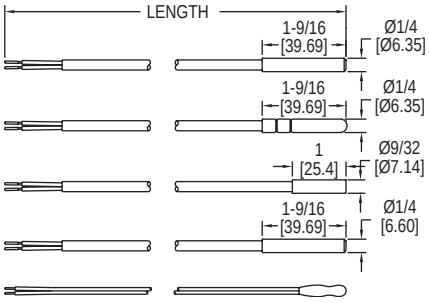

A-TS-AP

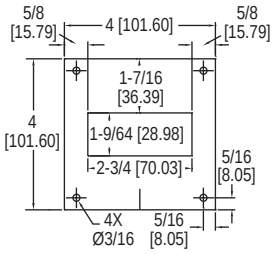

TS-W

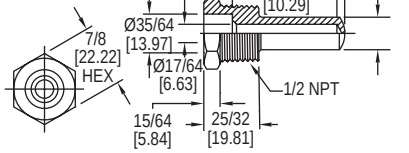

TS2-K

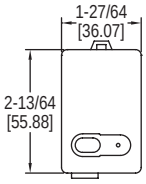

BENEFITS/FEATURES
- 5 or 10 foot cable lengths
- PTC or NTC temperature curves

APPLICATIONS
- Refrigerated cabinets
- Walk in coolers
- Food service equipment
- Medical sterilizers or equipment
- Wood or pellet boilers
- Brewing systems

SPECIFICATIONS

Sensor: See model chart.
Operating Temperature: PTC or NTC: -58 to 221°F (-50 to 105°C); J-type: 32 to 1400°F (0 to 760°C); K-type: 32 to 2300°F (0 to 1200°C).
Cable: PTC and NTC models: PVC; J-type and K-type models: FEP.

MODEL CHART - SENSORS

Model	Sensor	Cap Material	Length ft (m)	Model	Sensor	Cap Material	Length ft (m)
TS-1	PTC	Brass	5 (1.5)	**TS-7**	NTC	None	5 (1.5)
TS-11	PTC	Brass	10 (3)	**TS-71**	NTC	None	10 (3)
TS-2	PTC	SS	5 (1.5)	**TS-8T**	NTC	SS	5 (1.5)
TS-21	PTC	SS	10 (3)	**TS-81T**	NTC	SS	10 (3)
TS-5	PTC	PVC	5 (1.5)	**TS-88T**	NTC	SS	15 (4.5)
TS-51	PTC	PVC	10 (3)	**TCS-J**	J-type	SS	4 (1.21)
TS-6	PTC	Polyamide resin coated brass	5 (1.5)	**TCS-K**	K-type	SS	4 (1.21)
TS-61	PTC	Polyamide resin coated brass	10 (3)				

ACCESSORIES

Model	Description
A-TS-AP	1/4 DIN adaptor plate
TS-W	Brass thermowell (for use with TS-1, TS-11, TS-2, TS-21)
TS2-K	Configuration key

SERIES DFS2

LOW LIMIT FREEZE PROTECTION SWITCH

Manual and Automatic Reset

Manual reset option shown

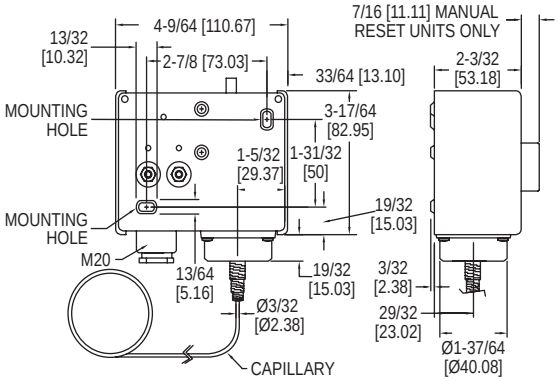

The **Series DFS2 Low Limit Freeze Protection Switch** protects cooling coils in air handler systems by preventing frost build up. The thermostat and its capillary sensing element provide an antifreeze function by sensing the lowest temperature along any one foot section of capillary. The DPDT manual or automatic reset relays signal the building management system as well as cut off the fan. The Series DFS2 will detect temperature drops below the fixed safety value (set point) which can be set as low as 34°F (1°C) utilizing the visual set point indicator and set point screw.

BENEFITS/FEATURES
- Vapor-filled copper capillary sensing element
- Joint spring protector at capillary-bellow connection
- Set point safety-lock protection and simple adjustment
- Easy installation and wiring
- Automatic and manual reset

APPLICATIONS
- HVAC equipment
- Heat exchangers and cooling coils

MODEL CHART

Model	Reset Action	Capillary Length
DFS2-DA10	Automatic	10´ (302 cm)
DFS2-DA20	Automatic	20´ (609 cm)
DFS2-DM10	Manual	10´ (302 cm)
DFS2-DM20	Manual	20´ (609 cm)

SPECIFICATIONS

Sensing Element: Vapor-filled capillary.
Operating Temperature: 14°F to 54°F (-10°C to 12°C).
Storage Temperature: 14°F to 158°F (-10°C to 70°C).
Capillary Overload Temperature: 392°F (200°C), maximum 60 minutes.
Humidity Limit: 0 to 95% RH, non-condensing.
Enclosure: Galvanized steel base, ABS cover.
Enclosure Rating: NEMA 1 (IP40).
Capillary Material: Copper.
Cable Entry: (1) M20 compression fitting.
Reset Action: Available in automatic or manual reset options.
Low-level Setpoint: Factory Set: 39°F (4°C), and safety lock secured; Adjustment via screwdriver slot.
Wire Connection: Terminal with wire-retaining screws.
Wire Size: Max. 14 AWG.
Electrical Rating: 24-250 VAC, 15 (8) A.
Electrical Connections: Two each NO/NC/Common.
Deadband: 1.8°F (fixed).
Weight: 1.6 lb (0.7 kg).
Agency Approvals: CE.

ACCESSORIES

Model	Description
A-DFS2-C	Capillary mounting clips (6 pieces)

Dwyer

MODEL 862E

EXPLOSION-PROOF / HEAVY-DUTY THERMOSTAT

Line or Low Voltage, Heating or Cooling

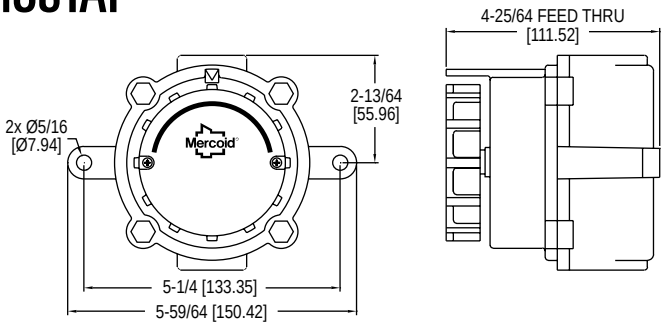

The **Model 862E Explosion-Proof / Heavy-Duty Thermostat** is designed for hazardous-location temperature control of heating, cooling, or ventilation systems and features an adjustable set point knob for easy and convenient set point adjustment.

BENEFITS/FEATURES
- Explosion-proof construction
- Lightweight and durable

APPLICATIONS
- Oil rigs or refineries
- Petrochemical plants
- Grain processing and storage facilities
- HVAC control

MODEL CHART

Model	Description
862E	Explosion-proof, heavy-duty thermostat

SPECIFICATIONS

Service: Compatible gases.
Temperature Limit: -49 to 176°F (-45 to 80°C).
Enclosure Rating: Explosion-proof NEMA 7 & 9, Class I, Divisions 1 and 2, Groups C and D; Class II, Division 1, Groups E, F and G; Class II, Division 2, Groups F and G; Class III; Class I, Zones 1 and 2, Groups IIA & IIB.
Switch Type: SPDT snap action switch.
Electrical Rating: 22 A @ 480 VAC (res.), 1/2 HP @ 125 VAC, 1 HP @ 250 VAC.
Electrical Connection: Screw terminal.
Conduit Connection: 3/4″ female NPT.
Set Point Adjustment: External knob.
Adjustable Range: 36 to 82°F (2 to 28°C).
Deadband: 2.5°F (1.5°C).
Weight: 2.1 lb (0.95 kg).
Compliance: CSA, UL.

USA: California Proposition 65
WARNING: This product can expose you to chemicals including Lead, which is known to the State of California to cause cancer and birth defects or other reproductive harm. For more information go to www.P65Warnings.ca.gov.

SERIES DA-7035N

TEMPERATURE SWITCH

Bulb and Capillary, Inert Gas Fill

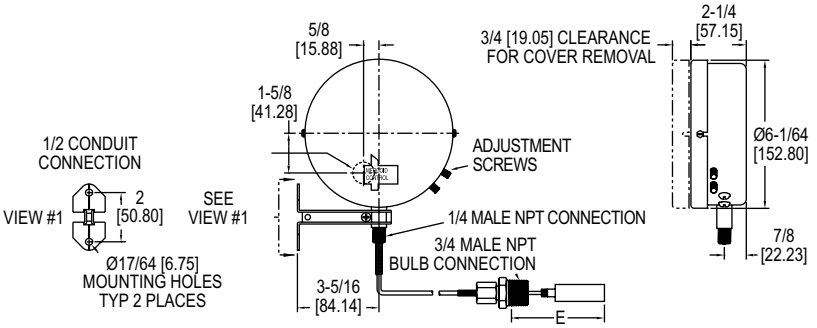

The **Series DA-7035N Temperature Switch** includes the same time-proven switching mechanism used in our Series DA pressure switches. Bourdon tube ensures high sensitivity and long life.

BENEFITS/FEATURES
- Adjustable deadband
- No cross ambient temperature effects
- Visible dial calibrated in both °F and °C
- Visible on/off indication

APPLICATIONS
- Mechanical process temperature monitoring

SPECIFICATIONS

Service: Compatible liquids or gases.
Wetted Materials: Bulb and connection: 304 SS.
Temperature Limit: Process: See model chart; Ambient: 180°F (82°C).
Pressure Limit: 300 psi (20.6 bar).
Enclosure Rating: General purpose. Optional weatherproof and explosion-proof.
Repeatability: ±1% FS.
Switch Type: SPDT snap switch. Optional DPDT snap and a variety of mercury switches.
Electrical Rating: 10 A @ 120/240/480 VAC.
Electrical Connections: Screw terminal.
Conduit Connection: 7/8″ (22.23 mm) hole for 1/2″ (12.7 mm) conduit hub.
Process Connection: 3/4″ male NPT. Other sizes available.
Set Point Adjustment: External knobs for set point and reset point.
Deadband: Adjustable from minimum in model chart to full range. Optional low fixed deadband.
Capillary: 6′ (1.8 m) standard. Ranges 1N to 7N, and 10N: copper. Ranges 8N, 9N, 11N: 304 SS.
Set Point Scale: Indication in °F and °C.
Options: See web page for additional option models such as: switch type enclosures, fixed deadband, longer or shorter capillary, armored capillary, wells, two stage, 1/2″ or 1″ connection sizes, manual reset.
Weight: 5 lb (2.3 kg).

MODEL CHART

Model	Range °F (°C)	Max. Temp. °F (°C)	Min. Deadband °F (°C)	Min. Insertion Depth "E" in. (mm)
DA-7035-153-1N	-60 to +30 (-50 to 0)	150 (65)	23 (13)	2-7/8 (73)
DA-7035-153-3N	0 to 100 (-18 to 40)	240 (115)	25 (14)	2-7/8 (73)
DA-7035-153-4N	50 to 150 (10 to 65)	250 (120)	25 (14)	2-7/8 (73)
DA-7035-153-5N	100 to 200 (40 to 95)	300 (150)	25 (14)	2-7/8 (73)
DA-7035-153-7N	140 to 300 (60 to 150)	500 (260)	41 (23)	2-7/8 (73)
DA-7035-153-8N	250 to 415 (120 to 215)	550 (290)	42 (23)	2-7/8 (73)
DA-7035-153-9N	350 to 550 (175 to 290)	600 (315)	50 (28)	4-7/8 (124)
DA-7035-153-10N	100 to 300 (40 to 150)	500 (260)	50 (28)	2-7/8 (73)
DA-7035-153-11N	100 to 500 (40 to 260)	600 (315)	100 (56)	2-7/8 (73)

Note: Insertion depth can be increased through use of bulb supports or wells. Consult factory.

Dwyer

SERIES BTT-E/N

TEMPERATURE TRANSMITTER

Wall Mount for Building Applications

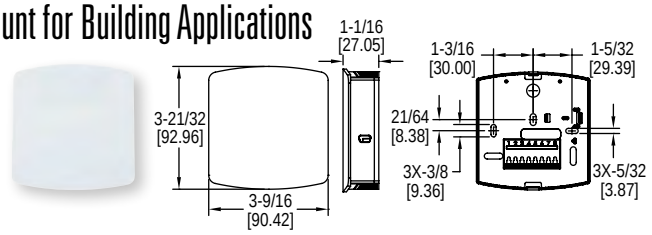

European style

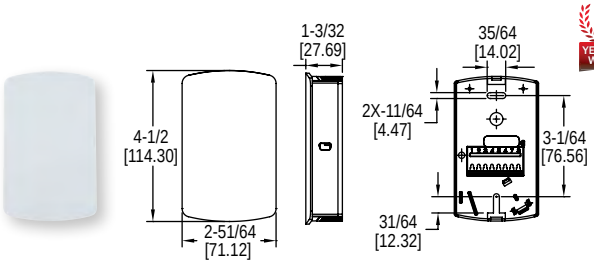

North American style

The **Series BTT-E/N Temperature Transmitters** offer transmitter output signals with the same form and fit as our popular Series TE-E/N thermistor and RTD sensors for Building Automation and HVAC installations.

BENEFITS/FEATURES
- Transmitter signal offers reliable accuracy for installations with long wire runs between the transmitter and the receiver/controller

APPLICATIONS
- Room or indoor building space temperature monitoring

MODEL CHART

Model	Housing	Output
BTT-N00-3	North American style	4-20 mA
BTT-N00-4	North American style	0-10 VDC
BTT-E00-3	European style	4-20 mA
BTT-E00-4	European style	0-10 VDC

SPECIFICATIONS

Temperature Sensor: Pt 1000 Ω RTD DIN Class A 0.00385 Ω/°C.
Range: 32 to 122 °F (0 to 50 °C).
Temperature Limits: 32 to 122 °F (0 to 50 °C).
Accuracy: ±0.5 °C @ 25 °C.
Thermal Effect: ±0.01%/°C.
Response Time: 100 ms.
Power Requirements: 13-36 VDC for current models, 13-36 VDC or 16-28 VAC for voltage models.
Output Signal: 4-20 mA or 0-10 VDC (depending on model).
Electrical Connections: Screw terminal block.
Enclosure Rating: IP20.
Weight: 2.6 oz (73.7 g).
Compliance: CE.

SERIES BTT

TEMPERATURE TRANSMITTERS

Current or Voltage Output, NEMA 4X Enclosures

CALIBRATION SERVICES AVAILABLE

Duct mount

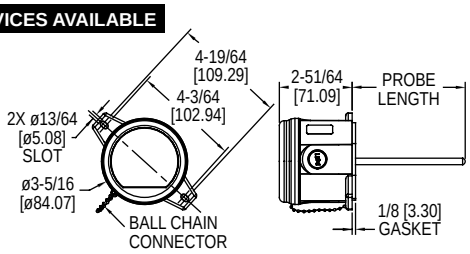

Immersion mount

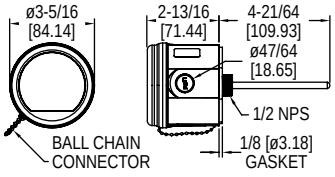

Outside air without radiation shield

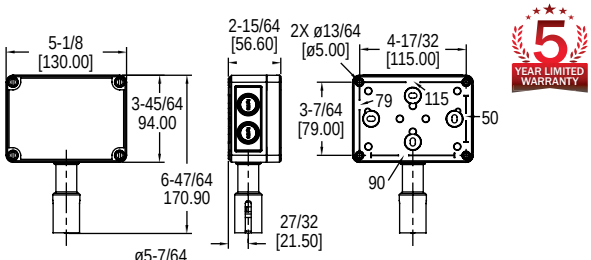

Outside air with radiation shield

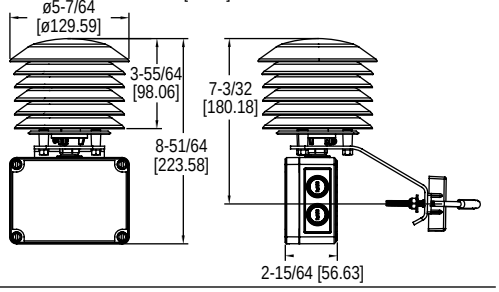

The **Series BTT Temperature Transmitters** offer transmitter output signals with the same form and fit as our popular TE thermistor and RTD sensors for building HVAC applications. Thermowells are required when using immersion models in liquid applications.

BENEFITS/FEATURES
- Duct, immersion, and outside air models available
- Radiation shield available for mounting in direct sunlight
- Transmitter output allows for longer wire runs than standard thermistor sensors

APPLICATIONS
- Building automation system temperature monitoring

MODEL CHART

Example	BTT	-D	04	-1		BTT-D04-1
Series	BTT					Temperature transmitter
Mounting Configuration		D I O R				Duct mount Immersion mount Outside air Outside air with radiation shield
Probe Length*			25 04 06 08 12 18			2.5″ (required for “O” and “R” models) 4″ 6″ 8″ 12″ 18″
Output				1 2		4-20 mA 0-10 V
Options					Blank FC NIST	None Factory calibration certificate NIST calibration certificate

*For BTT-I models, actual probe length is approximately 0.75″ longer than listed probe length to ensure maximum immersion into thermowells.

SPECIFICATIONS

Temperature Sensor: Pt1000 RTD.
Range: -40 to 140°F (-40 to 60°C).
Temperature Limits: Operating: -40 to 302°F (-40 to 150°C).
Accuracy: ±0.5°C @ 25°C.
Thermal Effect: ±0.01%/°C.
Response Time: 100 ms.
Wetted Materials: All models: 304 SS (probe), polycarbonate (housing); Duct and immersion models: Neoprene (gasket); Outside air models: Nylon (insert), silocone (O-ring).
Process Connection: 1/2″ NPS (immersion models only).
Electrical Connection: Removable terminal block, knocks out for conduit fitting.
Conduit Connection: 1/2″ NPT.
Probe Lengths: 2.5 to 18″ (depending on configuration).
Power Requirements: 13-36 VDC for current models, 13-36 VDC or 16-28 VAC for voltage models.
Output Signal: 4-20 mA or 0-10 VDC (depending on model).
Enclosure Rating: NEMA 4X (IP66) (immersions models require thermowell).
Weight: 5.11 oz (145 g) (duct/immersion); 8.4 oz (238 g) (OSA without radiation shield); 1 lb 7.4 oz (663.4 g) (OSA with radiation shield).
Compliance: CE.

THERMOWELLS - WELDED

Model	Material	Connection (Internal/External)	Insertion Length
TE-TNS-N253N-00	304 SS	1/2″ NPSM/1/2″ NPT	2.5″
TE-TNS-N043N-00	304 SS	1/2″ NPSM/1/2″ NPT	4″
TE-TNS-N063N-00	304 SS	1/2″ NPSM/1/2″ NPT	6″
TE-TNS-N083N-00	304 SS	1/2″ NPSM/1/2″ NPT	8″
TE-TNS-N123N-00	304 SS	1/2″ NPSM/1/2″ NPT	12″
TE-TNS-N183N-00	304 SS	1/2″ NPSM/1/2″ NPT	18″

Dwyer

SERIES TTW

WEATHERPROOF IMMERSION TEMPERATURE TRANSMITTER

Pt100 RTD, PC Programmable Transmitter

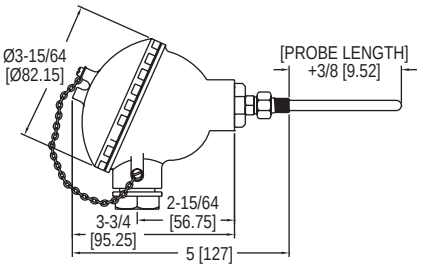

The **Series TTW Weatherproof Immersion Temperature Transmitter** offers a field adjustable temperature transmitter pre-assembled with an RTD sensor and weatherproof enclosure.

BENEFITS/FEATURES
- Easy output scale adjustment via the USB port
- Long product life cycle with the rugged aluminum IP66 housing
- No setup for most installations with the output range preset to 32 to 212°F

APPLICATIONS
- Immersion temperature sensing in HVAC systems

MODEL CHART	
Model	**Probe Length**
TTW-104	4″
TTW-106	6″
TTW-108	8″
TTW-112	12″
TTW-118	18″

THERMOWELLS - MACHINED❶			
Model	**Material**	**Length**	**Connection (Internal/External) (NPT)**
TE-TNS-N044N-14	304 SS	4″	1/4″ / 1/2″
TE-TNS-N064N-14	304 SS	6″	1/4″ / 1/2″
TE-TNS-N094N-14	304 SS	9″	1/4″ / 1/2″
TE-TNS-N124N-14	304 SS	12″	1/4″ / 1/2″

SPECIFICATIONS

TEMPERATURE SENSOR
Accuracy: ±3°F (±1.7°C).
Temperature Limits: Operating: -40 to 302°F (-40 to 150°C).
Sensor Curves: Pt100 RTD (TE Series curve D).

TEMPERATURE TRANSMITTER
Input Range: -328 to 986°F (-200 to 530°C).
Output: 2-wire 4-20 mA.
Output Impedance: 600 Ω @ 24 VDC.
Power Requirements: 12-35 VDC.
Accuracy: ±0.2% FS.
Temperature Limits: -40 to 185°F (-40 to 85°C).
Response Time: <100 ms.

ENCLOSURE
Temperature Limits: -40 to 212°F (-40 to 100°C).
Rating: NEMA 4X (IP66).
Material: Painted aluminum housing.

FREE software download: See page 132 (Series TBU-00).

Machined thermowell

❶Technical Specifications and Additional Thermowell Models: See page 136 (Series TE-TNS)

MODEL TBU-00

TEMPERATURE TRANSMITTER

Field Selectable, Universal Input, In-Head Mounting

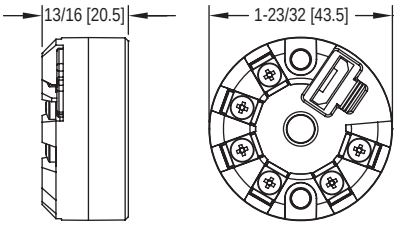

The **Model TBU-00 Temperature Transmitter** is a high precision temperature transmitter designed to easily mount in most temperature sensor instrument enclosures. The universal input reduces inventory while the micro-USB port facilitates easy configuration, and calibration in the lab or in the field. The versatile TBU model allows for selection and configuration of input type, measurement range, and calibration. The output can be set as either direct 4-20 mA, or reverse 20-4 mA, through easy to use configuration software.

BENEFITS/FEATURES
- Configurable measurement range
- Standard temperature sensor head enclosure mounting
- Pt100 connection for 2, 3, or 4 wires

APPLICATIONS
- Process applications where a 4-20 mA signal is required
- Food processing equipment
- Boiler equipment
- Refrigeration equipment

MODEL CHART	
Model	**Description**
TBU-00*	Universal input temperature transmitter with customizable measurement ranges
*TBU-00 FREE downloadable configuration software available at www.dwyer-inst.com.	

SPECIFICATIONS
Input: Thermocouples J, K, R, S, T, N, E, and B; 2, 3, or 4-wire Pt100 RTD, 2 or 3-wire Pt1000 RTD, 2-wire NTC thermistor, or 0-50 mV voltage.
Output: Linearized 4-20 mA, 2-wire or 20-4 mA loop powered.
Transmitter Type: 2, 3, or 4-wire.
Temperature Limits: -40°F to 185°F (-40 to 85°C).
Power Requirements: 10-35 VDC.
Accuracy: See chart below.
Temperature Drift: < ±0.16% / 25°C.
Response Time: 1.6 s, typical.
Weight: 1.4 oz (40 g).
Agency Approvals: CE.

Note: Factory set to Pt100 Ω RTD, 0 to 100°C, direct acting.

ACCESSORIES	
Model	**Description**
A-709	NEMA 4X aluminum transmitter enclosure
UHH-CBL2	USB to micro-USB cable

ACCURACY CHART		
Input Type	**Temperature Range**	**Accuracy (Typical)**
Thermocouples and mV	Configured with software	±0.1% FS
Pt100/ Pt1000 RTDs	-328 to 1202°F (-200 to 650°C)	±0.13% FS
	-238 to 752°F (-150 to 400°C)	±0.1% FS

Dwyer
SERIES TTE

EXPLOSION-PROOF RTD TEMPERATURE TRANSMITTER

User Selectable Ranges, Optional LCD Display

Shown with optional LCD display

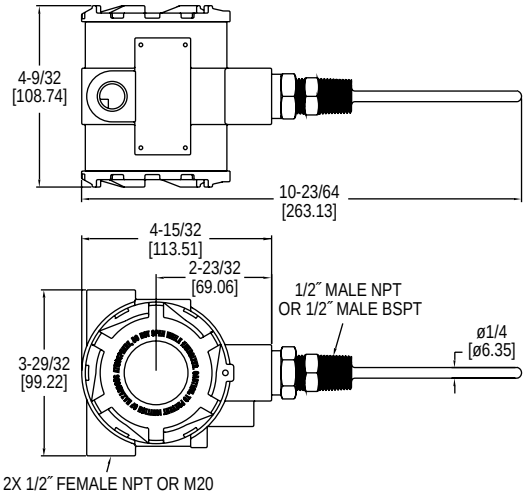

The **Series TTE Explosion-Proof RTD Temperature Transmitter** is the ideal product for hazardous temperature measurement applications. The TTE series has seven pre-programmed temperature ranges that are selectable via an internal dip switch. For those applications that need a custom range, the transmitter can be easily configured for any range between -30 to 250°F with a minimum span of 40°F. The span and zero can be quickly adjusted with a simple push button design. The compact housing allows for the transmitter to be mounted in virtually any application.

BENEFITS/FEATURES

- FM approved for Class I, Groups B, C, D; Class II, Groups E, F, G classified explosive environments
- Optional LCD
- Output span selected from seven common ranges or user determined

APPLICATIONS

- Explosive process environments
- Offshore HVAC monitoring

MODEL CHART

Example	TTE	-1	04	-W	-LCD	TTE-104-W-LCD
Series	TTE					Explosion-proof RTD temperature transmitter
Compliance		1 2				FM* ATEX/IECEx/UKCA Ex flameproof
Probe Length			02 04 06 09 12 15 18			2″ probe 4″ probe 6″ probe 9″ probe 12″ probe 15″ probe 18″ probe
Construction				W		Well probe
Options					Blank BSPT C5 LCD M20	No LCD display 1/2 male BSPT process connection C5-M housing paint specification LCD display Female M20 thread electrical connection

*Options that do not have ATEX, IECEx, UKCA Ex.

Attention: Units without the "2" suffix following "TTE" are not directive 2014/34/EU (ATEX) Complaint. These units are not intended for use in potentially hazardous atmospheres in the EU. These units may be CE marked for other directives of the EU.

ACCESSORIES

Model	Description
A-287	Mounting bracket for pipe or surface mounting (Includes bracket and two 2″ U-bolts)

THERMOWELLS - MACHINED❶

Model	Material	Length	Connection (Internal/External) (NPT)
TE-TNS-N044N-12	304 SS	4″	1/2″ / 3/4″
TE-TNS-N064N-12	304 SS	6″	1/2″ / 3/4″
TE-TNS-N094N-12	304 SS	9″	1/2″ / 3/4″
TE-TNS-N124N-12	304 SS	12″	1/2″ / 3/4″

Machined thermowell

SPECIFICATIONS

Temperature Sensor: Pt1000, 0.00385 DIN.
Output Temperature Ranges: User selectable – any range between -30 to 250°F with a minimum span of 40°F.
Temperature Limits: Ambient: -4 to 158°F (-20 to 70°C); Process: -30 to 250°F (-34.4 to 120°C).
Accuracy: Transmitter ±0.1% FS; Probe ±0.3% FS.
Thermal Drift Effects: ±0.02%/°C max.
Response Time: 250 ms.
Wetted Materials: 316 SS.
Process Connection: 1/2″ male NPT or 1/2″ male BSPT.
Conduit Connection: 1/2″ female NPT or M20.
Probe Length: 2″ to 18″ (depending on model).
Pressure Limits: 2000 psi (137.9 bar).
Power Requirements: 10-35 VDC.
Output Signal: 4-20 mA (2-wire loop powered).
Optional Display: 2 lines X 8 character LCD.
Enclosure Rating: Weatherproof NEMA 4X (IP66) and Explosion-proof. Listed with FM for Class I, Division 1, Groups B, C and D, and dust-ignitionproof for Class II, Division 1, Groups E, F and G and Class III atmospheres.
ATEX Certified: CE 2813 Ex II 2 G Ex db IIC T6...T4 Gb, CE Ex 2813 II 1 D Ex ta IIIC T111°C Da, T6 Process Temp ≤80°C, Temperature Class T5 Process Temp ≤95°C, Temperature Class T4 Process Temp ≤120°C as defined on nameplate. EU-type Cerificate No.: EMT17ATEX0021 X.
ATEX Standards: EN IEC 60079-0, EN 60079-1, EN 60079-31.
IECEx Certified: For Ex db IIC T6...T4 Gb, Ex ta IIIC T111°C Da, T6 Process Temp ≤80°C, Temperature Class T5 Process Temp ≤95°C, Temperature Class T4 Process Temp ≤120°C as defined on nameplate.
IECEx Certificate of Conformity: Element IECEx EMT 17.0007X; IECEx Standards: IEC 60079-0, IEC 60079-1, IEC 60079-31.
UKCA Ex Certified for: UKCA 0518 Ex II 2 G Ex db IIC T6...T4 Gb / II 1 D Ex ta IIIC T111°C Da, T6 process temp ≤ 80°C, T5 process temp ≤ 95°C, T4 process temp ≤ 120°C. UKCA Ex Certificate of Conformity: EMA22UKEX0066X. UKCA Ex Standards: EN IEC 60079-0, EN 60079-1, EN 60079-31.
Weight: 2 lb 8 oz (1134 g).
Compliance: ATEX, CE, FM, IECEx, UKCA Ex.

Note: References to ATEX apply to UKCA Ex.

FIELD-SELECTABLE RANGES

40 to 90°F (4.4 to 32.2°C)
-20 to 140°F (-28.9 to 60°C)
0 to 100°F (-17.8 to 37.8°C)
30 to 240°F (-1.1 to 115.6°C)
32 to 212°F (0 to 100°C)
32 to 122°F (0 to 50°C)
-30 to 65°C (-1.1 to 18.3°C)
Custom range between -30 to 250°F (-34.4 to 121.1°C)

❶Technical Specifications and Additional Thermowell Models: See page 136 (Series TE-TNS)

Dwyer

SERIES TE-E/N

WALL MOUNT TEMPERATURE SENSORS

Discrete Wall Mount Housing

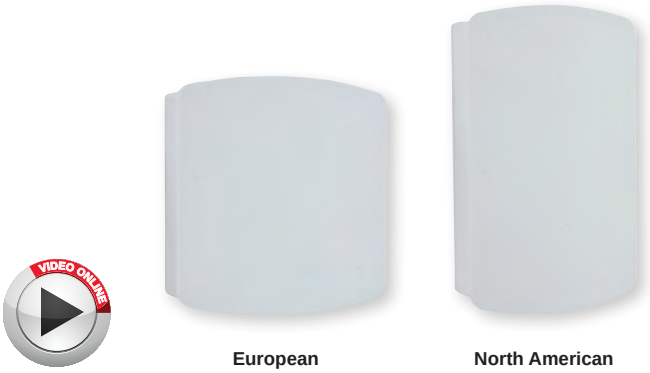

European North American

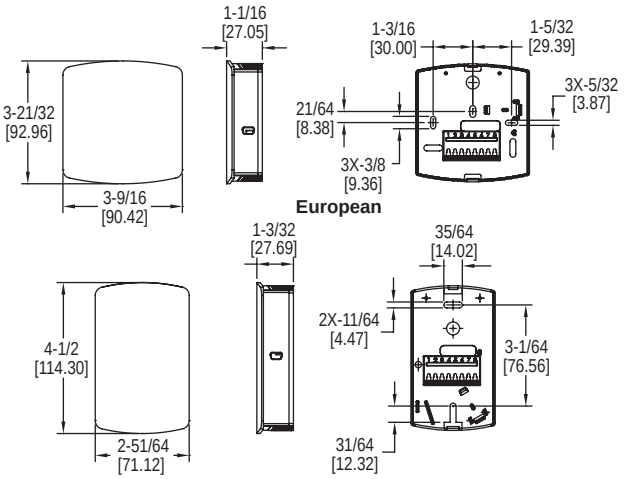

The **Series TE-E/N Wall Mount Temperature Sensors** provide a low cost temperature input for any building management system.

BENEFITS/FEATURES
- North American or European housing aesthetic options
- Uniform look matches other Dwyer wall mount devices
- Universal mounting plate meets various installation requirements

APPLICATIONS
- Building automation
- Room temperature monitoring

SPECIFICATIONS

Accuracy: Thermistor temp sensor: ±0.22°C @ 25°C (±0.4°F @ 77°F); RTD temp sensor: DIN class B; ±0.3°C @ 0°C (±54°F @ 32°F).
Temperature Limits: -40 to 140°F (-40 to 60°C).
Housing Material: ABS plastic.
Weight: 0.3 lb (136 g).

MODEL CHART

North American Model	Sensor Type	European Model	Sensor Type
TE-NND-A	10k Ω type III thermistor	**TE-END-A**	10k Ω type III thermistor
TE-NND-B	10k Ω type II thermistor	**TE-END-B**	10k Ω type II thermistor
TE-NND-C	3k Ω thermistor	**TE-END-C**	3k Ω thermistor
TE-NND-D	Pt100 Ω RTD	**TE-END-D**	Pt100 Ω RTD
TE-NND-E	Pt1000 Ω RTD	**TE-END-E**	Pt1000 Ω RTD
TE-NND-F	20k Ω thermistor	**TE-END-F**	20k Ω thermistor
TE-NND-Q	10k Ω type III with 11 k Ω shunt		

SERIES TE-WSS

STAINLESS STEEL WALL PLATE TEMPERATURE SENSOR

Screw Terminal Connection, Suitable for Wash Down Applications

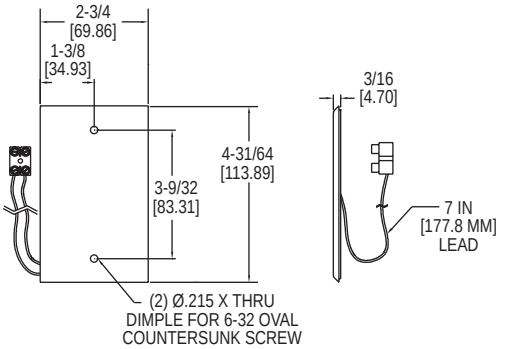

The **Series TE-WSS Stainless Steel Wall Plate Temperature Sensor** measures the ambient air temperature in classrooms and industrial environments.

BENEFITS/FEATURES
- SS flush plate design
- Standard single gang junction box cover plate mounting

APPLICATIONS
- Building automation
- Room temperature monitoring
- Wash down environments

SPECIFICATIONS

Accuracy: Thermistor: ±0.22°C @ 25°C (±0.4°F @ 77°F); RTD: DIN Class B ±0.3°C @ 0°C.
Temperature Limits: Operating -40 to 140°F (-40 to 60°C).
Sensor Curves: See page reference ❶ below.
Housing Material: 304 SS wall plate.
Weight: 2.3 oz (65 g).

MODEL CHART

Model	Sensor Type
TE-WSS-A	10k Ω type III thermistor
TE-WSS-B	10k Ω type II thermistor
TE-WSS-C	3k Ω thermistor
TE-WSS-D	PT100 Ω RTD
TE-WSS-E	PT1000 Ω RTD
TE-WSS-F	20k Ω thermistor

❶**Resistance vs. Temperature Table: See page 137 (Series TE-OND/RND/OSA)**

DUCT AND IMMERSION BUILDING AUTOMATION TEMPERATURE SENSORS

Available up to 18″ Probe Length, Thermistor or RTD Outputs

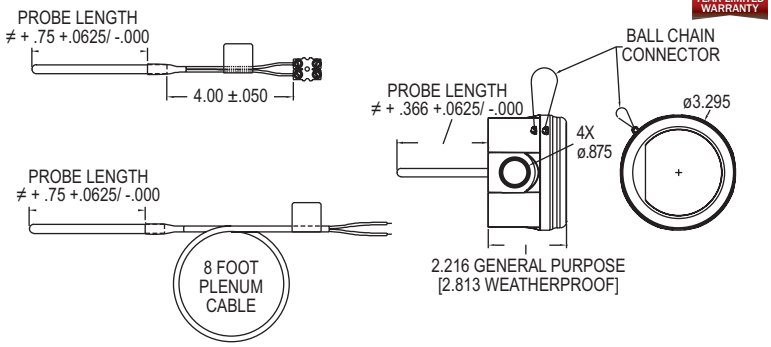

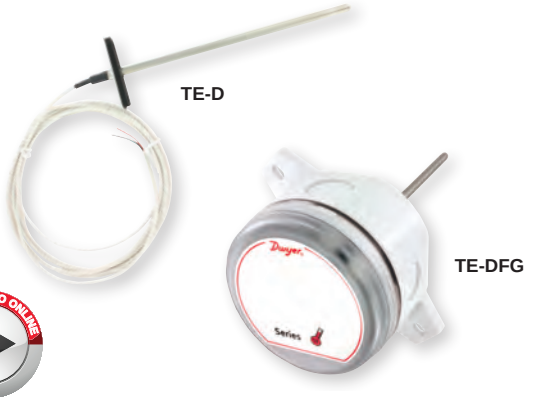

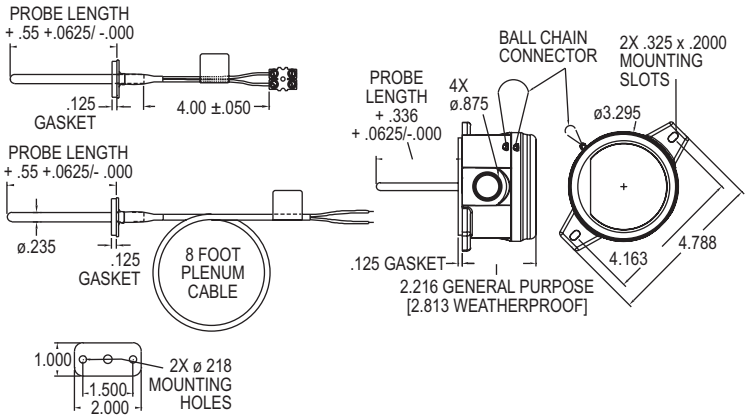

The **Series TE Duct and Immersion Building Automation Temperature Sensors** can be used to monitor air or water temperature throughout a building management system or an air handler unit. Duct or immersion options available with or without an enclosure.

BENEFITS/FEATURES

- Easy to mount external tab housing and flange options for duct applications
- 1/4 turn housing cover with chain to prevent dropping
- Multiple conduit knockouts for easy installation positioning
- 8′ plenum rated cable option
- Terminal connector eliminates need for wire nuts

APPLICATIONS

- Building automation
- VAV temperature sensing
- Chiller or boiler loops
- AHU monitoring

SPECIFICATIONS

Accuracy: Thermistor temperature sensor: ±0.22°C @ 25°C (±0.4°F @ 77°F); RTD temperature sensor: DIN class A: ±0.15°C @ 0°C (±0.28°F @ 32°F).
Temperature Limits: Operating: -40 to 302°F (-40 to 150°C).
Sensor Curves: See page reference ❶ below.
Cable Rating: Plenum option includes UL listed plenum cable.
Housing Material: Meets UL, 94 V-0 polycarbonate plastic.
Housing Rating: NEMA 4X (IP66) (DFW, IBW only).
Weight: 5.3 oz (150.3 g).
Agency Approvals: Meets the technical requirements of EU Directive 2011/65/EU (RoHS II).

MODEL CHART

Example	TE	-DFN	-A	04	4	8	-00	TE-DFN-A0448-00
Series	TE							Temperature sensor
Mounting Configuration		DFN DFG DFW IBN IBG IBW						Duct mount probe only Duct mount probe in general purpose housing Duct mount probe in NEMA 4X housing Immersion probe only Immersion probe in general purpose housing Immersion probe in NEMA 4X housing
Sensor Type			A B C D E F Q					10k Ω type III thermistor 10k Ω type II thermistor 3k Ω thermistor Pt100 Ω RTD Pt1000 Ω RTD 20k Ω thermistor 10k Ω type III with 11k Ω shunt
Probe Length				25 04 06 08 12 18				2.5″ 4″ 6″ 8″ 12″ 18″ (DFN/DFG only)
Probe Diameter					4			1/4″ double encapsulated
Termination						3 4 7 8		4″ leads with spade connectors 4″ leads 8′ plenum rated cable with spade connectors 8′ plenum rated cable
Fittings							00 12 14	None (probe only) 1/2″ NPT compression fitting 1/4″ NPT compression fitting

❶Resistance vs. Temperature Table: See page 137 (Series TE-OND/RND/OSA)

Dwyer

SERIES TE-I

IMMERSION TEMPERATURE SENSORS

Integral Mounting Connection, Welded Thermowells

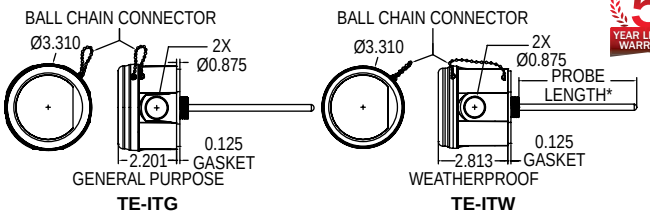

The **Series TE-I Immersion Style Temperature Sensors** accurately measure water temperature inside chilled and hot water loops in HVAC systems. Thermowells are required to protect the electrical connection from the process water and to allow replacement of the sensors without draining the system.

BENEFITS/FEATURES
- Integral 1/2″ NPSM connection for direct mounting to a thermowell
- 1/4 turn housing cover with chain to prevent dropping
- Multiple conduit knockouts for easy installation positioning
- General purpose or weatherproof enclosure options
- Terminal connection eliminates need for wire nuts

APPLICATIONS
- Chiller or boiler loops
- Building automation

SPECIFICATIONS

Accuracy: Thermistor temperature sensor: ±0.22°C @ 25°C (±0.4°F @ 77°F); RTD temperature sensor DIN Class A: ±0.15°C @ 0°C (±0.28°F @ 32°F).
Temperature Limits: Operating: -40 to 302°F (-40 to 150°C).
Sensor Curves: See page reference ❶ below.
Housing Material: Meets UL, 94 V-0 polycarbonate plastic.
Thermowell Material: 304 SS.
Thermowell Connections: Internal = 1/2″ NPSM; External = 1/2″ NPT.
Weight: 5.3 oz (150.3 g).

MODEL CHART

Example	TE	-ITG	-A	25	4	4	-00	TE-ITG-A2544-00
Series	TE							Duct and immersion building automation temperature sensor
Mounting Configuration		ITG ITW						Immersion in general purpose housing Immersion in NEMA 4X housing
Sensor Type			A B C D E F Q					10k Ω type III thermistor 10k Ω type II thermistor 3k Ω thermistor Pt100 Ω RTD Pt1000 Ω RTD 20k Ω thermistor 10k Ω type III with 11k Ω shunt
Probe Length*				25 04 06 08 12 18				2.5″ 4″ 6″ 8″ 12″ 18″
Probe Diameter					4			1/4″ double encapsulated
Termination						4		4″ flying leads terminal block
Fittings							00	None (integral)

*Actual probe length is approximately 0.75″ longer than listed probe length to ensure maximum immersion into thermowells.

❶Resistance vs. Temperature Table: See page 137 (Series TE-OND/RND/OSA)

TE-TNS

THERMOWELLS

Thermowells for Building Automation Temperature Sensors

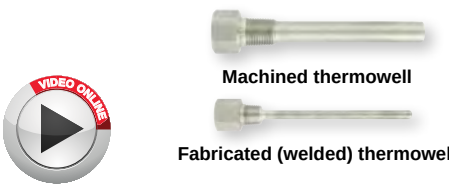

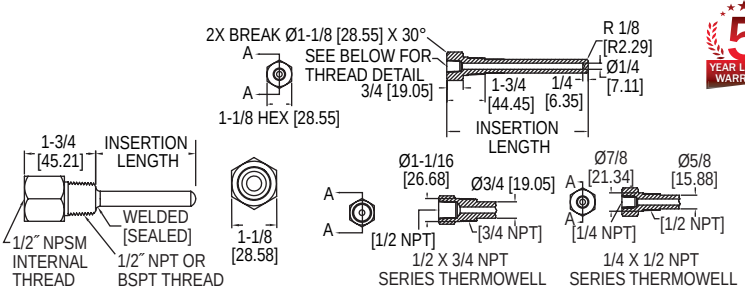

The **Series TE-TNS Stainless Steel Thermowells** are used to separate the instrument from the surrounding media. When used with the Series TE and TE-I Immersion Temperature Sensors, further protection is offered from aggressive media, high pressures, and flow rates while allowing for quick and easy installation of temperature sensors without having to drain process media.
Thermowells are offered in both 304 and 316 stainless steel allowing for superior corrosion resistance. Fabricated, or welded, thermowells are constructed from a tube that is closed at the tip by a welded solid tip. Solid-machined thermowells are manufactured from barstock.

SPECIFICATIONS

Maximum Pressure: Fabricated: 140 psi; Machined: 304 SS: 3700 psi; 316 SS: 5500 psi.
Maximum Temperature: Fabricated: 1000°F (538°C); Machined: 1200°F (648°C).
Construction: Fabricated (welded) or machined model specific.

BENEFITS/FEATURES
- Configurable materials and sizes
- Fabricated (welded) or machined construction
- 1/2″ or 3/4″ NPT process connections

APPLICATIONS
- Building automation
- Chiller or boiler loops
- Chemical industry or process technology

MODEL CHART

Model	Material	Length	Construction	Connection (Internal/External)	Model	Material	Length	Construction	Connection (Internal/External)
TE-TNS-N254N-12	304 SS	2.5″	Machined	1/2″ NPT / 3/4″ NPT	**TE-TNS-N065N-14**	316 SS	6″	Machined	1/4″ NPT / 1/2″ NPT
TE-TNS-N254N-14	304 SS	2.5″	Machined	1/4″ NPT / 1/2″ NPT	**TE-TNS-N065N-12**	316 SS	6″	Machined	1/2″ NPT / 3/4″ NPT
TE-TNS-N044N-14	304 SS	4″	Machined	1/4″ NPT / 1/2″ NPT	**TE-TNS-N095N-14**	316 SS	9″	Machined	1/4″ NPT / 1/2″ NPT
TE-TNS-N044N-12	304 SS	4″	Machined	1/2″ NPT / 3/4″ NPT	**TE-TNS-N095N-12**	316 SS	9″	Machined	1/2″ NPT / 3/4″ NPT
TE-TNS-N064N-14	304 SS	6″	Machined	1/4″ NPT / 1/2″ NPT	**TE-TNS-N125N-14**	316 SS	12″	Machined	1/4″ NPT / 1/2″ NPT
TE-TNS-N064N-12	304 SS	6″	Machined	1/2″ NPT / 3/4″ NPT	**TE-TNS-N125N-12**	316 SS	12″	Machined	1/2″ NPT / 3/4″ NPT
TE-TNS-N094N-14	304 SS	9″	Machined	1/4″ NPT / 1/2″ NPT	**TE-TNS-N253N-00**	304 SS	2.5″	Fabricated	1/2″ NPSM / 1/2″ NPT
TE-TNS-N094N-12	304 SS	9″	Machined	1/2″ NPT / 3/4″ NPT	**TE-TNS-N043N-00**	304 SS	4″	Fabricated	1/2″ NPSM / 1/2″ NPT
TE-TNS-N124N-14	304 SS	12″	Machined	1/4″ NPT / 1/2″ NPT	**TE-TNS-N063N-00**	304 SS	6″	Fabricated	1/2″ NPSM / 1/2″ NPT
TE-TNS-N124N-12	304 SS	12″	Machined	1/2″ NPT / 3/4″ NPT	**TE-TNS-N083N-00**	304 SS	8″	Fabricated	1/2″ NPSM / 1/2″ NPT
TE-TNS-N045N-14	316 SS	4″	Machined	1/4″ NPT / 1/2″ NPT	**TE-TNS-N123N-00**	304 SS	12″	Fabricated	1/2″ NPSM / 1/2″ NPT
TE-TNS-N045N-12	316 SS	4″	Machined	1/2″ NPT / 3/4″ NPT	**TE-TNS-N183N-00**	304 SS	18″	Fabricated	1/2″ NPSM / 1/2″ NPT

Dwyer

SERIES TE-OND/TE-RND/TE-OSA

OUTDOOR TEMPERATURE SENSORS

Protection Against Radiated Heat, Weatherproof Housing

5 YEAR LIMITED WARRANTY

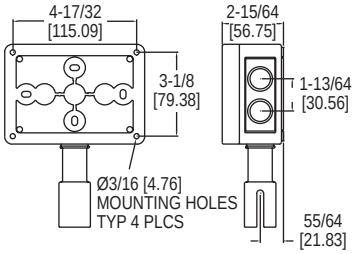

TE-OND

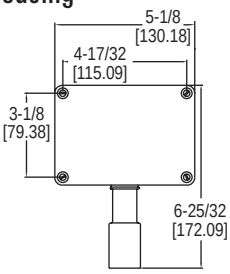

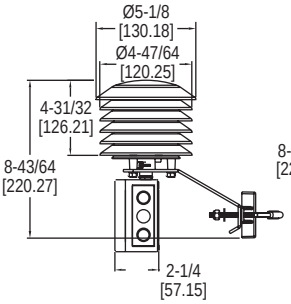

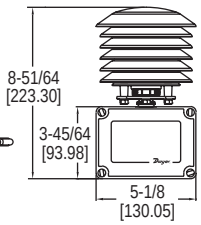

TE-RND

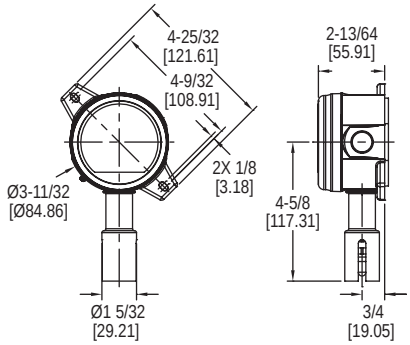

TE-OSA

VIDEO ONLINE

The **Series TE-OND/TE-RND/TE-OSA Outdoor Temperature Sensors** are offered different configurations to increase measurement accuracy by reducing radiated heat effects. For applications where the north side of the building is accessible, the TE-OND/TE-OSA can be used to protect against low levels of radiated heat.

BENEFITS/FEATURES

- Weatherproof for outdoor installation
- Radiation shield available to eliminate heating effects following installation in direct sunlight
- Terminal connector eliminates need for wire nuts

APPLICATIONS

- Building automation
- Outdoor temperature reference

SPECIFICATIONS

Accuracy: Thermistor temperature sensor: ±0.22°C @ 25°C (±0.4°F @ 77°F); RTD temperature sensor: DIN class A: ±0.15°C @ 0°C (±0.28°F @ 32°F).
Temperature Limits: Operating: -40 to 302°F (-40 to 150°C).
Sensor Curves: See Resistance vs. Temperature Table.
Housing Material: Polycarbonate.
Enclosure Rating: TE-OND/TE-RND: NEMA 4X (IP65); TE-OSA: NEMA 3R (IP54).
Weight: 0.65 lb (295 g).

MODEL CHART

Model	Sensor Type
TE-OND-A	10 kΩ type III thermistor
TE-OND-B	10 kΩ type II thermistor
TE-OND-C	3 kΩ thermistor
TE-OND-D	PT100 Ω RTD
TE-OND-E	PT1000 Ω RTD
TE-OND-F	20 kΩ thermistor
TE-OND-Q	10 kΩ type III thermistor with 11 kΩ shunt
TE-RND-A	10 kΩ type III thermistor
TE-RND-B	10 kΩ type II thermistor
TE-RND-C	3 kΩ thermistor
TE-RND-D	PT100 Ω RTD
TE-RND-E	PT1000 Ω RTD
TE-RND-F	20 kΩ thermistor
TE-RND-Q	10 kΩ type III thermistor with 11 kΩ shunt
TE-OSA-A	10 kΩ type III thermistor
TE-OSA-B	10 kΩ type II thermistor
TE-OSA-C	3 kΩ thermistor
TE-OSA-D	PT100 Ω RTD
TE-OSA-E	PT1000 Ω RTD
TE-OSA-F	20 kΩ thermistor
TE-OSA-Q	10 kΩ type III thermistor with 11 kΩ shunt

RESISTANCE VS TEMPERATURE TABLE

Temperature Resistance Curves (Ω)

°C	°F	A - 10k Ω type III thermistor Green/Green	B - 10k Ω type II thermistor Red/Green	C - 3k Ω thermistor Black/Black	D - PT100 Ω RTD Yellow/Yellow	E - PT1000 Ω RTD Red/Red	F- 20k Ω thermistor Green/Blue	Q - 10k Ω type III thermistor with 11k Ω shunt Red/White
-55	-67.0	607800.00	963849.00	289154.70	78.32	783.2	2394000.00	10804
-50	-58.0	441200.00	670166.00	201049.80	80.31	803.1	1646200.00	10732
-45	-49.0	323600.00	471985.00	141595.50	82.29	822.9	1145800.00	10638
-40	-40.0	239700.00	336479.00	100943.70	84.27	842.7	806800.00	10517
-35	-31.0	179200.00	242681.00	72804.30	86.25	862.5	574400.00	10364
-30	-22.0	135200.00	176974.00	53092.20	88.22	882.2	413400.00	10172
-25	-13.0	102900.00	130421.00	39126.30	90.19	901.9	300400.00	9938
-20	-4.0	78910.00	97081.00	29124.30	92.16	921.6	220600.00	9654
-15	5.0	61020.00	72957.00	21887.10	94.12	941.2	163500.00	9320
-10	14.0	47540.00	55329.00	16598.70	96.09	960.9	122280.00	8933
-5	23.0	37310.00	42327.00	12698.10	98.04	980.4	92240.00	8495
0	32.0	29490.00	32650.00	9795.00	100.00	1000.0	70160.00	8012
5	41.0	23460.00	25392.00	7617.60	101.95	1019.5	53780.00	7489
10	50.0	18780.00	19901.00	5970.30	103.90	1039.0	41560.00	6937
15	59.0	15130.00	15712.00	4713.60	105.85	1058.5	32340.00	6369
20	68.0	12260.00	12493.00	3747.90	107.79	1077.9	25360.00	5798
25	77.0	10000.00	10000.00	3000.00	109.74	1097.4	20000.00	5238
30	86.0	8194.00	8057.00	2417.10	111.67	1116.7	15892.00	4696
35	95.0	6752.00	6531.00	1959.30	113.61	1136.1	12704.00	4184
40	104.0	5592.00	5326.00	1597.80	115.54	1155.4	10216.00	3707
45	113.0	4655.00	4368.00	1310.40	117.47	1174.7	8264.00	3271
50	122.0	3893.00	3602.00	1080.60	119.40	1194.0	6722.00	2875
55	131.0	3271.00	2986.00	895.80	121.32	1213.2	5498.00	2521
60	140.0	2760.00	2488.00	746.40	123.24	1232.4	4520.00	2206
65	149.0	2339.00	2083.00	624.90	125.16	1251.6	3734.00	1929
70	158.0	1990.00	1752.00	525.60	127.08	1270.8	3100.00	1685
75	167.0	1700.00	1480.00	444.00	128.99	1289.9	2586.00	1472
80	176.0	1458.00	1255.00	376.50	130.90	1309.0	2166.00	1287
85	185.0	1255.00	1070.00	321.00	132.80	1328.0	1822.60	1126
90	194.0	1084.00	915.50	274.65	134.71	1347.1	1540.00	986.8
95	203.0	939.30	786.60	235.98	136.61	1366.1	1306.40	865.4
100	212.0	816.80	678.60	203.58	138.51	1385.1	1112.60	760.3
105	221.0	712.60	587.60	176.28	140.40	1404.0	951.00	669.2
110	230.0	623.60	510.60	153.18	142.29	1422.9	815.80	590.1
115	239.0	547.30	445.30	133.59	144.18	1441.8	702.20	521.4
120	248.0	481.80	389.60	116.88	146.07	1460.7	606.40	461.6
125	257.0	425.30	341.90	102.57	147.95	1479.5	525.60	409.5
130	266.0	376.40	301.00	90.30	149.83	1498.3	N/A	363.9
135	275.0	334.00	265.80	79.74	151.71	1517.1	N/A	324.2
140	284.0	297.20	235.30	70.59	153.58	1535.8	N/A	289.4
145	293.0	265.10	208.90	62.67	155.46	1554.6	N/A	258.9
150	302.0	237.00	186.10	55.83	157.33	1573.3	N/A	232.0

Dwyer

SERIES O-4

OUTSIDE AIR TEMPERATURE SENSOR

NEMA 4X, Removable Terminal Block

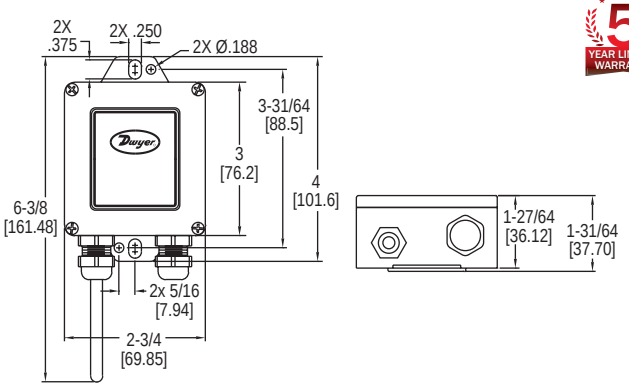

The **Series O-4 Outside Air Temperature Sensor** is great for monitoring ambient air temperatures in outdoor applications. The temperature sensors are mounted in a NEMA 4X enclosure with integral mounting tabs.

BENEFITS/FEATURES
- NEMA 4X weatherproof housing
- Surface or suspension mount

APPLICATIONS
- Agricultural house ventilation
- HVAC and building automation

MODEL CHART			
Model	**Sensor Type**	**Model**	**Sensor Type**
O-4A	10 kΩ type III thermistor	**O-4D**	Pt100 Ω RTD
O-4B	10 kΩ type II thermistor	**O-4E**	Pt1000 Ω RTD
O-4C	3 kΩ thermistor	**O-4F**	20 kΩ thermistor

SPECIFICATIONS

Accuracy: Thermistor temperature sensor: ±0.22°C @ 25°C (±0.4°F @ 77°F); RTD temperature sensor: DIN class B: ±0.3°C @ 0°C (±0.54°F @ 32°F).
Operating Temperature: -40 to 250°F.
Probe Diameter: 0.235″ (5.97 mm).
Probe Length: 3.5″.
Probe Material: 304 SS.
Mounting: Suspension or surface.
Enclosure Rating: NEMA 4X (IP66).
Weight: 3 oz (85 g).
Agency Approvals: Meets the technical requirements of EU Directive 2011/65/EU (RoHS II).

SERIES TE-A

AVERAGING TEMPERATURE SENSOR

Available in 6′, 12′ and 24′ Lengths

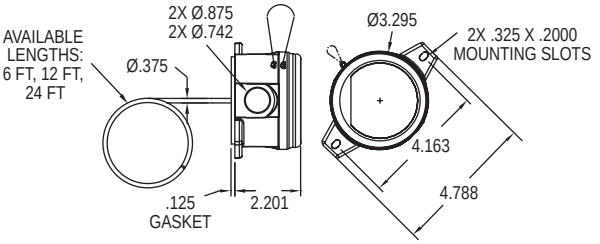

The **Series TE-A Averaging Temperature Sensor** features a long bendable aluminum capillary to measure the average temperature in large ducts and air handler units.

BENEFITS/FEATURES
- Easy to mount external tab housing
- 1/4 turn housing cover with chain
- Multiple conduit knockouts for easy installation positioning

APPLICATIONS
- Building automations
- Air handler unit monitoring
- Large air duct temperature monitoring

SPECIFICATIONS

Accuracy: Thermistor temperature sensor: ± 0.22°C @ 25°C (±0.4°F @ 77°F).
Temperature Limits: -40 to 302°F (-40 to 150°C).
Capillary Lengths: 6, 12 or 24′ (depending on model).
Cable Length: 4″.
Sensor Curves: See page reference ❶ below.
Probe Material: Bendable aluminum probe.
Housing Material: Meets UL, 94 V-0 polycarbonate plastic.
Weight: 14 oz (397 g).

MODEL CHART					
Model	**Sensor Type**	**Capillary Length**	**Model**	**Sensor Type**	**Capillary Length**
TE-AAG-A0634-00	10k type III NTC thermistor	6′	**TE-AAG-C0634-00**	3k NTC thermistor	6′
TE-AAG-A1234-00	10k type III NTC thermistor	12′	**TE-AAG-C1234-00**	3k NTC thermistor	12′
TE-AAG-A2434-00	10k type III NTC thermistor	24′	**TE-AAG-C2434-00**	3k NTC thermistor	24′
TE-AAG-B0634-00	10k type II NTC thermistor	6′	**TE-AAG-F0634-00**	20k NTC thermistor	6′
TE-AAG-B1234-00	10k type II NTC thermistor	12′	**TE-AAG-F1234-00**	20k NTC thermistor	12′
TE-AAG-B2434-00	10k type II NTC thermistor	24′	**TE-AAG-F2434-00**	20k NTC thermistor	24′

AVERAGING TEMPERATURE SENSOR CLIPS		
Model	**Color**	**Sensor Diameter Size**
CC1-GY	Grey	3/8″, 1/4″, or 1/8″
CC1-N	Natural	3/8″, 1/4″, or 1/8″
Note: Sold individually.		

❶Resistance vs. Temperature Table: See page 137 (Series TE-OND/RND/OSA)

Dwyer

SERIES TE-SNW

WEATHER RESISTANT SURFACE TEMPERATURE SENSOR

Strap On Design, Twist Off Cover, 2 to 6″ Pipe Sizes

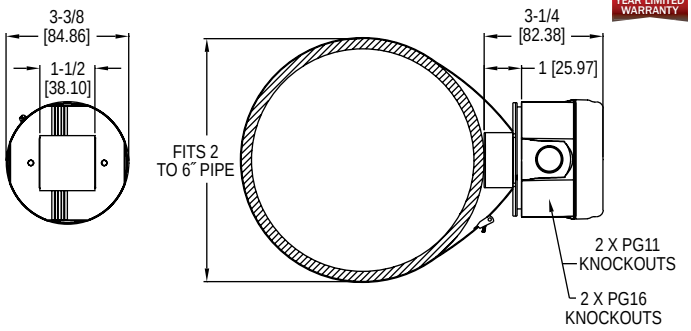

The **Series TE-SNW Weather Resistant Surface Temperature Sensor** non-intrusively measures the process temperature in hot and cold water loops in buildings. In order to work with most common building controllers, the output of the sensor can be chosen from 6 different RTD and Thermistor curves.

BENEFITS/FEATURES
- Easy to mount external tab housing
- 1/4 turn housing cover with chain
- Multiple conduit knockouts for easy installation positioning
- Non-intrusive temperature measurement of 2 to 6″ pipes

APPLICATIONS
- Heating or cooling loop line temperature monitoring
- HVAC systems

SPECIFICATIONS

Accuracy: Thermistor temperature sensor: ±0.22°C @ 25°C (±-0.4°F @ 77°F); RTD temperature sensor: DIN Class A ±0.15°C @ 0°C (±0.28°F @ 32°F).
Temperature Limits: Operating: -32 to 240°F (-35.5 to 115.5°C).
Sensor Curves: See page reference ❶ below.
Housing Material: Meets UL 94 V-0 polycarbonate plastic, NEMA 3R.
Weight: 7 oz (198 g).

MODEL CHART

Model	Sensor Type
TE-SNW-A	10 kΩ type III thermistor
TE-SNW-B	10 kΩ type II thermistor
TE-SNW-C	3 kΩ thermistor
TE-SNW-D	Pt100 Ω RTD
TE-SNW-E	Pt1000 Ω RTD
TE-SNW-F	20 kΩ thermistor

❶**Resistance vs. Temperature Table: See page 137 (Series TE-OND/RND/OSA)**

SERIES S2

SURFACE MOUNT TEMPERATURE SENSOR

RTD and Thermistor, 304 Stainless Steel Probe

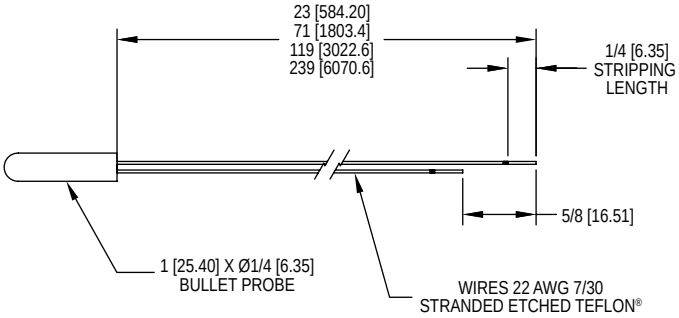

S2-1X no housing

The **Series S2 Surface Mount Temperature Sensor** provides a cost effective and reliable solution for surface contact temperature measurement of conditioned water pipes, low pressure steam or refrigerant lines.

BENEFITS/FEATURES
- Low profile sensor can be taped or strapped to the outside of a pipe
- Ideal for applications where immersion wells are not feasible

APPLICATIONS
- Heating or cooling loop line temperature monitoring
- HVAC systems

SPECIFICATIONS

Accuracy: Platinum RTD: ±0.1% @ 32°F (0°C), alpha 385 per DIN 43760; Thermistor: ±0.5°C interchangeable @ 77°F (25°C).
Operating Temperature: -40 to 250°F (-40 to 120°C).
Probe Diameter: 1/4″ (6.3 mm).
Probe Length: 1″ (25 mm).
Probe Material: 304 SS.

MODEL CHART

Example	**S2**	**-1**	**D**	**S2-1D**
Series	S2			Surface mount temperature sensor
Wire Length		1		2 ft cable
		6		6 ft cable
		10		10 ft cable
		20		20 ft cable
Temperature Sensor			A	10K NTC (TIII)
			B	10K NTC (TII)
			C	3K NTC
			D	Pt 100 (Available in 2 ft cable only)
			E	Pt 1000
			F	20K NTC

Teflon® is a registered trademark of The Chemours Company FC, LLC

Dwyer

TEMPERATURE SENSORS

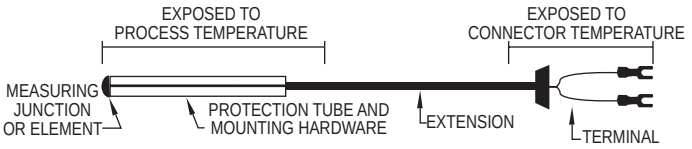

Thermocouple Types	Wire Types	Temperature Range (°F)	Temperature Range (°C)
J	Iron/constantan	32 to 1400	0 to 760
K	Chromel/alumel	32 to 2300	0 to 1200
E	Chromel/constantan	-300 to 1600	-184 to 871
T	Copper/constantan	-300 to 700	-184 to 371
R	Plat. 13%/rhod./plat.	32 to 2700	0 to 1482
S	Plat. 10%/rhod./plat.	32 to 2700	0 to 1482
RTD Types		**Temperature Range (°F)**	**Temperature Range (°C)**
Low range thin film		-58 to 392	-50 to 200
Medium range thin film		-58 to 896	-50 to 480
High range wire wound		-328 to 1112	-200 to 600

ORDERING SENSORS

Sensors are constructed with various types of protection/mounting hardware, extensions, and wire terminations. The sensor types and their temperature ranges are shown in the table. See "Temperature Limits" for maximum service temperatures applicable to the protection tube, mounting hardware, wire extensions, etc.
This section shows only a limited selection of the available sensors. The sensors are organized by hardware type. Most hardware can house any type thermocouple or RTD. Terminations are usually either lug type or standard plugs, but many other types are available. Various 'head enclosures' are also available. Dimensions can be custom designed to meet your specifications.

SERVICE TEMPERATURES	
304/316 SS tubing/protection/mounting hardware	1600°F
Inconel® 600 tubing/protection/mounting hardware	2100°F
Alumina	3400°F
Mullite	2700°F
Fiberglass insulated extension wire	842°F
FEP insulated extension wire	392°F
Junction box (BX) connector	400°F
Plug	400°F

TEMPERATURE LIMITS

Sensor selection depends on two separate temperatures: process temperature and connector temperature. Make sure the local temperature at each component does not exceed the maximum rated service temperature for that component. Note that extension wire must withstand the process temperature.

HARDWARE TYPE

Plain sheath

Bayonet mount, adjustable (with SS overbraid extension)

Bayonet mount, adjustable (with SS flex hose)

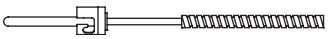

Bayonet mount, fixed

TERMINALS

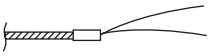

Stripped-ends – type 0

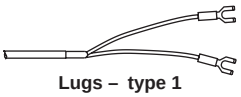

Lugs – type 1

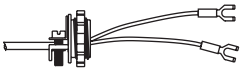

Lugs with BX connector – type 2

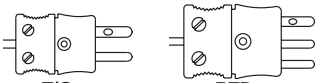

T/C RTD
Standard plug – type 3

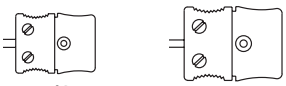

T/C RTD
Standard jack – type 4

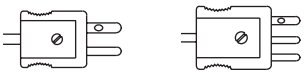

T/C RTD
Mini plug – type 6

T/C RTD
Mini jack – type 7

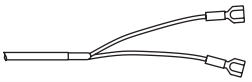

Fast tabs – type 8

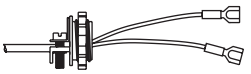

Fast tabs with BX – type 9

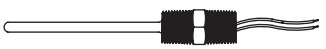

Hex nipple – type A, B

Hex bushing – type C, D

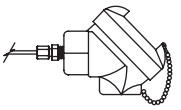

Screw cover head – type E, F, G

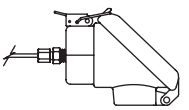

Snap cover head – type H

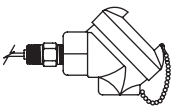

Screw cover head – type I, J, K, M, N, P

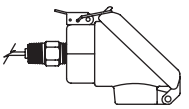

Snap cover head – type L, Q

Inconel® is a registered trademark of Huntington Alloys Corporation

THERMOCOUPLES AND RTD'S

GENERAL PURPOSE

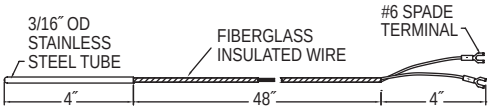

MODEL CHART - BASIC		
Model	**Sensor Type**	**Terminal**
122095-84	J	#6 spade
122095-01	K	#6 spade
122095-04	(3-wire) 100 Ω RTD	#6 spade

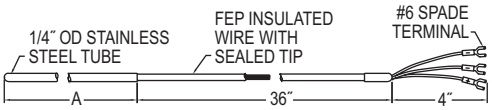

MODEL CHART - FEP INSULATION EXTENSION			
Model	**Sensor Type**	**A Length**	**Terminal**
122087-00	100 Ω RTD	6″	#6 spade

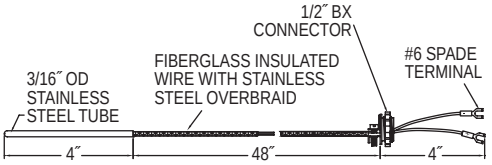

MODEL CHART - SS OVERBRAID EXTENSION			
Model	**Sensor Type**	**Bend**	**Terminal**
122095-19	J	0°	#6 spade
122095-25	100 Ω RTD	0°	#6 spade

SPECIAL PURPOSE

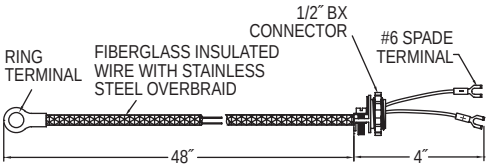

MODEL CHART - SURFACE THERMOCOUPLE (900°F MAX.)			
Model	**Sensor Type**	**Ring Terminal ID**	**Terminal**
122095-24	J	13/32″	#6 spade
122095-32	J	13/64″	#6 spade

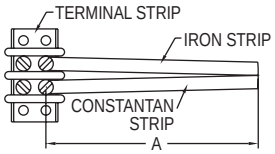

MODEL CHART - WEB STYLE		
Model	**A Length**	**Terminal**
122095-86	2.75″	No

MINERAL INSULATED

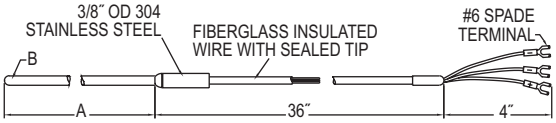

MODEL CHART				
Model	**Sensor Type**	**A Length**	**B Diameter**	**Terminal**
122088-00	100 Ω RTD	6″	1/4″	#6 spade
122088-01	100 Ω RTD	12″	1/4″	#6 spade
122086-00	100 Ω RTD	6″	1/8″	#6 spade

SERIES RTD

RESISTANCE TEMPERATURE DETECTOR

High Temperature, Mineral Insulated, 304 Stainless Steel Sheath

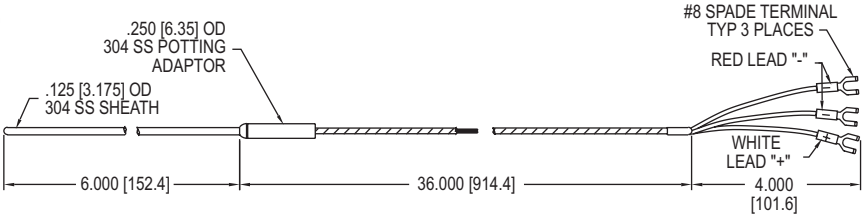

Precision **Series RTD Resistance Temperature Detector** offers excellent accuracy and stability over a wide temperature range. Industry standard 3-wire 100 Ω (DIN) probes are available in 6″ (15 cm), 12″ (30.5 cm), or 18″ (46 cm) sheath lengths with 30″ (76 cm) extension cable and spade lug terminals.

BENEFITS/FEATURES
- Long product life cycle from durable 304 SS sheath
- Variable installation environments due to the mineral insulated cable

APPLICATIONS
Air ducts, bearing temperature, oil temperature indicator, soldering equipment, ovens, environmental test chambers, pharmaceutical mfg., food processing, plastic molding, petroleum and chemical processing, electric generating plants, etc.

SPECIFICATIONS
Sensor Type: Wire wound, 100 Ω.
Temperature Range: -328 to 1202°F (-200 to 650°C).
Pressure Limits: 250 psig (17.2 bar).
Probe Material: 304 SS.
Extension Length: 30″ (76 cm).
Element Standard: DIN .00385 (Class B, 0.12%).

MODEL CHART		
Model	**Length**	**Diameter**
RTD-686	6″ (15 cm)	1/8″
RTD-646	6″ (15 cm)	1/4″

Dwyer

SERIES A-TC

THERMOCOUPLE WIRE

J type - FEP

J type - FB

K type - FEP

K type - FB

MODEL CHART - SPOOLS	
Model	**Specification**
A-TC-J25-FB	J type, 25´ on spool, fiber glass insulation, 450°C, black outer sheath, 24 AWG, 0.20 SQMM
A-TC-J25-FEP	J type, 25´ on spool, FEP insulation, 200°C, black outer sheath, 24 AWG, 0.20 SQMM
A-TC-K25-FB	K type, 25´ on spool, fiber glass insulation, 450°C, yellow outer sheath, 24 AWG, 0.20 SQMM
A-TC-K25-FEP	K type, 25´ on spool, FEP insulation, 200°C, yellow outer sheath, 24 AWG, 0.20 SQMM
A-TC-J50-FB	J type, 50´ on spool, fiber glass insulation, 450°C, black outer sheath, 24 AWG, 0.20 SQMM
A-TC-J50-FEP	J type, 50´ on spool, FEP insulation, 200°C, black outer sheath, 24 AWG, 0.20 SQMM
A-TC-K50-FB	K type, 50´ on spool, fiber glass insulation, 450°C, yellow outer sheath, 24 AWG, 0.20 SQMM
A-TC-K50-FEP	K type, 50´ on spool, FEP insulation, 200°C, yellow outer sheath, 24 AWG, 0.20 SQMM
A-TC-J100-FB	J type, 100´ on spool, fiber glass insulation, 450°C, black outer sheath, 24 AWG, 0.20 SQMM
A-TC-J100-FEP	J type, 100´ on spool, FEP insulation, 200°C, black outer sheath, 24 AWG, 0.20 SQMM
A-TC-K100-FB	K type, 100´ on spool, fiber glass insulation, 450°C, yellow outer sheath, 24 AWG, 0.20 SQMM
A-TC-K100-FEP	K type, 100´ on spool, FEP insulation, 200°C, yellow outer sheath, 24 AWG, 0.20 SQMM

PLUGS (MALE)

MODEL CHART - STANDARD SIZE SINGLE	
Model	**Type**
481-0001	J
481-0002	K
481-0003	T
481-0134	Cu (3-wire)

MODEL CHART - MINIATURE SIZE SINGLE	
Model	**Type**
481-0093	J
481-0095	K
481-0098	R
481-0097	S

JACKS (FEMALE)

MODEL CHART - STANDARD SIZE SINGLE	
Model	**Type**
481-0006	J
481-0007	K
481-0008	T
481-0135	Cu (3-wire)

MODEL CHART - MINIATURE SIZE SINGLE	
Model	**Type**
481-0100	J
481-0102	K

MINERAL INSULATED THERMOCOUPLES AND RTD'S

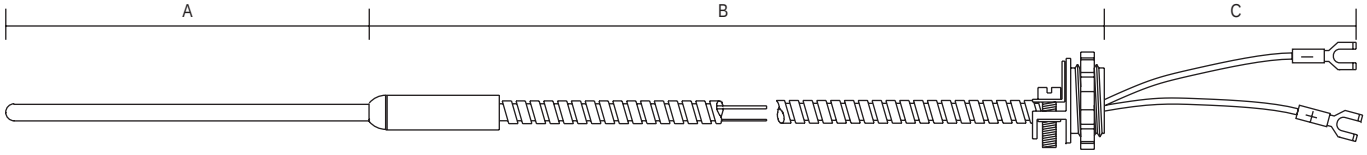

MINERAL INSULATED TRANSITIONS

Due to the varying size of connection wire and cable, a transition fitting is used between the cold end of the sheath and the connecting wires. This fitting measures 1-1/4″ long by 1/4″ OD for 1/8″ or smaller sheaths, and 1-1/2″ long by 3/8″ OD for 3/16″ and 1/4″ sheaths. Larger sheaths and sheaths terminating in connectors other than wire or cable do not require transition fittings.

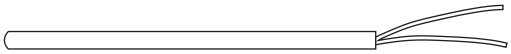

Basic sheath configuration

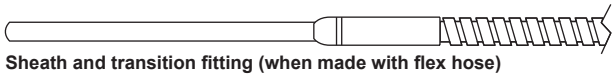

Sheath and transition fitting (when made with flex hose)

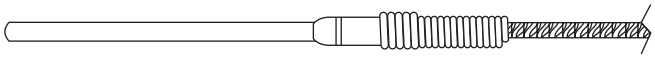

Sheath and transition fitting (when made with SS overbraid wire)

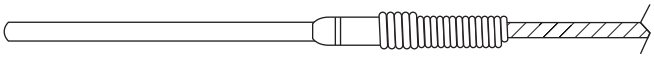

Sheath and transition fitting (when made with fiberglass wire)

Series R & 8 Mineral Insulated Thermocouples and RTD's are known for their excellent mechanical durability and resistance to electrical breakdown. Mineral Insulated Thermocouples can be bent to most any angle without special equipment.

MODEL CODING

Fill in the appropriate numbers or letters to specify the probe of your choice. Fill in all boxes. If an item or dimension does not apply, fill those boxes with zeros '0'.

SENSOR TYPE
6: 100 Ω RTD: 0.00385 Ω/°C
4: 100 Ω RTD: 0.00392 Ω/°C

RTD TYPE
2: 2-wire; Class B
3: 3-wire; Class B
4: 4-wire; Class B
5: 2-wire; Class A
6: 3-wire; Class A
7: 4-wire; Class A

A IN 1/10 INCH — **AA** IN 1/10 INCH — **B** IN INCHES — **C** IN INCHES

R □□□□ – □□□ – □□□ – □□□ – □□□ – □□
8 □□□□ – □□□ – □□□ – □□□ – □□□ – □□

SENSOR TYPE
J: T/C
K: T/C
E: T/C
T: T/C

HARDWARE TYPE
1: Plain sheath (304 SS)
2: Plain sheath (316 SS)
3: Inconel® 600 sheath

EXTENSION TYPE
0: Fiberglass singles
1: Fiberglass insulation
2: Fiberglass insulation with SS flex hose
3: Fiberglass insulation with SS overbraid

SENSOR TERMINALS
0: Stripped ends
1: Leads with #6 spade lugs
2: Leads with #6 spade lugs and 1/2 BX
3: Standard plug
4: Standard jack
6: Mini plug
7: Mini jack
8: Leads with 1/4″ fastabs
9: Leads with 1/4″ fastabs 1/2″ BX
A: 1/2″ NPT hex nipple (316 SS)
B: 3/4″ NPT hex nipple (316 SS)
C: 1/2″ NPT hex bushing (316 SS)
D: 3/4 NPT hex bushing (316 SS)

See table for **HEAD ASSEMBLY OPTIONS**

ELEMENTS
1: Single
2: Dual

JUNCTION TYPE
1: Grounded
2: Ungrounded
3: Exposed tip

SENSOR O.D.
1: 1/16″
2: 1/8″
3: 3/16″
4: 1/4″
5: 3/8″

BEND
1: None
2: 45°
3: 90°

HEAD ASSEMBLY OPTIONS (3/4″ NPT Conduit Connection)
E: Screw cover head, AL with no process connection
F: Screw cover head, plastic with no process connection
G: Screw cover head, SS with no process connection
H: Snap cover head, AL with no process connection
I: Screw cover head, AL with 1/2″ NPT process connection
J: Screw cover head, plastic with 1/2″ NPT process connection
K: Screw cover head, SS with 1/2″ NPT process connection
L: Snap cover head, AL with 1/2″ NPT process connection
M: Screw cover head, AL with 3/4″ NPT process connection
N: Screw cover head, plastic with 3/4″ process connection
P: Screw cover head, SS with 3/4″ process connection
Q: Snap cover head, AL with 3/4″ process connection

Inconel® is a registered trademark of Huntington Alloys Corporation

Dwyer

SERIES 4 & 5

GENERAL PURPOSE AND BAYONET TYPE THERMOCOUPLES & RTD'S

GENERAL PURPOSE

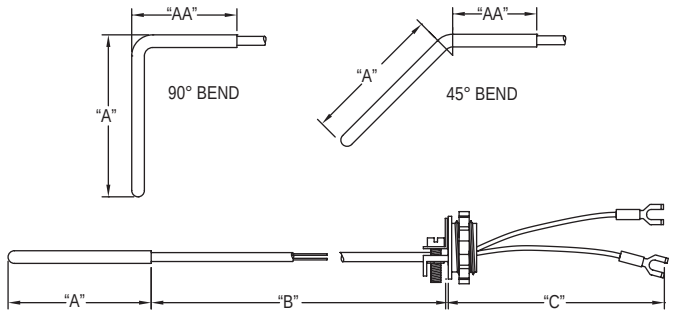

BAYONET

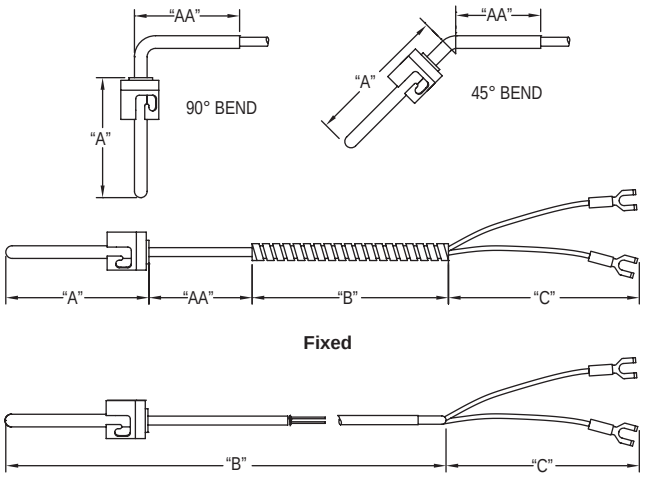

Series 4 & 5 General Purpose and Bayonet Type Thermocouples & RTD's tip temperatures can be as high as 842°F (450°C) for fiberglass insulated wire, and 392°F (200°C) for FEP insulated wire. Models can be specified with lead wires or head assembly construction. For higher temperatures see the Series R & 8 Mineral Insulated Probes.❶

MODEL CODING

Fill in the appropriate numbers or letters to specify the probe of your choice. Fill in all boxes. If an item or dimension does not apply, fill those boxes with zeros '0'.

SENSOR TYPE
6: 100 Ω RTD: 0.00385 Ω/°C
Z: 1000 Ω RTD: 0.00385 Ω/°C
4: 100 Ω RTD: 0.00392 Ω/°C

RTD TYPE
2: 2-wire; Class B
3: 3-wire; Class B
5: 2-wire; Class A
6: 3-wire; Class A

A IN 1/10 INCH — **AA IN 1/10 INCH** — **B IN INCHES** — **C IN INCHES**

4 [ ][ ][ ][ ] – [ ][ ][ ][ ] – [ ][ ][ ] – [ ][ ][ ] – [ ][ ][ ] – [ ][ ]

5 [ ][ ][ ][ ] – [ ][ ][ ][ ] – [ ][ ][ ] – [ ][ ][ ] – [ ][ ][ ] – [ ][ ]

SENSOR TYPE
J: T/C
K: T/C
E: T/C
T: T/C

HARDWARE TYPE
1: Plain sheath (316 SS)
2: Plain sheath with FEP coating
4: Back filled sheath*
5: Back filled sheath with FEP coating*
6: Bayonet mount adjustable length
7: Bayonet mount fixed length

EXTENSION TYPE
1: Fiberglass insulation 842°F/450°C
2: Fiberglass insulation with SS flex hose
3: Fiberglass insulation with SS overbraid
4: FEP insulation 392°F/200°C
5: FEP insulation with SS overbraid
6: FEP insulation with FEP coated flex hose

SENSOR TERMINALS
0: Stripped ends
1: Leads with #6 spade lugs
2: Leads with #6 spade lugs 1/2 BX
3: Standard plug
4: Standard jack
6: Mini plug
7: Mini jack
8: Leads with 1/4˝ fastabs
9: Leads with 1/4˝ fastabs 1/2˝ BX
A: 1/2˝ NPT hex nipple (316 SS)*
B: 3/4˝ NPT hex nipple (316 SS)*
C: 1/2˝ NPT hex bushing (316 SS)*
D: 3/4 NPT hex bushing (316 SS)*

See list for **HEAD ASSEMBLY OPTIONS***

*Options only available on Series 4 RTD's

ELEMENTS
1: Single
2: Dual

JUNCTION TYPE
1: Grounded
2: Ungrounded
3: Exposed tip

SENSOR O.D.
2: 1/8˝
3: 3/16˝
4: 1/4˝
5: 3/8˝

BEND
1: None
2: 45°
3: 90°

HEAD ASSEMBLY OPTIONS* (3/4˝ NPT Conduit Connection)
E: Screw cover head, AL with no process connection
F: Screw cover head, plastic with no process connection
G: Screw cover head, SS with no process connection
H: Snap cover head, AL with no process connection
I: Screw cover head, AL with 1/2˝ NPT process connection
J: Screw cover head, Plastic with 1/2˝ NPT process connection
K: Screw cover head, SS with 1/2˝ NPT process connection
L: Snap cover head, AL with 1/2˝ NPT process connection
M: Screw cover head, AL with 3/4˝ NPT process connection
N: Screw cover head, Plastic with 3/4˝ process connection
P: Screw cover head, SS with 3/4˝ process connection
Q: Snap cover head, AL with 3/4˝ process connection

❶See page 143 (Series R & 8)

SPECIAL APPLICATION THERMOCOUPLES & RTD'S

SERIES 9 SPECIALTY SENSOR STYLES

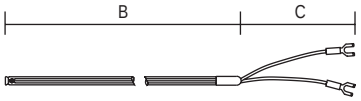

Flexible FEP covered bead junction

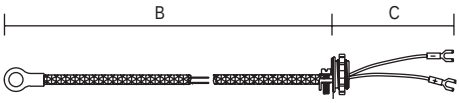

Ring type surface thermocouples and RTD's

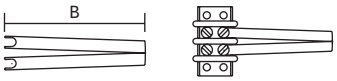

Replacement element

Assembly

Web type surface thermocouples

SERIES P PENETRATION PROBE STYLES

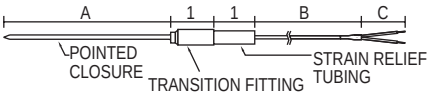

1. Transition fitting

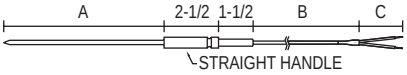

2. Straight handle

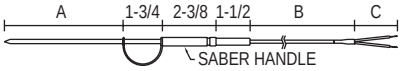

3. Saber handle

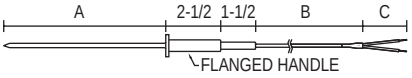

4. Flanged handle

6&7. Euro style handle (FEP or SS)

Series 9 & P Special Application Thermocouples and RTD's cover a wide variety of types and configurations. This section covers FEP covered thermocouples and RTD's, ring type thermocouples and RTD's for surface measurement, web type thermocouples for surface measurement of moving objects such as rollers, and penetration thermocouples and RTD's with sharp tips for measurement of viscous liquids and semisolids such as plastic compounds, rubber and slightly frozen food products.

MODEL CODING

Fill in the appropriate numbers or letters to specify the probe of your choice. Fill in all boxes. If an item or dimension does not apply, fill those boxes with zeros '0'.

9 □ □ □ □ – 1 □ 0 – □ □ – □ □

B IN INCHES — C IN INCHES

SENSOR TYPE
J: T/C
K: T/C
E: T/C
T: T/C
6: RTD DIN
4: RTD NIST
Z: RTD DIN 1K

HARDWARE TYPE
5: Bead junction with FEP coating
6: Ring #10 (0.196″ ID)
7: Ring #8 (0.144″ ID)
8: Ring 3/8″ (0.390″ ID)
9: Web

EXTENSION TYPE
0: None
1: Fiberglass insulation 842°F/450°C
2: Fiberglass insulation with SS flex hose
3: Fiberglass insulation with SS overbraid
4: FEP insulation 392°F/200°C
5: FEP insulation with SS overbraid
6: FEP insulation with FEP coated flex hose

SENSOR TERMINALS
0: None
1: Lugs
2: Lugs with BX
3: Standard plug
4: Standard jack
6: Mini plug
7: Mini jack
8: Fastabs
9: Fastabs with BX

JUNCTION TYPE
1: T/C
2: 2-wire RTD; Class B
3: 3-wire RTD; Class B
6: 2-wire RTD; Class A
7: 3-wire RTD; Class A

P □ □ □ □ – □ □ – □ □ □ – □ □ □ – □ □

A* IN 1/10 INCH — B IN INCHES — C IN INCHES

SENSOR TYPE
J: T/C
T: T/C
6: RTD DIN
4: RTD NIST
Z: RTD DIN 1K

PROBE STYLE
1: Transition fitting, SS
2: Straight handle, SS
3: Saber handle, SS
4: Flanged handle, SS
6: Euro style, FEP
7: Euro style, SS

EXTENSION TYPE
4: FEP insulation
6: FEP over SS flex hose

SENSOR TERMINALS
0: Stripped ends
1: Lugs
2: Lugs with BX
3: Standard plug
4: Standard jack
6: Mini plug
7: Mini jack

JUNCTION TYPE
1: Grounded
2: Ungrounded

SENSOR O.D.
7: 0.134 O.D. hypodermic
8: 0.180 O.D. hypodermic

*"A" Dimension maximum length is 12″ (30 cm)

Dwyer

SERIES T

TEMPERATURE SENSOR ASSEMBLIES WITH THERMOWELLS

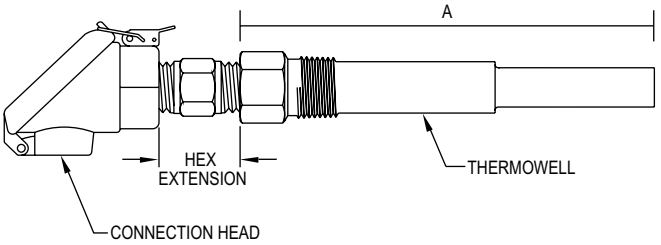

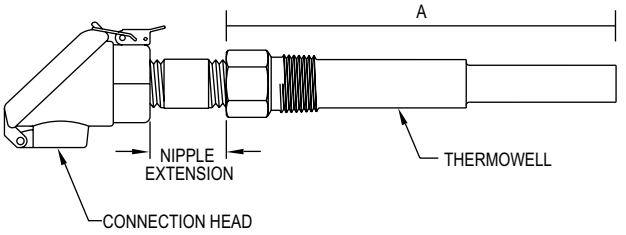

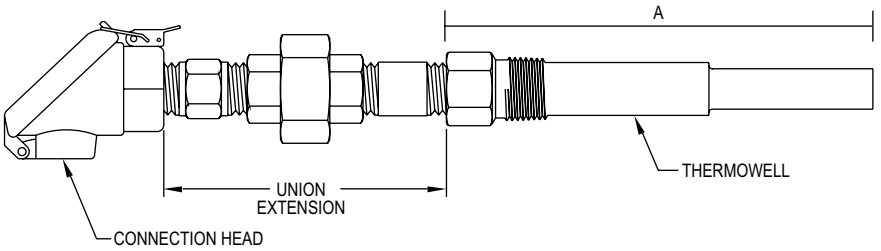

Series T Temperature Sensor Assemblies with Thermowells are available in a variety of head styles and thermowell materials. All elements are spring loaded to ensure positive contact in the thermowell. Thermowells are non-lagging. The sensor sheath material is constructed of 316 SS regardless of the well material specified.

MODEL CODING

Fill in the appropriate numbers or letters to specify the probe of your choice. Fill in all boxes. If an item or dimension does not apply, fill those boxes with zeros '0'.

A
IN INCHES

T ☐ ☐ ☐ ☐ – ☐ ☐ ☐ – ☐ ☐

SENSOR TYPE
J: T/C
K: T/C
E: T/C
T: T/C
6: 100 Ω RTD: 3-wire 0.00385 Ω/°C
Z: 1000 Ω RTD: 3-wire 0.00385 Ω/°C
4: 100 Ω RTD: 3-wire 0.00392 Ω/°C

WELL MATERIAL
0: None
1: 304 SS
2: 316 SS
3: Brass
4: Carbon steel

TAPER/BORE
0: None
1: Step/0.260
2: Straight/0.385
3: Taper/0.260
4: Taper/0.385
5: Straight/0.260

EXTENSION
1: Steel 1/2 NPT 1 in hex
4: Steel 1/2 NPT 4 in nipple
7: Steel 1/2 NPT 4 in union
K: 316 SS 1/2 NPT 1 in hex
N: 316 SS 1/2 NPT 4 in nipple
S: 316 SS 1/2 NPT 4 in union

ELEMENTS
1: Single (ungrounded/RTD)
2: Dual (ungrounded/RTD)
3: Single (grounded)
4: Dual (grounded)

HEAD
0: Aluminum screw cover
1: Aluminum snap cover
2: Polypropylene snap cover
3: Polypropylene screw cover
5: 304 SS screw cover

PROCESS CONNECTION (NOMINAL/REDUCED O.D.)
0: None*
1: 1/2″ NPT (5/8″ to 1/2″ step)
4: 3/4″ NPT (3/4″ to 1/2″ step)
6: 1″ NPT (7/8″ to 1/2″ step)
7: 3/4″ NPT (7/8″ to 5/8″ taper)
8: 1″ NPT (1-1/16″ to 5/8″ taper)
9: 3/4″ NPT (7/8″ to 49/64″ taper)
A: 1″ NPT (1-1/16″ to 49/64″ taper)
B: 1/2″ NPT (5/8″ straight)
E: 3/4″ NPT (3/4″ straight)
D: 1″ NPT (7/8″ straight)

*For replacement sensors, specify "0" for well material, taper and bore, and process connections.

USA: California Proposition 65
⚠**WARNING:** This product can expose you to chemicals including Lead, which is known to the State of California to cause cancer and birth defects or other reproductive harm. For more information go to www.P65Warnings.ca.gov.

THERMOWELLS

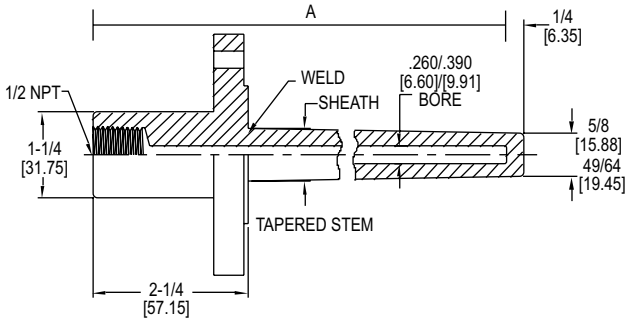

Tapered flanged

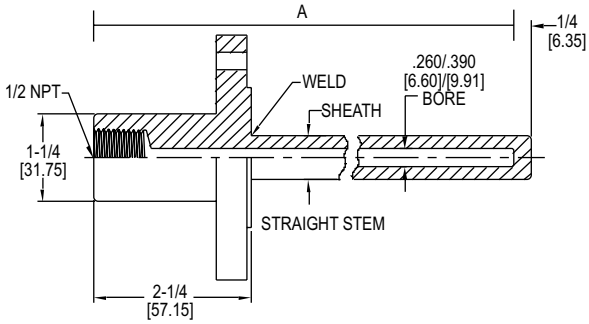

Straight flanged

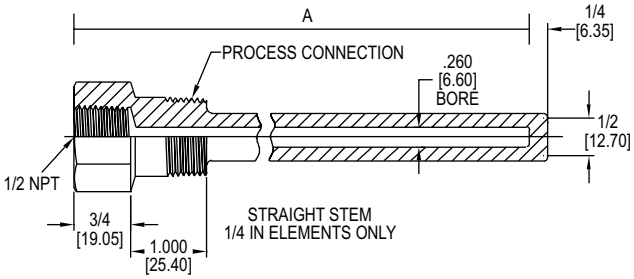

Straight stem

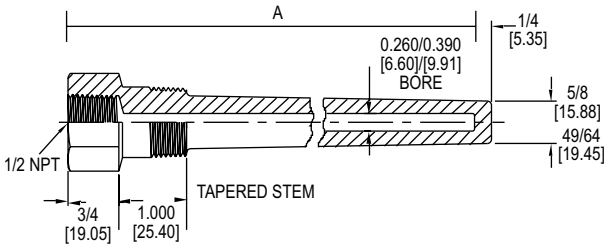

Tapered stem

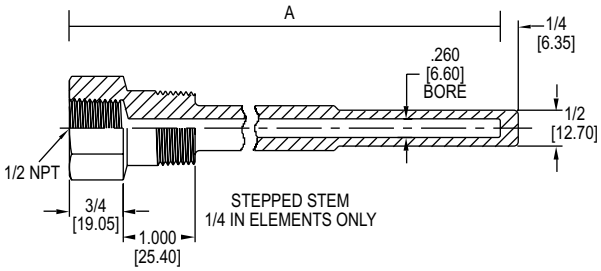

Stepped stem

Series W Thermowells select bore as 0.260 for 1/4″ diameter elements and 0.390 for 3/8″ diameter elements. Specify heavy duty mounting for tapered sheaths.

MODEL CODING

Fill in the appropriate numbers or letters to specify the thermowell of your choice. Fill in all boxes. If an item or dimension does not apply, fill those boxes with zeros ‘0’.

A
IN INCHES

W □ □ □ □ – □ □ □ – □ □

HARDWARE TYPE
1: 304 SS sheath
2: 316 SS sheath
3: Brass
4: Carbon steel

TAPER/BORE
0: Straight/0.260
1: Step/0.260
2: Straight/0.390
3: Taper/0.260
4: Taper/0.390

INSIDE THREAD
1: 1/2″ female NPT

PROCESS CONNECTION
1: 1/2 NPT
2: 3/4 NPT
3: 1 NPT
4: 1″ 150# flange
5: 1-1/2″ 150# flange
6: 2″ 150# flange
7: 1″ 300# flange
8: 1-1/2″ 300# flange
9: 2″ 300# flange
A: 1″ 600# flange
B: 1-1/2″ 600# flange
C: 2″ 600# flange

MOUNTING
1: Threaded
2: Heavy duty threaded
3: Heavy duty flanged
4: Flanged

LAG
0: None
2: 2″
3: 3″

SHEATH O.D. BASE / TAPER
1: 5/8″ / 1/2″ step
4: 3/4″ / 1/2″ step
6: 7/8″ / 1/2″ step
7: 7/8″ / 5/8″ taper
8: 1-1/16″ / 5/8″ taper
9: 7/8″ / 49/64″ taper
A: 1-1/16″ / 49/64″ taper
B: 5/8″ straight
D: 7/8″ straight
E: 3/4″ straight

USA: California Proposition 65
⚠ **WARNING:** This product can exposure to chemicals including Lead, which is known to the State of California to cause cancer and birth defects or other reproductive harm. For more information go to www.P65Warnings.ca.gov

THERMOCOUPLE ACCESSORIES

EXTENSION CABLES

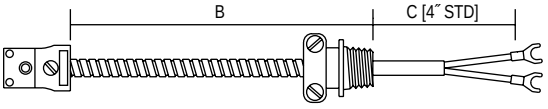

MODEL CODING

Fill in the appropriate numbers or letters to specify the extension cable of your choice. Fill in all boxes. If an item or dimension does not apply, fill those boxes with zeros ‘0’.

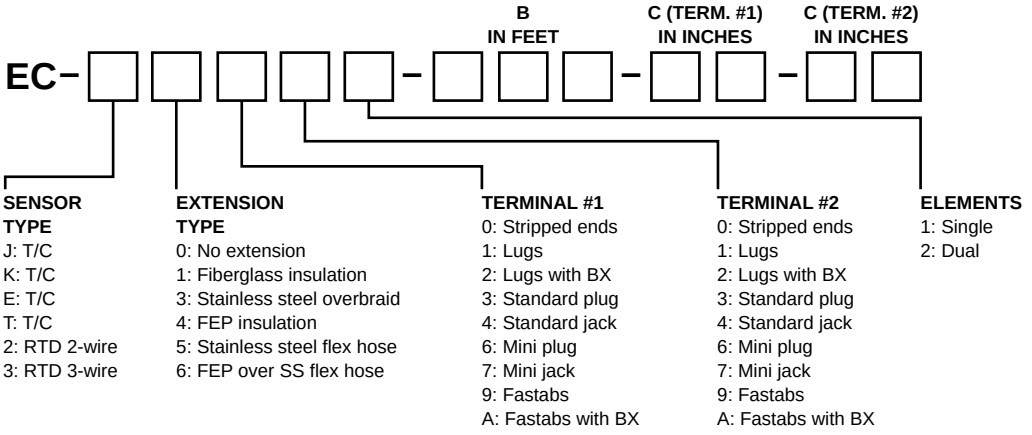

COMPRESSION FITTINGS

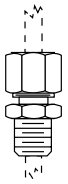

MODEL CHART							
Model	**Type OD**	**Thread Size**	**Material**	**Model**	**Type OD**	**Thread Size**	**Material**
144-0012	1/8″	1/8-27 NPT	Brass	**144-0014**	1/4″	1/4-18 NPT	Brass
144-0009	3/16″	1/8-27 NPT	Brass	**144-0024**	1/4″	1/8-27 NPT	SS
144-0022	3/16″	1/8-27 NPT	SS	**144-0037**	.260 - .275″	1/4-18 NPT	FEP

PIPE ADAPTERS

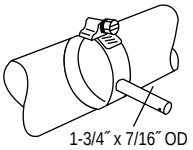

MODEL CHART					
Model	**Fits Pipe Diameters**	**Model**	**Fits Pipe Diameters**	**Model**	**Fits Pipe Diameters**
1568-0007	1/2″ to 7/8″	**1568-0020**	6-1/4″ to 6-3/4″	**1568-0025**	17-3/4″ to 18-1/4″
1568-0008	7/8″ to 1-1/2″	**1568-0021**	7-3/4″ to 8-1/4″	**1568-0027**	19-3/4″ to 20-1/4″
1568-0009	1-5/16″ to 2-1/4″	**1568-0022**	9-3/4″ to 10-1/4″	**1568-0028**	23-3/4″ to 24-1/4″
1568-0011	2-1/4″ to 3-5/16″	**1568-0023**	11-3/4″ to 12-1/4″	**1568-0029**	29-3/4″ to 30-1/4″
1568-0013	4-5/16″ to 5-1/4″	**1568-0024**	15-3/4″ to 16-1/4″		

BAYONET ADAPTERS

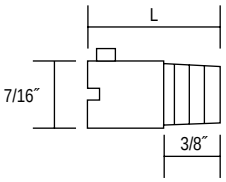

MODEL CHART		
Model	**L**	**Thread Size**
1568-0001	7/8″	1/8-27 UNF
1568-0002	7/8″	3/8-24 UNF
1568-0003	1-3/8″	1/8-27 UNF
1568-0004	1-3/8″	3/8-24 UNF
1568-0005	2-1/2″	1/8-27 UNF
1568-0006	2-1/2″	3/8-24 UNF
1568-0016	2-1/2″	10 x 1.5 mm

TRANSITION ADAPTERS

These adapters convert the miniature plug on the end of the coiled cable on the Master Probe Handle to a standard lug. Simply plug the cord into the adaptor.

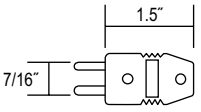

MODEL CHART	
Model	**Type**
481-0127	K
481-0128	T

USA: California Proposition 65
⚠**WARNING:** This product can expose you to chemicals including Lead, which is known to the State of California to cause cancer and birth defects or other reproductive harm. For more information go to www.P65Warnings.ca.gov.

SELECTION GUIDE
pages 150-153

TYPICAL APPLICATIONS
pages 154-155

HVAC MEASUREMENT GUIDE
pages 156-161

HVAC Balancing Instruments
pages 162-165

Manometers, Portable
pages 165-167, 171-174, 176-177,179-181

Air Flow Grids
page 168

Thermo-Hygrometers
page 168

Thermo-Anemometers
pages 169-170

Manometers, Air Velocity
pages 175,182

Air Quality Meters
page 178

Pressure Anemometers
page 178

Pitot Tubes
pages 183-185

Wind Meters
pages 186-187

Vane Anemometer
page 187

Flowmeter Kits
page 188

Thermocouple Thermometers
page 188

Gas Pressure Test Kits
page 189

Tachometer
page 190

Signal Generators
page 191

Calibration Pumps
pages 192-195

Data Loggers
pages 196-200

FEATURED PRODUCTS

SMART AIR HOOD® BALANCING INSTRUMENT

SERIES SAH | page 162

- Patent pending Quad Flow Design Technology enables accurate readings
- Predictive Balancing that guides setting the optimal flow set point for each sequential terminal
- The ergonomic design is lighter and easier to use than traditional air flow hoods

TEST, ADJUST, AND BALANCE KIT

SERIES TABKIT | page 163

- One stop shop for air, water, temperature, humidity and electrical instruments
- A certificate of NIST calibration is included for each instrument inside the kit
- Save time by sending everything back to us, we can recalibrate all equipment in the kit

Dwyer

DIGITAL
Manometers

SERIES	477AV* - page 171	475* - page 172	476A* - page 173	478A* - page 173
Range	1 in w.c. to 150 psi (.25 kPa to 10.34 bar)	1 in w.c. to 150 psi (.25 kPa to 10.34 bar)	±20 in w.c. (±5 kPa)	±4 in w.c.; ±60 in w.c. (±1 kPa; ±15 kPa)
Service	Air and compatible gases	Air and compatible combustible gases	Air and compatible gases	Air and compatible gases
Wetted Materials	Consult factory	Consult factory	Consult factory	Consult factory
Accuracy	±0.5% FS	±0.5% FS	±1.0% FS	±0.5% FS
Pressure Limits	5 psig (1 to 10 in w.c.); 10 psig (20 to 40 in w.c.); 30 psig (200 in w.c. to 10 psi); 60 psig (20 to 30 psi); 150 psig (100 psi); 200 psig (150 psi)	5 psig (1 to 10 in w.c.); 10 psig (20 to 40 in w.c.); 30 psig (200 in w.c. to 10 psi); 60 psig (20 to 30 psi); 150 psig (100 psi); 200 psig (150 psi)	5 psig (.34 bar)	5 psig (.34 bar)
Temperature Limits	0 to 140°F (-17.8 to 60°C)	0 to 140°F (-17.8 to 60°C)	0 to 140°F (-17.8 to 60°C)	0 to 140°F (-17.8 to 60°C)
Comp. Temp. Limits	32 to 104°F (0 to 40°C)	32 to 104°F (0 to 40°C)	32 to 104°F (0 to 40°C)	32 to 104°F (0 to 40°C)
Housing Protection	Rugged aluminum housing	Rugged aluminum housing	Rugged aluminum housing	Rugged aluminum housing
Display	4-digit backlit LCD	4-digit LCD	4-digit LCD	4-digit LCD
Memory	40 readings	N/A	N/A	N/A
Process Connection	(2) Barbed connections for use with 1/8″ or 3/16″ ID tubing (Compression fittings for -7, -8 ranges)	(2) Barbed connections for use with 1/8″ or 3/16″ ID tubing (Compression fittings for -7, -8 ranges)	Barbed connection for use with 3/16″ or 1/4″ ID tubing	(2) Barbed connection for use with 3/16″ or 1/4″ ID tubing
Approvals	CE	CE, FM	CE	CE

***CALIBRATION SERVICES AVAILABLE**

These Selection Guides are for quick comparison of similar products. Please refer to the catalog page number referenced for complete product information and specifications.

DIGITAL
Manometers

SERIES	477B* - page 174	HM35* - page 176	490A* - page 177
Range	20 in w.c. to 100 psi (4.982 to 689.5 kPa)	10 in w.c. to 1305 psi (2.5 to 9000 kPa)	15 to 200 psi (1 to 13.8 bar)
Service	Air and compatible gases	Air and compatible gases	Compatible gases and liquids
Wetted Materials	Consult factory	18/8 SS	316L SS; With 3-way valve: Buna-N, silicone grease, PTFE, brass 360, copper, reinforced acetal copolymer
Accuracy	±0.1% FS	(±0.2% FS, ±0.1% FS, or ±0.05% FS) ±1 digit	±0.5% FS
Pressure Limits	3 psig (20 to 40 in w.c.); 15 psig (200 in w.c.); 30 psig (10 psi); 60 psig (30 psi); 100 psig (50 psi); 200 psig (100 psi)	N/A	30 psig (15 psi); 60 psig (30 psi); 100 psig (50 psi); 200 psig (100 psi); 400 psig (200 psi); 1000 psig (500 psi)
Temperature Limits	0 to 140°F (-17.8 to 60°C)	32 to 122°F (0 to 50°C)	32 to 140°F (0 to 60°C)
Comp. Temp. Limits	N/A	N/A	N/A
Housing Protection	Rugged aluminum housing	IP54 (NEMA 3)	Rugged aluminum housing
Display	4-digit backlit LCD	Graphical backlit LCD, 128 x 64 points	4-digit backlit LCD
Memory	40 readings	10,742 readings	Up to 40 readings
Process Connection	(2) Barbed connections for use with 1/8″ or 3/16″ ID tubing (Compression fittings for -6, -7 ranges)	Hose 4/6 mm or 1/8″ NPT	(2) 1/8″ female NPT
Approvals	CE	N/A	CE

***CALIBRATION SERVICES AVAILABLE**

These Selection Guides are for quick comparison of similar products. Please refer to the catalog page number referenced for complete product information and specifications.

Dwyer

THERMO
Anemometers

SERIES	471B* - page 169	473B* - page 170
Air Velocity Range	0 to 6000 FPM (0 to 30 m/s)	40 to 5000 FPM (0.2 to 25 m/s)
Air Velocity Accuracy	±3% FS	±1.5% of reading ±20 FPM
Temperature Range	-40 to 212°F (-40 to 100°C)	-20 to 212°F (-29 to 100°C)
Temperature Accuracy	±0.5°F (±0.28°C)	±0.54°F (±0.3°C)
Humidity Range	N/A	0 to 100% RH
Humidity Accuracy	N/A	±2% RH
Air Volume Range	19,999 in selected flow units	19,999 in selected flow units
Meter Temperature Range	Process air velocity: -20 to 212°F (-29 to 100°C); Process temperature: -40 to 212°F (-40 to 100°C); Ambient: 5 to 125°F (-15 to 51°C)	Process: -20 to 212°F (-29 to 100°C); Ambient: 5 to 125°F (-15 to 51°C)
Display	4.5-digit backlit LCD	4.5-digit backlit LCD
Approvals	CE	N/A

***CALIBRATION SERVICES AVAILABLE**

These Selection Guides are for quick comparison of similar products. Please refer to the catalog page number referenced for complete product information and specifications.

CALIBRATION
Pumps

SERIES	HP - page 192	CHP - page 192	A-396A - page 193	PCHP - page 194	HCHP - page 194	BCHP - page 195
Output Range	-27″ Hg to 45 psig (-0.91 to 3 bar)	-28.8″ Hg to 100 psi (-0.975 to 3.4 bar)	<1 in w.c. to 72 psig (5 bar)	-28″ Hg to 600 psi (-0.945 to 40 bar)	0 to 10,000 psi (0 to 700 bar)	-28″ Hg to 870 psi (-0.95 to 60 bar)
Process Connection	1/4″ female NPT	1/8″ female NPT	Barbed fitting or 1/8″ female NPT	1/4″ female NPT/BSPT	1/4″ female NPT/BSPT	1/4″ female BSPT (NPT available)
Gage Connection	1/4″ female NPT	1/8″ female NPT	N/A	1/8″ female NPT/BSPT	1/4″ female NPT/BSPT	1/2″ female BSPT
Materials	N/A	Acetel plastic and anodized aluminum	N/A	SS fittings, anodized aluminum housing, plastic/rubber handles, and nitrile O-rings	SS, polyurethane, anodized hard-coat aluminum, PTFE, and nitrile	Anodized aluminum, brass, and ABS

These Selection Guides are for quick comparison of similar products. Please refer to the catalog page number referenced for complete product information and specifications.

Current/voltage signal generator used to calibrate panel meters

The Model CSG digital signal generator is perfect for generating or simulating input signals to panel meters and process controllers. The signal generator is capable of sourcing up to 10 VDC or 20 mA in 1 VDC or 1 mA steps. The backlit digital display allows users to quickly compare the reading on the Model CSG to that of the panel meter or process controller. The signal from the Model CSG can be used to set up the upper and lower limits of the process range. It can also be used to ensure that set point and alarm functions are working properly on the panel meter or process controller.

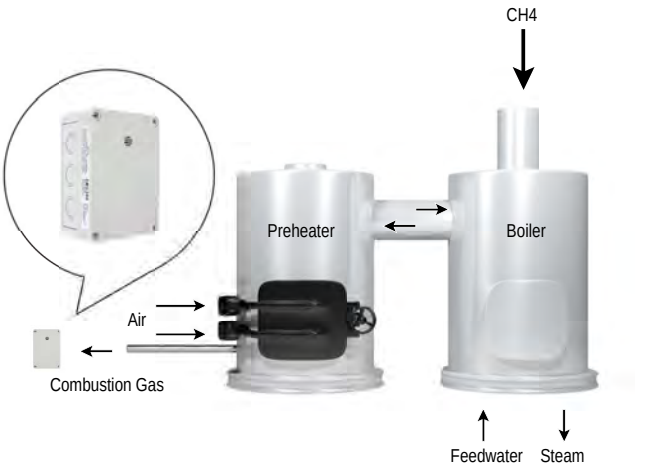

Carbon monoxide transmitter/switch maximizes boiler efficiency while monitoring harmful products of combustion

There are several critical factors in attaining efficient combustion for boilers and other combustors. Monitoring the temperature of combustion and minimizing the amount of excess air in the system are undoubtedly essential steps. A Dwyer® Model CMS300 measures harmful CO gas bi-products of the combustion cycle in a boiler system. The switch contact in the CMS300 can be used for a local alarm indication, in addition to sending an analog output to a building control system.

FREE DOWNLOAD!
Download our Air Velocity and Flow Calculator app today.

HVAC mobile application

For those customers in the HVAC or BAS industry, Dwyer offers the Air Velocity and Flow Calculator App available on the Google Play® store. One can easily convert velocity pressure to air velocity or air velocity to air volume. Converting velocity pressure to air volume is advantageous for effortlessly changing the pressure on your Magnehelic® differential pressure gage or manometer to velocity. Moreover, this calculator also includes air density factors from humidity levels. By utilizing the air velocity to air volume functionality, one can simplistically convert the air velocity to air flow rates from duct dimensions, with just the tap of a button.

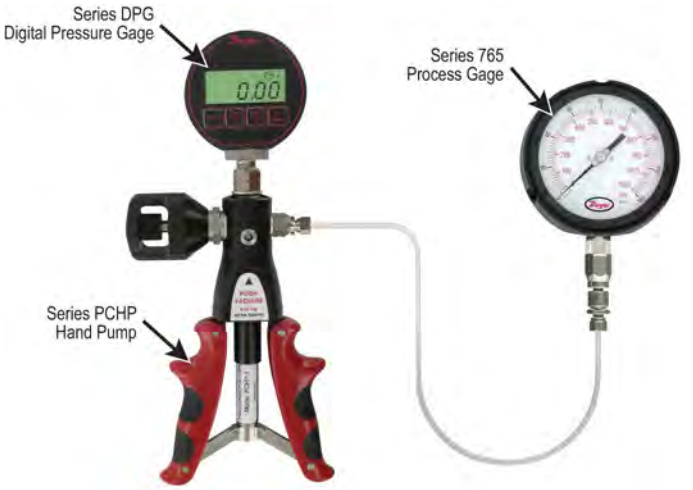

Field calibrate and certify pressure gages

Using the Series PCHP with a Series DPG-100, a technician can calibrate or certify process pressure gages up to 1% accurate. The Model PCHP-1 hand pump can easily supply pressures up to 600 PSI by squeezing the handle and adjusting the volume control valve. The pump has two connections to be connected with a test gage, such as the Dwyer® Series DPG-100, and a process gage, such as the Dwyer® Series 765.

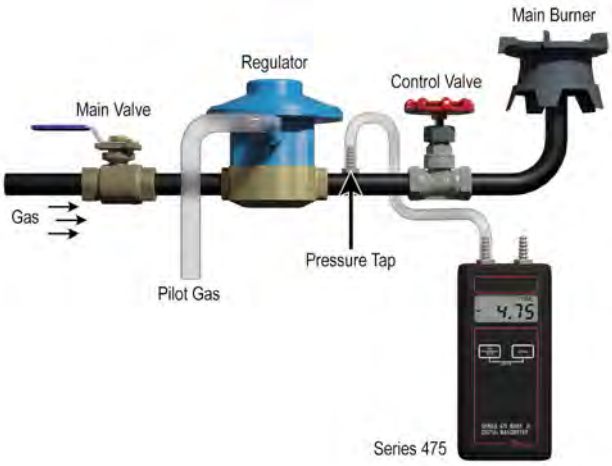

Digital manometers used to check gas pressure to a heating burner

Checking the gas pressure to a heating unit on the burner side of the regulator is a standard installation and service routine. The Dwyer® Series 475 handheld digital manometer is a low-cost, durable device that is easily transportable in a pocket or briefcase. Units are highly accurate with 0.5% full-scale accuracy. Some servicemen prefer our portable Dwyer® Magnehelic® differential pressure gage with dial type scale for field use.

Determine air velocity and temperature levels in ducts or air supply grills

The Dwyer® Series 471B digital thermo-anemometer is the ideal portable product for determining air velocity and temperature levels in ducts or air supply grills. With a push of a button, FPM and Fahrenheit readings are converted to MPS and Celsius. Readings may be stored and retrieved which allows the user greater efficiency with HVAC balancing at various locations in a building.

Handheld anemometer enables measuring duct flow measurements

Handheld anemometers are an excellent, portable tool for performing tests on HVAC system performance; however, large rotating vanes can prevent easy access to ducts. Dwyer introduces the VT-300 mini-vane thermo-anemometer to eliminate this problem. Additionally, simple keypad programming enables the user to view volumetric flow rates in CFM or CMM.

Quickly measure humidity and temperature levels in ambient air

The Dwyer® Model 485B-1 thermo-hygrometer is a simple, portable device for quickly measuring humidity and temperature levels in ambient air. The dew point and wet-bulb temperature readings are derived from relative humidity and temperature measurements. The Model 485B-1 is often used in agricultural applications where proper humidity and temperature levels are critical in plant or animal well being.

AIR VELOCITY MEASUREMENT

INTRODUCTION

In air conditioning, heating and ventilating work, it is helpful to understand the techniques used to determine air velocity. In this field, air velocity (distance traveled per unit of time) is usually expressed in feet per minute (FPM). By multiplying air velocity by the cross section area of a duct, you can determine the air volume flowing past a point in the duct per unit of time. Volume flow is usually measured in cubic feet per minute (CFM).

Velocity or volume measurements can often be used with engineering handbook or design information to reveal proper or improper performance of an airflow system. The same principles used to determine velocity are also valuable in working with pneumatic conveying, flue gas flow and process gas systems. However, in these fields the common units of velocity and volume are sometimes different from those used in air conditioning work.

To move air, fans or blowers are usually used. They work by imparting motion and pressure to the air with either a screw propeller or paddle wheel action. When force or pressure from the fan blades causes the air to move, the moving air acquires a force or pressure component in its direction of motion due to its weight and inertia. Because of this, a flag or streamer will stand out in the air stream. This force is called velocity pressure. It is measured in inches of water column (w.c.) or water gage (w.g.). In operating duct systems, a second pressure is always present. It is independent of air velocity or movement. Known as static pressure, it acts equally in all directions. In air conditioning work, this pressure is also measured in inches w.c.

In pressure or supply systems, static pressure will be positive on the discharge side of the fan. In exhaust systems, a negative static pressure will exist on the inlet side of the fan. When a fan is installed midway between the inlet and discharge of a duct system, it is normal to have a negative static pressure at the fan inlet and positive static pressure at its discharge.

Total pressure is the combination of static and velocity pressures, and is expressed in the same units. It is an important and useful concept to use because it is easy to determine and, although velocity pressure is not easy to measure directly, it can be determined easily by subtracting static pressure from total pressure. This subtraction need not be done mathematically. It can be done automatically with the instrument hook-up.

SENSING STATIC PRESSURE

For most industrial and scientific applications, the only air measurements needed are those of static pressure, total pressure and temperature. With these, air velocity and volume can be quickly calculated.

To sense static pressure, six types of devices are commonly used. These are connected with tubing to a pressure indicating instrument. Figure 1-A shows a simple thru-wall static pressure tap. This is a sharp, burr-free opening through a duct wall provided with a tubing connection of some sort on the outside. The axis of the tap or opening must be perpendicular to the direction of flow. This type of tap or sensor is used where air flow is relatively slow, smooth and without turbulence. If turbulence exists, impingement, aspiration or unequal distribution of moving air at the opening can reduce the accuracy of readings significantly.

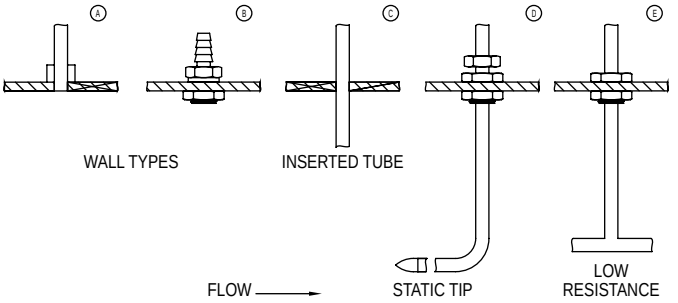

Figure 1 - Types of static pressure devices

Figure 1-B shows the Dwyer® No. A-308 Static Pressure Fitting. Designed for simplified installation, it is easy to install, inexpensive, and provides accurate static pressure sensing in smooth air at velocities up to 1500 FPM.

Figure 1-C shows a simple tube through the wall. Limitations of this type are similar to wall type Figure 1-A.

Figure 1-D shows a static pressure tip which is ideal for applications such as sensing the static pressure drop across industrial air filters and refrigerant coils. Here the probability of air turbulence requires that the pressure sensing openings be located away from the duct walls to minimize impingement and aspiration and thus ensure accurate readings. For a permanent installation of this type, the Dwyer® No. A-301 or A-302 Static Pressure Tip is used. It senses static pressure through radially-drilled holes near the tip and can be used in air flow velocities up to 12,000 FPM.

Figure 1-E shows a Dwyer® No. A-305 low resistance Static Pressure Tip. It is designed for use in dust-laden air and for rapid response applications. It is recommended where a very low actuation pressure is required for a pressure switch or indicating gage — or where response time is critical.

MEASURING TOTAL PRESSURE AND VELOCITY PRESSURE

In sensing static pressure we make every effort to eliminate the effect of air movement. To determine velocity pressure, it is necessary to determine these effects fully and accurately. This is usually done with an impact tube which faces directly into the air stream. This type of sensor is frequently called a “total pressure pick-up” since it receives the effects of both static pressure and velocity pressure.

AIR VELOCITY MEASUREMENT

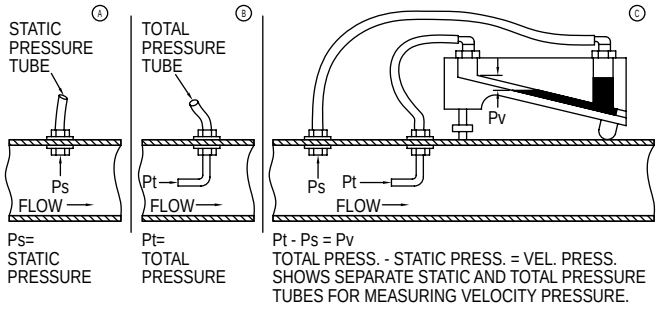

Figure 2 - Types of pressure measurements

In Figure 2, note that separate static connections (A) and total pressure connections (B) can be connected simultaneously across a manometer (C). Since the static pressure is applied to both sides of the manometer, its effect is cancelled out and the manometer indicates only the velocity pressure.

To translate velocity pressure into actual velocity requires either mathematical calculation, reference to charts or curves, or prior calibration of the manometer to directly show velocity. In practice this type of measurement is usually made with a Pitot tube which incorporates both static and total pressure sensors in a single unit.

Essentially, a Pitot tube consists of an impact tube (which receives total pressure input) fastened concentrically inside a second tube of slightly larger diameter which receives static pressure input from radial sensing holes around the tip. The air space between the inner and outer tubes permits transfer of pressure from the sensing holes to the static pressure connection at the opposite end of the Pitot tube and then, through connecting tubing, to the low or negative pressure side of a manometer. When the total pressure tube is connected to the high pressure side of the manometer, velocity pressure is indicated directly. See Figure 3.

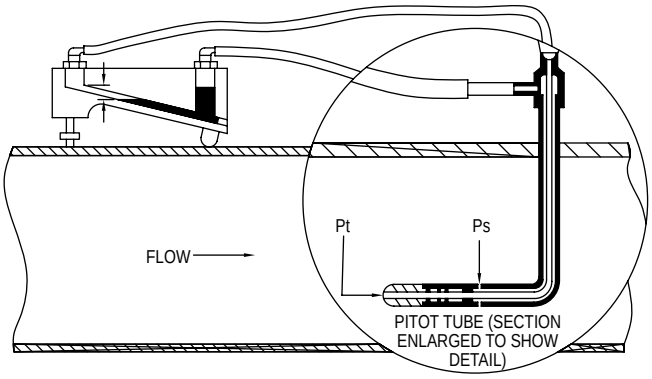

Figure 3 - Pitot tube senses total and static pressures. Manometer measures velocity pressure – (difference between total and static pressures).

Since the Pitot tube is a primary standard device used to calibrate all other air velocity measuring devices, it is important that great care be taken in its design and fabrication. In modern Pitot tubes, proper nose or tip design — along with sufficient distance between nose, static pressure taps and stem — will minimize turbulence and interference. This allows use without correction or calibration factors. All Dwyer® Pitot tubes are built to AMCA and ASHRAE standards and have unity calibration factors to assure accuracy.

To ensure accurate velocity pressure readings, the Pitot tube tip must be pointed directly into (parallel with) the air stream. As the Pitot tube tip is parallel with the static pressure outlet tube, the latter can be used as a pointer to align the tip properly. When the Pitot tube is correctly aligned, the pressure indication will be maximum.

Because accurate readings cannot be taken in a turbulent air stream, the Pitot tube should be inserted at least 8-1/2 duct diameters downstream from elbows, bends or other obstructions which cause turbulence. To ensure the most precise measurements, straightening vanes should be located 5 duct diameters upstream from the Pitot tube.

HOW TO TAKE TRAVERSE READINGS

In practical situations, the velocity of the air stream is not uniform across the cross section of a duct. Friction slows the air moving close to the walls, so the velocity is greater in the center of the duct.

To obtain the average total velocity in ducts of 4″ diameter or larger, a series of velocity pressure readings must be taken at points of equal area. A formal pattern of sensing points across the duct cross section is recommended. These are known as traverse readings. Figure 4 shows recommended Pitot tube locations for traversing round and rectangular ducts.

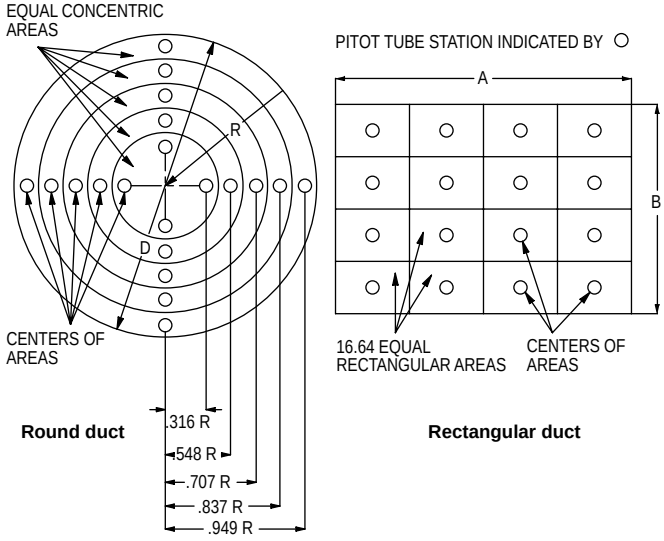

Figure 4 - Traverse on round and rectangular duct areas

In round ducts, velocity pressure readings should be taken at centers of equal concentric areas. At least 20 readings should be taken along two diameters. In rectangular ducts, a minimum of 16 and a maximum of 64 readings are taken at centers of equal rectangular areas. Actual velocities for each area are calculated from individual velocity pressure readings. This allows the readings and velocities to be inspected for errors or inconsistencies. The velocities are then averaged.

By taking Pitot tube readings with extreme care, air velocity can be determined within an accuracy of ±2%. For maximum accuracy, the following precautions should be observed:

1. Duct diameter should be at least 30 times dia. of Pitot tube.
2. Locate the Pitot tube in a duct section providing 8-1/2 or more duct diameters upstream and 1-1/2 or more diameters down stream of Pitot tube free of elbows, size changes or obstructions.
3. Provide an egg-crate type of flow straightener 5 duct diameters upstream of Pitot tube.
4. Make a complete, accurate traverse.

In small ducts or where traverse operations are otherwise impossible, an accuracy of ±5% can frequently be achieved by placing Pitot tube in center of duct. Determine velocity from the reading, then multiply by 0.9 for an approximate average.

AIR VELOCITY MEASUREMENT

CALCULATING AIR VELOCITY FROM VELOCITY PRESSURE

Manometers for use with a Pitot tube are offered in a choice of two scale types. Some are made specifically for air velocity measurement and are calibrated directly in feet per minute. They are correct for standard air conditions: i.e. air density of .075 lb per ft³ corresponds to dry air at 70°F, barometric pressure of 29.92 inches Hg. To correct the velocity reading for other than standard air conditions, the actual air density must be known. It may be calculated if relative humidity, temperature and barometric pressure are known.

Most manometer scales are calibrated in inches of water. Using readings from such an instrument, the air velocity may be calculated using the basic formula:

$$V = 1096.7\sqrt{\frac{h_v}{d}} \left\{ = 4004.4\sqrt{h_v} \text{ for .075 lb/ft}^3 \text{ dry air @ 70°F, 29.92 in. Hg Baro.} \right\}$$

Where: V = Velocity in feet per minute.
h_v = Velocity pressure in inches of water.
d = Density of air in pounds per cubic foot.

To determine dry air density, use the formula:

$$d = 1.325\ \frac{P_B}{T}$$

Where: d = Air density in pounds per cubic foot.

P_B = {Barometric (or absolute) static pressure in inches of mercury.}

T = Absolute temperature (indicated temperature in °F plus 460°).

With dry air at 29.9 inches mercury, air velocity can be read directly from curves on the following page. For partially or fully saturated air a further correction is required. To save time when converting velocity pressure into air velocity, the Dwyer® Air Velocity Calculator may be used. A simple slide rule, it provides for all the factors needed to calculate air velocity quickly and accurately. It is included as an accessory with each Dwyer® Pitot tube.

To use the Dwyer® Calculator:

1. Set relative humidity on scale provided. On scale opposite known dry bulb temperature, read correction factor.
2. Set temperature under barometric pressure scale. Read density of air over correction factor established in 1 (above) .
3. On the other side of calculator, set air density reading just obtained on the scale provided.
4. Under Pitot tube reading (velocity pressure, inches of water) read air velocity, feet per minute.

DETERMINING VOLUME FLOW

Once the average air velocity is known, the air flow rate in cubic feet per minute is easily computed using the formula:

Q= AV

Where: Q = Quantity of flow in cubic feet per minute.
A = Cross sectional area of duct in square feet.
V = Average velocity in feet per minute.

DETERMINING AIR VOLUME BY CALIBRATED RESISTANCE

Manufacturers of air filters, cooling and condenser coils and similar equipment often publish data from which approximate air flow can be determined. It is characteristic of such equipment to cause a pressure drop which varies proportionately to the square of the flow rate. Figure 5 shows a typical filter and a curve for air flow versus resistance. Since it is plotted on logarithmic paper, it appears as a straight line. On this curve, a clean filter which causes a pressure drop of .50 in w.c. would indicate a flow of 2,000 c.f.m.

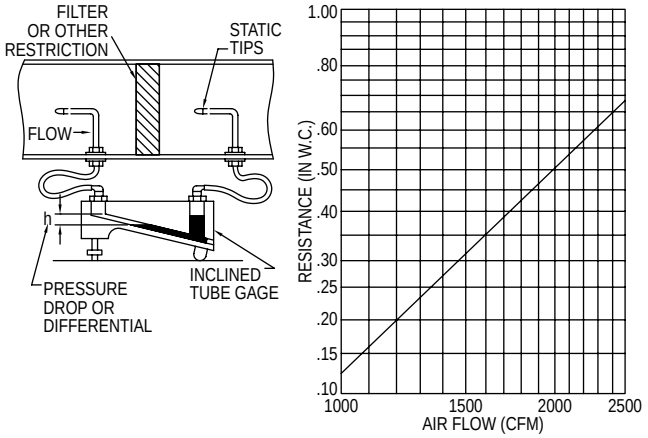

Figure 5 - Differential measurement across duct restriction

For example, assuming a manufacturer's specification for a filter, coil, etc:

Given Flow Q (ft³/min.) = at differential "h" (inches w.c.)

To determine flow at other differentials the formula is:

$$Q_n \text{ (other flows)} = Q\sqrt{\frac{h_n}{h}}$$

Where: Q = Quantity of flow in cubic feet per minute
h = Differential in inches water column
h_n = Differential (other flow conditions)

OTHER DEVICES FOR MEASURING AIR VELOCITY

A wide variety of devices are commercially available for measuring air velocities. These include hot wire anemometers for low air velocities, rotating and swinging vane anemometers and variable area flowmeters.

The Dwyer® No. 460 Air Meter is one of the most popular and economical variable area flowmeter type anemometers. Quick and easy to use, it is a portable instrument calibrated to provide a direct reading of air velocity.

A second scale is provided on the other side of the meter to read static pressure in inches w.c. The 460 Air Meter is widely used to determine air velocity and flow in ducts, and from supply and return grilles and diffusers. Two scale ranges are provided (high and low) with calibrations in both f.p.m. and in w.c.

TO CHECK ACCURACY

Use only devices of certified accuracy. All anemometers and to a lesser extent portable manometers should be checked regularly against a primary standard such as a hook gage or high quality micromanometer. If in doubt return your Dwyer® instrument to the factory for a complete calibration check at no charge.

HVAC MOBILE APPLICATION

Easily converts velocity pressure to air velocity or air velocity to air volume for most Android® or iOS devices.

FREE DOWNLOAD!
Download the phone app of our Air Velocity and Flow Calculator on our website at:
www.dwyer-inst.com/flowcalcapp/

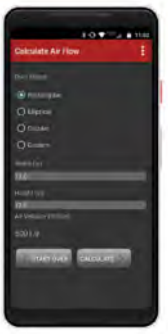

AIR VELOCITY FLOW CHARTS

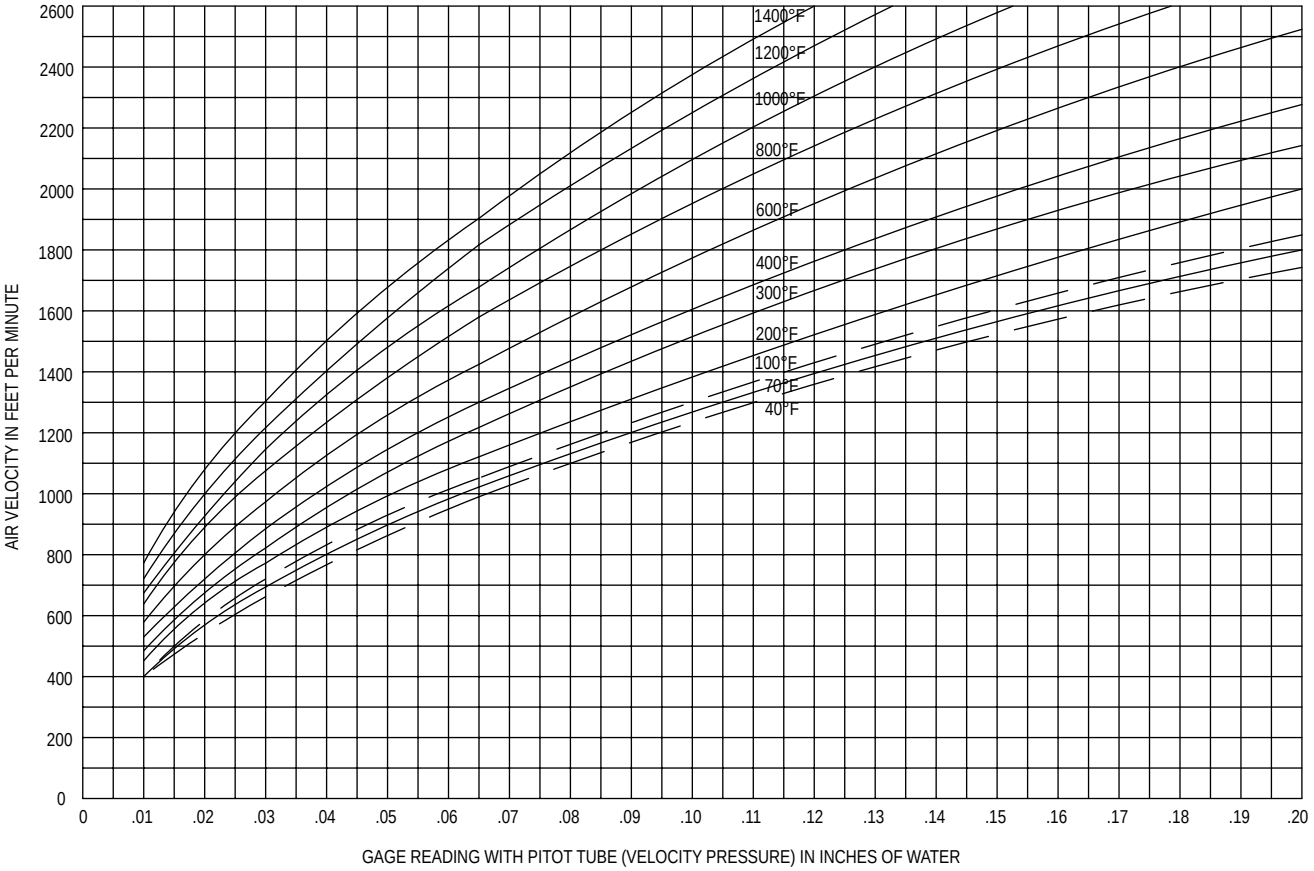

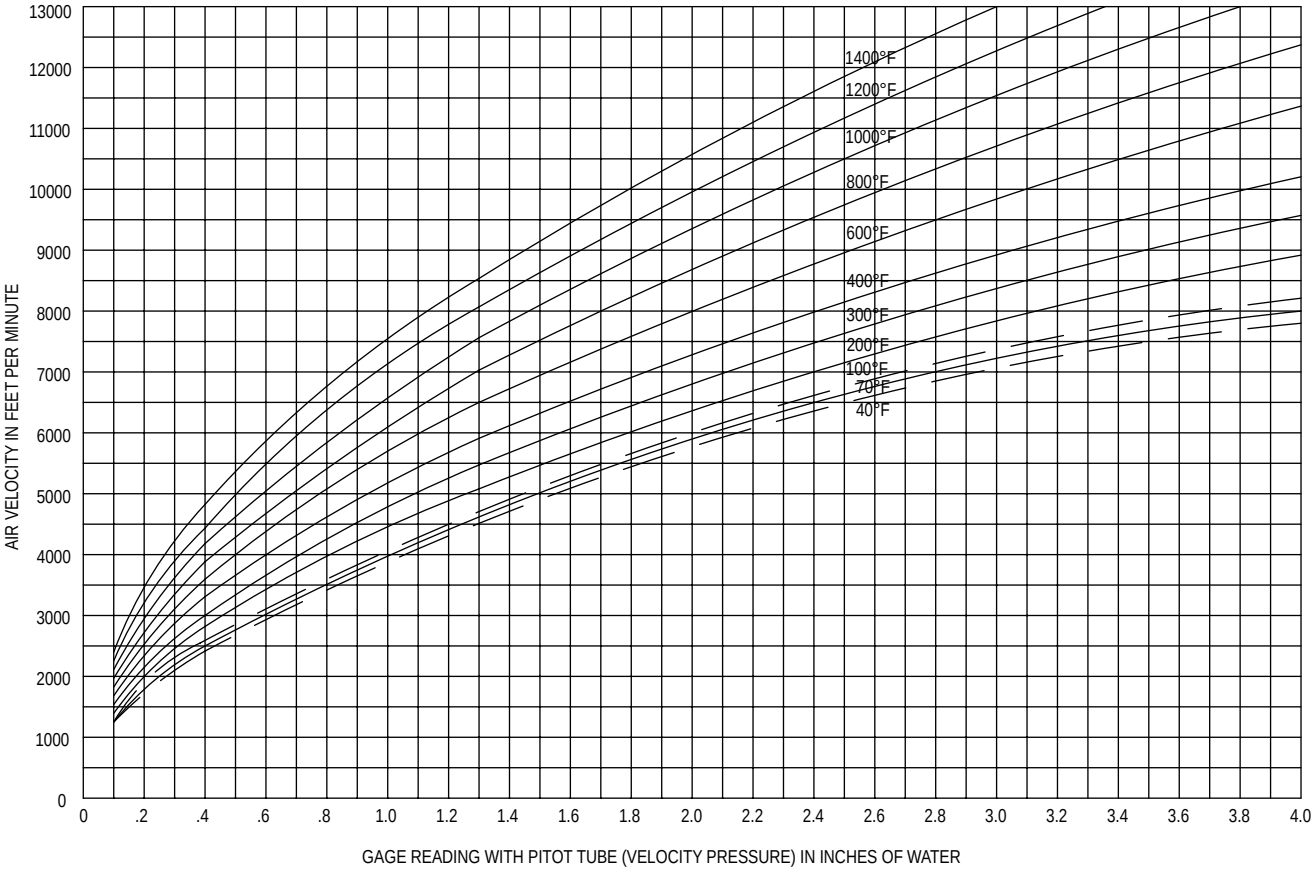

AIR BALANCING HVAC SYSTEMS

METHODS OF AIR BALANCING

Air balancing a distribution system is needed to properly direct the air flow in order to optimize the system's design. Flow rates are tested, adjusted, and balanced as cubic feet per minute (CFM) or cubic meters per hour (m^3/h). There are two traditional methods for balancing airflow at the terminals. The first is sequential balancing, which involves setting the zone and branch dampers in sequence. However, the most common method of air balancing is called proportional balancing.

For traditional proportional balancing, an air flow hood, or capture hood, is the most popular test instrument used to take air flow readings. Traverse readings in the duct with a Pitot tube or a hot-wire thermo-anemometer is another accepted method of capturing the actual air flow.

Dwyer has designed a variation of proportional balancing, which is called Predictive Balancing used in Dwyer's Series SAH SMART Air Hood® Balancing Instrument. Predictive Balancing is designed to be a faster process and give more accurate results than traditional proportional balancing.

PREDICTIVE VS PROPORTIONAL BALANCING

In traditional proportional balancing, the flow hood will directly measure volumetric air flow at the outlets or terminals of a system: the registers, grilles, and diffusers. Most air flow hoods are cone shaped and aligned to the ceiling registers as shown in Figure 1 in the left picture. When a flow hood is placed over a terminal, it will generate pressure within the duct system, which reduces the air flow to the terminal. This condition is called back pressure. The effect of back pressure can result in errors when taking readings. Before using a flow hood, many technicians recommend performing a duct traverse to verify the K factor. Some digital flow hoods include back pressure compensation that attempts to calculate the effect of backpressure for the technician.

Dwyer's Predictive Balancing technique is based on mass balance and energy conservation methods. Predictive Balancing, is a process that involves predicting the ideal flow set points for each TUA (Terminal Under Adjustment) so that every terminal is at the target flow until the process is complete. Dwyer's Series SAH SMART Air Hood® Balancing Instrument was designed with Predictive Balancing in mind. Dwyer's air hood is being used in Figure 1 in the right picture.

Predictive Balancing is deterministic and minimizes the number or process steps involved in testing, adjusting, and balancing HVAC systems. Figure 2 illustrates a comparison between Predictive Balancing and traditional proportional balancing processes, showing how much faster Predictive Balancing is.

Figure 1 – Traditional air flow hood (left picture) versus Dwyer SMART Air Hood® balancing instrument (right picture)

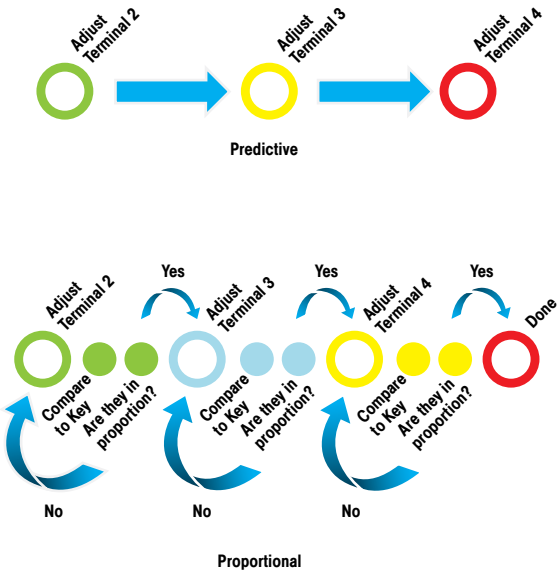

Figure 2 – Predictive vs Proportional Balancing

AIR BALANCING HVAC SYSTEMS

PROPORTIONAL BALANCING

With proportional balancing (reference Figure 3), the technician balances a terminal proportional to the key terminal. To start a proportional balance of a system, one requirement is that the system has an 80% to 120% rate to the total design flow. Systems that are higher or lower than this range will not balance properly. If the system is outside of this range, the fan speed should be adjusted to get within range. Once set, the air flow from each terminal will remain the same ratio to other terminals.

If key Terminal 1 has a design flow percent of 60%, then Terminal 2 is 57%, Terminal 3 is 65%, and the ratio to the key Terminal 1 is 57% / 60% = 0.95. Meaning Terminal 2 will deliver 95% of the air volume of Terminal 1. With Terminal 1 as the key, delivering 100% of design flow, then Terminal 2 will be delivering 95% of the design flow. This will meet the design requirements. For example, if the damper for Terminal 3 is adjusted down to 525 CFM, the flow from Terminal 1 may increase to 550 CFM. In this case, Terminal 2 is within the design range; 550 * 0.95 = 523 CFM.

Once the terminals are in balance, with the proper ratio of tolerance with each other, they remain in balance with each other even though the air volume may change. All terminals in the system are then proportionally balanced. The fan RPM can be set to deliver the intended total air volume and all terminals will deliver the design flow within the established tolerances.

This process requires the balancing technician to adjust the flow from the terminal under-adjustment (TUA) to the key to gain the correct flow proportion. The key terminal's flow changes when the TUA damper is changed. It may take several iterations to achieve the proper flow proportion.

Since the technician is estimating where to set the flow rate of the TUA relative to the key, the tolerance can vary considerably, which limits the accuracy of the balancing. The illustration in Figure 3 shows the potential number of lengthy steps involved with proportional balancing.

PREDICTIVE BALANCING

The Predictive Balancing (reference Figure 4) process begins by opening the dampers to capture the total flow. The total flow is distributed into the four terminal flows. The terminal flows are determined by the terminal and damper loads and the pressure drop in the system.

Terminal 2 is the first damper adjusted in the system, and Terminal 1 is the key. Predictive Balancing calculates the ideal flow set point for Terminal 2 for TUA and predicts flows for Terminals 1, 3, and 4.

After adjusting the Terminal 2 flow to the ideal flow set point, Predictive Balancing calculates the ideal set point for Terminal 3 and predicts the new flows for terminals 1, 2, and 4.

To finish, Predictive Balancing calculates the ideal set point for the last Terminal, number 4, and flows for Terminals 1, 2, and 3 are correctly proportioned to the target.

Finally, Predictive Balancing calculates the ideal flow for Terminal 4 so the blower flow can be adjusted to bring all the terminal flows to the target flows.

Predictive Balancing also monitors and compensates for load on the blower/fan from the damper closures during the balancing process. The illustration in Figure 4 compared to Figure 3 shows just how much easier and faster Predictive Balancing is over Proportional Balancing in the amount of steps involved in the process.

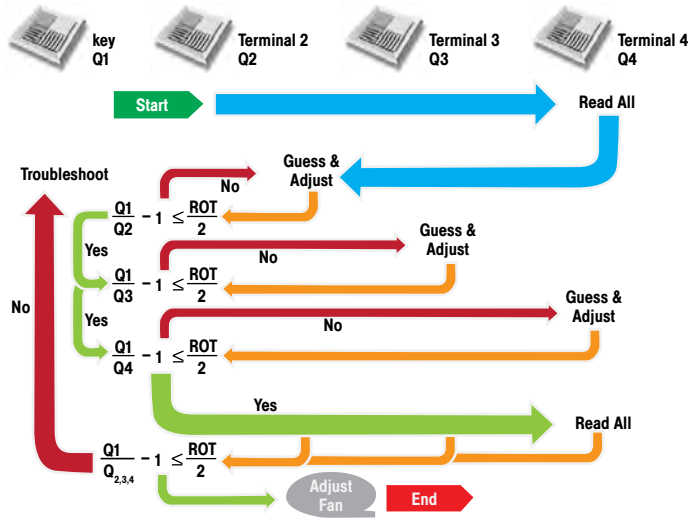

Figure 3 – Proportional balancing

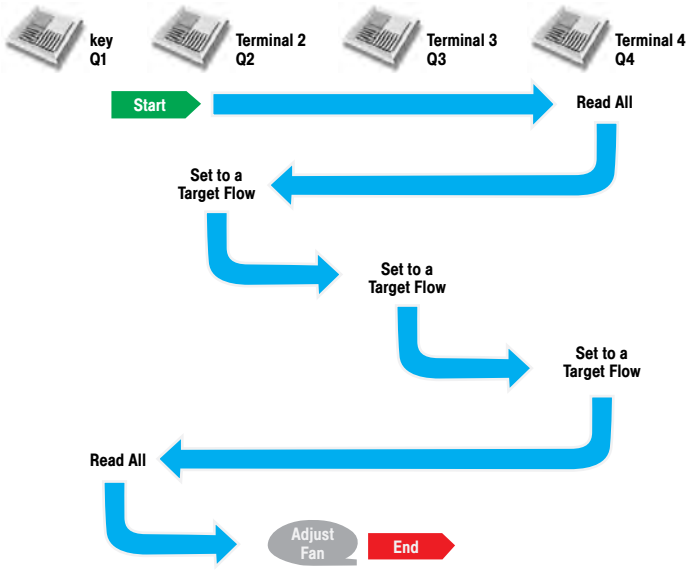

Figure 4 – Predictive balancing

Dwyer

SERIES SAH

SMART AIR HOOD® BALANCING INSTRUMENT

Quad Flow Design Technology, Predictive Balancing

CALIBRATION SERVICES AVAILABLE

DEALER DESIGN AWARDS

Optional handheld device UHH7 shown

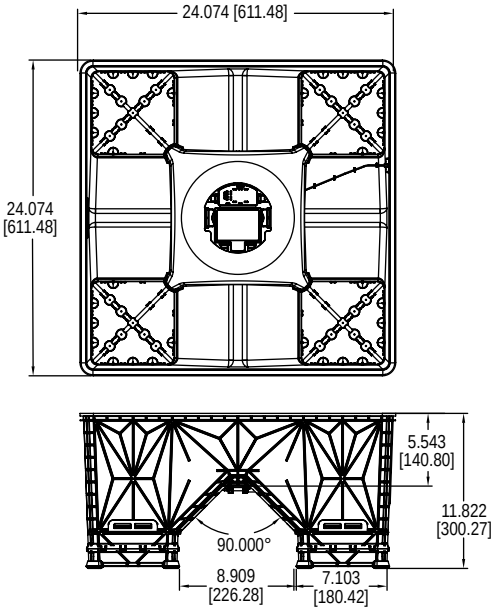

The **SMART AIR HOOD® (SAH) Balancing Instrument** is the most accurate and easy to operate air flow hood on the market today. The low profile design allows balancers to work in occupied spaces (bathroom stalls, MRI machines, cubicles, tables/chairs, etc.) and maneuver through doorways easier. By using the included 12 foot hood pole and wireless communications to a mobile device, one operator can balance a branch in less time than traditional balancing teams. Besides being lighter than most traditional capture hoods, the ergonomic design makes the technician exude less energy as the SAH has a lighter, balanced design. The rugged polypropylene base hood features Quad Flow Design Technology for controlling air flow and minimizing back pressure, which yields superior measurement accuracy. The Wi-Fi protocol back to the user's Android® or iOS® device gives the user real-time feedback, as they may be up to 200 yards (183 m) from the hood which saves the technician from unnecessarily going up and down their ladder multiple times to cut or open the dampers to balance the system.

The **SMART AIR HOOD® Application Software** reduces the number of steps in the air flow balancing process using Predictive Balancing. Predictive Balancing is a method of predicting the optimal flow set point for each register and the order in which they should be adjusted.

BENEFITS/FEATURES

- Patent pending Quad Flow Design Technology directs the circulating air patterns to provide a more even air flow that minimizes backpressure enabling accurate readings.
- Patent pending Predictive Balancing is a process that guides the balancing technician on setting the optimal flow set point for each sequential terminal. With the PredictAir™ SAH application software, the balancing process takes much less time than traditional air balancing methods.
- The ergonomic design is ¼ of the height of a traditional legacy flow hood, and is much lighter and easier to work with than the existing bulky air hoods, providing greater maneuverability and less physical strain.
- One technician can complete air balancing by themselves.
- Wi-Fi wireless communication provides a range up to 200 yards, and provides a more stable connection in environments with steel and concrete than Bluetooth® communication.
- The iOS® version of the SAH software has the capability to drag and drop into third party software in split-screen mode.
- When plugging in directly to a mobile device to the SAH, the Wi-Fi radio is deactivated.
- The hardcase (included with SAH-22HC) gives users the ability to plug in all the instruments inside the case and then externally run a cord to the case so they can charge all instruments with one cord (extension cord not included).
- For linear diffusers (1´x4´) and HEPA filters (2´x4´), optional hoods are available that are designed to be installed quickly onto the standard 2x2 low profile design.

APPLICATIONS

- Commissioning, testing, adjusting and balancing volumetric air flow from diffusers, grilles, and registers in HVAC systems

INCLUDED WITH THE SAH KITS:

- 3 ft (0.9 m) extendable pole
- 12 ft (3.7 m) extendable pole
- Mobile device quick release pole adaptor kit
- Two low flow plugs
- Softcase SAH22 or hardcase SAH-22HC with storage for additional instruments
- Lithium ion battery (not included in international versions)
- Installation and operating manual
- NIST traceable certificate
- Charging cables for SAH

SPECIFICATIONS

Service: Air.
Units: Cubic feet per minute (CFM), cubic meter per hour (M³/H), cubic meter per second (M³/S), liter per minute (l/min), liter per hour (l/hour), liter per second (l/s).
Volume Flow Ranges: Supply: 40 to 2000 CFM (68 to 3398 m3/h) (19 to 944 l/s); Exhaust: 80 to 2000 CFM (136 to 3398 m3/h) (38 to 944 l/s).
Accuracy > 40 CFM: ±3% of reading ±7 CFM (11.9 m3/hr) (3.3 l/s).
Resolution: 1 CFM (1.7 m³/h) (.5 l/s).
Power Requirements: 3.6 V NCR18650B MH12210 Li-ion rechargable battery (included), or (4) AA alkaline 1.5 V batteries (not included).
Housing Material: Polypropylene.
Weight of Hood: 5.75 lb (2.6 kg).
Supported Devices: UHH6 and newer, and smart devices with Android® firmware version 8.0 and above or iOS® version 14.1 and above.
Software: SMART Air Hood® application software, available on the Google Play™ store and the Apple App Store®.
Wireless Protocol: Wi-Fi wireless technology.
Response Time: 1 s.
Compliance: CE, FCC, IC, RCM (-AU model only).

MODEL CHART

Model	Description
SAH-22	SMART Air Hood® balancing instrument with 2´ x 2´ (0.6 m x 0.6 m) opening
SAH-22HC	SMART Air Hood® balancing instrument with 2´ x 2´ (0.6 m x 0.6 m) opening, with hard travel case

ACCESSORIES

Model	Description
A-SAH-03P	Extendable pole, 2´ to 4´ (replacement pole)
A-SAH-12P	Extendable pole 4.5´ to 12´ (replacement pole)
A-SAH-14S	Canvas hood attachment, 1´ x 4´ (0.3 m x 1.2 m), quick setup connection
A-SAH-15S	Canvas hood attachment, 1´ x 5´ (0.3 m x 1.5 m), requires A-SAH-BK
A-SAH-24S	Canvas hood attachment, 2´ x 4´ (0.6 m x 1.2 m), quick setup connection
A-SAH-33S	Canvas hood attachment, 3´ x 3´ (0.9 m x 0.9 m), requires A-SAH-BK
A-SAH-44S	Canvas hood attachment, 4´ X 4´ (1.2 m x 1.2 m), requires A-SAH-BK
A-SAH-BK	Adapter base kit for canvas hoods, required for use with A-SAH-15S, -33S and -44S
A-SAH-CK	Replacement calibration kit includes: sensor module and 4 quad flow sensing grids
A-SAH-CLIP	Pole mounting clips (2)
A-SAH-HC	Hard travel case
A-SAH-PLUG	Low flow plug
A-SAH-SC	Soft travel case
UHH7	Universal handheld test device with software

Android® is a registered trademark of Google LLC
App Store® is a trademark of Apple Inc.
Bluetooth® is a registered trademark of Bluetooth SIG, Inc.
Google Play™ is a trademark of Google LLC
iOS® is a registered trademark of Cisco Technology, Inc.

Dwyer

SERIES TABKIT

TEST, ADJUST, AND BALANCE KIT

A Complete Balancing Technician Solution

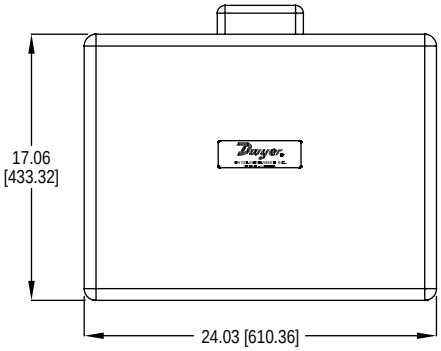

WHAT'S INCLUDED

160G

RP3-NIST

AP3-NIST

VP3-NIST

DP3-NIST

TAC-L-NIST

CM-1-NIST

490W

TM99A

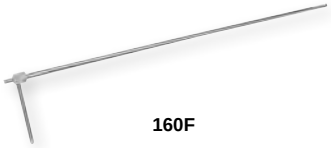

160F

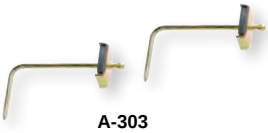

A-303

160-18

1075

The **Series TABKIT Test, Adjust, and Balance Kit** combines all essential air, water, temperature, humidity, and electrical test instruments are included in this kit, creating the ultimate air and water balancing solution. The Series TABKIT has everything a balancing technician needs in a single case. A certificate of NIST calibration is included for each instrument inside the kit, ensuring accurate, durable, repeatable, and reliable measurements every time. When the products need to be recalibrated, save time by sending everything back to Dwyer. Our lab is able to service all equipment within the kit, and ensure they're as accurate as the day you originally received them.

BENEFITS/FEATURES
- Everything a balancing technician needs in a single case
- Best in class low flow velocity readings
- Repeatable measurements

APPLICATIONS
- Building balancing
- Building commissioning
- Testing HVAC equipment performance

MODEL CHART	
Model	**Description**
TABKIT-NIST	Complete NIST calibrated test, adjust, and balance kit with hard carrying case

SPECIFICATIONS

AIR
SERIES DP3
Accuracy*: ±0.5% FS span @ 25°C (includes non linearity, hysteresis, and non repeatability).
Pressure Limits: ±10 in w.c. (±2.5 kPa).
Temperature Limits: Operating: -4 to 140°F (-20 to 60°C); Storage: -40 to 185°F (-40 to 85°C).

MODEL AP3
Range: Air velocity: 45 to 6000 FPM (0 to 30 m/s); Volumetric air: 999,999 in selected flow units; Temperature: -20 to 212°F (-29 to 100°C).
Accuracy: Air velocity*: ±3% FS within temperature range of 40 to 90°F (4 to 32°C) -TAB option: 50 to 3900 FPM (0.25 to 20 m/s); Temperature: ±0.5°F (±0.28°C).

MODEL VP3
Range: Air velocity: 40 to 5000 FPM (0.2 to 25 m/s); Volumetric air: 999,999 in selected flow units; Temperature: -20 to 212°F (-29 to 100°C); Relative humidity: 0 to 100% RH.
Accuracy: Air velocity*: 100 to 3900 FPM: ±5% of reading ±7 FPM (0.5 to 20 m/s: ±5% of reading ±0.04 m/s); Temperature: ±0.9°F @ 77°F (±0.5°C @ 25°C); Relative humidity: ±2% @ 77°F (25°C) (10 to 90% RH); ±4% (0 to 10% RH and 90 to 100% non-condensing).
Resolution: 1 FPM (0.001 m/s).

TEMPERATURE
MODEL TM99A and SERIES 1075
Range: 0 to 200°F (-20 to 100°C).
Accuracy*: ±0.5% of reading + 2.0°F (±0.5% of reading + 1.0°C).
Resolution: 0.1°F (0.1°C).

HUMIDITY
MODEL RP3
Range: RH: 0 to 100% (non-condensing); Temperature: -22 to 140°F (-30 to 60°C).
Accuracy: RH*: ±2% @ 25°C (10 to 90% RH); ±4% (0 to 10, 90 to 100% RH); Temperature: ±0.9°F @ 77°F (±0.5°C @ 25°C).

ELECTRICAL
MODEL CM-1*
AC Voltage: 0.1-600 V ± (1.0% + 5 dgt).
DC Voltage: 0.1-600 V ± (1.0% + 3 dgt).
AC Current: 0.1-400 A ± (2.0% + 10 dgt).
Resistance: 0.1-400 Ω ± (1.0% + 5 dgt).

ROTATION
MODEL TAC-L
Range: Non-contact (RPM): 2.5 to 99,999 RPM; Contact (RPM): 0.5 to 19,999 RPM; Surface speed (m/min): 0.05 to 19,999 m/min.
Resolution: Non-contact* (RPM): 0.1 RPM (2.5 to 999.9 RPM), 1 RPM (1000 to 19,000 RPM); Surface speed (m/min): 0.01 m/min (0.05 to 99.99 m/min), 0.1 m/min (100.0 to 1999.9 m/min).

HYDRONIC
A-490W-6
Range: 0.4 to 200 psi (3 to 1400 kPa); 0.4 to 75 psi (3 to 500 kPa).
Accuracy*: 2% of reading ±1 psi (2% of reading ±7 kPa); 2% of reading ±0.5 psi (2% of reading ±3.5 kPa).
Resolution: 0.1 psi (1.0 kPa); 0.01 psi (0.1 kPa).

*NIST calibrated.

Note: See website for more detailed specifications.
Note: Instruments meet or exceed NEBB requirements.

USA: California Proposition 65
⚠ **WARNING:** This product can expose you to chemicals including Lead, which is known to the State of California to cause cancer and birth defects or other reproductive harm. For more information go to www.P65Warnings.ca.gov.

Dwyer

SERIES RP3

THERMO-HYGROMETER PROBE

Wireless, Measures Humidity, Temperature, Dew Point, and Wet Bulb Temperatures

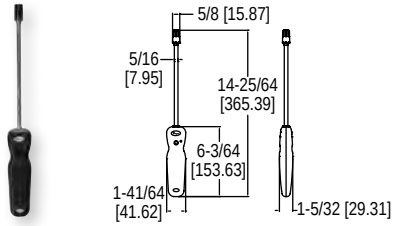

BENEFITS/FEATURES
- Allows for one handed operation for ladder use safety
- Stable 50 ft (15 m) wireless range

APPLICATIONS
- Building commissioning
- Building HVAC test and balance

MODEL CHART	
Model	**Description**
RP3	Wireless thermo-hygrometer probe for use with the Model UHH4 or newer Universal Handheld device, or personal smart device with Mobile Meter® software
RP3-NIST	Wireless Thermo-Hygrometer probe, 8″ insertion length for use with the Model UHH Universal Handheld device and the Mobile Meter® software application with NIST calibration

SPECIFICATIONS	
Service: Clean air. **Temperature Limits: Process:** -4 to 140°F (-20 to 60°C); Ambient: 5 to 125°F (-15 to 51°C); Battery charging: 32 to 113°F (0 to 45°C). **Range:** RH: 0 to 100% (non-condensing); Temperature: -22 to 140°F (-30 to 60°C). **Accuracy:** RH: ±2% @ 25°C (10 to 90% RH); ±4% (0 to 10, 90 to 100% RH); Temperature: ±0.9°F @ 77°F (±0.5°C @ 25°C). **Response Time:** 1.5 s. **Probe Length:** 8″ (203 mm) insertion. **Power Requirements:** 3.7 V YT562447 lithium ion battery, installed functional, user replaceable.	**Maximum Wireless Distance:** 50´ (15 m). **Handle Enclosure:** Thermoplastic elastomer over polycarbonate. **Supplied With:** Wrist strap. **Weight:** 11.2 oz (331.22 g). **Supported Devices:** UHH4 or newer universal handheld, and smart devices that support Bluetooth® LE (Bluetooth® Low Energy). **Supported Operating Systems:** Android® firmware version 3.X or later. **Compliance:** CE (not while charging), FCC compliant.

Android® is a registered trademark of Google LLC
Bluetooth® is a registered trademark of Bluetooth SIG, Inc.

SERIES AP3

THERMO-ANEMOMETER PROBE

Wireless, Measures Velocity, Flow, and Temperature

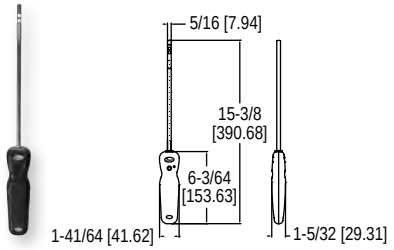

BENEFITS/FEATURES
- Allows for one handed operation for ladder use safety
- Stable 50 ft (15 m) wireless range

APPLICATIONS
- Building commissioning
- Building HVAC test and balance

SPECIFICATIONS	
Service: Dry, clean air. **Temperature Limits:** Process: -20 to 212°F (-29 to 100°C); Process temperature: -40 to 212°F (-40 to 100°C); Ambient: 5 to 125°F (-15 to 51°C). **Range:** Air velocity: 45 to 6000 FPM (0.23 to 30 m/s); Volumetric air: 999,999 in selected flow units; Temperature: -40 to 212°F (-40 to 100°C). **Accuracy:** Air velocity: ±3% FS within temperature range of 40 to 90°F (4 to 32°C); Temperature: ±0.5°F (±0.28°C) from 32 to 122°F (0 to 50°C); ±1.5°F (±0.83°C) from -40 to 32°F (-40 to 0°C) and 122 to 212°F (50 to 100°C).	**Response Time:** 1 s. **Probe Length:** 8″ (203 mm) insertion (See model chart for optional probe lengths). **Battery Charging Limits:** 32 to 113°F (0 to 45°C). **Power Requirements:** 3.7 V YT562447 Lithium ion battery. **Maximum Wireless Distance:** 50´ (15 m). **Handle Enclosure:** Thermoplastic elastomer over polycarbonate. **Supplied With:** Wrist strap. **Weight:** 11.2 oz (317 g). **Compliance:** CE (not while charging), FCC compliant.

MODEL CHART					
Model	**Probe Length**	**Model**	**Probe Length**	**Model**	**Probe Length**
AP3 **AP3-18**	8″ (203.2 mm) 18″ (457.2 mm)	**AP3-24** **AP3-36**	24″ (609.6 mm) 36″ (914.4 mm)	**AP3-NIST**	8″ (203.2 mm)

SERIES VP3

100 MM VANE THERMO-ANEMOMETER PROBE

Wireless, Measures Velocity, Flow, Humidity, and Temperature

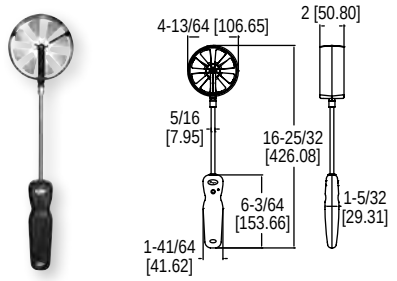

BENEFITS/FEATURES
- Allows for one handed operation for ladder use safety
- Stable 50 ft (15 m) wireless range

APPLICATIONS
- Building commissioning
- Building HVAC test and balance

MODEL CHART	
Model	**Description**
VP3	Wireless 100 mm vane thermo-anemometer probe for use with the Model UHH4 or newer universal handheld device, or personal smart device with Mobile Meter® software

SPECIFICATIONS	
Service: Clean air. **Temperature Limits:** Process: -20 to 212°F (-29 to 100°C); Ambient: 5 to 125°F (-15 to 51°C). **Range:** Air velocity: 40 to 5000 FPM (0.25 to 25 m/s); Temperature: -20 to 212°F (-29 to 100°C); Relative humidity: 0 to 100% RH; Air volume: 999,999 in selected units. **Accuracy:** Air velocity: ±1.5% of reading ±20 FPM (±0.1 m/s) [0.25 to 10 m/s]; ±1.5% of reading ±40 FPM (±0.2 m/s) [10 to 20 m/s]; ±1.5% of reading ±60 FPM (±0.3 m/s) [20 to 25 m/s]; TABKIT VP3: 100 to 3900 fpm: ±5% of reading ±7 fpm (0.5 to 20 m/s: ±5% of reading ±0.04 m/s); Temperature: ±0.9°F@77°F (±0.5°C @ 25°C); Relative humidity: ±2% @ 77°F (25°C) [10 to 90% RH]; ±4% [0 to 10, 90 to 100% RH]. **Response Time:** Air velocity: 1 s; Temperature: 1.5 s; Relative humidity: 1.5 s; Air volume: 1 s.	**Probe Length:** 8″ (203 mm) insertion. **Power Requirements:** 3.7 V YT562447 lithium ion battery, installed functional, user replaceable. **Battery Charging Limits:** 32 to 113°F (0 to 45°C). **Maximum Wireless Distance:** 50´ (15 m). **Vane Material:** Anodized aluminum. **Handle Enclosure:** Thermoplastic elastomer over polycarbonate. **Supplied With:** Wrist strap. **Weight:** 13.6 oz (402.20 g). **Supported Devices:** UHH4 or newer universal handheld, and smart devices that support Bluetooth® LE (Bluetooth® Low Energy). **Supported Operating Systems:** Android® firmware version 3.X or later. **Compliance:** CE (not while charging), FCC compliant.

Android® is a registered trademark of Google LLC
Bluetooth® is a registered trademark of Bluetooth SIG, Inc.

Dwyer
SERIES DP3

DIFFERENTIAL PRESSURE MANOMETER

Wireless, Measures Differential Pressure, Air Velocity, and Flow

CALIBRATION SERVICES AVAILABLE

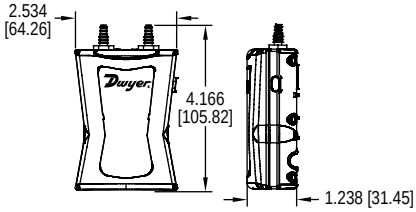

The **Series DP3 Wireless Differential Pressure Manometer** is a compact, highly accurate, auto-ranging differential pressure manometer ideal for low flow applications. The Series DP3 is used in conjunction with the Dwyer Mobile Meter® application software to view pressure drop across filters, static pressure in ducts, and velocity pressures from pitot tubes or air flow stations.

BENEFITS/FEATURES
- Auto ranging technology maintains optimal performance down to 0.1 in w.c.
- LED indicator displays manometer status, connection, charging and logging to the user
- Over-the-air updates ensure the manometer has the latest firmware
- Unit can be mounted on both the pitot and velocity grid
- Rechargeable battery allows for a 10 hour battery life
- One button design allows for easy operation and simple logging
- Rugged case allows for a 10´ drop without compromising functionality
- Automatically corrects pressure reading depending on the inclination of the manometer

APPLICATIONS
- Building commissioning
- Building HVAC test and balance
- Critical environment testing
- Industrial process verification
- Instrumentation validation

USA: California Proposition 65
⚠**WARNING:** This product can expose you to chemicals including Lead, which is known to the State of California to cause cancer and birth defects or other reproductive harm. For more information go to www.P65Warnings.ca.gov.

SPECIFICATIONS

Service: Non-corrosive dry gases.
Wetted Materials: Zinc plated brass; Silicon.
Accuracy: ±0.5% FS span @ 25°C (includes non linearity, hysteresis, and non repeatability).
Pressure Limits: ±10 in w.c. (±2.5 kPa).
Temperature Limits: Operating: -4 to 140°F (-20 to 60°C); Storage: -40 to 185°F (-40 to 85°C).
Power Requirements: 3.7 V lithium ion battery, user rechargeable.
Wireless Distance: 50´ (15 m).
Weight: 3.3 oz (93.55 g).
Electrical Connections: Female mini-USB.
Hose Connections: Two barbed connections for use with 1/8˝ (3.18 mm) or 3/16˝ (4.76 mm) ID tubing.
Compliance: CE, FCC.

MODEL CHART

Model	Range	Maximum Pressure
DP3	±10 in w.c. (±2.5 kPa)	10 psi (68.9 kPa)

OPTIONS

Model	Description
-NIST	NIST traceable calibration certificate

MOBILE METER® SOFTWARE TEST INSTRUMENT APP

Works With Most Android® Phones/Tablets, Wireless Probes

VIDEO ONLINE

DEALER DESIGN AWARDS

Touch to access parameters

Connection status

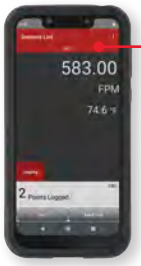

Select individual probe measurements

The **Mobile Meter® Software Test Instrument App** converts Android®-based phones and tablets into a multi-function test instrument. Wireless probes connect to the phone or tablet using a single probes parameters can be displayed as a meter or analog gage.

BENEFITS/FEATURES
- Available on Android® devices
- Data logging feature records measurements from a single probe and can email reports directly from device
- Display multiple parameters in gage or meter display

APPLICATIONS
- Building balancing
- Building commissioning
- Testing HVAC equipment performance

SPECIFICATIONS

Operating Systems: Android® firmware version 3.X or later.
Wireless Protocol: Conforms to Bluetooth SIG, Inc. low energy wireless technology.
Wireless Distance: 50´ (15 m) or greater.
Response Time: 1 s.

Android® is a registered trademark of Google LLC

TRAVERSEIT™ AIR VELOCITY MEASURING SOFTWARE APPLICATION

Includes ISO Standard Calculated Flow, Duct Traverse Procedure, Reporting

VIDEO ONLINE

AP3

The **TraverseIT™ Air Velocity Measuring Software Application** displays air flow measurements from Dwyer's Series WDPM Wireless Differential Pressure Module or Series AP3 Hot Wire Thermo-Anemometer Probe and guides balancers through the duct traverse process using step-by-step instructions. The traverse process is a method for calculating the maximum airflow in a duct. Several readings are taken across a traverse plane which are converted into velocity, and averaged. The TraverseIT™ app calculates air flow using ISO 3966 and 5801 standards, yielding highly accurate flow readings with each traverse. The application comes factory installed on a Dwyer rugged handheld unit that is included with a variety of balancing instruments or it can be downloaded directly from the Google Play™ store.

APPLICATIONS
- Commissioning, testing, adjusting and balancing volumetric air flow in HVAC systems

SPECIFICATIONS

Operating System: Android™ 4.2.2 (Jellybean or newer).*
Wireless Protocol: Bluetooth® wireless technology.
Response Time: 1 s.
*Latest updates to application can be downloaded using the Google Play™ store.

BENEFITS/FEATURES
- Step-through traverse procedure provides duct visuals for quick and proper setup
- Utilizes ISO Standards to calculate high accurate flow
- Generates and shares duct traverse reports directly from the handheld device

Android® is a registered trademark of Google LLC
Bluetooth® is a registered trademark of Bluetooth SIG, Inc.
Google Play™ is a trademark of Google LLC

Dwyer
SERIES 490W

WIRELESS HYDRONIC DIFFERENTIAL PRESSURE MANOMETER

Liquid and Gas Pressure Measurement, ±2% of Reading Accuracy

DEALER DESIGN AWARDS

Optional handheld device UHH7 shown

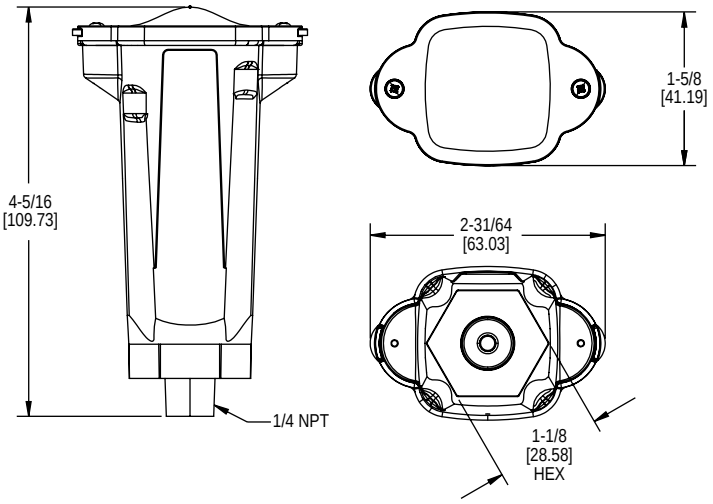

The **Series 490W Wireless Hydronic Differential Pressure Manometer** is the most accurate and easy to operate manometer on the market. By using wireless transducers and a mobile device, a single operator can monitor and balance a hydronic system in less time than traditional hydronic balancers. The Series 490W transducers connect wirelessly to a UHH6 or newer handheld device, or your own mobile device, to monitor differential pressure and flow on up to three different valves. Being wireless, there are no hoses to carry, snag on equipment or needing to be drained. The 490W utilizes Dwyer's hydronic application software that contains valve charts for numerous manufacturers, which converts differential pressure to flow directly on the screen.

BENEFITS/FEATURES

- Rugged weatherproof handheld housing withstands 1.0 meter drop test
- Wireless measurement of differential pressure, single pressure and air flow
- Bluetooth direct wireless communication provides range up to 65 ft (19.8 m)
- The ergonomic design is much lighter and easier to work with, providing greater maneuverability and quick install setup

APPLICATIONS

- Refrigerant pressure testing
- Hydronic valve balancing
- Measure pressure drop across pumps
- Measure pressure drop across chiller and coils for freeze protection

SPECIFICATIONS

Wireless Distance: Up to 65´ (19.8 m).
Service: Compatible gases and liquids.
Wetted Materials: Transducer: 316L SS.
Accuracy: 2% of reading, ±0.5 psi.
Compensated Temperature Range: 32 to 140°F (0 to 60°C).
Pressure Hysteresis: ±0.25% FS.
Pressure Range: 0 to 200 psi (0 to 1379 kPa).
Maximum Pressure: 400 psi.
Engineering Units: psi, ft w.c., in w.c., Pa, kPa, hPa, cm w.c., mm w.c.
Process Temperature Limits: -4 to 185°F (-20 to 85°C).
Resolution: 0.0001 psi.
Process Connections: Two 1/4˝ male NPT.
Power Requirements: 2x AAA batteries (each sensor), user replaceable.
Weight: Kit: 5 lb (2268 g); Sensor: 0.25 lb (113 g).
Supported Devices: UHH6 and newer, and smart devices with Bluetooth® v5.0 and Bluetooth® Low Energy (LE) wireless technology.
Supported Operating System: Android® firmware version 8.0 and above.
Compliance: CE, FCC.

MODEL CHART

Model	Description
490W-6-HKIT	Full kit with (2) each 200 psi sensors
490W-6-HKIT-NIST	Full kit with (2) each 200 psi sensors with NIST certification
490W-6-INT-NIST	International version. Full kit with (2) each 200 psi sensors with NIST certification

ACCESSORIES

Model	Description
A-HKIT-500	Pressure test plug adapter for the 490A-HKIT, 1/8˝ dia x 1-1/2˝ length (2 per kit)
A-HKIT-510	Pressure test plug adapter for the 490A-HKIT, 1/16˝ dia x 1-1/2˝ length (2 per kit)
A-HKIT-500XL	Pressure test plug adapter for the 490A-HKIT, 1/8˝ dia x 3˝ length (2 per kit)
A-490W-6	Replacement sensors, (2) each, 0-200 psi
A-490W-6-NIST	Replacement sensors, (2) each, 0-200 psi with NIST calibration
A-490W-CAPS	(2) each replacement caps for sensors
UHH7	Universal handheld test device with software

USA: California Proposition 65
⚠ **WARNING:** This product can expose you to chemicals including Lead, which is known to the State of California to cause cancer and birth defects or other reproductive harm. For more information go to www.P65Warnings.ca.gov.

Android® is a registered trademark of Google, Inc.
Bluetooth® is a registered trademark of Bluetooth SIG, Inc.

Dwyer

SERIES 490A-HKIT

HYDRONIC DIFFERENTIAL PRESSURE METER KIT

Liquid and Gas Pressure Measurement, ±0.5% FS Accuracy

CALIBRATION SERVICES AVAILABLE

DEALER DESIGN AWARDS

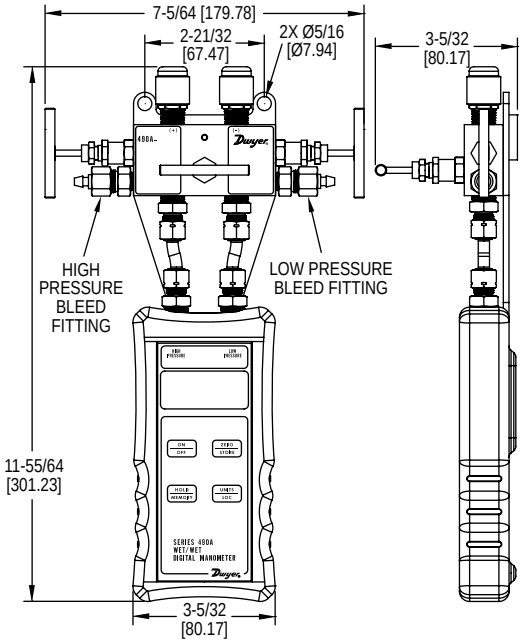

The **Series 490A-HKIT Hydronic Differential Pressure Meter Kit** features the 490A Hydronic Differential Pressure Manometer and all the necessary attachments and accessories to meet all your balancing, measuring, and pressure needs. The manometer featured in this kit is a versatile, handheld, battery operated manometer available in several ranges for positive or positive differential pressure measurement and can tolerate most liquid media compatible with 316L SS.

BENEFITS/FEATURES

- Digital dampening for low pressure stability
- Automatic resolution adjustment for finer control
- Hard carrying case protects products
- Stores up to 40 readings for later recall
- Backlight for use in dim areas
- Magnetic back mount for ease of use
- Rubber boot for easy handling and all day comfort

APPLICATIONS

- Chiller to coils for freeze protection
- Hydronic valve balancing
- Measure pressure drop across pumps
- Refrigerant pressure testing

STANDARD KIT INCLUDES:

Two (2) 6 ft high pressure rated tubing with shut off valves
One (1) high pressure 3-way valve
Two (2) controlled bleed valves
One (1) 8 ft poly tubing for purges
One (1) hard traveling lockable case with non-absorbent foam
One (1) handheld carrying strap
Two (2) 1/16″x 1-1/2″pressure gage adapters
Two (2) 1/8″x 3″pressure gage adapters
Two (2) 1/8″x 1-1/2″pressure gage adapters
Two (2) Male 90° flare to 1/4″NPT fittings
Two (2) Male flare to 1/4″ NPT coupler fittings
One (1) adjustable 8″ wrench
PTFE thread tape
One (1) magnetic protective rubber boot
NIST calibration certificate standard

A-47X-BOOT (manometer not included)

SPECIFICATIONS

Service: Compatible gases and liquids.
Wetted Materials: 316L SS, PTFE, Brass, Copper.
Accuracy: ±0.5% FS, 60 to 78°F (15.6 to 25.6°C); ±1.5% FS from 32 to 60°F and 78 to 104°F (0 to 15.6°C and 25.6 to 40°C).
Pressure Hysteresis: ±0.1% FS.
Pressure Limits: See chart.
Electronic Temperature Limits: 32 to 140°F (0 to 60°C).
Process Temperature Limits: -20 to 180°F.
Storage Temperature Limits: -4 to 176°F (-20 to 80°C).
Display: 0.42″(10.6 mm) 4 digit LCD.
Resolution: See chart.
Power Requirements: 9 V alkaline battery, installed non-functional, user replaceable.
Process Connections: Two male 45 Flare 1/4″.
Weight: 3.6 lb.
Compliance: CE.

MODEL CHART

Model	Range (psi)	Available Pressure Units and Resolution**								Maximum Pressure
		bar	psi	in Hg	kPa	in w.c.	mm Hg	mbar	ft w.c.	
490A-1-HKIT	0 to 15	1.034	15.00	30.54	103.4	415.2	775.7	1034	34.60	30 psig
490A-2-HKIT	0 to 30	2.069	30.00	61.08	206.9	830.4	1551	2069	69.20	60 psig
490A-3-HKIT	0 to 50	3.447	50.00	101.8	344.7	1384	2585	3447	115.3	100 psig
490A-4-HKIT	0 to 100	6.895	100.0	203.6	689.5	2768	5171	6895	230.7	200 psig
490A-5-HKIT	0 to 500	34.47	500.0	1018	3447	9999*	9999*	9999*	1153	1000 psig
490A-6-HKIT	0 to 200	13.79	200.0	407.2	1379	5536	9999*	9999*	461.3	400 psig

*Digits will display smaller units until all 4 digits are exceeded.
**Readings less than 10% of range will provide one additional decimal place than shown for higher resolution.

ACCESSORIES

Model	Description
A-47X-BOOT	Rubber boot for manometers (manometer no included)
A-HKIT-500	Piercing gage adaptor for the 490A-HKIT, 1/8″ dia x 1-1/2″ length (2 per kit)
A-HKIT-500XL	Piercing gage adaptor for the 490A-HKIT, 1/8″ dia x 3″ length (2 per kit)
A-HKIT-510	Piercing gage adaptor for the 490A-HKIT, 1/16″ dia x 1-1/2″ length (2 per kit)
A-HKIT-AFIT	Adaptor fitting kit for the 490A-HKIT, includes pairs of SAE 1/4″ adapters and elbow fittings
A-HKIT-BFIT	Adaptor fitting kit for the 490A-HKIT, includes pair of bleed fitting assemblies
A-HKIT-HOSES	One pair red and blue 60″ SAE replacement hoses for the 490A-HKIT, each with integral ball valve
NIST Calibration	Please contact your regional Dwyer distributor or Dwyer international sales office for scheduling your NIST recertification

USA: California Proposition 65
WARNING: This product can expose you to chemicals including Lead, which is known to the State of California to cause cancer and birth defects or other reproductive harm. For more information go to www.P65Warnings.ca.gov.

Dwyer

MODEL 160G

AVERAGING AIR FLOW GRID

Extends Over 50″ to Aid in Air Flow Output Checks

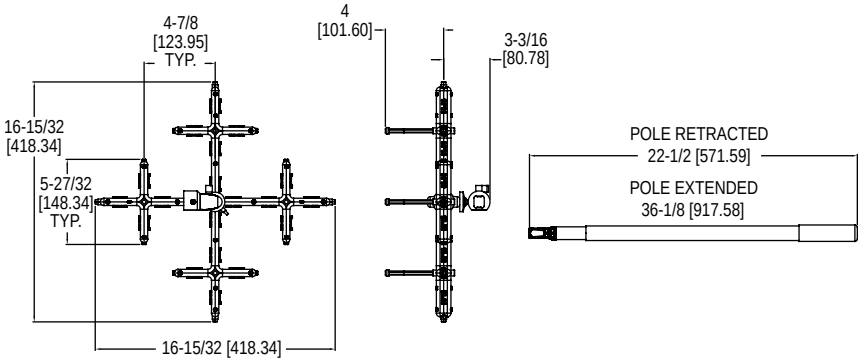

The **Model 160G Averaging Air Flow Grid** utilizes 16 sensing points to provide precision sensing across its 16.5″ (41.9 cm) length and width. The ball pivot joint and tightening nut allows the user to position the sensing grid at any angle in any direction for ease of use in hard to reach locations. The included color coded tubing connects to the integral barbed fittings, providing a differential pressure signal to a gage or manometer where the readings can be converted into a velocity or flow reading.

BENEFITS/FEATURES
- Maximum reach of approximately 48″ (122 cm)
- 16 sensing points provide an accurate average flow

APPLICATIONS
- Measure face air velocity on grills, diffusers, registers, exhaust hoods

MODEL CHART	
Model	**Description**
160G	Averaging air flow grid

SPECIFICATIONS	
Service: Air or compatible gases. **Wetted Materials:** Grid: Black polycarbonate; Ball pivot joint: AL, plastic; Handle: Aluminum; Standoffs: Aluminum with rubber bumpers, two sets: 1.25″ (31.7 mm) and 2″ (50.8 mm), 1/8″ ID / 1/4″ OD; Tubing: Two 10′ (3 m) lengths of silicone rubber. **Accuracy:** ±2% FS.	**Temperature Limits:** -40 to 257°F (-40 to 125°C). **K Factor:** 0.84. **Range:** 1000 to 5000 FPM (5 to 25 m/s). **Process Connection:** 1/8 to 1/4″ ID tubing. **Weight:** 1.75 lb (0.79 kg). **Compliance:** RoHS.

ACCESSORIES	
Model	**Description**
UHH-C2	Protective hard case

UHH-C2

MODEL 485B

THERMO-HYGROMETER

Measures % RH, Temperature, Dew Point and Wet Bulb

CALIBRATION SERVICES AVAILABLE

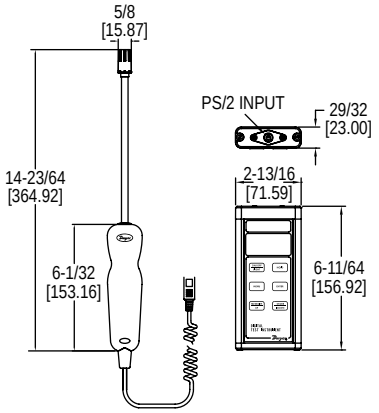

The **Model 485B Thermo-Hygrometer** is a versatile, compact, handheld instrument for measuring percentage of relative humidity and temperature in °F or °C. Dew point and wet bulb temperatures are derived from the relative humidity and temperature measurements and are displayed on the LCD.

BENEFITS/FEATURES
- Compatible with Dwyer AP1 thermo-anemometer and VP1 100 mm vane thermo-anemometer probes (sold separately)
- Hold feature to freeze current readings on the display
- Stores up to 99 readings for future evaluation

APPLICATIONS
- Building commissioning
- Pulp and paper

MODEL CHART	
Model	**Description**
485B-1	Digital thermo-hygrometer includes 9 V battery, sensing probe, wrist strap, hard carrying case and instructions

OPTIONS	
Use order code:	**Description**
-NIST	NIST traceable calibration certificate

SPECIFICATIONS
Service: Humidity, temperature, wet bulb and dew point temperature detection in clean air. **Temperature Limits:** Process: -40 to 176°F (-40 to 80°C); Ambient: 5 to 125°F (-15 to 51°C). **Relative Humidity Range:** 0 to 100% (non-condensing). **Relative Humidity Accuracy:** ±2% FS over 10 to 90% @ 77°F (25°C). **Temperature Range:** -20 to 140°F (-28 to 60°C). **Temperature Accuracy:** ±0.9°F @ 77°F (±0.5°C @ 25°C). **Display:** 4.5 digit LCD. **Resolution:** 0.1%, 0.1°F/°C. **Probe Length:** 8″ (203 mm) insertion. **Power Requirements:** 9 V alkaline battery, included, user replaceable. **Weight:** 16 oz (454 g). **Compliance:** CE.

ACCESSORIES	
Model	**Description**
A-47X-BOOT	Protective magnetic rubber boot
RP1	Thermo-hygrometer % RH and temperature probe with coiled cable

Dwyer

MODEL 471B

THERMO-ANEMOMETER TEST INSTRUMENT

Measures Air Velocity or Air Volume and Temperature Simultaneously

CALIBRATION SERVICES AVAILABLE

New six button operation provides quick access to enhanced features

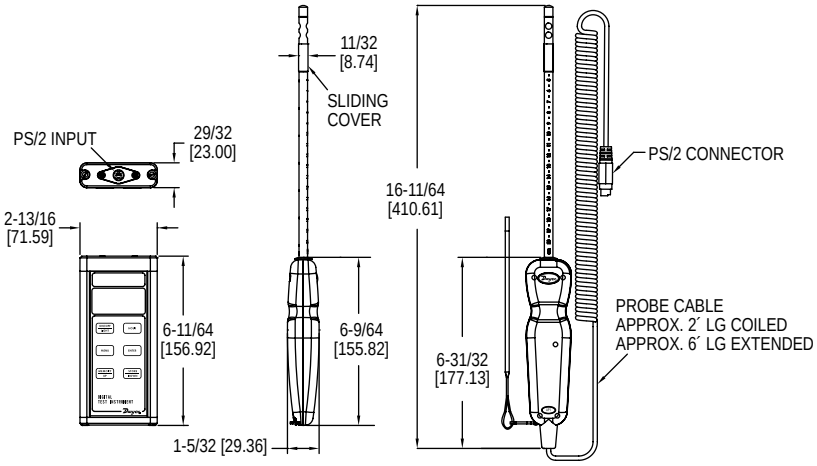

The **Model 471B Thermo-Anemometer Test Instrument** is a versatile dual function unit that quickly and easily measures air velocity or volumetric flow as well as air temperature in imperial or metric units. A stainless steel probe is included, which has a comfortable hand grip and etched insertion depth marks. The extruded aluminum housing fully protects electronics, yet is lightweight and comfortable to hold.

BENEFITS/FEATURES

- Compatible with Dwyer RP1 thermo-hygrometer and VP1 100 mm vane thermo-anemometer probes (sold separately)
- Visible in any condition due to high contrast and backlit LCD display
- Able to store up to 99 readings
- Probe sensors are protected by the integral sliding cover
- Built-in volumetric air flow calculations

APPLICATIONS

- Duct traverses
- HVAC inspections
- Testing and balancing

SPECIFICATIONS

Service: Air velocity and temperature of clean, dry air.
Temperature Limits: Process air velocity: -20 to 212°F (-29 to 100°C); Process temperature: -40 to 212°F (-40 to 100°C); Ambient: 5 to 125°F (-15 to 51°C).
Display: 4.5 digit LCD.
Resolution: 0.1%, 0.1°F/°C.
Air Velocity Range: 45 to 6000 FPM (0.23 to 30 m/s).
Air Velocity Accuracy: ±3% FS within temperature range of 40 to 90°F (4 to 32°C).
Volumetric Air Flow Range: 19,999 in selected flow units.
Temperature Range: -40 to 212°F (-40 to 100°C).
Temperature Accuracy: ±0.5°F (±0.28°C) from 32 to 122°F (0 to 50°C); ±1.5°F (±0.83°C) from -40 to 32°F (-40 to 0°C) & 122 to 212°F (50 to 100°C).
Probe Length: 8˝ (203 mm) insertion.
Cable Length: 28˝ (71 cm) retracted, 6 ft (183 cm) extended.
Power Requirements: 9 V alkaline battery, installed non-functional, user replaceable.
Weight: 16 oz (454 g).
Compliance: CE.

MODEL CHART

Model	Description
471B-1	Digital thermo anemometer includes 9 V battery, sensing probe, wrist strap, hard carrying case and instructions

OPTIONS

Model	Description
-NIST	NIST traceable calibration certificate

ACCESSORIES - PROBES

Model	Probe Length	Description
AP1	8˝	Thermo anemometer air velocity and temperature probe with coiled cable
AP1-18	18˝	Thermo anemometer air velocity and temperature probe with coiled cable
AP1-24	24˝	Thermo anemometer air velocity and temperature probe with coiled cable
AP1-36	36˝	Thermo anemometer air velocity and temperature probe with coiled cable

Replaceable probe with secure 6 pin adaptor

A-47X-BOOT (manometer not included)

ACCESSORIES - CASES

Model	Description
A-160-CASE	Hard carrying case for longer probes (18˝ to 36˝)
A-47X-BOOT	Protective magnetic rubber boot

Dwyer

MODEL 473B

100 MM VANE THERMO-ANEMOMETER TEST INSTRUMENT

Measures Air Velocity or Air Volume, Temperature, and Humidity Simultaneously

CALIBRATION SERVICES AVAILABLE

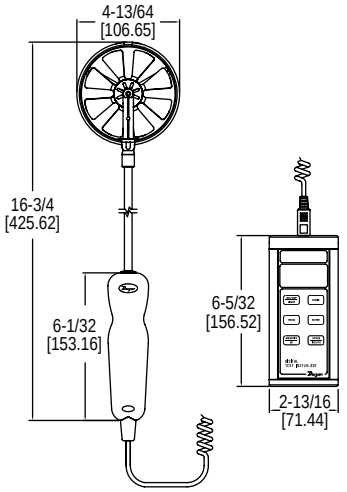

The **Model 473B 100 mm Vane Thermo-Anemometer Test Instrument** is a versatile unit that quickly and easily measures air velocity or volumetric air flow, as well as air temperature and humidity in imperial or metric units. A stainless steel 100 mm vane probe is included, which has a comfortable hand grip. The extruded aluminum housing fully protects electronics, yet is lightweight and comfortable to hold.

BENEFITS/FEATURES

- Compatible with Dwyer AP1 thermo-anemometer and RP1 thermo-hygrometer wired probes (sold separately)
- Measure air velocity, volumetric air flow, temperature, and humidity with the included 100 mm vane probe
- Visible in any condition due to high contrast and backlit LCD display
- Able to store up to 99 readings for later evaluation

APPLICATIONS

- Residential balancing
- HVAC inspections

MODEL CHART	
Model	**Description**
473B-1	Vane thermo-anemometer test instrument

OPTIONS	
To order add suffix:	**Description**
-COC	Certificate of calibration
-FC	Factory calibration certificate
-NIST	NIST traceable calibration certificate
Example: 473B-1-NIST	

SPECIFICATIONS

Service: Dry, clean air.
Temperature Limits: Process: -20 to 212°F (-29 to 100°C); Ambient: 5 to 125°F (-15 to 51°C).
Display: 4.5 digit backlit display.
Range: Air velocity: 40 to 5000 FPM (0.2 to 25 m/s); Volumetric air flow: 19,999 in selected flow units; Temperature: -20 to 212°F (-29 to 100°C); Relative humidity: 0 to 100% RH.
Accuracy: Air velocity: ±1.5% of reading ±20 FPM (±0.1 m/s) [0.25 to 10 m/s]; ±1.5% of reading ±40 FPM (±0.2 m/s) [10 to 20 m/s]; ±1.5% of reading ±60 FPM (±0.3 m/s) [20 to 25 m/s]; Temperature: ±0.9°F @ 77°F (±0.5°C @ 25°C); Relative humidity: ±2% @ 77°F (25°C) [10 to 90% RH]; ±4% [0 to 10, 90 to 100% RH].
Response Time: Air velocity: 1 s; Volumetric air flow: 1 s; Temperature: 1.5 s; Relative humidity: 1.5 s.
Probe Length: 8″ (203 mm) insertion.
Cable Length: 28″ (71 cm) retracted; 6′ (18.3 m) extended.
Vane Material: Anodized aluminum.
Power Requirements: 9 V alkaline battery, installed non-functional, user replaceable.
Weight: 18.4 oz (521 g).

ACCESSORIES	
Model	**Description**
A-47X-BOOT	Protective magnetic rubber boot
A-VPX-CKIT	Vane hood kit
AP1*	Hot wire thermo-anemometer probe with coiled cable
RP1*	Thermo-hygrometer probe with coiled cable
VP1*	100 mm vane thermo-anemometer probe with coiled cable (replacement)
*Consult website for more details.	

A-47X-BOOT
(manometer not included)

A-VPX-CKIT

AP1

RP1

VP1

Dwyer

SERIES 477AV

HANDHELD DIGITAL MANOMETER

Measures Pressure, Flow and Velocity; ±0.5% Accuracy

CALIBRATION SERVICES AVAILABLE

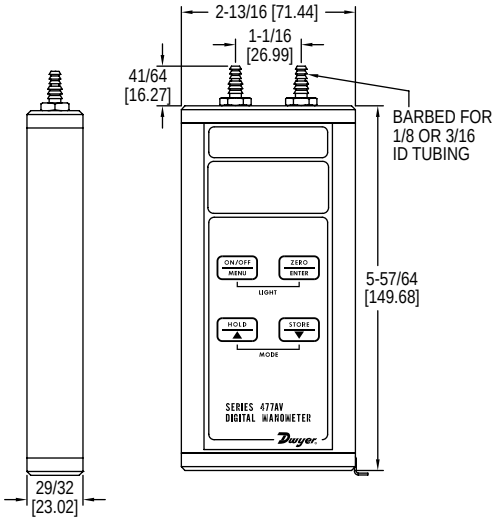

The **Series 477AV Handheld Digital Manometer** is now available with pressure, flow, and velocity measurements along with a number of other convenient features. The built-in air velocity and flow calculations provide accuracy and conserve time and error associated with manual calculations. Also featured on this unit are adjustable zero and span values for calibrating in the field, as well as a damping feature to compensate for the fluctuating of readings.

BENEFITS/FEATURES

- Calculates and displays air velocity and volumetric air flow
- Rugged aluminum case protects instrument from damage during transport/use
- 9 selectable English and metric engineering units
- Large, easy to read display with backlight for use in dark areas
- Stores up to 40 readings with minimum, maximum, and average statistics
- Convenient all-in-one air velocity kit option available

APPLICATIONS

- Air flow monitoring, when used with a Dwyer® pitot tube
- Duct static pressure
- Commercial air balancing
- Building-zone pressure

SPECIFICATIONS

Service: Air and compatible gases.
Wetted Materials: Consult factory.
Accuracy: ±0.5% FS, 60 to 78°F (15.6 to 25.6°C); ±1.5% FS from 32 to 60°F and 78 to 104°F (0 to 15.6°C and 25.6 to 40.0°C).
Pressure Hysteresis: ±0.1% FS.
Pressure Limits: See chart.
Temperature Limits: 0 to 140°F (-17.8 to 60°C).
Compensated Temperature Limits: 32 to 104°F (0 to 40°C).
Storage Temperature Limits: -4 to 176°F (-20 to 80°C).
Display: 0.42″ (10.6 mm) 4 digit LCD.
Resolution: See chart.
Units of Pressure: in w.c., ft w.c., in Hg, psi, oz/in^2, mm w.c., cm w.c., mm Hg, mbar, Pa, kPa, hPa.
Units of Velocity: fpm, fps, mph, m/h, m/s, k/h, knot.
Units of Flow: cfm, m^3/h, m^3/s.
Power Requirements: 9 V alkaline battery, installed non-functional, user replaceable.
Process Connections: Two barbed connections for use with 1/8″ (3.18 mm) or 3/16″ (4.76 mm) ID tubing. Two compression fittings for use with 1/8″ (3.18 mm) ID x 1/4″ (6.35 mm) OD tubing for 477AV-7 and 477AV-8 only.
Weight: 10.2 oz (289 g).
Compliance: CE.

MODEL CHART

Model	Pressure Range	Velocity Range fpm	Velocity Range m/s	Available Pressure Units psi	in Hg	kPa	in w.c.	mm Hg	mbar	mm w.c.	Pa	ft w.c.	oz/in^2	hPa	cm w.c.	Maximum Pressure
477AV-000	0 to 1.000 in w.c.	4004	20.34	-	0.0736	0.2491	1.000	1.868	2.491	25.40	249.1	0.0833	0.5780	2.491	2.540	5 psig
477AV-00	0 to 4.000 in w.c.	8009	40.69	0.1445	0.2942	0.996	4.000	7.473	9.96	101.6	996	0.3333	2.312	9.964	10.16	5 psig
477AV-0	0 to 10.00 in w.c.	12.66k	64.33	0.3613	0.7355	2.491	10.00	18.68	24.91	254.0	2491	0.8333	5.780	24.91	25.40	5 psig
477AV-1	0 to 20.00 in w.c.	17.91k	90.97	0.7225	1.471	4.982	20.00	37.36	49.82	508.0	4982	1.667	11.56	49.82	50.80	10 psig
477AV-2	0 to 40.00 in w.c.	25.33k	128.7	1.445	2.942	9.96	40.00	74.73	99.6	1016	9964	3.333	23.12	99.64	101.6	10 psig
477AV-3	0 to 200.0 in w.c.	56.63k	287.7	7.225	14.71	49.82	200.0	373.6	498.2	5080	-	16.67	115.6	498.2	508.0	30 psig
477AV-4	0 to 10.00 psi	66.62k	338.4	10.00	20.36	68.95	276.8	517.1	689.5	7031	-	13.07	160.0	689.5	703.1	30 psig
477AV-5	0 to 20.00 psi	94.22k	478.6	20.00	40.72	137.9	553.6	1034	1379	-	-	46.13	320.0	1379	1406	60 psig
477AV-6	0 to 30.00 psi	115.4k	586.2	30.00	61.08	206.9	830.4	1551	2069	-	-	69.20	480.0	2068	2109	60 psig
477AV-7	0 to 100.0 psi	210.7k	1070	100.0	203.6	689.5	2768	5171	6895	-	-	230.7	1600	6895	7031	150 psig
477AV-8	0 to 150.0 psi	258.0k	1311	150.0	305.4	1034	4152	7757	-	-	-	346.0	2400	-	-	200 psig

OPTIONS

To order add suffix:	Description
-NIST	NIST traceable calibration certificate
Example: 477AV-1-NIST	

ACCESSORIES

Model	Description
A-47X-BOOT	Protective magnetic rubber boot
A-402A	Carrying case; tough gray nylon pouch protects any Series 477AV Manometer; double zippered for quick and easy access, with a belt loop that snaps closed; 7-1/2″H x 3″W x 2-1/4″D (191 x 76 x 57 mm)

A-402A

A-47X-BOOT
(manometer not included)

Dwyer
SERIES 475

INTRINSICALLY SAFE HANDHELD DIGITAL MANOMETER

Ranges from 1 in w.c. to 150 psid, ±0.5% Accuracy

CALIBRATION SERVICES AVAILABLE

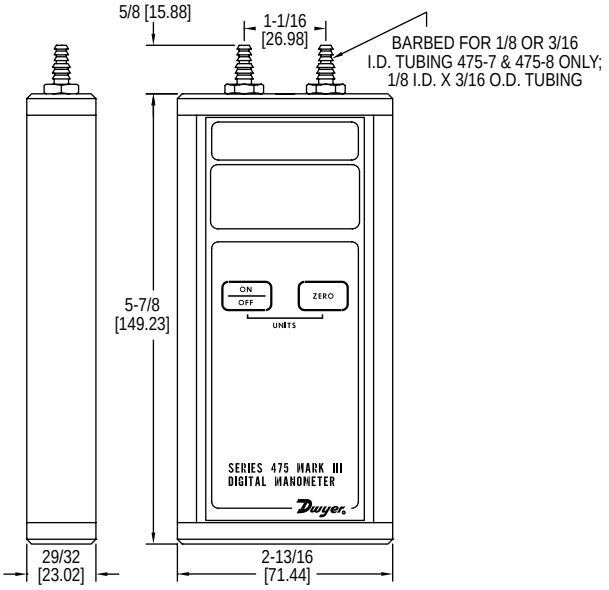

The **Series 475 Intrinsically Safe Handheld Digital Manometer** measures positive, negative, or differential pressures of air and natural gases in ranges from 1 in w.c. (0.249 kPa) to 150 psid (10.34 bar). The dual push pads on the front panel control the on/off, auto zero, and pressure unit selection, allowing for simple operation with no set up needed. When used with a Dwyer® Pitot tube (❶), the Series 475 can also be used as an air velocity gage.

BENEFITS/FEATURES

- Rugged aluminum case protects instrument from damage during transport/use
- Large, easy to read LCD and simple operation
- FM approved to be intrinsically safe in hazardous locations, Class 1, Div 2, Groups A, B, C, D, T4 Ta = 70°C

APPLICATIONS

- Monitoring natural gas pressures on boilers and other combustion equipment
- Air velocity monitoring, when used with a Dwyer® Pitot tube (❶) and AV calculator
- Field calibration of other instruments
- Monitoring or troubleshooting HVAC systems

MODEL CHART

Model	English Range	Metric Range	Maximum Pressure
475-000-FM	0 to 1.000 in w.c.	.2491 kPa	5 psig
475-00-FM	0 to 4.000 in w.c.	0.996 kPa	5 psig
475-0-FM	0 to 10.00 in w.c.	2.491 kPa	5 psig
475-1-FM	0 to 20.00 in w.c.	4.982 kPa	10 psig
475-2-FM	0 to 40.00 in w.c.	9.96 kPa	10 psig
475-3-FM	0 to 200.0 in w.c.	49.82 kPa	30 psig
475-4-FM	0 to 10.00 psi	.6895 bar	30 psig
475-5-FM	0 to 20.00 psi	1.379 bar	60 psig
475-6-FM	0 to 30.00 psi	2.069 bar	60 psig
475-7-FM	0 to 100.0 psi	6.895 bar	150 psig
475-8-FM	0 to 150.0 psi	10.34 bar	200 psig

OPTIONS

To order add suffix:	Description
-AV	Air velocity kit, includes the Series 475 manometer, two A-303 static pressure tips two 9´ lengths 3/16˝ ID rubber tubing, no. 166-6-CF pitot tube, A-397 step drill, A-532 air velocity slide chart and instruction bulletin H-11, all packed in a tough, molded plastic carrying case with die cut foam liner.
-NIST	NIST traceable calibration certificate
Example: 475-1-AV	

SPECIFICATIONS

Service: Air and compatible combustible gases.
Wetted Materials: Consult factory.
Accuracy: ±0.5% FS, 60 to 78°F (15.6 to 25.6°C); ±1.5% FS from 32 to 60°F and 78 to 104°F (0 to 15.6°C and 25.6 to 40°C).
Pressure Hysteresis: ±0.1% FS.
Pressure Limits: See chart.
Temperature Limits: 0 to 140°F (-17.8 to 60°C).
Compensated Temperature Limits: 32 to 104°F (0 to 40°C).
Storage Temperature Limits: -4 to 176°F (-20 to 80°C).
Display: 0.42˝ (10.6 mm) 4 digit LCD.
Resolution: See chart.
Power Requirements: 9 V alkaline battery, installed non-functional, user replaceable.
Process Connections: Two barbed connections for use with 1/8˝ (3.18 mm) or 3/16˝ (4.76 mm) ID tubing. Two compression fittings for use with 1/8˝ (3.18 mm) ID x 1/4˝ (6.35 mm) OD tubing for 475-7 & 475-8 only.
Weight: 10.8 oz (306 g).
Compliance: CE, FM approved to Class I, Div 2, Groups A, B, C, D, T4 Ta = 70°C.

ACCESSORIES

Model	Description
A-402A	Carrying case, tough gray nylon pouch protects any Series 475 manometer, double zippered for quick and easy access, belt loop that snaps closed, 7-1/2˝H x 3˝W x 2-1/4˝D (191 x 76 x 57 mm)
A-47X-BOOT	Protective magnetic rubber boot

A-402A

-AV option
475-AV air velocity kit

A-47X-BOOT
(manometer not included)

❶Pitot tube: See pages 201-234 (Air Quality section)
Process Tubing Options: See page 453 (Gage Tubing Accessories)

Dwyer

SERIES 476A & 478A

SINGLE PRESSURE AND DIFFERENTIAL PRESSURE DIGITAL MANOMETERS

Electronic Zeroing, ±1.5% Accuracy

CALIBRATION SERVICES AVAILABLE

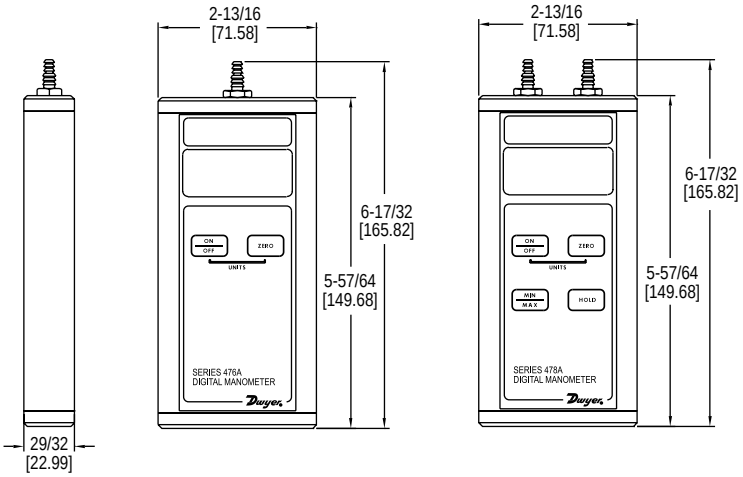

The **Series 476A Single Pressure Digital Manometer** can be used to measure low pressures from -20 to 20 in w.c. with ±1.5% full-scale accuracy.

The **Series 478A Single Pressure Differential Pressure Digital Manometer** can be used to measure positive, negative, or differential pressures with ±1.5% full-scale accuracy. Both units are constructed of an extruded aluminum case for exceptional durability.

BENEFITS/FEATURES

- ±0.5% full-scale accuracy
- Rugged extruded aluminum housing
- One button auto-zero function
- Auto power off function to conserve battery life
- Instant selection of up to nine English/metric units

APPLICATIONS

- Verify field instrumentation performance
- Adjust fuel mixture on combustion systems

SPECIFICATIONS

Service: Air and compatible gases.
Wetted Materials: Consult factory.
Accuracy: ±1.5% FS at 72°F (22.2°C). Includes linearity and repeatability.
Pressure Hysteresis: ±0.1% FS.
Pressure Limits: 5 psig (.74 bar).
Temperature Limits: 0 to 140°F (-17.8 to 60°C).
Compensated Temperature Limits: 32 to 104°F (0 to 40°C).
Thermal Effect: 0.05% FS/°F.
Display: 4 digit LCD (.425˝H x .234˝W digits).
Power Requirements: 9 V alkaline battery, installed non-functional, user replaceable.
Process Connections: For use with 3/16˝ or 1/4˝ ID tubing.
Weight: 10.8 oz (306 g).
Compliance: CE.

MODEL CHART

Model	Range in w.c.	Available Pressure Units									Resolution in w.c.	Maximum Pressure
		bar	psi	in Hg	kPa	in w.c.	mm Hg	mbar	mm w.c.	Pa		
476A-0	-20.0 to 20.0	.0498	0.723	1.471	4.98	20.00	37.4	49.8	508	-	0.02	5 psig
478A-0	-4.00 to 4.00	-	.1445	.294	0.996	4.00	7.47	9.96	101.6	996	0.01	5 psig
478A-1	-60.0 to 60.0	.1495	2.168	4.41	14.95	60.0	112.1	149.5	1524	-	0.1	5 psig

OPTIONS

To order add suffix:	Description
-NIST	NIST traceable calibration certificate
Example: 478A-1-NIST	

ACCESSORIES

Model	Description
A-402A	Carrying case, tough gray nylon pouch protects any Series 476A/478A manometer, double zippered for quick and easy access, belt loop that snaps closed, 7-1/2˝H x 3˝W x 2-1/4˝D (191 x 76 x 57 mm)
A-47X-BOOT	Protective magnetic rubber boot

A-402A

A-47X-BOOT
(manometer not included)

Process Tubing Options: See page 453 (Gage Tubing Accessories)

Dwyer

SERIES 477B

HANDHELD DIGITAL MANOMETER

Precise Air Pressure Measurement, ±0.1% Accuracy

CALIBRATION SERVICES AVAILABLE

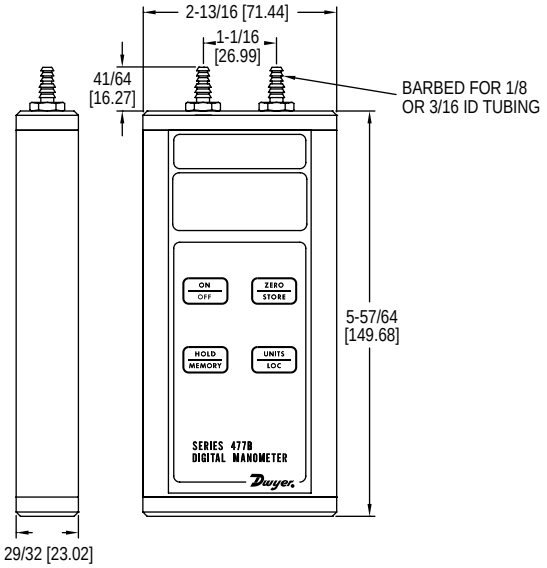

The **Series 477B Handheld Digital Manometer** is a versatile, hand-held, battery operated manometer available in several basic ranges from 0-20 in w.c. up to 100 psi. All models measure either positive, negative or differential pressures with ±0.10% of full-scale accuracy. You can select from up to seven common English and metric pressure units so conversions are not necessary. A memory function allows storage of up to 40 readings for later recall and a backlight provides auxiliary lighting for hard-to-see locations. Also standard is a hold feature; plus both visual and audible overpressure alarms.

BENEFITS/FEATURES

- Precise 0.1% FS accuracy provides four times better accuracy than most standard manometer/gages
- Aluminum housing protects instrument against damage
- 40 readings in internal memory reduces time to record data

APPLICATIONS

- Lab calibration of other pressure instruments
- Air velocity/air flow measurements in commercial buildings

SPECIFICATIONS

Service: Air and compatible gases.
Wetted Parts: Consult factory.
Accuracy: ±0.10% FS from 60 to 78°F (15.6 to 25.6°C); ±1% FS from 32 to 60 and 78 to 104°F (0 to 15 .6 and 25.6 to 40°C).
Pressure Hysteresis: ±0.1% FS.
Pressure Limits: See chart.
Temperature Limits: 0 to 140°F (-17.8 to 60°C).
Storage Temperature Limits: -4 to 176°F (-20 to 80°C).
Display: 4-digit LCD (.425″ H x .234″ W digits).
Resolution: See chart.
Power Requirements: 9 V alkaline battery. Battery included, but not connected.
Connections: Two barbed connections for use with 1/8″ (3.18 mm) or 3/16″ (4.76 mm) I.D. tubing for 477B-1, 477B-2, 477B-3, 477B-4 and 477B-5 only. Two compression fittings for use with 1/8″ (3.18 mm) I.D. x 1/4″ (6.35 mm) O.D. tubing for 477B-6 and 477B-7 only.
Weight: 10.2 oz. (289 g).
Compliance: CE.

MODEL CHART

Model	Range	Available Pressure Units										Maximum Pressure
		bar	psi	in Hg	kPa	in w.c.	mm Hg	mbar	ft w.c.	mm w.c.	Pa	
477B-1	0 to 20.00 in w.c.	.0498	.7225	1.471	4.982	20.00	37.36	49.82	1.667	508.0	4982	3 psig
477B-2	0 to 40.00 in w.c.	.0996	1.445	2.942	9.96	40.00	74.73	99.6	3.333	1016	9964	3 psig
477B-3	0 to 200.0 in w.c.	.4982	7.225	14.71	49.82	200.0	373.6	498.2	16.67	5080	-	15 psig
477B-4	0 to 10.00 psi	.6895	10.00	20.36	68.95	276.8	517.1	689.5	23.07	7031	-	30 psig
477B-5	0 to 30.00 psi	2.069	30.00	61.08	206.9	830.4	1551	2069	69.20	-	-	60 psig
477B-6	0 to 50.00 psi	3.447	50.00	101.8	344.7	1384	2585	3447	115.3	-	-	100 psig
477B-7	0 to 100.0 psi	6.895	100.0	203.6	689.5	2768	5171	6895	230.7	-	-	200 psig

OPTIONS

To order add suffix:	Description
-NIST	NIST traceable calibration certificate
Example: 477B-1-NIST	

ACCESSORIES

Model	Description
A-402A	Carrying case; tough gray nylon pouch protects any Series 477B Manometer; double zippered for quick and easy access, with a belt loop that snaps closed; 7-1/2″H x 3″W x 2-1/4″D (191 x 76 x 57 mm)
A-47X-BOOT	Protective magnetic rubber boot

A-402A

A-47X-BOOT
(manometer not included)

AIR VELOCITY KITS

Digital Manometer and Pitot Tube for Balancing System Air Flows

475-XX-FM-AV

475-XXT-FM-AV

477-XXXT-AV

Convenient all-in-one **Series 475-AV & 477-AV Air Velocity Kits** are small, light and easy to use. No set-up or leveling needed. An indispensable test kit for the plant engineer, and HVAC technician that must balance system air flows at start-up.

BENEFITS/FEATURES
- Comprehensive kit for HVAC and industrial applications
- Rugged construction for longevity
- Conversion from pressure to air velocity made easy
- Proudly assembled in the USA

APPLICATIONS
- Building commissioning
- Building HVAC test and balance
- Critical environment testing
- Industrial process verification
- Instrumentation validation

MODEL CHART - 475-XX-FM-AV	
Model	**Range**
475-00-FM-AV	0-4.000 in w.c.
475-0-FM-AV	0-10.00 in w.c.
475-1-FM-AV	0-20.00 in w.c.
475-2-FM-AV	0-40.00 in w.c.

THE SERIES 475-XX-FM-AV KIT INCLUDES:
- Series 475 digital manometer
  (±0.5% FS accuracy and minor divisions to 0.01, large 1/2″ LCD readout is easy to see in poorly lighted areas and has “low battery” warning)
- Model 166-6-CF, 6″ SS pitot tube with integral compression fitting to hold it securely when taking readings
- Two no. A-303 static pressure tips with magnetic mounting
- Two 4-1/2′ lengths 3/16″ ID rubber tubing
- No. A-397 step drill for 3/16″-1/2″ holes in 1/16″ increments
- No. A-532 AV slide chart
- 9 V battery
- Fitted polyethylene case

MODEL CHART - 475-XXT-FM-AV	
Model	**Range**
475-00T-FM-AV	0-4.000 in w.c.
475-0T-FM-AV	0-10.00 in w.c.
475-1T-FM-AV	0-20.00 in w.c.

THE SERIES 475-XXT-FM-AV KIT INCLUDES:
- Series 475 digital manometer
  (±0.5% FS accuracy and minor divisions to 0.01, large 1/2″ LCD readout is easy to see in poorly lighted areas and has “low battery” warning)
- Model 166T, 36″ telescoping SS pitot tube, fully adjustable from 11.5″ to 36″ (29.2 to 91.4 cm)
- Two no. A-303 static pressure tips with magnetic mounting
- Two 4-1/2′ L 3/16″ ID rubber tubing
- No. A-397 step drill for 3/16″-1/2″ holes in 1/16″ increments
- No. A-532 AV slide chart
- 9 V alkaline battery
- Fitted polyethylene case

MODEL CHART - 477AV-XXXT-AV	
Model	**Range**
477-000T-AV	0-1.000 in w.c.
477-00T-AV	0-4.000 in w.c.
477-0T-AV	0-10.00 in w.c.
477-1T-AV	0-20.00 in w.c.

THE SERIES 477-XXXT-AV KIT INCLUDES:
- Series 477AV digital manometer
  (±0.5% FS accuracy, calculates air velocity or volumetric air flow, stores up to 40 readings in memory, instantly selecting up to nine English/Metric pressure units, large, backlit 0.4″ LCD readout, both audible and visual overpressure alarms and a “low battery” warning are standard features)
- Model 166T, 36″ telescoping SS pitot tube, fully adjustable from 11.5″ to 36″ (29.2 to 91.4 cm)
- Two no. A-303 static pressure tips with magnetic mounting
- Two 4-1/2′ L 3/16″ ID rubber tubing
- No. A-397 step drill for 3/16″-1/2″ holes in 1/16″ increments
- No. A-532 AV slide chart
- 9 V alkaline battery
- Fitted polyethylene case

Dwyer

SERIES HM35

PRECISION DIGITAL PRESSURE MANOMETER

Up to 0.05% Accuracy, Graphical Display, Data Logging Capability

CALIBRATION SERVICES AVAILABLE

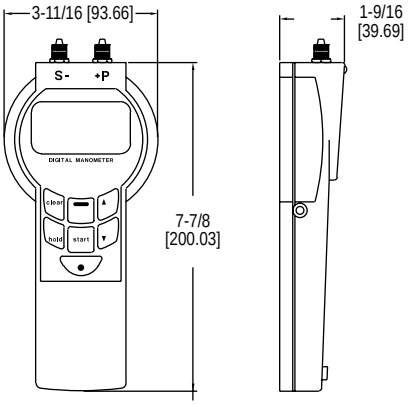

The **Series HM35 Precision Digital Pressure Manometer** is designed to reliably measure and log absolute pressure, differential pressure, or gage pressure with up to 0.05% accuracy. The data logging function can store up to 10,742 readings and transmit the readings to a PC through an IR serial port. The large display can graphically display trends in the data as well as peaks and valleys.

BENEFITS/FEATURES

- Able to record up to 10,742 readings, which can be downloaded to a PC
- Up to 0.05% accuracy for use in critical applications
- Measure absolute, differential, or gage pressure

APPLICATIONS

- Calibration facilities
- Laboratories

MODEL CHART - ERROR LIMIT 0.2% FS FOR GAGE, VACUUM, AND DIFFERENTIAL PRESSURE

Model	Range	Over Pressure
HM3531DLB300	0 to 10 in w.c. (0-2.5 kPa)	50 in w.c.
HM3531DLC300	0 to 28 in w.c. (0-7 kPa)	140 in w.c.
HM3531DLE300	0 to 80 in w.c. (0-20 kPa)	600 in w.c.
HM3531DLF300	0 to 120 in w.c. (0-30 kPa)	600 in w.c.
HM3531DLG300	0 to 200 in w.c. (0-50 kPa)	58 psi
HM3531DLH300	0 to 14.5 psi (0-100 kPa)	58 psi

Note: For higher accuracy models, change the 10th digit from a 3 to a 1 (0.05% FS), 2 (0.1% FS), or 6 (0.1% of reading); higher accuracies are only available on 0 to 28 in of w.c. range or higher.

Example: HM3531DLC100 (0 to 28 in w.c. with 0.05% accuracy); consult factory.

ACCESSORIES

Model	Description
HM35-1	Communication software key
HM35-2	Infrared RS-232 serial adaptor, required to download stored data to a PC
HM35-3	External power converter with U.S. plug adaptor, input 100 to 240 VAC, 50/60 Hz

OPTIONS

Use order code:	Description
NISTCAL-MD1	NIST traceable calibration certificate

Note: New units include data report/calibration report. NIST can be provided for the additional fee.

SPECIFICATIONS

Service: Air and compatible gases.
Wetted Materials: 18/8 stainless steel.
Accuracy: (Includes linearity, hysteresis, and repeatability): Depending on model; ±0.20% FS ±1 digit; ±0.10% FS ±1 digit; ±0.05% FS ±1 digit.
Temperature Limits: 32 to 122°F (0 to 50°C).
Storage Temperature: -4 to 140°F (-20 to 60°C).
Humidity: Maximum 95% RH non-condensing.
Display: Graphical back lit LCD. 128 x 64 points.
Power Requirements: (3) 1.5 V AA alkaline batteries, installed functional, user replaceable. Can operate on 6 to 9 VDC external power.
Current Consumption: 25 mA without back lit display, IR, or buzzer.
Memory: 10,742 readings. Recording intervals adjustable from 1 s to 24 hrs or manual.
Case Protection: IP54 (NEMA 3).
Process Connections: Hose 4/6 mm or 1/8″ NPT.
Weight: 10.5 oz (300 g).

Dwyer
SERIES 490A

HYDRONIC DIFFERENTIAL PRESSURE MANOMETER

Liquid and Gas Pressure Measurement, ±0.5% Full-Scale Accuracy

CALIBRATION SERVICES AVAILABLE

DEALER DESIGN AWARDS

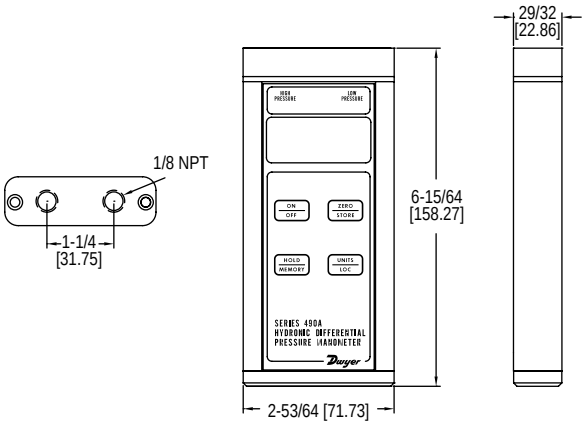

The **Series 490A Hydronic Differential Pressure Manometer** is versatile, hand-held, battery operated manometers available in several basic ranges for positive or positive differential pressure measurement and can tolerate most liquid media compatible with 316L stainless steel.
A new feature added to the Series 490A is a field adjustable damping, which allows the user to choose the level of display averaging rate corresponding to the fluctuation level common in many applications.

BENEFITS/FEATURES
- Seven user-selectable English and metric units
- Stores up to 40 readings for later recall
- Backlight for use in dim areas
- Digital dampening for low pressure - high resolution logging stability
- Automatic resolution adjustment for finer control

APPLICATIONS
- Chiller to coils for freeze protection
- Hydronic valve balancing
- Measure pressure drop across pumps
- Refrigerant pressure testing

SPECIFICATIONS
Service: Compatible gases and liquids.
Wetted Materials: Without valve: 316L SS, -3V option: 316L SS, Buna-N, silicone, grease, PTFE, brass 360, copper, reinforced acetal copolymer.
Accuracy: ±0.5% FS, 60 to 78°F (15.6 to 25.6°C); ±1.5% FS from 32 to 60°F and 78 to 104°F (0 to 15.6°C and 25.6 to 40°C).
Pressure Hysteresis: ±0.1% FS.
Pressure Limits: See chart.
Electronic Temperature Limits: 32 to 140°F (0 to 60°C).
Storage Temperature Limits: -4 to 176°F (-20 to 80°C).
Display: 0.42″ (10.6 mm) 4 digit LCD.
Resolution: See chart.
Power Requirements: 9 V alkaline battery, installed non-functional, user replaceable.
Weight: 14.1 oz (400 g).
Process Connections: Two 1/8″ (3.18 mm) female NPT.
Compliance: CE.

MODEL CHART

Model	Range psi	Available Pressure Units and Resolution**								Maximum Pressure
		bar	psi	in Hg	kPa	in w.c.	mm Hg	mbar	ft w.c.	
490A-1	0 to 15.00	1.034	15.00	30.54	103.4	415.2	775.7	1034	34.60	30 psig
490A-2	0 to 30.00	2.069	30.00	61.08	206.9	830.4	1551	2069	69.20	60 psig
490A-3	0 to 50.00	3.447	50.00	101.8	344.7	1384	2585	3447	115.3	100 psig
490A-4	0 to 100.0	6.895	100.0	203.6	689.5	2768	5171	6895	230.7	200 psig
490A-5	0 to 500.0	34.47	500.0	1018	3447	9999*	9999*	9999*	1153	1000 psig
490A-6	0 to 200.0	13.79	200.0	407.2	1379	5536	9999*	9999*	461.3	400 psig

*Digits will display smaller units until all 4 digits are exceeded.
**Readings less than 10% of range will provide one additional decimal place than shown for higher resolution.

OPTIONS

To order add suffix:	Description
-3V	3-way vent valve with bleed screw rated up to 100 psi
-NIST	Includes NIST Calibration traceable certificate
Example: 490A-1-NIST	

ACCESSORIES

Model	Description
A-402A	Carrying case, tough gray nylon pouch protects any Series 490A manometer, double zippered for quick and easy access, belt loop that snaps closed
A-47X-BOOT	Rubber boot for manometers (manometer no included)
A-HKIT-500	Piercing gage adaptor for the 490A-HKIT, 1/8″ dia x 1-1/2″ length (2 per kit)
A-HKIT-500XL	Piercing gage adaptor for the 490A-HKIT, 1/8″ dia x 3″ length (2 per kit)
A-HKIT-510	Piercing gage adaptor for the 490A-HKIT, 1/16″ dia x 1-1/2″ length (2 per kit)
A-HKIT-HOSES	One pair red and blue 60″ SAE replacement hoses for the 490A-HKIT, each with integral ball valve
NIST Calibration	Please contact your regional Dwyer distributor or Dwyer International Sales Office for scheduling your NIST recertification

-3V option
3-way vent valve

A-47X-BOOT
(manometer not included)

A-402A

USA: California Proposition 65
WARNING: This product can expose you to chemicals including Lead, which is known to the State of California to cause cancer and birth defects or other reproductive harm. For more information go to www.P65Warnings.ca.gov.

Dwyer

MODEL AQH-20

HANDHELD INDOOR AIR QUALITY METER

Measures CO_2, Temperature and Humidity

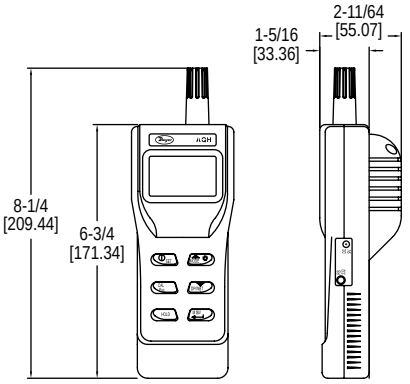

The **Model AQH-20 Handheld Indoor Air Quality Meter** reduces the number of instruments a contractor has to carry by measuring carbon dioxide concentration, air temperature, and humidity percentage in one device. A large backlit LCD shows all three parameters simultaneously. This product offers user selectable engineering units, maximum/minimum/average readings, a hold function, and an audible alarm.

BENEFITS/FEATURES
- All-in-one unit for carbon dioxide, temperature, and humidity
- Large backlit LCD for visibility in dark areas
- User configurable alarms for audible indication of hazardous conditions

APPLICATIONS
- Building commissioning
- Green house monitoring

SPECIFICATIONS

Ranges: CO_2: 0 to 2000 PPM; Temperature: 14 to 140°F (-10 to 60°C); Relative humidity: 0.0 to 99.9% RH.
Accuracy: CO_2: ±30 PPM ±5% of reading; Temperature: ±0.9°F (±0.6°C); Humidity: ±3% RH (10 to 90%), ±5% (0.0 to 9.9% or 90 to 99.9%).
Resolution: CO_2: 1 PPM; Temperature: 0.1°F (0.1°C); Humidity: 0.1% RH.
Response Time: CO_2: < 30 s; Temperature: < 2 minutes; Humidity: < 10 minutes.
Display: 4 digits for temperature/CO_2 and 3 digits for humidity.
CO_2 Sensor: Non-dispersive infrared.
Temperature Limits: 32 to 122°F (0 to 50°C).
Humidity Limits (Non-Condensing): 0 to 95% RH.
Power Requirements: (4) 1.5 V AA alkaline batteries, included, user replaceable.
Warm Up Time: 30 s.
Weight: 6.76 oz (200 g).

MODEL CHART

Model	CO_2 Range	Humidity Range	Temperature Range
AQH-20	0 to 2000 PPM	0.0 to 99.9%	14 to 140°F (-10 to 60°C)

MODEL ANE-1

DIFFERENTIAL PRESSURE ANEMOMETER

Bi-Directional Anemometer, No Sensing Electronics

Tubing adaptor

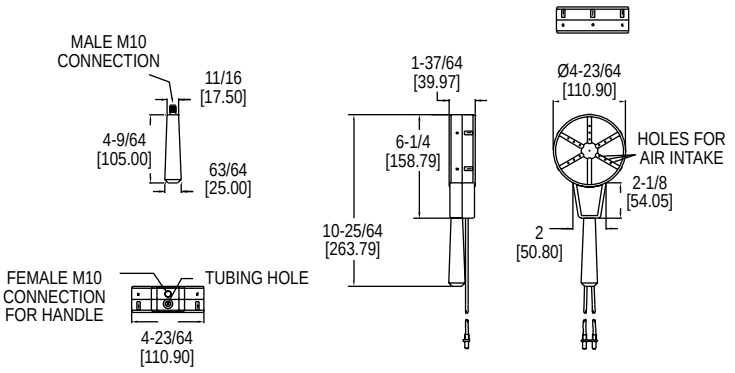

The **Model ANE-1 Differential Pressure Anemometer** is a robust and durable bi-directional anemometer with no moving parts or sensing electronics. Using the installed tubing, the ANE-1 connects easily to any manometer or applicable pressure sensing device and is capable of measuring a wide velocity range. The air velocity range and accuracy is dependent on the installed manometer, and the ANE-1 retains the accuracy as long as it is dust free.

BENEFITS/FEATURES
- Wide velocity range dependent on connected manometer
- Includes 5´ of blue and 5´ of red silicone tubing with a removable adaptor sized 2 mm OD to 3/16˝ OD

APPLICATIONS
- Measure face air velocity on grills, diffusers, registers, exhaust hoods

SPECIFICATIONS

Service: Clean air only.
Wetted Materials: Anemometer: ABS; Tubing: Silicone; Handle: Phenolic.
Dimensions: Tubing: 2 mm ID x 4.5 mm OD; Adaptor: 2 mm OD to 3/16˝ OD connections.
Temperature Limits: 23 to 122°F (-5 to 50°C).
K-Factor: 0.843.
Process Connections: 2 removable 5˝ (12.7 cm) tubing 3/16˝ ID.
Weight: 7.7 oz (220 g).

MODEL CHART

Model	Description
ANE-1	Differential pressure anemometer

Dwyer

SERIES 1221/1222/1223

FLEX-TUBE® U-TUBE MANOMETERS

CALIBRATION SERVICES AVAILABLE

1221 1222 1223

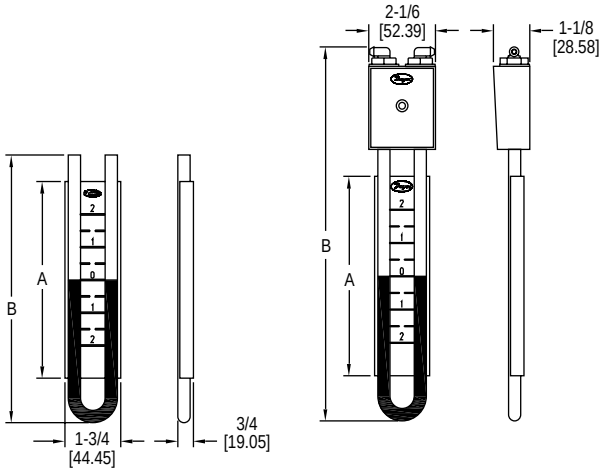

Range		Hg Required to Fill		1221, 2 and 3 Scale Length"A"		1221 and 2 O.A. Length "B"		1223 O.A. Length "B"	
Inches H_2O	Millimeters H_2O	Grams	Ounces	W/M	D	W/M	D	W/M	D
8 (4-0-4)	M200 (100-0-100)	178.5	6.3	12-1/4	14	15-1/4	17	18-1/2	19-7/8
12 (6-0-6)	M300 (150-0-150)	225.5	7.9	16-1/4	18-7/8	19-1/4	21-3/4	21-1/8	24-5/8
16 (8-0-8)	M400 (200-0-200)	269	9.5	20-3/8	23-5/8	23-1/4	26-1/2	26-1/8	30-3/8
20 (10-0-10)	-	314.5	11.1	24-1/4	28-1/2	27-1/4	31-1/2	30-1/8	34-3/8
-	M600 (300-0-300)	353.1	12.4	27-7/8	32-7/8	30-3/4	35-3/4	33-5/8	38-5/8
24 (12-0-12)	-	379.7	13.4	28-1/4	33-3/8	31-1/2	36-1/4	33-3/8	39-1/8
36 (18-0-18)	-	491.1	17.3	40-1/4	47-7/8	43-1/4	50-3/4	46-1/8	53-5/8
-	M1000 (500-500)	526.6	18.5	43-5/8	52	46-1/2	55	49-3/8	57-7/8

Note: Not recommended for vacuum service above 5 in. Hg (68 in w.c.).

The **Series 1221/1222/1223 Flex-Tube® U-Tube Manometers** combine the inherent accuracy of the "U" Tube with the durability of tough, long-lasting plastic construction. The columns are made of 0.375″ O.D. flexible and shatterproof clear butyrate tubing and are backed by a white scale channel to provide maximum color contrast. These manometers are ideal wherever a portable, direct reading manometer is needed.

BENEFITS/FEATURES
- Suitable for total pressures up to 100 psi
- High contrast scale for better precision when measuring

APPLICATIONS
- Duct static pressure
- Calibration labs
- Filter monitoring

Series 1221 Flex-Tube® U-Tube Manometer
Our simplest, lowest cost basic U-gage. A dependable U-tube manometer that withstands hard use and provides accurate, high visibility readings. For use with water, mercury or red gage fluid. For mercury filled manometers, a scale clamp bar, Dwyer® Part No. A-363 (available as an extra for Series 1221 — and standard on Series 1222) is recommended. One pair of carrying plugs and a pair of non-kink vinyl tube connectors are included with each manometer.

Series 1222 Flex-Tube® U-Tube Manometer
All the features of the 1221 plus magnetic clips for mounting to any vertical steel surface, and clamp bar to insure against U-tube slipping. (Especially recommended for manometers used with mercury.) Both magnets are easily removed and replaced at the user's convenience.

Series 1223 Flex-Tube® U-Tube Manometer
Our finest U-gage — for either portable or stationary use. Safety traps prevent loss of indicating fluid in case of accidental over-pressure. Tubing is permanently bonded to a molded, high impact acrylic plastic top that contains safety traps. Large magnetic clips and clamp bar are provided. Standard type "a" connections include two rapid shut-off type molded nylon tubing connections, two 3-foot lengths of flexible Tygon® plastic tubing, and two 1/8″ pipe thread to tube adaptors.

MODEL CHART

Model	Model	Model	Ranges
1221-8-W/M	**1222-8-W/M**	**1223-8-W/M**	8 (4-0-4) in w.c.
1221-12-W/M	**1222-12-W/M**	**1223-12-W/M**	12 (6-0-6) in w.c.
1221-16-W/M	**1222-16-W/M**	**1223-16-W/M**	16 (8-0-8) in w.c.
1221-20-W/M	**1222-20-W/M**	**1223-20-W/M**	20 (10-0-10) in w.c.
1221-24-W/M	**1222-24-W/M**	**1223-24-W/M**	24 (12-0-12) in w.c.
1221-36-W/M	**1222-36-W/M**	**1223-36-W/M**	36 (18-0-18) in w.c.
1221-M200-W/M	**1222-M200-W/M**	**1223-M200-W/M**	M200 (100-0-100) mm w.c.
1221-M300-W/M	**1222-M300-W/M**	**1223-M300-W/M**	M300 (150-0-150) mm w.c.
1221-M400-W/M	**1222-M400-W/M**	**1223-M400-W/M**	M400 (200-0-200) mm w.c.
1221-M600-W/M	**1222-M600-W/M**	**1223-M600-W/M**	M600 (300-0-300) mm w.c.
1221-M1000-W/M	**1222-M1000-W/M**	**1223-M1000-W/M**	M1000 (500-0-500) mm w.c.

Note: To order models with red gage fluid change -W/M to -D.

OPTIONS

To order add suffix:	Description
-NIST	NIST traceable calibration certificate

Example: 1230-8-W/M-NIST

ACCESSORIES - STANDARD

Model	Description
1221	2 plastic carrying plugs; 2 flexible plastic tubing connectors for attachment of 3/16″ rubber or plastic tubing without kinking. 1 ounce bottle .826 sp. gr. red gage fluid furnished for "D" style manometers. Fluorescein green dye concentrate furnished with "W/M" style manometers.
1222	2 magnetic mounting clips; tube clamp; 2 plastic carrying plugs and 2 flexible plastic tubing connectors for attachment of 3/16″ rubber or plastic tubing without kinking. 1 ounce bottle .826 sp. gr. red gage fluid furnished for "D" style manometers. Fluorescein green dye concentrate furnished with "W/M" style manometers.
1223	Magnetic mounting clips; tube clamp and Type "a" connections consisting of two rapid shut off molded nylon tubing connectors; two 1/8″ pipe thread to tube adapters; two 3-foot lengths of Tygon® plastic tubing, 1 ounce bottle .826 sp. gr. red gage fluid is furnished for "D" style manometers; fluorescein green dye concentrate with "W/M" style.

Tygon® is a registered trademark of Saint-Gobain Performance Corporation

Dwyer

SERIES 1211 & MODEL 1212

SLACK TUBE® MANOMETER

Slack Tube® manometer rolled up for easy handling and storage

1212 gas pressure kit

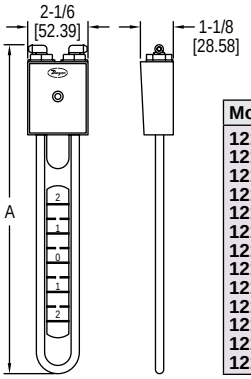

Model	Dimension "A"
1211-8	16-3/4 [425.45]
1211-12	20-3/4 [527.05]
1211-16	24-3/4 [628.65]
1211-24	32-3/4 [831.85]
1211-30	38-3/4 [984.25]
1211-36	44-3/4 [1136.65]
1211-48	56-3/4 [1441.45]
1211-60	68-3/4 [1746.25]
1211-72	80-3/4 [2051.05]
1211-120	128-3/4 [3270.25]
1211-50	28-3/4 [730.25]
1211-100	48-3/4 [1238.25]
1211-200	87-3/4 [2228.85]

The **Series 1211 Slack Tube® Manometer** is as accurate as the finest laboratory "U" gages, but is designed to roll up compactly for easy carrying. These manometers cover a wide range of pressure readings from 4-0-4 inches up to 60-0-60 inches.

The **Model 1212 Gas Pressure Kit** in comes supplied with a 1211-16 Slack Tube® Manometer, carrying case, necessary tubing, and connection fittings for checking gas pressures in virtually all gas appliances.

BENEFITS/FEATURES
- Rolls up for easy storage and transport
- Over pressure safety traps to prevent loss of fluid due to over range pressures or surges in pressure

APPLICATIONS
- Filter monitoring
- Duct static pressure for setting damper position

INCLUDED WITH THE 1212 KIT
Description
(1) #1211-16 Slack Tube® Manometer, reads pressure to 16″ water*, (1) Carrying case, plastic, 8-1/2″ x 7″ x 3-1/8″, (1) 1 oz. bottle Fluorescein green color concentrate with wetting agent, (2) 1/8″ pipe thread rubber tubing adapters, (1) 1/8″ to 1/4″ pipe thread bushing, (1) 3′ L 3/16″ rubber tubing, (1) Rubber tubing adaptor to fit standard 7/16″ dia. spud.
*Other ranges available.

MODEL CHART					
Model	**Range, In.**	**Hg Req'd (oz.)**	**Metric Model**	**Range, CM**	**Hg Req'd (oz.)**
1211-8	4-0-4	6	**1211-50**	25-0-25	11
1211-12	6-0-6	7	**1211-100**	50-0-50	18-1/2
1211-16	8-0-8	9	**1211-200**	100-0-100	35
1211-24	12-0-12	12-1/2			
1211-30	15-0-15	15			
1211-36	18-0-18	17-1/2			
1211-48	24-0-24	22-1/2			
1211-60	30-0-30	27			
1211-72	36-0-36	32			
1211-120	60-0-60	57			

MODEL CHART	
Model	**Description**
1212	Gas pressure kit

ACCESSORIES - STANDARD
Description
Plastic case, magnetic mounting clips, two rapid shutoff type molded nylon rubber tubing connectors and one bottle of fluorescein green color concentrate with wetting agent.

SERIES 1227

DUAL RANGE FLEX-TUBE® U-INCLINED MANOMETERS

1227 dual range

1227 mounted in incline position

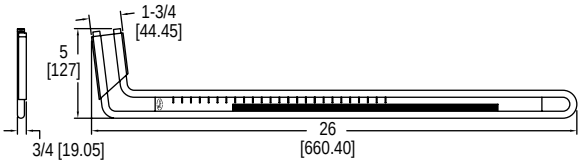

As Vertical U-Tube Manometer	As Inclined Manometer
0-16″ water with 1″ major divisions, .2″ minor divisions	Scale is 17″ long, reading .20-0-2.6″ water with .02″ minor divisions
Model 1227M (metric) is 0-400 mm water column	Model 1227M (metric) is -5 to 0 to 70 mm water column

The **Series 1227 Dual Range Flex-Tube® U-Inclined Manometers** are versatile, low cost manometers that can be used to read high-range pressure on the right leg or as an inclined manometer to read low-range pressure on the bottom leg. It is made of a sturdy, clear plastic and offers direct readings as a U-tube or an inclined gage. Magnetic clips are attached to the unit to hold it in position on any steel duct surface and instructions are conveniently printed directly on the scale.

BENEFITS/FEATURES
- Reads 0 to 16 in w.c. as a U-tube and -0.20 to 0 to 2.6 in w.c. as an inclined gage
- Clear, shatterproof indicating tube provides overpressure protection
- Black markings on a stark white scale for positive definition

APPLICATIONS
- Fan status
- Filter monitoring

MODEL CHART	
Model	**Description**
1227	English units
1227M	Metric units

ACCESSORIES - STANDARD
Description
Two plastic carrying plugs with retainers for use when manometer is not in service. Two magnetic clips to hold instrument to metal surface. Flexible red vinyl plastic tubing connectors. Brass terminal tube 1/4″ diameter x 8″ long. One terminal tube holder. Brass adaptor, 1/8″ pipe thread to plastic tubing. One 4-1/2′ length of Tygon® plastic tubing. One 1 ounce bottle .826 sp. gr. red gage fluid. Vinyl carrying case.

USA: California Proposition 65
⚠**WARNING:** This product can expose you to chemicals including Lead, which is known to the State of California to cause cancer and birth defects or other reproductive harm. For more information go to www.P65Warnings.ca.gov.

Tygon® is a registered trademark of Saint-Gobain Performance Corporation

Dwyer

SERIES MARK II

MOLDED PLASTIC AIR VELOCITY METERS

Low in Cost, Direct Reading Scales Offer 3% Accuracy, For Portable or Stationary Applications

27

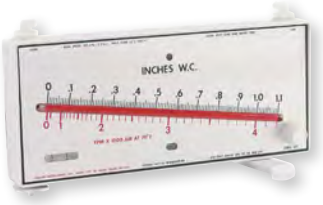

40-AV – Shown with standard swing-out stand and leveling screw installed.

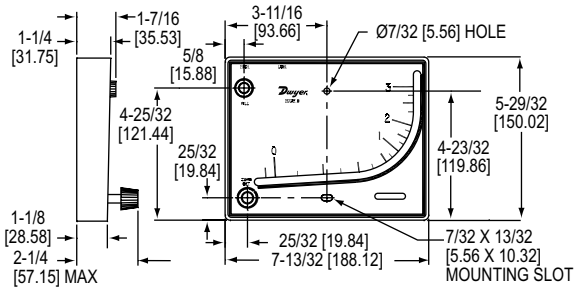

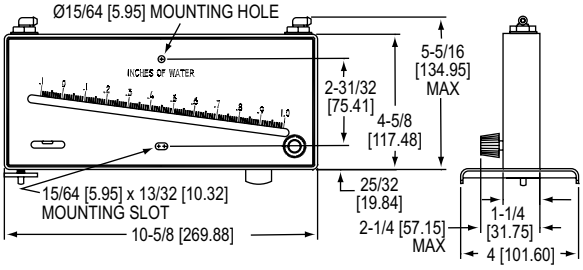

The **Series Mark II Molded Plastic Air Velocity Meters** offer the accuracy and durability of our Mark II manometers with direct air velocity readings. They are designed to be used with Dwyer's Series 160 line of Pitot tubes (not included).

BENEFITS/FEATURES

- Thick white styrene-acrylonitrile housing is virtually indestructible
- Moderate overpressures are accommodated by an overflow tank (Model 25) or float operated overflow traps (Model 40)
- Able to be mounted on any vertical surface

APPLICATIONS

- Measure air velocity in ducts

MODEL CHART	
Model	**Range**
Mark II 27	0 to 7000 FPM
Mark II 28	0 to 10500 FPM
Mark II 40-250 Pa-AV	0 to 21 MPS
Note: Pitot tube not included with models above.	

ACCESSORIES	
Model	**Description**
A-612	Portable stand (for models 27, 28)

OEM SPECIALS

All models of the Dwyer® Mark II molded plastic air velocity meters can be supplied with your logo or special scale in OEM quantities. Consult factory for details. See also our Digital Manometers and Pitot tubes.

Dwyer

SERIES 400

AIR VELOCITY METER

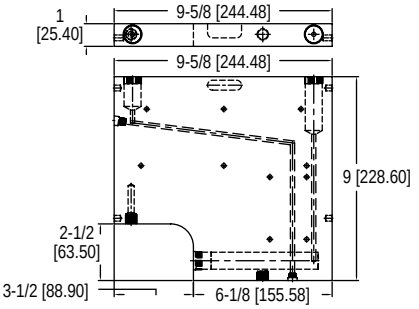

The **Series 400 Air Velocity Meter** offers the convenience of a dual purpose instrument with high accuracy and easy-to-read scales. It can be used to balance air conditioning systems, measure pressure drop across filters, and test fan and blower discharge and inlet pressures. Series 400 kits include a manometer, pitot tube, necessary tubing and connectors, red gage fluid, slide chart, and carrying case.

BENEFITS/FEATURES
- Red figures display velocity in FPM and black figures display air pressure in inch w.c.
- No conversion tables needed for air at standard conditions
- Available with Pitot tubes and carrying case

APPLICATIONS
- Air balancing
- Building commissioning

MODEL CHART - WITH COMBINATION INCLINED/VERTICAL SCALES*					
	Range	Velocity	Minor Div.; Range in w.c.		Pitot
Model	in w.c.	FPM	Inclined	Vertical	Tube
400-10-Kit	0 to 10	400 to 12600	.01, 0 to 1.0	.10, 1-10	18 in
400-10-Gage	0 to 10	400 to 12600	.01, 0 to 1.0	.10, 1-10	None
*Rated for total pressures to 100 psig (6.89 bar); temperatures to 150°F (65°C).					

Complete kit, Model 400-10
Size**: 11-1/2″H x 20-1/4″W x 1-1/2″D
Weight: Only 13-1/4 lb with equipment

**Contact factory for extra long steel cases for use with longer Pitot tubes

MODEL 460

AIR METER/DRAFT GAGE

A Low-Cost, Direct Reading Instrument Used for Air Velocity and Static Pressure Tests

Furnace draft

Grille velocities

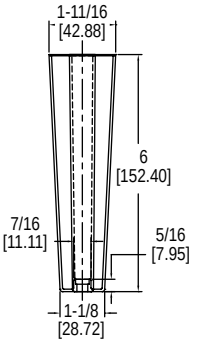

The **Model 460 Air Meter/Draft Gage** is popular for servicing HVAC equipment because of its consistent, accurate results. The direct reading velocity and static pressure scales show supply and return grille velocities, furnace draft, and pressure drop across filters. The 460 is made of a rugged plastic for daily use.

BENEFITS/FEATURES
- High and low range velocity in one unit
- Simple and quick operation with highly accurate results
- Compact housing for easy portability

APPLICATIONS
- Measuring grille velocities, furnace draft, and pressure drop across filters

MODEL CHART	
Model	Description
460	Air meter, complete kit

Complete pocket-size kit
Includes air meter, return and supply grille probes, angle connector, cleaning materials, instruction card, air velocity calculator and carrying case.

ACCESSORIES	
Model	Description
A-378	Tube of 3 replacement floats
A-379	Supply grille probe
A-380	Return grille probe
A-381	Cleaning kit including 1 anti-static chemically treated pipe stem cleaner and nylon high range orifice cleaner

Dwyer

SERIES 160

STAINLESS STEEL PITOT TUBE

ASME Design Meets AMCA and ASHRAE Codes

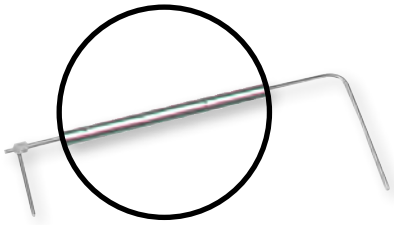

Standard Model 160 pitot tube

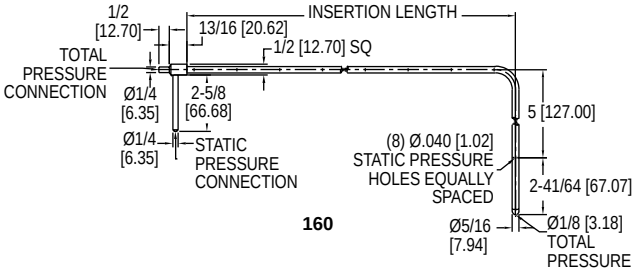

160

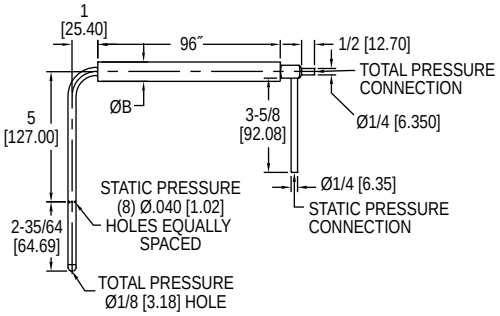

160
96˝ and longer with stiffener

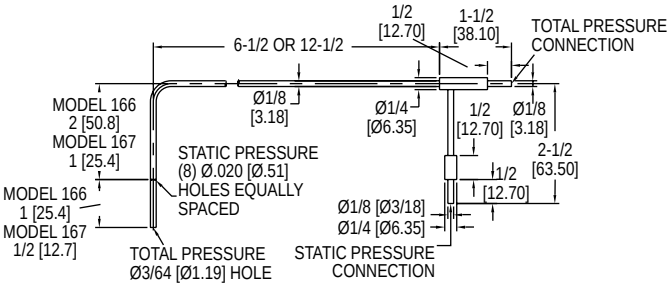

166/167

The **Series 160 Stainless Steel Pitot Tube** is constructed from corrosion resistant stainless steel with permanently etched insertion depth graduations for a lifetime of service. The static pressure port is parallel to the sensing tube to allow quick, easy alignment of the tube with air flow. A universal model fits the user supplied 3/4˝ schedule 40 pipe in any length.

FEATURES/BENEFITS

- Low sensitivity to misalignment up to 15 degrees
- No calibration needed due to ASHRAE tip design
- Silver soldered connections for leak-proof operation
- 5/16˝ models rated to 1500°F (815.5°C)

APPLICATIONS

- Monitor or control air velocity or air flow when combined with differential pressure gage, switch, or transmitter

MODEL CHART			
Standard 5/16˝ Diameter Model	**Insertion Length**	**Longer Length with Stiffener Model**	**Insertion Length**
160-8	8-5/8˝	**160-96**	96˝
160-12	12-5/8˝	**Pocket Size 1/8˝ Diameter Model**	**Insertion Length**
160-18	18-5/8˝		
160-24	24-5/8˝	**166-6**	6˝
160-36	36-5/8˝	**166-12**	12˝
160-48	48-5/8˝	**167-6**	6˝
160-60	60-5/8˝	**167-12**	12˝
Model	**Description**		
160-KIT	Kit containing 160-18, 160-24, 160-36, 160-48, and carrying case		

OPTIONS	
To order add suffix:	**Description**
-CF	1/8˝ male NPT compression fitting, mounting option for Series 166/167
Example: 166-6-CF	

ACCESSORIES	
Model	**Description**
A-156	Flange mounting plate 1/2˝ female NPT
A-158	Split flange mounting. Can be added to any Dwyer® No. 160 standard pitot tube. Zinc plated steel. Gasket is pattern for mounting holes. Secure flange loosely to tube, adjust tube depth and tighten screws. Gasket of 1/16˝ Neoprene fits tightly around tube and against duct for leak-proof seal. Nuts, washers included.
A-159	Mounting gland. Versatile adaptor slips on any Series 160, 5/16˝ standard pitot tube made after Dec. 1990. Two-part stainless steel fitting slides over tube and provides permanent, secure mounting. Where duct interior is accessible, use the washers and jam nut supplied. For blind applications or in thicker materials, use model A-156 flange mounting plate. Once tube is adjusted to proper depth and angle, tighten smaller hex bushing to lock position. Graphite bushing inside assures leak-proof seal even at higher temperatures. TFE bushing also available. **Note:** For full insertion with this fitting, order next longer pitot tube. A-159 mounting gland is used for both duct mounting and flange mounting.
A-160-CASE	Carrying case for pitot tubes up to 48˝
A-397	Step drill. For fast, convenient installation of pitot tubes in sheet metal ducts. No center punch needed; automatic de-burring. Drills six sizes from 3/16˝-1/2˝ in 1/16˝ increments.

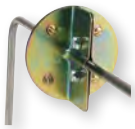

A-158

A-159

To flange mount, the A-159 must be used with the A-156 flange mounting plate.

A-160-CASE

A-397

Dwyer

MODEL 160F

STRAIGHT STAINLESS STEEL PITOT TUBE

Sensing profile

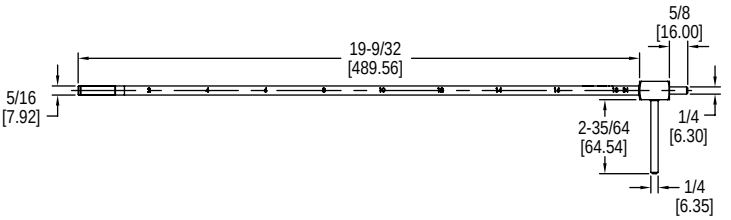

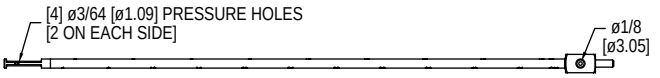

The **Series 160F Straight Stainless Steel Pitot Tube** is constructed from corrosion resistant stainless steel with permanently etched insertion depth graduations for a lifetime of service. The static pressure port is parallel to the sensing tube to allow quick, easy alignment of the tube with air flow. The straight design allows for easy insertion into ducts through grills and pressure taps, as well as aids in positioning in hard to reach locations where a hook style Pitot tube may not allow access.

BENEFITS/FEATURES

- Straight design allows for easy insertion into ducts
- Permanent stamped insertion depth graduations facilitate accurate positioning
- Alignment indicator helps keep tip parallel to flow

APPLICATIONS

- Monitor or control air velocity or air flow when combined with differential pressure gage, switch, or transmitter where hook style Pitot tubes don't allow access

SPECIFICATIONS

Wetted Material: 304 SS.
Accuracy: ±2% FS, 0 to 9000 FPM (45 M/s).
K-Factor: 0.81.
Temperature Limit: 1500°F (815°C).
Insertion Length: 18″ (44 cm).
Process Connections: 1/4″ OD.
Weight: 4.3 oz (122 g).
Compliance: Meets the technical requirements of EU Directive 2011/65/EU (RoHS II).

MODEL CHART

Model	Probe Length	Model	Description
160F	18″ (457.2 mm)	**160F-KIT**	Kit containing 160-18, 160-24, 160-36, 160-48, and carrying case
160F-24	24″ (609.6 mm)		
160F-36	36″ (914.4 mm)		
160F-48	48″ (1219.2 mm)		
160F-60	60″ (1524 mm)		

ACCESSORIES

Model	Description
A-156	Flange mounting plate 1/2″ female NPT
A-158	Split flange
A-159	Mounting gland
A-160-CASE	Carrying case for pitot tubes up to 48″
A-397	Step drill

MODEL 160E

ELLIPSOIDAL TIP PITOT TUBE

Designed to Meet ISO Standard 3966

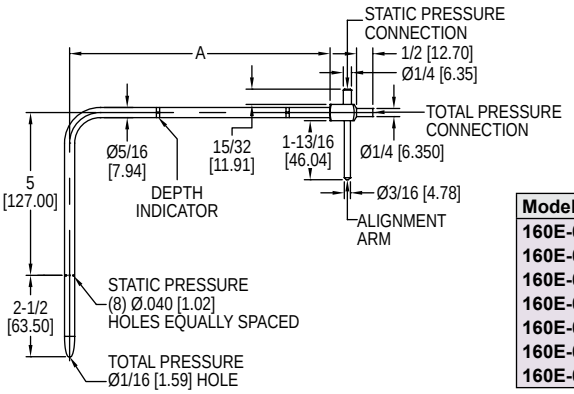

Model	Dim A
160E-00	7-7/8 [200.03]
160E-01	11-7/8 [301.63]
160E-02	18-7/8 [479.43]
160E-03	31-1/2 [800.10]
160E-04	39-1/2 [1003.30]
160E-05	48 [1219.20]
160E-06	59-7/8 [1520.83]

The **Series 160E Ellipsoidal Tip Pitot Tube** uses a precision crafted tip configuration, which allows air to pass smoothly with minimum turbulence for consistent, reliable readings. Sliding depth indicators grip firmly to ensure uniform insertion when measuring traverses across ducts. Total and static pressure taps are 1/4″ (6 mm) and are permanently silver soldered to the connection block, making them leak-proof and durable.

BENEFITS/FEATURES

- Designed to meet ISO standard 3966 commonly required in UK and Europe
- Ellipsoidal tip design for improved accuracy
- 304 SS construction adds strength and resists corrosion
- Adjustable depth indicators for fast, consistent traverses
- Alignment indicator helps keep tip parallel to flow

APPLICATIONS

- Monitor or control air velocity or air flow when combined with differential pressure gage, switch, or transmitter

MODEL CHART

Model	Insertion in Meters
160E-00	0.2
160E-01	0.3
160E-02	0.48
160E-03	0.8
160E-04	1.0
160E-05	1.22
160E-06	1.52

ACCESSORIES

Model	Description
A-160-CASE	Carrying case for pitot tubes up to 1.22 m

Handy A-532 slide chart speeds air velocity calculations. All plastic, stays clean for years. Included with each pitot tube.

Dwyer

SERIES 160S

"S" TYPE STAINLESS STEEL PITOT TUBES

Large, Open Tip Design Resists Fouling; Optional Permanent Mount Models

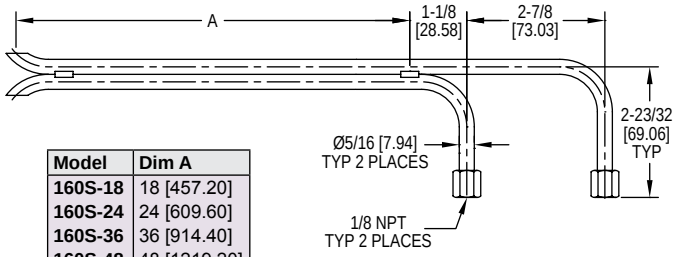

Model	Dim A
160S-18	18 [457.20]
160S-24	24 [609.60]
160S-36	36 [914.40]
160S-48	48 [1219.20]
160S-60	60 [1524.00]

The **Series 160S "S" Type Stainless Steel Pitot Tube**s are designed specifically for flow measurement of dirty, particulate laden air or gas streams typical in smoke stack and other environmental testing. Total and static pressure tubes are precisely aligned and welded together every 6 inches for maximum accuracy, strength, and long term durability. Permanent mount (PM) models include a 1˝ welded stainless steel sleeve and adjustable compression fitting with 1˝ MNPT mounting threads.

BENEFITS/FEATURES
- Large 5/16˝ stainless steel tubing resists plugging under harsh conditions
- 1/8˝ FNPT connections are permanently welded to unit
- Able to be used in up to 1500°F (815.5°C) and 100 psig (6.89 bar)

APPLICATIONS
- Monitor or control air velocity or air flow in particulate laden air streams

MODEL CHART

Model	Insertion in Inches	Perm. Mtg. Model	Insertion in Inches
160S-18	18	**160S-18PM**	18
160S-24	24	**160S-24PM**	24
160S-36	36	**160S-36PM**	36
160S-48	48		
160S-60	60		
160S-72	72		

Note: Permanent Mounting (PM) models include 1 inch dia. welded stainless steel sleeve and adjustable compression fitting with 1 inch male NPT mounting treads. Adjust depth, lock in place.

ACCESSORIES

Model	Description
A-160-CASE	Carrying case for pitot tubes up to 48˝

MODEL 166T

TELESCOPING STAINLESS STEEL PITOT TUBE

Adjustable Design Extends Insertion Length to 36 Inches

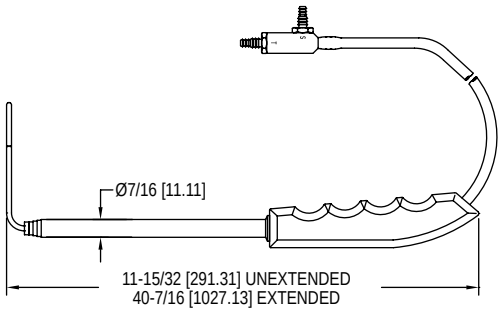

The **Model 166T Telescoping Stainless Steel Pitot Tube** is a unique air flow sensor which can quickly and easily be adjusted for any duct insertion length from 11.5 to 36 inches (29.2 to 91.4 cm), allowing it to replace up to 5 conventional fixed length Pitot tubes. The telescoping sections lock in place as they are extended, which enables the use of the handheld grip to gauge proper alignment of the tip with the airstream. For even greater convenience, it is securely protected by a custom fitted polyethylene carrying case.

MODEL CHART

Model	Description
166T	Telescoping pitot tube

BENEFITS/FEATURES
- Adjustable length can replace up to 5 fixed length Pitot tubes
- Stainless steel construction resists corrosion
- 1.8˝ diameter hemispherical tip has 1.0 flow coefficient

APPLICATIONS
- Monitor or control air velocity or air flow when combined with differential pressure gage, switch, or transmitter where varying lengths are needed

Dwyer

SERIES WIND METER

PORTABLE WIND METER

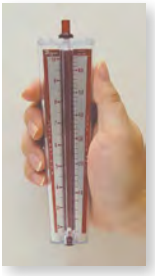

Hold this way
for low scale reading

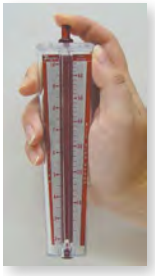

For high scale reading,
finger covers hole

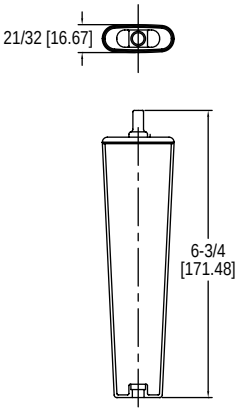

Dimensions: 5/8˝ W X 6-3/4˝ H X 17/32˝ D

The **Portable Series Wind Meter** is used to indicate wind speed and is ideal for yachtsmen, outdoors-men, and farmers. By holding the meter at eye level with the back of the unit to the wind, the white ball in the tube indicates wind speed. The meter has two scales for maximum accuracy.

BENEFITS/FEATURES
- Direct reading requires no calculations
- Dual scales to fit any requirement

APPLICATIONS
- Fishing, hunting, golf

MODEL CHART	
Model	**Scale**
Wind Meter-MPH	mph
Wind Meter-KPH	kph
Wind Meter-MPS	mps

ACCESSORIES	
Model	**Description**
A-376	Replacement floats for windmeter, tube of 3

MODEL MW-1

POCKET WIND METER

Measures Wind Speed and Temperature, Wide Range

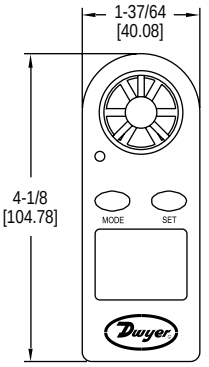

The **Model MW-1 Pocket Wind Meter** measures wind speed and temperature via the integral vane and thermo-anemometer sensor. Users can view readings on the four-digit LCD with wind speed bar graph and select units for air velocity and temperature. The MW-1 also features automatic shut-off, detailed instruction manual, and protective plastic water resistant housing that floats.

BENEFITS/FEATURES
- User selectable units to fit any requirement
- Auto shut-off to conserve battery life
- Water resistant plastic housing floats

APPLICATIONS
- Balancing applications
- Energy audits
- HVAC inspection

SPECIFICATIONS
Air Velocity Range: 0 to 30 m/s, 0 to 5860 ft/min, 0 to 90 km/h, 0 to 65 mph, 0 to 55 knots. **Temperature/Wind-Chill Ranges:** 14 to 113°F (-10 to 45°C). **Temperature Resolution:** 0.36°F (0.2°C). **Accuracy:** Wind speed: ±5% of reading. Temperature: ±3.6°F (±2°C). **Resolution:** 0.1 m/s, 19 ft/min, 0.3 km/h, 0.2 mph, 0.2 knots. **Sample Time:** 1 reading per second. **Water-Resistant:** Up to 3´ (1 m). **Power Requirements:** 3 V CR2032 or BR1225 lithium metal battery, installed functional, user replaceable. **Auto-Off:** 14 minutes after last key is pressed. **Impeller:** Plastic, replaceable. **Case:** Plastic. **Display:** 2.32 x 2˝ (59 x 51 mm). **Weight:** 1.84 oz (52.1 g). **Compliance:** CE.

MODEL CHART	
Model	**Description**
MW-1	Hand-held, mini-vane thermo-anemometer

ACCESSORIES	
Model	**Description**
A-166	Replacement vane for MW-1

Dwyer

MODEL 480

VANEOMETER™ SWING VANE ANEMOMETER

Use This Sensitive Dwyer Unit to Measure Low Air Velocities — at Low Cost

Use a Vaneometer™ swing vane anemometer to measure velocity of air flow into laboratory fume hoods and at paint spray booths to determine when to change filters. Or wherever needed to meet OSHA standards of ventilation for smoke, dust or fume removal.

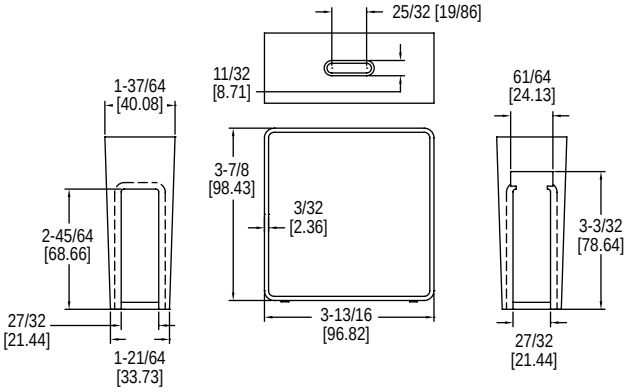

The **Model 480 Vaneometer™ Swing Vane Anemometer** is a durable, economically priced instrument specifically designed to simplify the measurement of low air velocities. It is accurate to ±5% of full-scale to 100 FPM and ±10% from 100 FPM to the top of scale. It has a spirit level to ensure accurate readings and the large scales are easy to read and visible from both sides.

MODEL CHART	
Model	**Description**
480	25 to 400 FPM
M480	0 to 2.0 m/s

BENEFITS/FEATURES
- Small size and weight for easy portability
- Easy to clean ABS plastic housing

ACCESSORIES	
Model	**Description**
A-390	Extra vanes, pkg. of 2

APPLICATIONS
- Measure air flow into laboratory fume hoods

SERIES MARK II

WIND SPEED INDICATOR

Includes ABS plastic vane, 50´ tubing, mounting hardware and gage fluid.

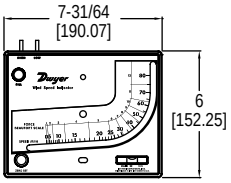

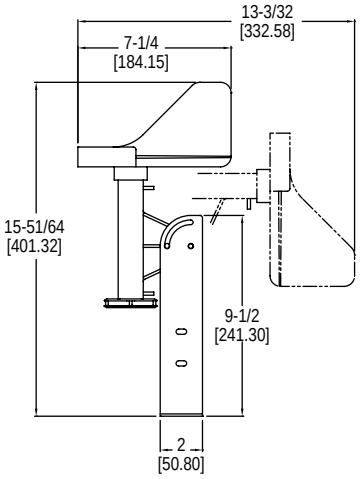

The **Series Mark II Wind Speed Indicator** indicates wind speed directly on the liquid filled scale reading in both miles per hour (0-80) and Beaufort scale (1-12). A metric model is also available, which reads the same as above, but reading 0-130 kilometers per hour. The Mark II Wind Speed Indicator is an accurate, economically priced option for measuring wind speed.

MODEL CHART	
Model	**Scale**
Mark II WSI	mph
Mark II WSI Metric	kph

BENEFITS/FEATURES
- Durable molded white instrument with gold scale
- English and metric units available

APPLICATIONS
- Weather monitoring stations

Dwyer

SERIES PUB & PUF

PORTABLE ULTRASONIC FLOWMETER KITS

Portable, Non-Invasive and Data Logging Option

PUB

PUF

The **Series PUB & PUF Portable Ultrasonic Flowmeter Kits** utilize the transit-time difference for measuring flow rates in pipes non-invasively. Units offer flow rate local display with analog and pulsed outputs. The Series PUF offers the same features plus data logging capability.

BENEFITS/FEATURES
- Non-invasive pipe measurement
- Compact and lightweight
- Incorporate the latest electronics and signal processing technologies realizing high performance and easy operation
- Ideal for on-the-go flow monitoring, capable of 20 hours continuous operation with built-in, rechargeable battery
- Easy to read graphic display with convenient backlight for visual comfort
- Efficient layout of the function keys for easy to use programming
- PUB features rugged carrying case with molded foam inserts
- PUF boasts an IP67 rated case to hold and protect all equipment conveniently

APPLICATIONS
- Water treatment
- Industrial systems
- Irrigation applications
- Treated water flow
- River water
- Sea water
- Potable water
- Demineralized water
- Glycol/water mix
- Hydraulic system
- Diesel oil
- Water use data logging

KIT INCLUDES
- Converter
- Set of transducers
- Transducer holders
- Set of transducer cables (6.56´ (2 m))
- 4-20 mA communication cables
- 12 VDC power supply
- Ultrasonic coupling grease
- Set of chains
- Ruled guide rail
- Test block
- Carrying case

USA: California Proposition 65
WARNING: This product can expose you to chemicals including Lead, which is known to the State of California to cause cancer and birth defects or other reproductive harm. For more information go to www.P65Warnings.ca.gov.

For more information on these products: See page 288

MODEL 472A-1

DUAL INPUT THERMOCOUPLE THERMOMETER

Accepts J, K, T Thermocouples, Differential Temperature Indication

CALIBRATION SERVICES AVAILABLE

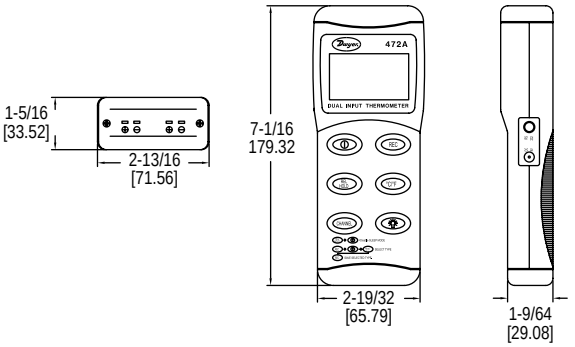

The **Model 472A-1 Dual Input Thermocouple Thermometer** precisely measures up to two temperature measurements simultaneously. The large LCD display shows both temperature inputs or one temperature input and the differential temperature. Any J, K, or T type thermocouple with a mini-jack connector can be used as an input. For viewing in poorly lit environments, the built-in back light brightens the display. A hold button allows the user to freeze temperature data displayed. Minimum and maximum readings can be recorded over a set time period. Model 472A-1 includes a hard carrying case, battery, and one K type thermocouple.

MODEL CHART

Model	Description
472A-1	Digital input thermocouple thermometer

OPTIONS

Use order code:	Description
NISTCAL-TG	NIST traceable calibration certificate

ACCESSORIES

Model	Description
1818-0074	Immersion probe
1818-0078	Penetration probe
1818-0082	Surface probe
1818-0085	Air duct probe
1718-0077	Remote probe handler
472A-B	Rubber boot

SPECIFICATIONS

Inputs: Type J, K, T thermocouples.
Power Requirements: 9 V alkaline battery, installed non-functional, user replaceable.
Ranges: J-type: -328 to 1400°F (-200 to 760°C); K-type: -328 to 2498°F (-200 to 1370°C); T-type: -328 to 734°F (-200 to 390°C).
Accuracy: ±0.13% reading + 1.4°F +.006°/°F below 1000°F.
Temperature Limits: 32 to 122°F (0 to 50°C).
Humidity Limits (Non-Condensing): 0 to 85% relative humidity.
Display: Triple LCD display.
Resolution: 0.1°C up to 500°C.
Weight: 23.6 oz.

HANDHELD THERMOCOUPLES

Model	Description	T/C Type
1718-0001 1718-0002	General Purpose Probe: Featuring a built-in handle with coiled cord and mini-plug, this general purpose probe can be used in liquids and air compatible gases. For use to 800°F.	J K
1718-0014 1718-0015	Penetration Probe: Featuring a built-in handle with coiled cord and mini-plug, this probe is used for penetrating meat, plastic, rubber, asphalt, or other semi-soft materials.	J K

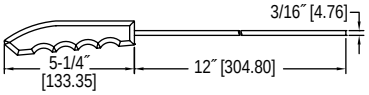

General purpose probe

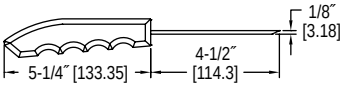

Penetration probe

Dwyer

SERIES LPTK

GAS PRESSURE TEST KIT

Convenient Kit Perfect For Testing LP and Natural Gas Controls

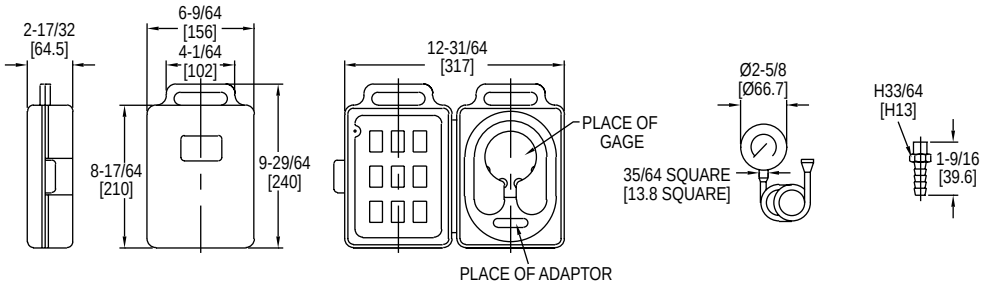

Closed **Open** **Gage and hose** **Adaptor**

The **Series LPTK Gas Pressure Test Kit** is ideal for testing LP and natural gas lines and controls. The kit's gage shows if proper pressure is present or if a leak exists. Series LPTK is easier to use than a manometer and includes a sturdy case for added durability and safe handling.

BENEFITS/FEATURES

- Calibration screw on the back of the gage
- Simple interface for ease of use

APPLICATIONS

- Combustion gas supply monitoring and testing

MODEL CHART	
Model	**Range**
LPTK-01	0 to 15 in w.c. and 0 to 8.6 oz/in^2
LPTK-02	0 to 32 in w.c. and 0 to 18.5 oz/in^2
LPTK-03	0 to 4 kPa and 0 to 40 mbar
LPTK-04	0 to 8 kPa and 0 to 80 mbar
Note: Consult factory for other range options.	

SPECIFICATIONS

Service: Compatible gases.
Wetted Materials: Gage: brass, hose: rubber.
Housing Materials: Steel with black finish.
Lens: Polycarbonate.
Accuracy: ±3% FS.
Pressure Limit: 110% of range.
Temperature Limits: -40 to 150ºF (-40 to 65ºC).
Size: 2-1/2″ (63 mm).
Process Connections: 1/8″ NPT, brass hose barb.
Case: ABS plastic.
Hose: Rubber, 36″ (91.4 cm).
Tube Nipple: Rubber.
Weight: 1.75 lb (0.8 kg).

USA: California Proposition 65
⚠**WARNING:** This product can expose you to chemicals including Lead, which is known to the State of California to cause cancer and birth defects or other reproductive harm. For more information go to www.P65Warnings.ca.gov.

Dwyer

MODEL TAC-L

PORTABLE DIGITAL TACHOMETER

Contact or Photo Non-Contact Operation, Backlit LCD

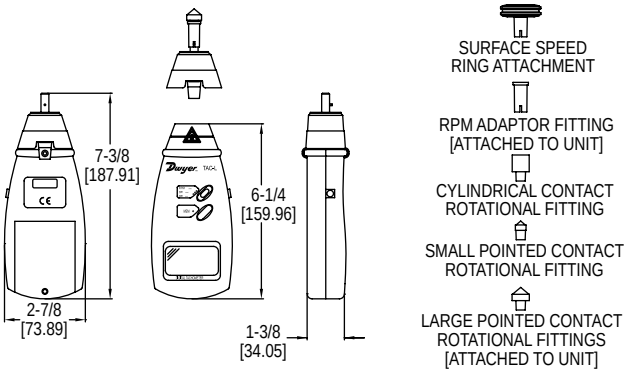

The **Model TAC-L Portable Digital Tachometer** measures rotational speed either by contacting a rotatable head to the shaft of the object or by using a photo sensor to detect the reflections from the laser. The housing is made of a strong, lightweight ABS plastic housing, which is designed to comfortably fit in the hand of the user. Supplied with this model are 3 contact rotational heads, a contact surface wheel, and a protective carrying case.

BENEFITS/FEATURES

- Record from a distance of up to 20 inches due to non-contact operation
- Recall records since the last power off with the memory function
- Get high visibility in dark areas with the large backlit LCD

APPLICATIONS

- HVAC fan motors
- Powder and bulk conveyor belts

SPECIFICATIONS

Range: Non-contact (RPM): 2.5 to 99,999 RPM; Contact (RPM): 0.5 to 19,999 RPM; Surface speed (m/min): 0.05 to 1999.9 m/min.
Accuracy: ±(0.05% + 1 digit).
Display: Backlit LCD; 5 digits, 7 segments, 0.7″ (1.8 cm) H.
Resolution: Non-contact (RPM): 0.1 RPM (2.5 to 999.9 RPM), 1 RPM (1000 to 99,999 RPM); Contact (RPM): 0.1 RPM (0.5 to 999.9 RPM), 1 RPM (1000 to 19,999 RPM); Surface speed (m/min): 0.01 m/min (0.05 to 99.99 m/min), 0.1 m/min (100.0 to 1999.9 m/min).
Non-contact Measuring Distance Range: 2 to 20″ (5 to 50 cm).
Sampling Time: 0.8 s.
Temperature Limits: 32 to 122°F (0 to 50°C).
Power Requirements: (4) 1.5 V AA alkaline batteries, not provided, user replaceable.
Weight: 1.37 lb (.620 kg).

MODEL CHART

Model	Description
TAC-L	Contact/non-contact digital tachometer

OPTIONS

Model	Description
NISTCAL-EL1	NIST traceable calibration certificate

MODEL CSG

CURRENT/VOLTAGE SIGNAL GENERATOR

Ramp Function, Large Numeric LCD Display

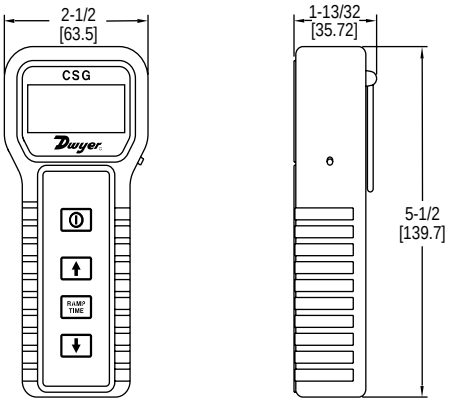

The **Model CSG Current/Voltage Signal Generator** generates a 0-10 VDC signal in increments of 1 V or a 0-20 mA signal in increments of 1 mA. The large LCD features a blue backlight for use in dimly lit areas. Model CSG continuously ramps the output using the user selected minimum, maximum, and ramp interval timing parameters.

BENEFITS/FEATURES
- Large backlit LCD for visibility in dark areas
- Timed ramp function
- Auto shut-off to conserve battery life

APPLICATIONS
- Troubleshooting transmitters and transducers
- Configuring panel meters

SPECIFICATIONS
Impedance: Voltage: 1000 Ω min; Current: 300 Ω max.
Output: 0-20 mA (1 mA increments); 0-10 VDC (1 VDC increments).
Resolution: 1 mA (current); 1 VDC (voltage).
Ramping Time Intervals: 1 to 20 s (1 s increments).
Ambient Operating Temperature: 32 to 122°F (0 to 50°C).
Power Requirements: 9 V alkaline battery, included, user replaceable or 120 VAC (provided).
Auto Power Off: 1 to 20 min.
Electrical Connections: 6´ (1.8 m) with alligator clips.
Weight: 6 oz (170 g).

MODEL CHART	
Model	**Description**
CSG	Current/voltage signal generator

MODEL ASG

ANALOG SIGNAL GENERATOR

Ramp Function, Bar Graph LED, Selectable Auto Shut Off

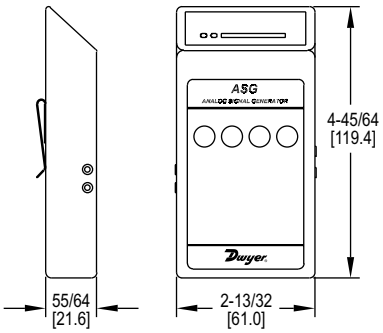

The **Model ASG Analog Signal Generator** generates a 0-10 VDC signal in increments of 1 V or a 4-20 mA signal in increments of 2 mA. An LED bar graph visually indicates the analog signal level. Model ASG will also continuously ramp to user defined maximum and minimum values with user defined ramp interval timing.

BENEFITS/FEATURES
- LED bar graph for visibility in dark areas
- Variable ramp function timing
- Auto shut-off to conserve battery life

APPLICATIONS
- Troubleshooting transmitters and transducer
- Calibrating transducers, displays, and other analog signal devices

SPECIFICATIONS
Impedance: Voltage: 1000 Ω min; Current: 300 Ω max.
Output: 0-20 mA (2 mA increments); 0-10 VDC (1 VDC increments).
Resolution: 2 mA (current). 1 VDC (voltage).
Ramping Time Intervals: 2 to 20 sec (2 sec increments).
Ambient Operating Temperature: 32 to 122°F (0 to 50°C).
Power Requirements: 9 V alkaline battery, installed, user replaceable or 120 VAC (provided).
Auto Shutoff Times: 2 to 20 min. (2 min. increments) (6 min. default).
Electrical Connections: 6´ (1.8 m) with alligator clips.
Weight: 3.2 oz (without battery).

MODEL CHART	
Model	**Description**
ASG	Analog signal generator

Dwyer

MODEL HP

HAND PUMP

Generates Pressures up to 45 psig (3 bar), Single Hand Operation

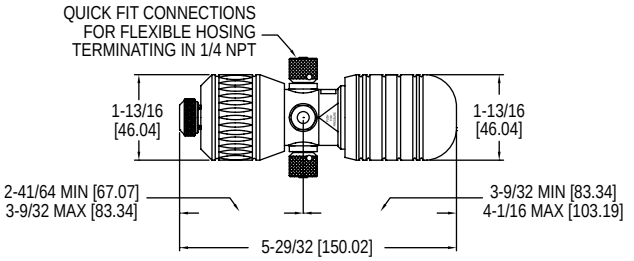

The **Model HP Hand Pump** provides a dual source of pneumatic pressure and vacuum for verifying the calibration of pressure instrumentation. Pump can generate pressures up to 45 psig (3 bar) and vacuum to -27 in Hg (-910 mbar). The compact pump is designed for portability and single hand operation.
Model HP features a pressure relief valve and fine adjustment for control better than 0.0015 psi (0.1 mbar). Pump includes two 39″ (1 m) hoses terminating in 1/4″ female NPT connections and instruction manual.

MODEL CHART	
Model	**Description**
HP-1	Hand pump

ACCESSORIES	
Model	**Description**
HP-1C	Hard case

BENEFITS/FEATURES
- Offers vacuum or positive pressure sourcing
- Compact and portable
- Integral relief valve for fine adjustment
- Reference gage recommendation: DPG-022

APPLICATIONS
- Test instrument calibration
- Pressure switch calibration
- Pressure transmitter calibration

USA: California Proposition 65
⚠**WARNING:** This product can expose you to chemicals including Lead, which is known to the State of California to cause cancer and birth defects or other reproductive harm. For more information go to www.P65Warnings.ca.gov.

SERIES CHP

PNEUMATIC HAND PUMP

Vacuum or Pressure, Ranges up to 100 psig

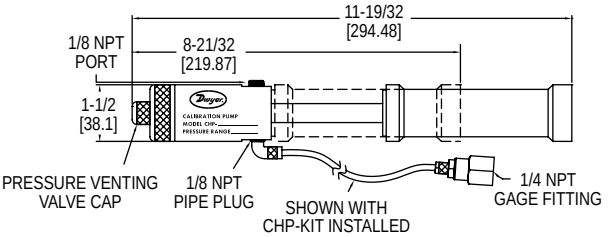

The **Series CHP Pneumatic Hand Pump** is the most dependable and rugged pump for applications up to 100 psi or 28.8 in Hg vacuum. The durable Acetel plastic and anodized aluminum construction prevents body heat transfer, resulting in drift-free, accurate readings. The Series CHP is equipped with oversized check valves in order to provide smooth and controlled operation. Dual O-Rings on all pistons ensure the pump to be leak-free. The unit includes a 2′ L hose, 1/8″ female NPT gage fitting, and 1/8″ NPT pipe plug. An optional hose kit is available so that a tee is not required when connecting a sensor and a calibrator. The Series CHP is ideal for checking calibration of pressure or vacuum gages, switches, or transmitters.

MODEL CHART	
Model	**Description**
CHP-P	Pressure calibration pump
CHP-V	Vacuum calibration pump

ACCESSORIES	
Model	**Description**
CHP-KIT	2′ hose and NPT fitting

BENEFITS/FEATURES
- Offers vacuum or positive pressure sourcing
- Compact and portable
- Integral relief valve for fine adjustment
- Reference gage recommendation: DPG-024

APPLICATIONS
- Test instrument calibration
- Pressure switch calibration
- Pressure transmitter calibration

MODEL A-396A

CALIBRATION PUMP

Generates up to 72 psig, Integral Bleed Fitting

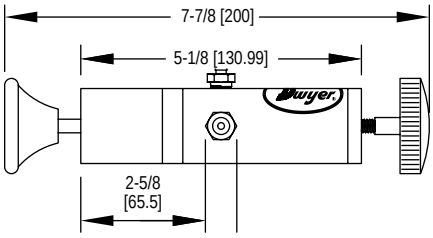

The **Model A-396A Calibration Pump** serves as pressure source to calibrate gages and transmitters or to set pressure switches. Use with manometer or other pressure standard. Includes volume adjuster enabling fine pressure control and bleed valve. Generates pressures from a fraction of an in w.c. to 72 psig (5 bar). Includes barbed fitting, tee connector and three 36˝ lengths of vinyl tubing.

MODEL CHART	
Model	**Description**
A-396A	Calibration pump

BENEFITS/FEATURES
- Offers wide pressure sourcing capability
- Compact and portable
- Integral relief valve for fine adjustment
- Reference gage recommendation: DPG-024

APPLICATIONS
- Test instrument calibration
- Pressure switch calibration
- Pressure transmitter calibration

MODEL A-350

ASPIRATOR BULB

Single Hand Operation, Vacuum or Pressure

The **Model A-350 Aspirator Bulb** can be used to source pressure for calibration and leak checking tests. Simply squeeze the bulb after the tubing is connected to generate pressure. For applications such as our CO2 indicator, the aspirator bulb can be squeezed before inserting the tubing to draw a vacuum to pull the smoke or air from a duct or stack into the gage.

MODEL CHART	
Model	**Description**
A-350	Aspirator bulb

BENEFITS/FEATURES
- Offers vacuum or positive pressure sourcing
- Compact and portable
- Most cost effective option
- Reference gage recommendation: Magnehelic 2010

APPLICATIONS
- Test instrument calibration
- Pressure switch calibration
- Pressure transmitter calibration
- Smoke leak testing

Dwyer

SERIES PCHP

PNEUMATIC CALIBRATION HAND PUMP

Generates up to 600 psi (40 bar), Comfort Grip Handles

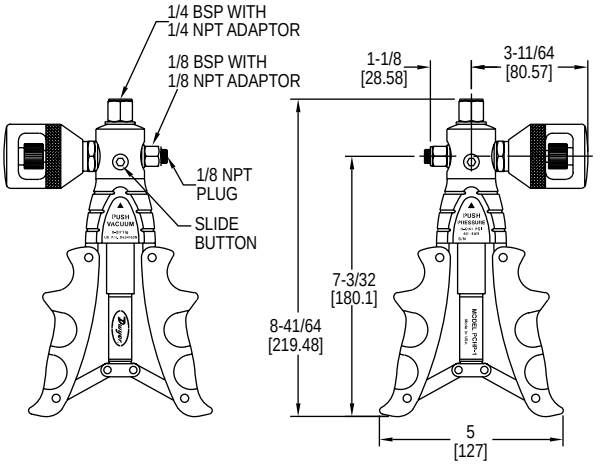

The **Series PCHP Pneumatic Calibration Hand Pump** sources pressure and vacuum to check calibration of gages, switches, transmitters, and recorders. The contoured cushion handles provide extra comfort while preventing the pump from sliding.

FEATURES/BENEFITS
- Oversized check valve maintain smooth operation
- Dual O-rings on pistons ensure no leaks

APPLICATIONS
- Instrument calibration
- Laboratories
- Production areas

SPECIFICATIONS

Output Ranges: -28 in Hg to 600 psi (-0.945 to 40 bar).
Process Connection: 1/4″ NPT/BSP.
Gage Connection: 1/8″ NPT/BSP.
Materials: SS fittings, anodized aluminum housing, plastic/rubber handles, and nitrile O-rings.
Weight: 2 lb (0.91 kg).

MODEL CHART

Model	Description
PCHP-1	Pneumatic calibration hand pump
PCHP-1K	Pneumatic calibration hand pump with hose kit

ACCESSORIES

Model	Description
PCHP-HK	High pressure hose

SERIES HCHP

HYDRAULIC CALIBRATION HAND PUMP

Triple Filtration, Generates Pressure up to 10,000 psi (700 bar)

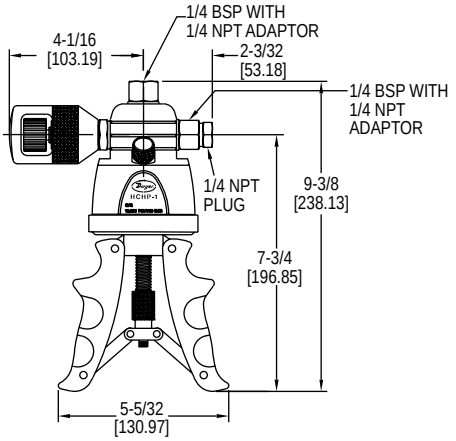

The **Series HCHP Hydraulic Calibration Hand Pump** utilizes a fully adjustable stroke control that allows for quick priming, easy pumping, and fast pressure generation up to 10,000 psi (700 bar). The ergonomically engineered handles provide extra comfort, while the triple filtration system ensures pump operation in spite of dirty conditions.

FEATURES/BENEFITS
- Oversized check valve maintain smooth operation
- Shatterproof reservoir and stainless steel construction guarantee no leaks

APPLICATIONS
- Instrument calibration
- Laboratories
- Production areas

SPECIFICATIONS

Output Ranges: 0 to 10,000 psi (0 to 700 bar).
Process Connection: 1/4″ NPT/BSP.
Gage Connection: 1/4″ NPT/BSP.
Materials: SS, polyurethane, anodized hard-coat aluminum, PTFE, and nitrile.
Weight: 3 lb (1.36 kg).

MODEL CHART

Model	Description
HCHP-1	Calibration hand pump
HCHP-1K	Calibration hand pump with hose kit

ACCESSORIES

Model	Description
HCHP-1F	Spare washer and filter kit

Dwyer

SERIES BCHP

LOW PRESSURE CALIBRATION PUMP

Vacuum or Pressure, Generates up to 870 psi (60 bar)

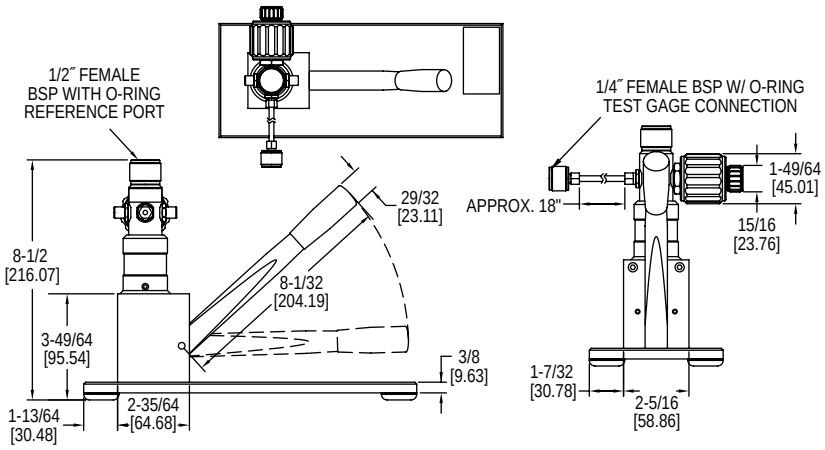

The **Series BCHP Low Pressure Calibration Pump** is able to generate pressure and vacuum for adjusting or calibrating pressure gages, transmitters, or switches. The pump is hand operated and has a pneumatic pressure range of -28 to 870 psi (-0.95 to 60 bar).

BENEFITS/FEATURES

- Dual pressure ports for ease of use
- Fine adjustment valve ensures precise measurements

APPLICATIONS

- Instrument calibration
- Laboratories
- Production areas

MODEL CHART	
Model	**Description**
BCHP-1	Calibration test pump
BCHP-KIT	Test pump with 1/4˝ NPT connections, fine volume adjustment tool and case

ACCESSORIES	
Model	**Description**
A-BCHP-CASE	Case for BCHP-1
A-BCHP-NPT	1/4˝ BSP to 1/8˝ NPT, 1/4˝ NPT, 3/8˝ NPT and 1/2˝ NPT converter set for test connection
A-BCHP-VAT	Fine volume adjustment tool

SPECIFICATIONS
Media: Air.
Output Ranges: -28 in Hg to 870 psi (-0.95 to 60 bar).
Process Connections: 1/4˝ female BSP.
Gage Connection: 1/2˝ female BSP.
Materials: Anodized aluminum, brass, and ABS.
Weight: 8.4 lb (3.8 kg).

USA: California Proposition 65
⚠**WARNING:** This product can expose you to chemicals including Lead, which is known to the State of California to cause cancer and birth defects or other reproductive harm. For more information go to www.P65Warnings.ca.gov.

Dwyer

SERIES DW-USB

COMPACT USB DATA LOGGER

Measure Temperature, Humidity, Dew Point, Current, Voltage, or Carbon Monoxide

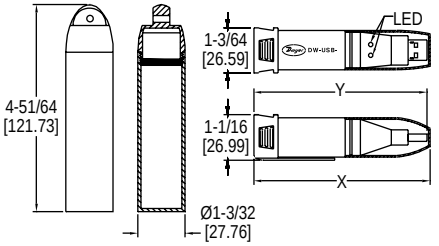

Model DW-USB-CASE Model DW-USB-X

Model	Overall Length (X)	Overall Length (Y)	Body/Clip	Cap	LED
DW-USB-1	3-55/64″	3-55/64″	Standard	Standard	Clear/red
DW-USB-2, -2-HA	4-1/16″	4-1/16″	Vented	Standard	Clear/clear
DW-USB-3	4-27/64″	4-27/64″	Standard	Black tip term block	Red/green
DW-USB-4	4-27/64″	4-27/64″	Standard	Blue tip term block	Red/green
DW-USB-5, -5-LR	4-59/64″	4-59/64″	Vented	Red tip CO sensor	Red/green
DW-USB-6	4-21/32″	4-21/32″	Standard	Standard	Red/green

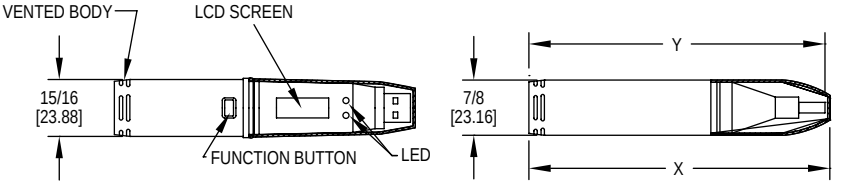

Model	Overall Length (X)	Overall Length (Y)	Body/Clip	Cap	LED
DW-USB-1-LCD	4-21/32″	4-41/64″	Standard	Transparent	Red/green
DW-USB-2-LCD	4-31/32″	4-57/64″	Vented	Transparent	Red/green
DW-USB-2-HA-LCD	4-31/32″	4-57/64″	Vented	Transparent	Red/green
DW-USB-6-LCD	5-19/64″	5-15/64″	Plug in bottom	Transparent	Red/green

The **Series DW-USB Compact USB Data Logger** allows users to monitor temperature, humidity, dew point, voltage, current, or carbon monoxide almost anywhere, and then download stored data by simply plugging the module directly into a PC's USB port. The compact housing can resist moisture up to IP67 when the protective cap is attached and has built-in LEDs to indicate an alarm has been met or the battery is low. Users can set the sampling rate, start time, high/low alarms, and temperature unit via software available for free download from our website.

BENEFITS/FEATURES

- Meets IP67 standards when the protective cap is fitted
- All in one unit plugs into PC with no cable required
- LED status indicators for visual confirmation
- Optional integral LCD display for local indication

APPLICATIONS

- Calibration labs
- Environmental chambers
- Pharmaceutical plants
- Storage warehouses

SPECIFICATIONS

Memory Size: 16,382 temperature; 16,382 each temperature and RH; 32,764 readings for voltage, current, and thermocouple; and 32,510 for carbon monoxide.
Sampling Mode: Stop on memory full.
Sampling Rate: Selectable from 10 s to 12 hr (temperature and RH models); 1 s to 12 hr (voltage, current, and thermocouple models); 10 s to 5 m (CO models).
Computer Requirements: Compatible with Windows® 7, Windows® 8, and Windows® 10.
Power Requirements: 3.6 V 1/2 AA lithium metal battery, included, user-replaceable.
Housing: ABS plastic blend.
Alarms: Programmable high/low.
Interface: USB port.
Weight: 1.5 oz (43 g).

MODEL CHART

Model	Sensor Type	Range	Accuracy	Resolution
DW-USB-1	Temperature	-31 to 176°F (-35 to 80°C)	±3°F (±1.5°C)	1°F (0.5°C)
DW-USB-2	Temperature/humidity/dew point	-31 to 176°F (-35 to 80°C), 0 to 100% RH	±4°F (2°C), ±3% RH from 20 to 80% RH, ±5% RH	1°F (0.5°C), 0.5% RH
DW-USB-2-HA	Temperature/humidity/dew point	-31 to 176°F (-35 to 80°C), 0 to 100% RH	±3°F (1.5 °C), ±2% RH from 20 to 80% RH, ±4% RH	1°F (0.5°C), 0.5% RH
DW-USB-3	Voltage	0-30 VDC	±1%	50 mVDC
DW-USB-4	Current	4-20 mA	±1%	0.05 mA
DW-USB-5	Carbon monoxide	0 to 1000 PPM	±6% of reading	0.5 PPM
DW-USB-5-LR	Carbon monoxide	0 to 300 PPM	±4% of reading	0.5 PPM
DW-USB-6	External thermocouple	With supplied probe: 32 to 752°F (0 to 400°C) J-type: -202 to 1652°F (-130 to 900°C); K-type: -328 to 2372°F (-200 to 1300°C); T-type: -328 to 662°F (-200 to 350°C)	±2°F (1°C) (for data logger only)	1°F (0.5°C)
DW-USB-1-LCD	Temperature	-31 to 176°F (-30 to 80°C)	±3°F (1.5°C)	1°F (0.5°C)
DW-USB-2-LCD	Temperature/humidity/dew point	-31 to 176°F (-35 to 80°C), 0 to 100% RH	±4°F (2°C), ±3% RH from 20 to 80% RH, ±5% RH	1°F (0.5°C), 0.5% RH
DW-USB-2-HA-LCD	Temperature/humidity/dew point	-31 to 176°F (-35 to 80°C), 0 to 100% RH	±3°F (1.5 °C), ±2% RH from 20 to 80% RH, ±4% RH	1°F (0.5°C), 0.5% RH
DW-USB-6-LCD	External Thermocouple	With supplied probe: 32 to 752°F (0 to 400°C) J-type: -202 to 1652°F (-130 to 900°C) K-type: -328 to 2372°F (-200 to 1300°C) T-type: -328 to 662°F (-200 to 350°C)	±2°F (1°C) (for data logger only)	1°F (0.5°C)

ACCESSORIES

Model	Description
1718-0077	Remote temperature probe handle
1818-0074	Immersion temperature probe
1818-0078	Penetration temperature probe
1818-0082	Surface temperature probe
1818-0085	Air duct temperature probe

Windows® is a registered trademark of Microsoft Corporation

Dwyer

SERIES DLI2

LCD PRESSURE DATA LOGGER

1/4″ NPT Fitting, Records 262,143 Readings, Front Keypad

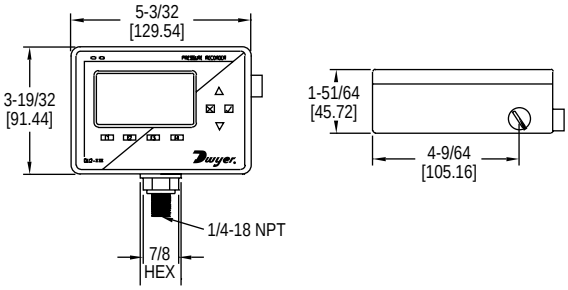

The **Series DLI2 LCD Pressure Data Logger** accurately records pressure and gives instant remote readings. The large, back-lit LCD and 8-button keypad provide convenient access to current data and recorder setup as well as memory and battery levels. The Series DLI2 can be ordered for absolute or gauge pressure measurements up to 5,000 psi. Using the keypad or software, measurements can be read in psi, in. Hg, mm Hg, bar, atm, Torr, Pa, kPa, or MPa. The large memory capacity allows over 260,000 readings to be stored. The easy to use DL700 software makes creating permanent records, performing data calculations, and graphing of data simple. The DLI2 can easily be started and stopped from a PC or delayed to start up to six months in advance. It can also stop recording at a specific time or after a certain number of readings have been taken.

BENEFITS/FEATURES
- Efficient data capture tool to review processes are running correctly or to analyze alarm and out-of-spec conditions
- Intuitive keypad interface allows easy set-up
- PC start and stopping allows centralized control of data collection

APPLICATIONS
- Building automation
- Clean room
- Operating rooms
- Process applications
- Labs
- Regulated environments

SPECIFICATIONS

Ranges: 0 to 30 psia (g), 0 to 100 psia (g), 0 to 300 psia (g), 0 to 500 psia (g), 0 to 1000 psia, and 0 to 5000 psia depending on the model.
Memory Size: 262,143 readings.
Accuracy: 2% FSR, 0.25% at 77°F (25°C) typical.
Resolution: 0.002 psi (30 psi), 0.005 psi (100 psi), 0.02 psi (300 psi), 0.05 psi (500 and 1000 psi), and 0.2 psi (5000 psi) depending on model.
Sampling Method: Stop on memory full or continuous recording.
Sampling Rate: Selectable from 2 s to 12 hrs.
Computer Requirements: Windows® 95, Windows® 98, Windows® 2000, Windows® ME, Windows NT®, or Windows® XP operating system, and one free USB port.
Power Requirements: (6) AA alkaline batteries, installed functional, user replaceable.
Battery Life: 1 yr (approx).
Interface: USB port (interface cable required).
Housing Material: Black anodized aluminum case.
Wetted Material: 316L SS.
Enclosure Rating: IP65.
Weight: 40 oz (1134 g).

MODEL CHART

Model	Pressure Range	Model	Pressure Range
DLI2-A08	0 to 30 psia	**DLI2-G13**	0 to 300 psig
DLI2-G08	0 to 30 psig	**DLI2-A14**	0 to 500 psia
DLI2-A10	0 to 100 psia	**DLI2-G14**	0 to 500 psig
DLI2-G10	0 to 100 psig	**DLI2-A15**	0 to 1000 psia
DLI2-A13	0 to 300 psia	**DLI2-A19**	0 to 5000 psia

ACCESSORIES

Model	Description
DL700	Software, manual and USB interface cable

Windows®, Windows NT®, and Windows Vista® are registered trademarks of Microsoft Corporation.

SERIES DLP

PRESSURE/TEMPERATURE DATA LOGGER

1/4″ NPT Fitting, Up to 5000 psia

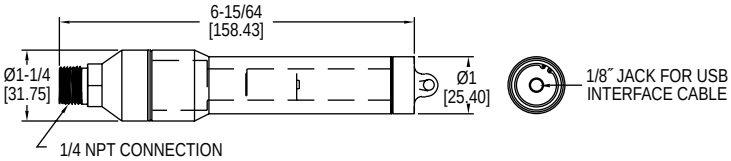

The **Series DLP Pressure/Temperature Data Logger** can record pressure and temperature. The 1/4″ NPT fitting comes standard and allows the logger to be adapted to almost any pressure fitting. The internal temperature sensor provides accurate temperature measurements without the need of a separate temperature recorder, and many of the models provide a choice between measuring pressure in psia or psig. The DLP can easily be started and stopped from a PC or delayed to start up to six months in advance. The battery-powered data logger can store over 16,000 measurements per channel, and the easy to use DL700 software makes retrieving data simple.

BENEFITS/FEATURES
- Efficient data capture tool to review processes are running correctly or to analyze alarm and out-of-spec conditions
- Battery-powered reduces need to hard wire power allowing device to be used in a as a tool in a variety of in-and-out testing
- PC start and stopping allows centralized control of data collection

APPLICATIONS
- Building automation
- Clean room
- Operating rooms
- Process applications
- Labs
- Regulated environments

SPECIFICATIONS

Range: Temperature: -40 to 176°F (-40 to 80°C); Pressure: 0 to 30 psia(g), 0 to 100 psia(g), 0 to 300 psia(g), 0 to 500 psia(g), 0 to 1000 psia, and 0 to 5000 psia depending on the model.
Memory Size: 16,383 readings per channel.
Accuracy: Temperature: ±0.9°F (±0.5°C); Pressure: 2% FSR, 0.25% at 77°F (25°C) typical.
Resolution: Temperature: 0.2°F (0.1°C); Pressure: 0.002 psia(g), 0.005 psia(g), 0.05 psia(g), 0.05 psia, and 0.2 psia depending on the model.
Sampling Method: Stop on memory full.
Sampling Rate: Selectable from 2 s to 12 hrs.
Computer Requirements: Windows® 95, Windows® 98, Windows® 2000, Windows® ME, Windows NT®, and Windows® XP operating system, one free USB port.
Power Requirements: 3.6 V TL2150 lithium metal battery, installed functional, user replaceable.
Battery Life: 1 yr (approx).
Interface: USB port (interface cable required).
Material: 303 SS.
Weight: 12 oz (340 g).

MODEL CHART

Model	Pressure Range	Model	Pressure Range
DLP-A08	0 to 30 psia	**DLP-G13**	0 to 300 psig
DLP-G08	0 to 30 psig	**DLP-A14**	0 to 500 psia
DLP-A10	0 to 100 psia	**DLP-G14**	0 to 500 psig
DLP-G10	0 to 100 psig	**DLP-A15**	0 to 1000 psia
DLP-A13	0 to 300 psia	**DLP-A19**	0 to 5000 psia

ACCESSORIES

Model	Description
DL700	Software, manual and USB interface cable
TL-2150	Replacement battery for Series DLP

Windows® is a registered trademark of Microsoft Corporation

Dwyer

MODEL HTDL-20/30

HIGH TEMPERATURE DATA LOGGER

Submersible, Continuous Recording, User Replaceable Battery

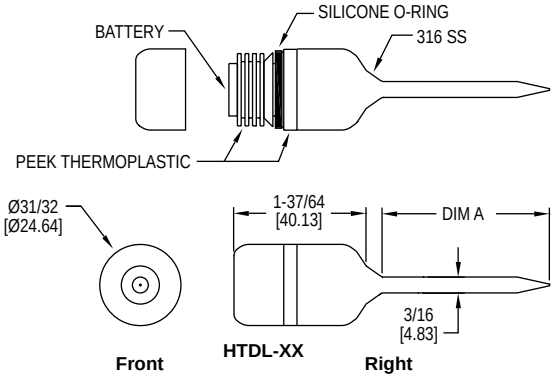

The **Model HTDL-20/30 High Temperature Data Logger** can measure temperatures up to 500°F (260°C) and record up to 65,536 measurements.

BENEFITS/FEATURES

- Submersible and portable
- Temperature measurement up to 500°F
- Log readings in ovens or chambers with the remote probe option
- Delay startup timer

APPLICATIONS

- Thermal testing
- Process monitoring or troubleshooting

MODEL CHART	
Model	**Description**
HTDL-20	High temperature data logger with 2″ rigid probe
HTDL-30	High temperature data logger with 24″ flexible probe

ACCESSORIES	
Model	**Description**
ER1425S-HT	Replacement battery
HTDL-DS	Docking station and USB interface

SPECIFICATIONS
Range: -328 to 500°F (-200 to 260°C).
Memory Size: 65,536 readings.
Accuracy: 0.18°F (0.1°C) @ 68 to 284°F (20 to 140°C); 0.54°F (0.3°C) @ -4 to 67.98°F (-20 to 19.99°C); 0.72°F (0.4°C) @ -40 to -4°F (-40 to –20°C).
Resolution: 0.02°F (0.01°C).
Temperature Limits: -40 to 284°F (-40 to 140°C).
Sampling Method: Stop on memory full or continuous recording.
Sampling Rate: Selectable from 1 s to 24 hrs.
Computer Requirements: Windows XP SP3 or later.
Power Requirements: 3.6 V 1/2 AA ER14250SM lithium metal battery, installed functional, user replaceable.
Battery Life: 1 year (approx).
Interface: Docking station and USB cable.
Housing Material: 316 SS.
Weight: 4.2 oz (120 g).

Windows® is a registered trademark of Microsoft Corporation

Dwyer

MODEL BDL

BUTTON DATA LOGGER

Self-Powered, Compact Size, USB Interface

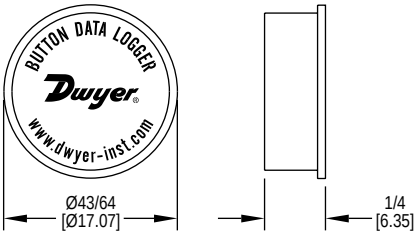

The **Series BDL Button Data Logger** records temperature and humidity in applications where size and cost effectiveness are vital. Housed in a compact stainless steel case, the BDL is durable in hostile environments, while also being able to be inserted in small items and packages. The Series BDL-K logger kit includes 2 buttons, 2 magnets, an interface cable, and a plastic button holder.

BENEFITS/FEATURES

- Compact to fit in small areas and durable to work in hostile environments
- Self-powered unit gives no need for external power supply
- Magnetic mounting for quicker installation

APPLICATIONS

- Food processing verification
- Pharmaceutical storage
- HVAC system testing and balancing
- Transportation of temperature sensitive goods

MODEL CHART

Model	Input Type	Kit
BDL-K1	Temperature	Yes
BDL-K2	Temperature/humidity	Yes

ACCESSORIES

Model	Description
BDL-1	Temperature input data logger, no kit
BDL-2	Temperature/humidity input data logger, no kit
BDL-CLIP	Plastic button holder (5 pk)
BDL-SIL	Weatherproof silicone housing (5 pk)
BDL-WALL	Wall mounting bracket (5 pk)
DL500**	Full version Windows® operating system software key
DL500-LITE*	Lite version Windows® operating system software

*Free download from website. **Need lite version also.

SPECIFICATIONS

Range: BDL-1: -40 to 185°F (-40 to 85°C); BDL-2: -4 to 185°F (-20 to 85°C), 0 to 100% RH.
Memory Size: BDL-1: 2048 readings; BDL-2: 4096 temperature and 4096 humidity readings (low resolution), 2048 temperature and 2048 humidity readings (high resolution).
Accuracy: BDL-1: ±1.5°F (±1°C) from -22 to 158°F (-30 to 70°C); BDL-2: ±0.9°F (±0.5°C) from 14 to 158°F
(-10 to 70°C), ±5% RH.
Resolution: BDL-1: 8 bit; BDL-2: 8 or 11 bit.
Sampling Method: Stop on memory full or continuous recording.
Sampling Rate: BDL-1: Selectable from 1 to 255 min.; BDL-2: Selectable from 1 s to 24 hrs.
Computer Requirements: Windows® 98, Windows® 2000, Windows® ME, Windows NT®, Windows® XP, and Windows Vista® operating system with 16 MB RAM, one free USB port.
Power Requirements: 3 V lithium metal battery, internal, non-replaceable.
Battery Life: BDL-1: 10 years (approx); BDL-2: 5 years (approx).
Alarms: Programmable high/low.
Interface: USB port (cable included with kits).
Housing Material: 305 SS.
Weight: 0.14 oz (4 g).

Windows®, Windows NT®, and Windows Vista® are registered trademarks of Microsoft Corporation

Dwyer

SERIES DW-WIFI

WIRELESS WI-FI DATA LOGGER

Measures Temperature/Humidity, Integral LCD

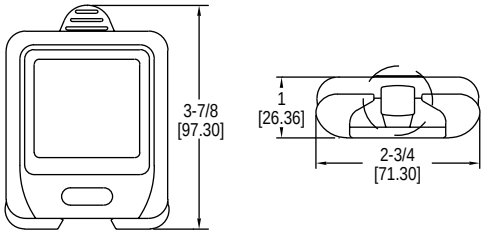

The **Series DW-WIFI Wireless Wi-Fi Data Logger** measures and records up to 1,000,000 temperature and/or humidity readings and shares the data with any PC or server on the same Wi-Fi network. If the Wi-Fi connection is lost, the sensor will continue to store any records until it can regain communication with the network. The downloadable Windows® based software allows users to set high/low alarms, sampling rate, and the temperature scale.

BENEFITS/FEATURES

- Continues to record values even if Wi-Fi connection is lost
- Able to record up to 1,000,000 data points, which can be downloaded to a PC
- Large LCD allows users to view data directly from unit

APPLICATIONS

- Building/site monitoring
- Environment monitoring
- Weather monitoring

SPECIFICATIONS

Memory Size: 1,000,000 readings; 500,000 each for DW-WIFI-TH(-HA).
Sampling Mode: Continuous recording.
Sampling Rate: Selectable from 10 s to 12 hr.
Transmission Rate: Selectable from 1 min to 24 hr.
Temperature Limits: -4 to 140°F (-20 to 60°C).
Power Requirements: 3.7 V lithium ion battery, installed functional, factory replaceable (cable for charging included).
Alarms: Programmable high/low.
Interface: Wi-Fi connection.
Probe Length: DW-WIFI-TP: 11.8″ (30 cm); DW-WIFI-TC: 59″ (150 cm).
Weight: 7.2 oz (204 g).

MODEL CHART

Model	Input	Range	Accuracy (Typ.)	Display Resolution
DW-WIFI-T	Internal temperature	-4 to 140°F (-20 to 60°C)	±1.0°F (±0.5°C) @ 14 to 122°F (-10 to 50°C)	0.1°F (0.1°C)
DW-WIFI-TH	Internal temperature/humidity	-4 to 140°F (-20 to 60°C), 0 to 100% RH	±0.6°F (±0.3°C) @ 41 to 140°F (5 to 60°C) ±2.5% RH @ 20 to 80% RH	0.5°F (0.5°C) 1.0% RH
DW-WIFI-TP	Remote temperature probe	-40 to 257°F (-40 to 125°C)	±1.2°F (±0.6°C) @ 14 to 158°F (-10 to 70°C)	0.1°F (0.1°C)
DW-WIFI-TC	Remote thermocouple	-454 to 2372°F (-270 to 1300°C)*	±3.0°F (1.5°C)	0.1°F (0.1°C)
DW-WIFI-T-HA	Internal temperature	-4 to 140°F (-20 to 60°C)	±0.2°F (±0.1°C) @ 14 to 140°F (-10 to 60°C)	0.1°F (0.01°C)
DW-WIFI-TH-HA	Internal temperature/humidity	-4 to 140°F (-20 to 60°C), 0 to 100% RH	±0.4°F (±0.2°C) @ 41 to 140°F (5 to 60°C) ±2.5% RH @ 10 to 90% RH	0.5°F (0.5°C) 1.0% RH
DW-WIFI-TP-HA	Remote temperature probe	-40 to 257°F (-40 to 125°C)	±0.2°F (±0.1°C) @ 14 to 158°F (-10 to 70°C)	0.01°F (0.01°C)

*Probe dependent.

SELECTION GUIDE
pages 202-203

TYPICAL APPLICATIONS
pages 204-205

Flow Sensors
pages 206-212

Fume Hood Monitors
page 213

Air Flow Switches
pages 213-214

Air Velocity Transmitters
pages 215-219

Humidity Switches
page 220

Humidity/Temperature Transmitters
pages 221-226

Carbon Dioxide Transmitters
pages 226-230

Gas Sensing Transmitters
pages 231-232

Smoke Detectors
page 233

Occupancy Sensors
page 234

FEATURED PRODUCTS

AIR VELOCITY TRANSMITTER

SERIES 641 | page 218

- Compact durable metal housing
- Digital filter for signal damping

DUCT SMOKE DETECTOR

SERIES SL-2000 | page 233

- Versatile installation applications with velocities up to 4000 FPM
- Simple installation with no tools required to load/remove sampling tubes

CARBON MONOXIDE/NITROGEN DIOXIDE GAS TRANSMITTERS

SERIES GSTA & GSTC | page 231

- Industrial grade replaceable sensors
- Field selectable output

OCCUPANCY SENSOR

SERIES OSC-200 | page 234

- Built in delay to suppress switch activation during momentary occupancy
- Reduce operating costs when no one is present

Dwyer

AIR VELOCITY
Transmitters

SERIES	AVUL - page 215	AVPT - page 216	AVLV - page 217	641* - page 218	641RM* - page 219	641B - page 219
Service	Clean air	Clean air	Clean air	Clean air	Clean air	Clean air
Range	1,000 to 4,000 FPM (5 to 20 MPS)	1,000 to 4,000 FPM (5 to 20 m/s)	100 to 400 FPM (0.5 to 2 m/s)	250 to 15000 FPM (1.25 to 75 MPS)	250 to 2000 FPM (1.25 to 10 MPS)	250 to 2000 FPM (1.25 to 10 MPS)
Accuracy	±3 or 5% of reading	±3 or 5% of reading	±1 or 2% of reading	±3 to 4% FS	±3 to 4% FS	±5 to 6% FS
Mounting	Duct mount	Duct mount	Duct mount	Duct mount	Remote mount	Duct mount
Probe Length	7-41/64″	6″ or 12″	7-41/64″	6 to 36″ (152 to 915 mm)	6 to 36″ (152 to 915 mm)	4-1/4″ (108 mm)
Output	4-20 mA, 0-5 VDC, or 0-10 VDC selectable	0-5 VDC or 0-10 VDC	4-20mA, 0-5 VDC, or 0-10 VDC selectable	4-20 mA	4-20 mA	4-20 mA
Display	Optional LCD	None	Optional LCD	Optional LED	Optional LED	Optional LED
Process Temperature Limits	32 to 122°F (0 to 50°C)	-4 to 140°F (-20 to 60°C)	-32 to 122°F (0 to 50°C)	-40 to 212°F (-40 to 100°C)	-40 to 212°F (-40 to 100°C)	-40 to 176°F (-40 to 80°C)

HUMIDITY AND HUMIDITY/TEMPERATURE
Transmitters

SERIES	RHP-E/N* - page 221	RHPLC - page 222	RHP* - page 223	RHP with Shield - page 224	WHT - page 224
Service	Room	Room	Duct or outdoor	Outdoor	Room or outdoor
Accuracy	±2, 3, or 5% FS	± 2 or 3% FS	±2, 3, or 5% FS	±2, 3, or 5% FS	±3% FS
RH Output	4-20 mA, 0-5 VDC, 0-10 VDC	4-20mA, 0-5 VDC, 0-10 VDC	4-20 mA, 0-5 VDC, 0-10 VDC	4-20 mA, 0-5 VDC, 0-10 VDC	4-20 mA, 0-5 VDC, 0-10 VDC
Temperature Output Options	None, passive sensor, 4-20 mA, 0-5 VDC, 0-10 VDC	None, passive sensor, 4-20mA, 0-5 VDC, 0-10 VDC	None, passive sensor, 4-20 mA, 0-5 VDC, 0-10 VDC	None, passive sensor, 4-20 mA, 0-5 VDC, 0-10 VDC	None, passive sensor, 4-20 mA, 0-5 VDC, 0-10 VDC
Display	Optional LCD	None	None	None	None

***CALIBRATION SERVICES AVAILABLE**

These Selection Guides are for quick comparison of similar products. Please refer to the catalog page number referenced for complete product information and specifications.

CARBON MONOXIDE
Sensors

SERIES	GSTA - page 231	GSTC - page 231	CMT200 - page 232	CMS300 - page 232
Service	Carbon monoxide or nitrogen dioxide	Carbon monoxide or nitrogen dioxide	Carbon monoxide	Carbon monoxide
Range	0 to 500 PPM CO or 0 to 10 PPM NO_2	0 to 500 PPM CO or 0 to 10 PPM NO_2	0 to 200 PPM CO	0 to 300 PPM CO
Housing	Space or duct	Space or duct	Space	Space
Output	4-20 mA, 0-5 VDC, 1-5 VDC, 0-10 VDC, 2-10 VDC	BACnet MS/TP, Modbus® RTU, Modbus® ASCII	4-20 mA, 2-10 VDC	4-20 mA, 2-10 VDC
Relay	None	N/A	N/A	(1) SPDT
Display	Optional LCD	Optional LCD	N/A	N/A

HUMIDITY AND HUMIDITY/TEMPERATURE
Transmitters

SERIES	RH-R - page 225	657* - page 225	657C* - page 225	HHT - page 226
Service	Duct or process	Duct	Duct	Room or outdoor
Accuracy	±2% FS	±2% FS	±2% FS	±2% FS
RH Output	4-20 mA	4-20 mA	4-20 mA	4-20 mA
Temperature Output Options	None, 4-20 mA	4-20 mA	4-20 mA	None, 4-20 mA
Display	None	None	None	Optional LCD

Modbus® is a registered trademark of Schneider Automation, Inc.

***CALIBRATION SERVICES AVAILABLE**

These Selection Guides are for quick comparison of similar products. Please refer to the catalog page number referenced for complete product information and specifications.

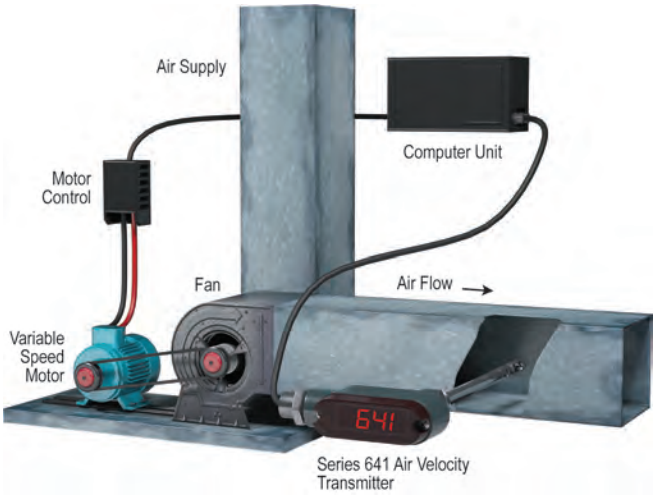

Dwyer® transmitter signals precise air velocity adjustments to computer-controlled variable-speed fan motor

In variable air volume (VAV) HVAC systems, a computerized control provides precise adjustment of air volume to meet changing system needs with maximum energy efficiency. The Dwyer® Series 641 has an optional LED display for local indication of air flow. The LED display provides a quick, visual acknowledgment of proper system performance. The computer reacts to any change in velocity by signaling the motor control to increase or decrease fan speed to maintain the required velocity. The computer, taking inputs from other ambient condition sensors, will establish a new required air velocity and signal an appropriate adjustment in fan speed.

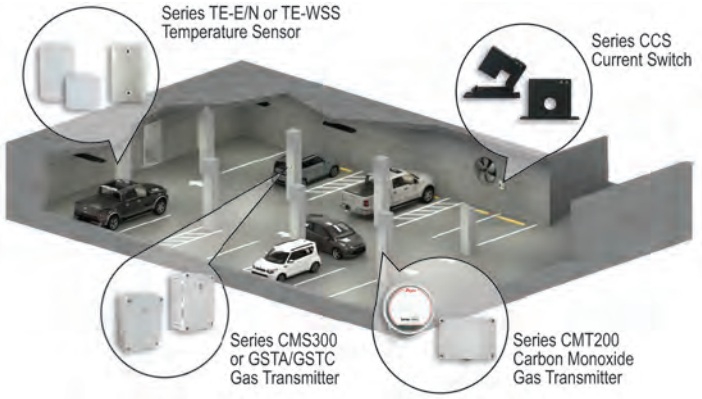

Automate your garage ventilation

Carbon monoxide and nitrogen dioxide are by-products released in the exhaust from gasoline and diesel powered vehicles. These gases can build up in parking garages and loading dock areas where vehicles are concentrated, creating a potentially harmful environment. Ventilation is required to purge these gases, but running fans non-stop increases building operating costs. The Dwyer® Series GSTA and GSTC can help to offer a more efficient solution to garage ventilation by transmitting CO or NO_2 concentrations via an analog output signal or digital BACnet/Modbus® communication. This signal is sent to the building management system and the ventilation processes can then be automated to run only when the gases are present in dangerous concentrations. For stand-alone systems, the analog signal can be sent to a Series SCD process controller to provide a closed loop control system running the ventilation fans. Using the Dwyer® Series GSTA or GSTC transmitter, ventilation will occur only when needed, reducing the cost of maintaining air quality standards.

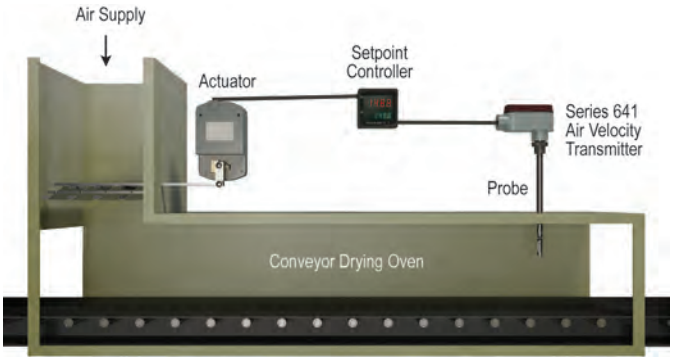

Air velocity transmitter controls drying oven air flow

The flow of heated air is held to a constant predetermined velocity in this carefully controlled low temperature process drying oven. The constant temperature air supply is modulated by a set of inlet louvers operated by a servo-driven actuator. A Dwyer® Series 641 air velocity transmitter has an optional LED display for local indication of air flow. The LED display provides a quick, visual acknowledgment of proper system performance. The controller compares the Series 641's signal to the set point in the controller and continuously signals appropriate louver adjustments to the actuator.

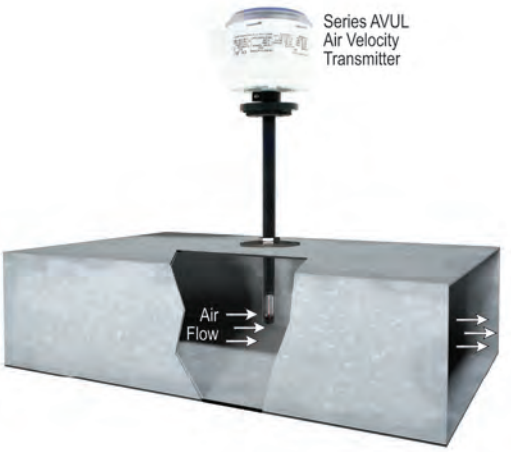

Eliminate the need for Pitot tubes, orifice plates, differential pressure sensors and temperature sensors with a Series AVUL

Installing air velocity measurement systems can be a burdensome process – specifying Pitot tubes, static pressure tips, orifice plates, differential pressure transmitters, etc. Dwyer offers the Series AVUL air velocity transmitter to consolidate these components into one convenient instrument. The Series AVUL can be easily installed into the duct or air stream to accurately measure air flow while providing local indication as well as linear analog output. Microprocessor-based technology ensures accurate, repeatable results. The Series AVUL combines these features for simple, reliable airflow measurement without the problems associated with complex, traditional systems.

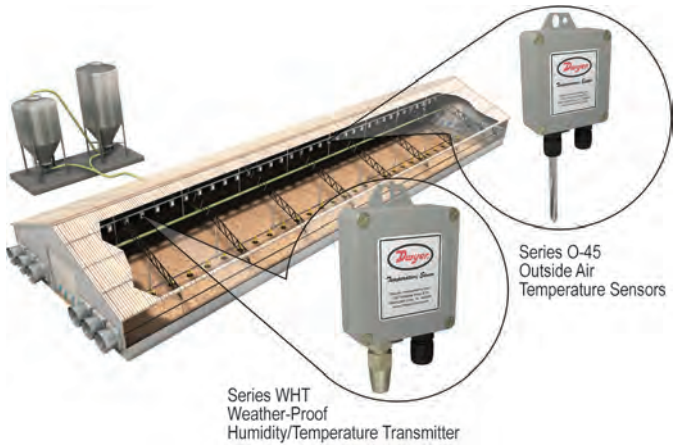

Temperature and humidity measurements used to optimize the growth of hogs and poultry

The Dwyer® Series WHT humidity transmitter and Series O-4 temperature sensors are used to control the environmental conditions on hog and poultry farms. The amount the animals eat is linked to how comfortable the environmental conditions are. Thus the temperature, humidity, amount of light and other ambient conditions are tightly controlled to insure optimal animal growth.

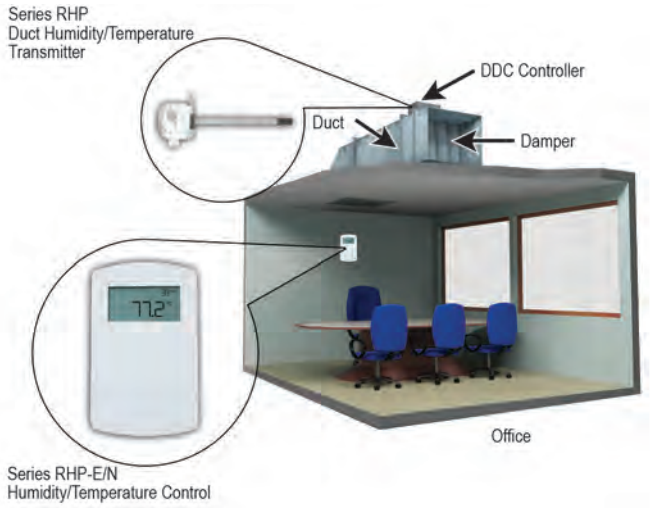

Accurately measure and control the humidity and temperature in office buildings

The Dwyer® Series RHP-E/N wall mount humidity and temperature transmitter can be combined with a DDC controller and a damper to provide comfortable working conditions in an office building. The amount of air flow entering the room is varied based on the temperature and humidity readings of the Series RHP-E/N. The compact size and mounting configuration allow this transmitter to be discretely mounted in any room.

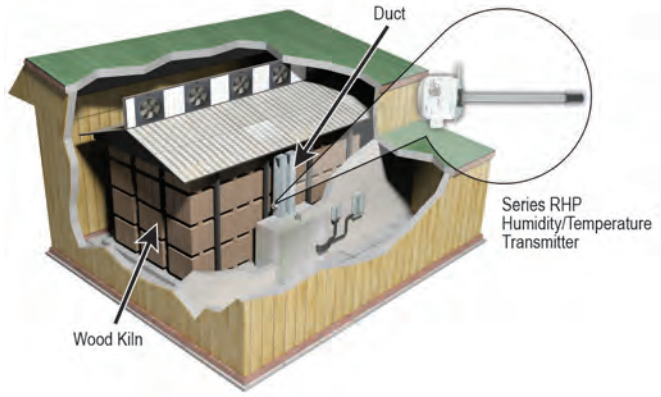

Greatly reduce the time it takes to dry wood

The Dwyer® Series RHP monitors the humidity and temperature in the return air ducts in wood dehumidification rooms. Large fans are used to circulate air across the room. As dry conditioned air moves across the wood, it absorbs moisture from the wood. The humidity level of the air in the return air duct is representative of how much moisture is in the wood. When the humidity in the duct declines, it signifies that less dry conditioned air is needed to be supplied to the room.

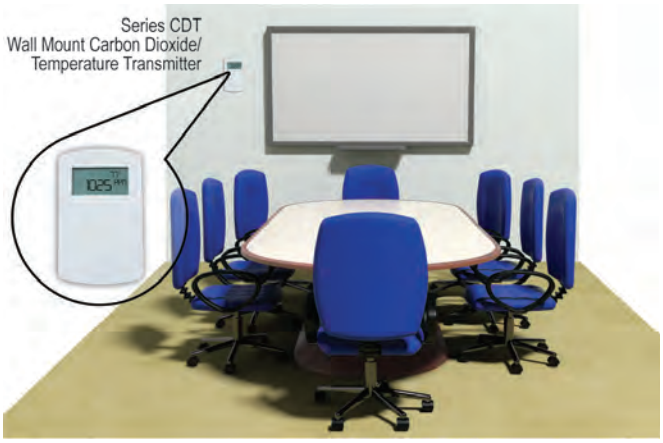

Demand control ventilation

Since the number of people in a conference room or classroom varies throughout the day, the amount of conditioned air needed to properly ventilate the room varies as well. As the number of people in a room increase, the concentration of carbon dioxide in the room will also increase. The Dwyer® Series CDT, CDTR, CDTV, and CDTA carbon dioxide transmitters measures the amount of carbon dioxide that is emitted so that the VAV control system can supply enough fresh air into the space to return the concentration of carbon dioxide in the room to normal levels.

Dwyer

SERIES FLST

DUCT MOUNTED AIRFLOW MEASUREMENT STATIONS

Rectangular, Oval or Circular Configurations

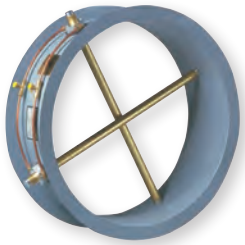

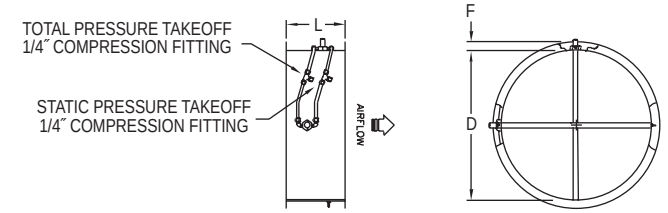

DIMENSIONS - CIRCULAR FLANGE			
Station Size "D"	Flange Thickness	Flange Size "F"	Casing Length "L"
8″ - 15″	.064″	1″	6″
16″ - 44″	.064″	1-1/2″	6″
45″ - 72″	.188″	1-1/2″	10″
73″ & over	.188″	2″	12″

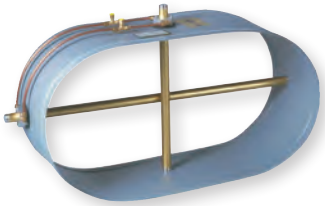

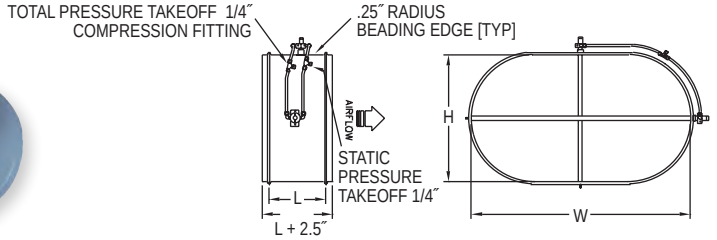

DIMENSIONS - OVAL FLANGE			
Station Width "W"	Flange Thickness	Flange Size "F"	Casing Length "L"
Up to 48″	.064″	1-1/2″	6″
Over 48″	.188″	1-1/2″	8″

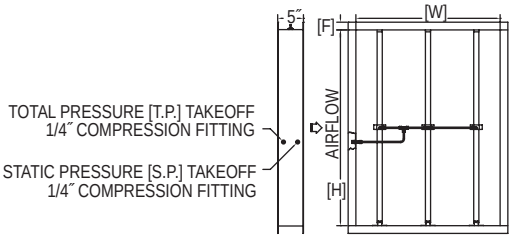

DIMENSIONS - RECTANGULAR FLANGE	
Station Size "H" or "W"	Flange Size "F"
8″ - 72″	1-1/2″
73″ & Over	2″

The **Series FLST Duct Mounted Airflow Measurement Stations** utilize an airflow averaging element generating a velocity pressure signal similar to the orifice, venturi, and other primary elements. Single or multiple airflow elements are factory mounted and pre-piped in a casing designed for flanged connection to the ductwork.
Multiple elements are joined together for connection to a differential measurement device (gage, transmitter, etc.) for flow measurement and indication purposes.

FEATURES/BENEFITS

- Low signal-to-noise ratio
- Factory mounted and pre-piped in a flanged duct section (casing)
- Standard construction includes galvanized casing and 6063-T5 anodized aluminum flow sensors
- Standard airflow stations can be operated (in air) continuously in temperatures up to 350°F or intermittently in temperatures up to 400°F

APPLICATIONS

- Building air intake and exhaust flow rate measurement
- HVAC air flow measurement

SPECIFICATIONS

Accuracy: Within 2% of actual flow when installed in accordance with published recommendations.
K-Factor: 0.97.
Velocity Range: 100 to 10,000 FPM (0.51-51 m/s).
Wetted Material: Elements: 6063-T5 anodized aluminum; Casings: 16 ga G90 galvanized steel.
Temperature Limits: Galvanized casings and aluminum elements 350°F (177°C) continuous operation (in air) 400°F (204°C) intermittent operation (in air).
Humidity: All airflow stations 0 to 100% non condensing.
Process Connections: 1/4″ compression fittings.

Circular Models

FLST–C ☐

DIAMETER (IN)*

Rectangular or Oval Models

FLST – ☐ ☐ x ☐ – ☐

CONFIGURATION
R – Rectangular
O – Oval

HEIGHT (IN) x WIDTH (IN)*

OPTION
IM – Internal pressure connections
F – Flange for oval mount station

Note: When ordering rectangular or oval flow stations, pressure taps will always be located on the longer of the two dimensions.

*Metric dimensions available upon request.

DUCT MOUNTED AIRFLOW MEASUREMENT STATIONS

Rectangular, Oval or Circular Configurations

MODEL CHART - SERIES FLST RECTANGULAR OR OVAL															
Size	8″	10″	12″	14″	16″	18″	20″	22″	24″	26″	28″	30″	32″	34″	36″
8″	X	X	X	X	X	X	X	X	X	X	X	X	X	X	X
10″		X	X	X	X	X	X	X	X	X	X	X	X	X	X
12″			X	X	X	X	X	X	X	X	X	X	X	X	X
14″				X	X	X	X	X	X	X	X	X	X	X	X
16″					X	X	X	X	X	X	X	X	X	X	X
18″						X	X	X	X	X	X	X	X	X	X
20″							X	X	X	X	X	X	X	X	X
22″								X	X	X	X	X	X	X	X
24″									X	X	X	X	X	X	X
26″										X	X	X	X	X	X
28″											X	X	X	X	X
30″												X	X	X	X
32″													X	X	X
34″														X	X
36″															X

Note: When ordering rectangular or oval flow stations, pressure taps will always be located on the longer of the two dimensions.

MODEL CHART - SERIES FLST RECTANGULAR OR OVAL																
Size	40″	44″	48″	52″	56″	60″	66″	72″	78″	84″	90″	96″	102″	108″	114″	120″
8″	X	X	X	X	X	X	X	X	X	X	X	X				
10″	X	X	X	X	X	X	X	X	X	X	X	X	X			
12″	X	X	X	X	X	X	X	X	X	X	X	X	X	X		
14″	X	X	X	X	X	X	X	X	X	X	X	X	X	X	X	
16″	X	X	X	X	X	X	X	X	X	X	X	X	X	X	X	X
18″	X	X	X	X	X	X	X	X	X	X	X	X	X	X	X	X
20″	X	X	X	X	X	X	X	X	X	X	X	X	X	X	X	X
22″	X	X	X	X	X	X	X	X	X	X	X	X	X	X	X	X
24″	X	X	X	X	X	X	X	X	X	X	X	X	X	X	X	X
26″	X	X	X	X	X	X	X	X	X	X	X	X	X	X	X	X
28″	X	X	X	X	X	X	X	X	X	X	X	X	X	X	X	X
30″	X	X	X	X	X	X	X	X	X	X	X	X	X	X	X	X
32″	X	X	X	X	X	X	X	X	X	X	X	X	X	X	X	X
34″	X	X	X	X	X	X	X	X	X	X	X	X	X	X	X	X
36″	X	X	X	X	X	X	X	X	X	X	X	X	X	X	X	X
40″	X	X	X	X	X	X	X	X	X	X	X	X	X	X	X	X
44″		X	X	X	X	X	X	X	X	X	X	X	X	X	X	X
48″			X	X	X	X	X	X	X	X	X	X	X	X	X	X
52″				X	X	X	X	X	X	X	X	X	X	X	X	X
56″					X	X	X	X	X	X	X	X	X	X	X	X
60″						X	X	X	X	X	X	X	X	X	X	X
66″							X	X	X	X	X	X	X	X	X	X
72″								X	X	X	X	X	X	X	X	X
78″									X	X	X	X	X	X	X	X
84″										X	X	X	X	X	X	X
90″											X	X	X	X	X	X
96″												X	X	X	X	X
102″													X	X	X	X
108″														X	X	X
114″															X	X
120″																X

Note: When ordering rectangular or oval flow stations, pressure taps will always be located on the longer of the two dimensions.

MODEL CHART - SERIES FLST CIRCULAR														
Size	8″	10″	12″	14″	16″	18″	20″	22″	24″	26″	28″	32″	36″	40″
	X	X	X	X	X	X	X	X	X	X	X	X	X	X
Size	44″	48″	54″	60″	66″	72″	78″	84″	90″	96″	102″	108″	114″	120″
	X	X	X	X	X	X	X	X	X	X	X	X	X	X

OPTIONS	
To order add suffix:	Description
-F	Flange (oval stations only)
-IM	Internal pressure connections (rectangular stations only)
-SS1	316 SS elements with 16 GA galvanized casing
-SS2	316 SS elements with 16 GA 304 SS casing
-SS3	316 SS elements with 16 GA 316 SS casing

Dwyer

SERIES STRA

DUCT MOUNTED AIRFLOW MEASUREMENT STATIONS

Integral Flow Straightener, Ideal for Turbulent Measuring Conditions

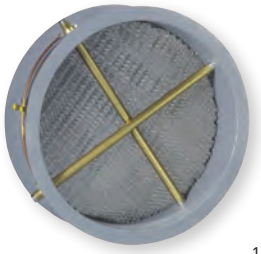

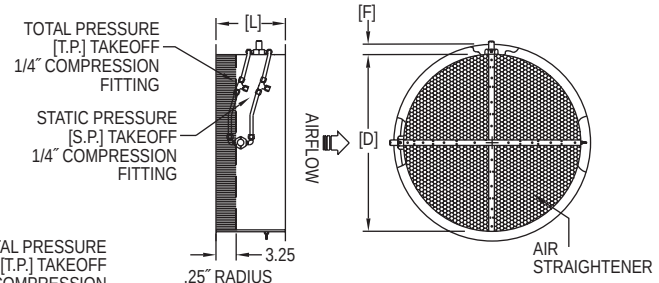

DIMENSIONS - CIRCULAR FLANGE			
Station Size "D"	Flange Thickness	Flange Size "F"	Casing Length "L"
8″ - 15″	.064″	1″	8″
16″ - 44″	.064″	1-1/2″	8″
45″ - 72″	.188″	1-1/2″	10″
73″ and over	.188″	2″	12″

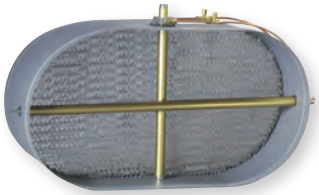

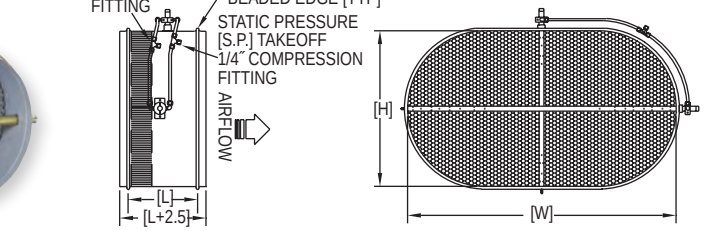

DIMENSIONS - OVAL FLANGE (OPTIONAL)			
Station Width "W"	Flange Thickness	Flange Size	*Casing Length "L"
Up to 44″	.064″	1-1/2″	8″
Over 44″	.188″	1-1/2″	10″
*All oval flow stations without flange have a casing length of 8″.			

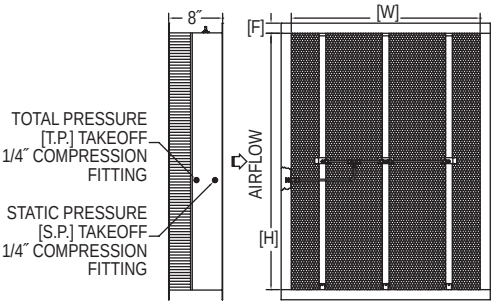

DIMENSIONS - RECTANGULAR FLANGE	
Station Size "H" or "W"	Flange Size "F"
8″ - 72″	1-1/2″
73″ and over	2″

The **Series STRA Duct Mounted Airflow Measurement Stations** utilize an airflow averaging element generating a velocity pressure signal similar to the orifice, venturi, and other primary elements. Single or multiple airflow elements are factory mounted and pre-piped in a casing designed for flanged connection to the ductwork.
Multiple elements are joined together for connection to a differential measurement device (gage, transmitter, etc.) for flow measurement and indication purposes. It has been developed with a honeycomb airflow straightening section for use in duct systems having highly turbulent conditions at the point of measurement.

BENEFITS/FEATURES

- Honeycomb airflow straightening section with 1/2 opening by 3″depth
- Low signal-to-noise ratio
- Factory mounted and pre-piped in a flanged duct section (casing)
- Standard construction includes galvanized casing and 6063-T5 anodized aluminum flow sensors
- Standard airflow stations can be operated (in air) continuously in temperatures up to 350°F or intermittently in temperatures up to 400°F

APPLICATIONS

- Building air intake and exhaust flow rate measurement
- HVAC air flow measurement

SPECIFICATIONS

Accuracy: Within 2% of actual flow when installed in accordance with published recommendations.
K Factor: 0.97.
Velocity Range: 100 to 10,000 FPM (0.51 to 51 m/s).
Wetted Materials: Elements: 6063-T5 anodized aluminum; Casings: 16 ga G90 galvanized steel, 3003 aluminum air flow straightener.
Temperature Limits: Galvanized casings and aluminum elements 350°F (177°C) continuous operation (in air), 400°F (204°C) intermittent operation (in air).
Humidity Limits: All airflow stations 0 to 100% non condensing.
Process Connections: 1/4″ compression fittings.

Circular Models

STRA–C ☐

DIAMETER (IN)*

Rectangular or Oval Models

STRA – ☐ ☐ **x** ☐ **–** ☐

CONFIGURATION
R – Rectangular
O – Oval

HEIGHT (IN) x WIDTH (IN)*

OPTION
IM – Internal pressure connections
F – Flange for oval mount station

Note: When ordering rectangular or oval flow stations, pressure taps will always be located on the longer of the two dimensions.

*Metric dimensions available upon request.

DUCT MOUNTED AIRFLOW MEASUREMENT STATIONS

Integral Flow Straightener, Ideal for Turbulent Measuring Conditions

MODEL CHART - SERIES STRA RECTANGULAR OR OVAL															
Size	8″	10″	12″	14″	16″	18″	20″	22″	24″	26″	28″	30″	32″	34″	36″
8″	X	X	X	X	X	X	X	X	X	X	X	X	X	X	X
10″		X	X	X	X	X	X	X	X	X	X	X	X	X	X
12″			X	X	X	X	X	X	X	X	X	X	X	X	X
14″				X	X	X	X	X	X	X	X	X	X	X	X
16″					X	X	X	X	X	X	X	X	X	X	X
18″						X	X	X	X	X	X	X	X	X	X
20″							X	X	X	X	X	X	X	X	X
22″								X	X	X	X	X	X	X	X
24″									X	X	X	X	X	X	X
26″										X	X	X	X	X	X
28″											X	X	X	X	X
30″												X	X	X	X
32″													X	X	X
34″														X	X
36″															X

Note: When ordering rectangular or oval flow stations, pressure taps will always be located on the longer of the two dimensions.

MODEL CHART - SERIES STRA RECTANGULAR OR OVAL																
Size	40″	44″	48″	52″	56″	60″	66″	72″	78″	84″	90″	96″	102″	108″	114″	120″
8″	X	X	X	X	X	X	X	X	X	X	X	X	X	X	X	X
10″	X	X	X	X	X	X	X	X	X	X	X	X	X	X	X	X
12″	X	X	X	X	X	X	X	X	X	X	X	X	X	X	X	X
14″	X	X	X	X	X	X	X	X	X	X	X	X	X	X	X	X
16″	X	X	X	X	X	X	X	X	X	X	X	X	X	X	X	X
18″	X	X	X	X	X	X	X	X	X	X	X	X	X	X	X	X
20″	X	X	X	X	X	X	X	X	X	X	X	X	X	X	X	X
22″	X	X	X	X	X	X	X	X	X	X	X	X	X	X	X	X
24″	X	X	X	X	X	X	X	X	X	X	X	X	X	X	X	X
26″	X	X	X	X	X	X	X	X	X	X	X	X	X	X	X	X
28″	X	X	X	X	X	X	X	X	X	X	X	X	X	X	X	X
30″	X	X	X	X	X	X	X	X	X	X	X	X	X	X	X	X
32″	X	X	X	X	X	X	X	X	X	X	X	X	X	X	X	X
34″	X	X	X	X	X	X	X	X	X	X	X	X	X	X	X	X
36″	X	X	X	X	X	X	X	X	X	X	X	X	X	X	X	X
40″	X	X	X	X	X	X	X	X	X	X	X	X	X	X	X	X
44″		X	X	X	X	X	X	X	X	X	X	X	X	X	X	X
48″			X	X	X	X	X	X	X	X	X	X	X	X	X	X
52″				X	X	X	X	X	X	X	X	X	X	X	X	X
56″					X	X	X	X	X	X	X	X	X	X	X	X
60″						X	X	X	X	X	X	X	X	X	X	X
66″							X	X	X	X	X	X	X	X	X	X
72″								X	X	X	X	X	X	X	X	X
78″									X	X	X	X	X	X	X	X
84″										X	X	X	X	X	X	X
90″											X	X	X	X	X	X
96″												X	X	X	X	X
102″													X	X	X	X
108″														X	X	X
114″															X	X
120″																X

Note: When ordering rectangular or oval flow stations, pressure taps will always be located on the longer of the two dimensions.

MODEL CHART - SERIES STRA CIRCULAR														
Size	8″	10″	12″	14″	16″	18″	20″	22″	24″	26″	28″	32″	36″	40″
	X	X	X	X	X	X	X	X	X	X	X	X	X	X
Size	44″	48″	54″	60″	66″	72″	78″	84″	90″	96″	102″	108″	114″	120″
	X	X	X	X	X	X	X	X	X	X	X	X	X	X

OPTIONS	
To order add suffix:	Description
-F	Flange (oval stations only)
-IM	Internal pressure connections (rectangular stations only)

Dwyer

SERIES PAFS-1000

AVERAGING FLOW SENSORS

Ideal for Sensing Fan Flow Rates

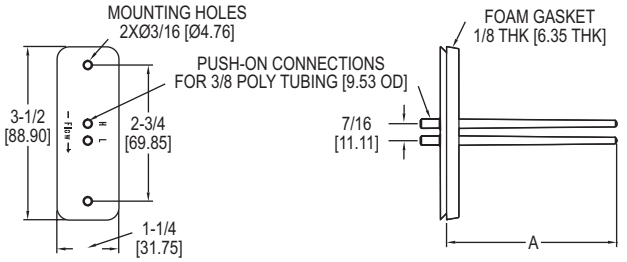

The **Series PAFS-1000 Averaging Flow Sensors** are ideal for sensing velocity pressure in the inlet section of variable air volume terminal units and fan terminal units.

BENEFITS/FEATURES
- Simple mounting flange works with both round or rectangular ducts

APPLICATIONS
- Zone control in HVAC systems
- Retrofit HVAC air flow measurement

MODEL CHART

Model	Length (Dim. A) in (cm)	Model	Length (Dim. A) in (cm)
PAFS-1002	3-5/32 (8.02)	**PAFS-1007**	14-3/4 (37.47)
PAFS-1003	5-13/32 (13.73)	**PAFS-1008**	17-1/8 (43.50)
PAFS-1004	7-21/32 (19.55)	**PAFS-1009**	19-13/32 (49.29)
PAFS-1005	9-29/32 (25.26)	**PAFS-1010**	21-21/32 (55.01)
PAFS-1006	12-1/2 (31.75)	**PAFS-1011**	23-29/32 (60.72)

SPECIFICATIONS

Service: Air and compatible gases.
Wetted Materials: ABS/polycarbonate (UL94-5V).
Temperature Limits: Operating: 40 to 120°F (4 to 49°C); Storage: -40 to 140°F (-40 to 60°C).
Process Connection: 1/4″ (6 mm) ID, 3/8″ (10 mm) OD tubing.
Mounting Orientation: Integral flange with gasket.
Weight: 1 oz (28 g).
Agency Approvals: Meets the technical requirements of EU Directive 2011/65/EU (RoHS II).

SERIES AFG

AVERAGING FLOW GRID

Cost Effective Air Flow Station for Ducts up to 60″

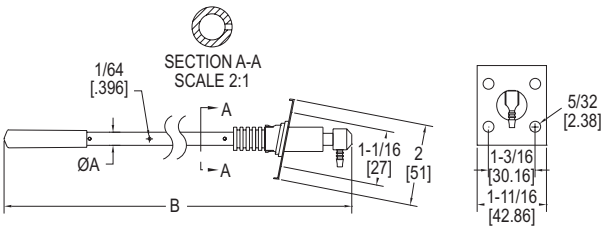

The **Series AFG Averaging Flow Grid** is a fundamental pressure-sensing device designed to sense velocity pressure in an air duct. When this output is connected to a suitable measuring instrument (i.e. manometer, pressure transducer, etc.) it may be used to determine air velocity or air flow rate.

BENEFITS/FEATURES
- Kit complete with 2 probes and installation hardware
- Trimmable length for any duct size up to 60″
- Alternative to costly air flow stations

APPLICATIONS
- To display differential pressure, velocity or volume flow using a micro manometer, gage or transmitter
- To give a warning of over or under flow rate using a pressure switch
- To control air supply in a system by connecting the grid to a pressure transmitter with an electrical output which can be used to feed into a control system
- To display differential pressure on a simple fluid manometer to give visual indication of changes in volume flow rate in the duct

SPECIFICATIONS

Service: Monitor air or compatible gas flow.
Wetted Materials: 304 SS, PVC, polyurethane, acetyl plastics, and neoprene rubber.
Accuracy: ±5%.
Maximum Temperature: 176°F (80°C).
Velocity Range: 295.2 ft/min to 5904 ft/min (1.5 to 30 m/s).
Diameter of Tubes: 5/16″ (8 mm) or 5/8″ (16 mm).
Maximum Duct Diagonal: 60.4″ (153.4 cm).
Maximum Duct Diameter: 59.4″ (150.9 cm).
Process Connections: 5/16″ barbed.
Weight: AFG-1: 1 lb (454 g); AFG-2: 3 lb (1361 g).

MODEL CHART

Model	Diameter Tube (Dim. A) in (mm)	Length (Dim. B) in (mm)
AFG-1	5/16 (8)	27 (688)
AFG-2	5/8 (16)	59-4/5 (1518)

Dwyer

SERIES MAFS

METAL AVERAGING FLOW SENSOR

Blade Profile Provides Enhanced Performance and Minimal Flow Disruption

5 YEAR LIMITED WARRANTY

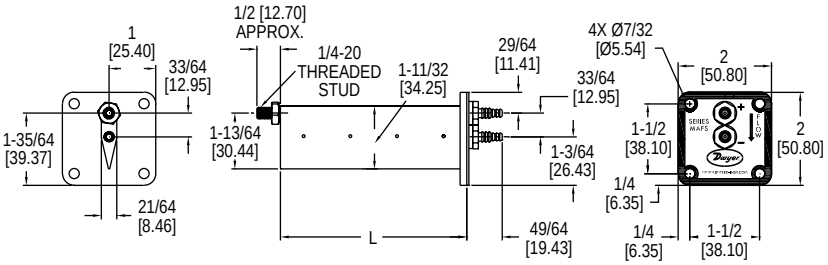

The **Series MAFS Metal Averaging Flow Sensor** is ideal for use with Dwyer® precision air velocity gages, transmitters and switches. The Series MAFS uses evenly distributed total and static pressure measuring points to deliver an accurate measurement of velocity pressure in a duct.

BENEFITS/FEATURES

- Blade design limits disruption of air stream
- Lightweight aluminum construction
- Flange mount for rectangular or square ducts

APPLICATIONS

- VAV air flow measurement
- Fume hood exhaust flow verification
- HVAC retrofit air flow measurement

SPECIFICATIONS

Service: Clean air.
Wetted Materials: Aluminum AA6063.
Accuracy: 400 to 9000 FPM (45.7 m/s); ±2% FS, ±3% FS for 6″ (160 mm) and 48″ (1200 mm) length models.
K-Factor: 0.81, 0.80 for 6″ (160 mm) and 48″ (1200 mm) lengths, 4″ (100 mm) length=0.82.
Maximum Temperature: 400°F (204°C); Gasket: -31 to 230°F (-35 to 110°C).
Minimum Design Flow: 400 FPM (2 m/s).
Maximum Design Flow: 12,000 FPM (60.91 m/s).
Process Connections: Dual barb for 3/16″ or 1/4″ ID tubing.
Straight Run Requirements: 5 diameters or longest side dimensions.
Compliance: Meets the technical requirements of EU Directive 2011/65/EU (RoHS II).

MODEL CHART

Model	Probe Length (in)	Model	Probe Length (in)	Model	Probe Length (mm)	Model	Probe Length (mm)
MAFS-04	4	**MAFS-24**	24	**MAFS-100MM**	100	**MAFS-550MM**	550
MAFS-06	6	**MAFS-26**	26	**MAFS-125MM**	125	**MAFS-600MM**	600
MAFS-08	8	**MAFS-28**	28	**MAFS-160MM**	160	**MAFS-630MM**	630
MAFS-10	10	**MAFS-30**	30	**MAFS-200MM**	200	**MAFS-650MM**	650
MAFS-12	12	**MAFS-32**	32	**MAFS-250MM**	250	**MAFS-750MM**	750
MAFS-14	14	**MAFS-34**	34	**MAFS-300MM**	300	**MAFS-800MM**	800
MAFS-16	16	**MAFS-36**	36	**MAFS-315MM**	315	**MAFS-1000MM**	1000
MAFS-18	18	**MAFS-40**	40	**MAFS-400MM**	400	**MAFS-1500MM**	1500
MAFS-20	20	**MAFS-48**	48	**MAFS-450MM**	450	**MAFS-2000MM**	2000
MAFS-22	22			**MAFS-500MM**	500		

Dwyer

MODEL DAFA

AIR FLOW INDICATOR AND ALARM

For Air Flow Monitoring in 3″ and 4″ pipes

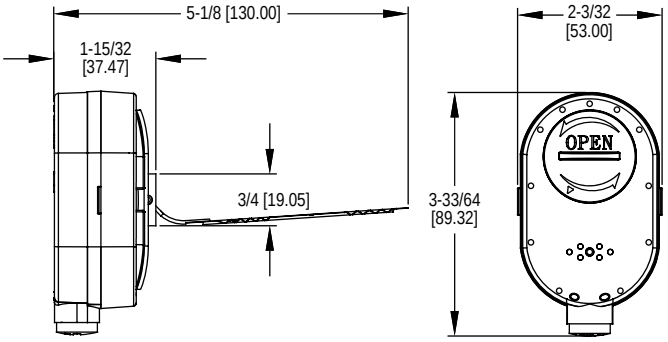

The **Model DAFA Air Flow Indicator and Alarm** alerts users of low or no air flow conditions in pipes utilizing a thin, field trimmable vane to sense the air flow rate. An 85 dB audible buzzer alternates with a bright red LED to alert users when the air flow rate drops, indicating low or no flow in the pipe. The DAFA is battery powered to provide versatility for where it can be installed, and offers a yellow LED to indicate a low battery. This device is ideal for monitoring radon mitigation systems by detecting a loss of air flow in the pipe and providing a signal to homeowners if the fan has stopped operating.

BENEFITS/FEATURES

- Simple and quick installation
- Field trimmable vane included to allow unit to be used in 3″ and 4″ pipes
- Audible and visual alarms
- Battery-operated with up to 5 year battery life and low battery warning

APPLICATIONS

- Radon mitigation systems
- Air flow monitoring in 3″ and 4″ pipes

MODEL CHART	
Model	**Description**
DAFA-1	Air flow indicator and alarm

ACCESSORIES	
Model	**Description**
A-DAFA-VANE	Replacement trimmable vane

SPECIFICATIONS

Service: Clean air.
Actuation Point: 15 CFM (4″ pipe); 10 CFM (3″ pipe) on decrease in flow.
Audible Alarm: At least 85 dB @ 1 foot distance.
Visual Alarm: Red LED for no flow alarm; Yellow LED for low battery.
Wetted Materials: ABS, polycarbonate, rare earth magnet.
Power Requirements: 3 V CR2450 lithium battery, included, user replaceable.
Battery Life: 5 years steady state; 48 hours during alarm state.
Temperature Limits: 32 to 122°F (0 to 50°C).
Mounting Orientation: Vertical.
Weight: 4 oz (113.4 g).
Compliance: CE.

Dwyer

MODEL 670

FUME HOOD MONITOR

Ensures Proper Fume Hood Performance

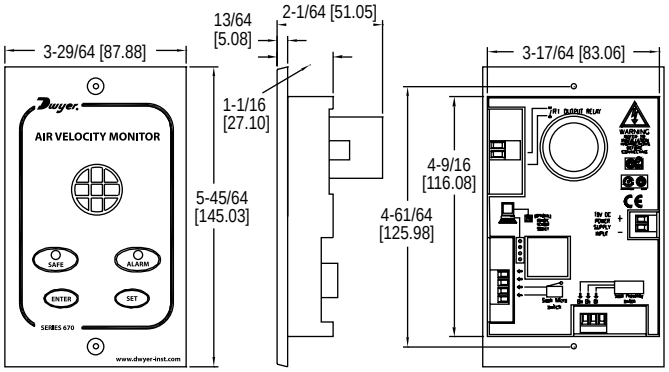

The **Model 670 Fume Hood Monitor** continuously senses air flow through the face of the fume hood, ensuring safe levels of fresh air are exhausting. The 670 provides a highly accurate hot wire sensor to detect very low flows common on fume hoods. The Model 670 comes with everything required to quickly install the unit including a mounting bracket, 24″ of tubing for connecting to the inside of the hood wall and a 120 Volt AC power adaptor.

BENEFITS/FEATURES
- Flexible surface or flush mounting
- LED safe and alarm status indicators
- Audible alarm
- Sash alarm input
- Night time set-back

APPLICATIONS
- Fume hood ventilation monitoring

MODEL CHART	
Model	**Description**
670	Fume hood monitor

SPECIFICATIONS

Service: Fume hood face velocity air flow.
Alarm Range: 30-400 FPM (0.15-2.0 m/s).
Alarm Indication: Red LED and audible alarm.
Low Air Velocity Alarm Delay: Fixed 5 s.
Visual LED Display: Red: Alarm; Green: Normal.
Horn Silence: Yes-temporary and permanent.
Accuracy: Face velocity ±10%.
Temperature Limits: Operating temperature: 55 to 86°F (13 to 30°C); Storage temperature: -40 to 150°F (-40 to 65°C).
Power Requirement: 15 VDC 500 mA; 120 VAC, 60 Hz power transformer included.
Relay Output Low Air Flow Alarm: 5 A @ 250 VAC.
Relay Input For Night Setback: 2-wire rated for 24 VDC usage.
Sash High Indication: Using a 2-wire micro switch or 3-wire proximity switch input, rated for 24 VDC usage.
Mounting: Semi flush, flush or surface mounted when using included bracket.
Weight: 5.0 oz (141 g).

MODEL AAFS

ADJUSTABLE AIR FLOW PADDLE SWITCH

Ranges from 200 to 1800 FPM, Stainless Steel Vane, ABS Housing

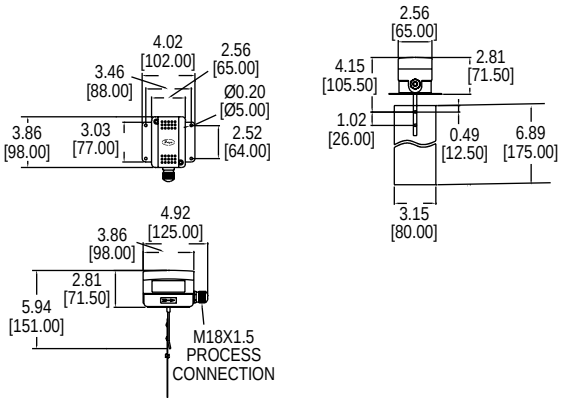

The **Model AAFS Adjustable Air Flow Paddle Switch** is capable of detecting a wide range of air velocities with minimal user calibration. Quality features include a stainless steel vane, galvanized steel base, and ABS enclosure.

BENEFITS/FEATURES
- Adjustable air flow sensitivity from 200 to 1800 FPM
- High current (15 A) rated SPDT contact
- IP65 enclosure rating

APPLICATIONS
- Air flow proving in HVAC systems

MODEL CHART	
Model	**Description**
AAFS	Adjustable air flow paddle switch

SPECIFICATIONS

Service: Air and compatible gas.
Wetted Materials: Vane: SS; Lever: Brass; Base: Galvanized steel.
Housing: ABS.
Temperature Limits: Ambient: -40 to 180°F (-40 to 85°C); Process: -14 to 185°F (-10 to 85°C).
Humidity Limits: 10 to 90%, non-condensing.
Switch Type: SPDT.
Electrical Rating: 15 (8) A @ 250 VAC.
Electrical Connection: Screw terminal with M18 x 1.5 cable gland.
Process Connection: Flange.
Mounting Orientation: Horizontal duct flow.
Set Point: Internal screw.
Enclosure Rating: IP65.
Weight: 13.6 oz (380 g).
Compliance: CE.

USA: California Proposition 65
⚠**WARNING:** This product can expose you to chemicals including Lead, which is known to the State of California to cause cancer and birth defects or other reproductive harm. For more information go to www.P65Warnings.ca.gov.

Dwyer

SERIES AVFS

AIR FLOW SWITCH

Monitors Flow in Ducts with Contact Output and Local LED Indication

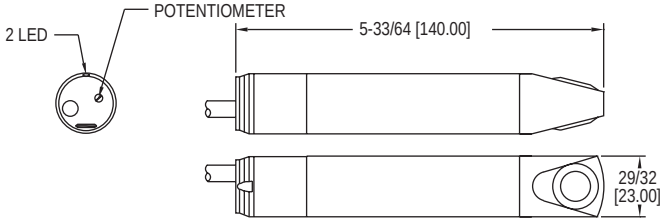

The **Series AVFS Air Flow Switch** is specifically designed to monitor air flow in ducts and provides a 3 A contact output to indicate a change or loss of flow. The AVFS provides a ±5% set point repeatability across a full-scale range of 1-10 m/s (197-1969 fpm) and includes a mounting bracket for quick duct mounting.

BENEFITS/FEATURES

- Integral red/green air flow status LED's
- Flush sensor design limits issues due to dust or particulate in the air flow
- IP65 construction

APPLICATIONS

- Fan monitoring
- Filter monitoring
- Damper feedback
- Air handlers

MODEL CHART

Model	Description
AVFS-1	80-250 AC/DC power thermo air flow switch
AVFS-2	24 VDC power thermo air flow switch

SPECIFICATIONS

Air Velocity Range: 197-1969 FPM (1-10 m/s).
Temperature Limits: 5 to 122°F (-10 to 50°C).
Humidity Limits: 0-90% RH.
Wetted Materials: PBT body, titanium sensor.
Pressure Limit: 14.7 psig (1 bar).
Housing: PBT.
Repeatability: ±5% FS.
Switch Type: N.O. SPST.
Electrical Rating: 3 A @ 30 VDC/250 VAC.
Response Time: 3-60 s. Varies with flow and set point.
Power Requirement: AVFS-1: 80 to 250 AC/DC (47 to 63 Hz AC); AVFS-2: 24 VDC ±25%.
Power Consumption: 3 VA.
Electrical Connection: 6.5´ (2 m) cable.
Enclosure Rating: IP65.
Display: 1 red LED/1 green LED.
Weight: 7.2 oz (203 g).
Agency Approvals: CE.

Dwyer
SERIES AVUL

AIR VELOCITY TRANSMITTERS

3% and 5% of Reading Accuracy, Optional BACnet or Modbus® Communication Protocols

DEALER DESIGN AWARDS

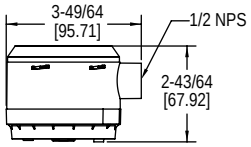

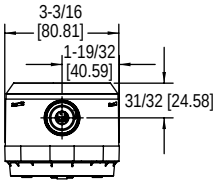

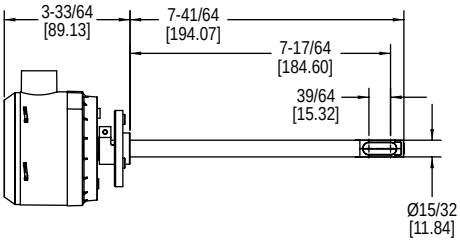

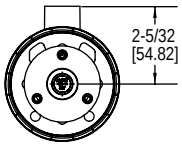

The **Series AVUL Air Velocity Transmitters** quickly and accurately measures air velocity or volumetric flow in imperial or metric units. Simultaneous current and voltage outputs on all models provide universal inputs to monitoring equipment while the output range, units, and 0 to 5/10 VDC, 4-20 mA output can be configured via local DIP switches. The optional integral display, or the portable remote display tool, provide a convenient way to locally monitor process values and configure the unit.
Models are available in 3% and 5% of reading accuracy models to suit a variety of needs, and the optional BACnet MS/TP or Modbus® RTU/ASCII communication protocol allows units to be daisy-chained while providing access to all of the velocity and flow data, as well as additional information such as air temperature.

BENEFITS/FEATURES

- Minimal preventative maintenance as sensing element is covered with an engineered protective coating
- Easy field setup via the on board dip switches for range and units

APPLICATIONS

- VAV systems
- Building ducts
- HVAC systems

MODEL CHART

Example	AVUL	-3	D	A1	-LCD	AVUL-3DA1-LCD
Model	AVUL					Air velocity transmitter
Accuracy		5				±(0.2 m/s + 5% of reading) @ standard conditions
		3				±(0.2 m/s + 3% of reading) @ standard conditions
Mounting			D			Duct mount
Output				A1		Analog universal (0-5 VDC, 0-10 VDC, 4-20 mA)
				B1		Analog + BACnet MS/TP
				M1		Analog + Modbus® RTU/ASCII
Options					FC	Factory calibration certificate
					GLD	Electrical cable gland
					LCD	LCD display
					NIST	NIST certificate
					SF	Silicone free

SPECIFICATIONS

Service: Clean air and non-combustible, compatible gases.
Wetted Materials: Consult factory.
Range: 1000, 2000, 3000, 4000 FPM (5, 10, 15, 20 m/s); Field selectable.
Accuracy: ±(5% of reading + 0.2 m/s) or ±(3% of reading + 0.2 m/s) @ standard conditions, depending on model.
Temperature Limits: 32 to 122°F (0 to 50°C).
Power Requirements: 24 VDC ±20% or 24 VAC ±20%.
Humidity Limits: 5 to 95% RH, non-condensing.
Output Signals: 4-20 mA, 0-5 VDC, 0-10 VDC.
Response Time (90%): 10 s, typical.
Zero and Span Adjustments: Digital push-buttons.
Output Load Resistance: Current output: 0 to 1100 Ω max.; Voltage output: Minimum load resistance 1 k Ω.
Current Consumption: 60 mA max.
Display (optional): 5 digit LCD.
Electrical Connections (Analog): Power and output: 4-wire removable European style terminal block for 16 to 26 AWG.
Communication (optional): Connections: BACnet MS/TP or Modbus® RTU/ASCII: 3-wire removable European style terminal block for 16 to 26 AWG; Supported baud rates: 9600, 19200, 38400, 57600, 76800, 115200.
Device Load: 1/8th unit load.
Electrical Entry: 1/2″ NPS thread. Accessory (A-151): Cable gland for 5 to 10 mm diameter cable.
Enclosure Rating: NEMA 4X (IP66).
Mounting Orientation: Flow direction must be parallel to the sensor tip.
Weight: 6.0 oz (160 g).
Compliance: BTL, CE.

ACCESSORIES

Model	Description
A-151	Cable gland for 5 to 10 mm diameter cable
A-435-A	Remote display tool
A-AVUL-LCD	Field upgradeable display
A-AVUL-MTG	Replacement mounting flange
SCD-PS	100-240 VAC/VDC to 24 VDC power supply

Modbus® is a registered trademark of Schneider Electric USA, Inc.

Dwyer

SERIES AVPT

PENCIL STYLE AIR VELOCITY TRANSMITTER

3% and 5% Models, Optional BACnet Communication Protocols

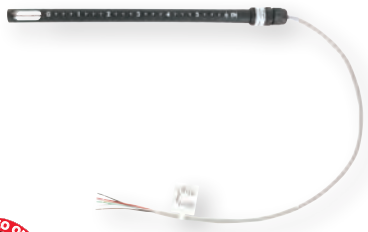

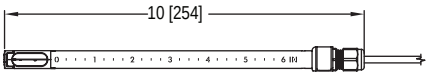

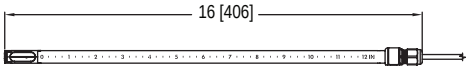

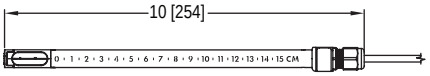

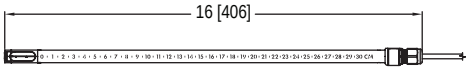

6˝ probe length **12˝ probe length**

The **Series AVPT Pencil Style Air Velocity Transmitter** uses thermal anemometer technology to provide high accuracy and stable air velocity measurements in imperial and metric units. The Series AVPT can be configured with either a voltage output or BACnet MS/TP communication to provide universal inputs to a variety of monitoring equipment. Models are available with fixed cable lengths of 20 or 78 inches with flying leads or a 5-pin M12 connector on a 24 inch cable. Probes are available in lengths of 6 or 12 inches. A mounting flange included with the product provides the ability to vary insertion depth.

Models are available in 3% or 5% accuracy to suit a variety of applications, while the optional BACnet MS/TP communication protocol allows units to be daisy-chained to provide access to all of the velocity and temperature measurements.

BENEFITS/FEATURES

- Sensing elements have been coated with an engineered conformal coating to ensure durability and longevity
- Varying lengths for easy installation
- Functionality at temperatures below freezing

APPLICATIONS

- VAV systems
- Building ducts

SPECIFICATIONS

Service: Clean air.
Ranges: 1000, 2000, 3000, or 4000 FPM (5, 10, 15, or 20 m/s); Model specific.
Accuracy: Standard: ±(5% reading +40 FPM); High accuracy: ±(3% reading +40 FPM); Model specific.
Power Requirements: 24 VAC/VDC ±20%.
Current Consumption: < 50 mA.
Outputs: Analog: 0-10 V (0-5 V configurable).
BACnet MS/TP: Selectable at time of order.
Supported Baud Rate: 9600, 19200, 38400, 57600, 76800, and 115200.
Voltage Output Load Resistance: 10 kΩ minimum (10 V output with AC supply); 1 kΩ minimum all other conditions.
Electrical Connection: Cable: Plenum rated cable with 22 AWG conductors.
5-Conductor Cable whip: 20˝ (0.5 m) or 78˝ (2 m).
5-pin M-12: 24˝ (0.6 m); model specific.
Response Time (90%): 4 s, typical.
Operational Temperature Limits: -4 to 140 °F (-20 to 60 °C).
Storage Temperature Limits: -40 to 140°F (-40 to 60°C).
Probe Length: 6˝ or 12˝; model specific.
Enclosure Rating: NEMA 3.
Mounting Orientation: Flow direction must be parallel to the sensor tip; See Installation section for details.
Weight: 1.4 oz (40 g); based on M12 connection with 12˝ probe length.
Agency Approvals: CE, RCM, BTL, UL plenum rated (UL tested).

MODEL CHART

Example	AVPT	-S	03	C1	A	06	-127	-FC	AVPT-S03C1A06-127-FC
Series	AVPT								Pencil style air velocity transmitter
Accuracy		S H							Standard ±5% of reading +40 FPM High accuracy ±3% of reading +40 FPM
Velocity Range			01 02 03 04 05 10 15 20						1000 FPM 2000 FPM 3000 FPM 4000 FPM 5 m/s 10 m/s 15 m/s 20 m/s
Electrical Connection				C1 C2 M1					Cable whip 20˝ (0.5 m) Cable whip 78˝ (2 m) M12 24˝ (0.6 m)
Output Type					A B				Analog 0-5 V and 0-10 V BACnet MS/TP
Probe Length						06 12			6˝ 12˝
BACnet Address							127		000-127 whole integer with BACnet output
Options								FC NIST	Factory calibration certificate NIST traceable certificate

MODEL CHART

Example	Description
A-AVUL-MTG	Replacement mounting flange
A-AVUL-QFG	Quick fix cable gland for outside the duct installation
SCD-PS	100-240 VAC/VDC to 24 VDC power supply

Dwyer
SERIES AVLV

AIR VELOCITY TRANSMITTER

1% and 2% Models, Optional BACnet MS/TP or Modbus®

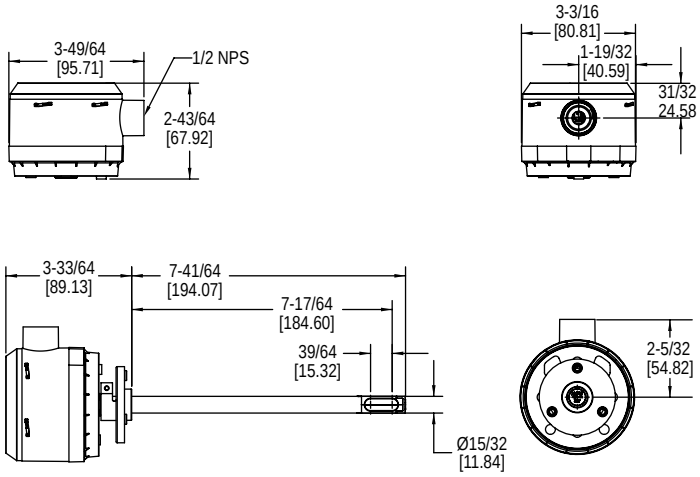

The **Series AVLV Air Velocity Transmitter** quickly and accurately measures air velocity or volumetric flow in imperial or metric units. Simultaneous current and voltage outputs on all models provide universal inputs to monitoring equipment while the output range, units, and 0-5/10 VDC, 4-20 mA output can be configured via local DIP switches. The optional integral display, or the portable remote tool, provide a convenient way to locally monitor process values and configure the unit.

Models are available in 1% and 2% accuracy models and low velocity ranges to suit a variety of needs, and the optional BACnet MS/TP or Modbus® RTU/ASCII communication protocol allows units to be daisy-chained while providing access to all of the velocity and flow data, as well as additional information such as air temperature. The lower ranges in these high accuracy units allow for applications in quality intensive environments, such as the pharmaceutical industry.

BENEFITS/FEATURES

- Minimal preventative maintenance as sensing element is covered with an engineered protective coating
- Easy field setup via the on board dip switches for range and units

APPLICATIONS

- VAV systems
- Building ducts
- Clean room systems

MODEL CHART

Model	Accuracy	Output
AVLV-1DA1	±1%	Universal current/voltage outputs
AVLV-1DB1	±1%	BACnet communication
AVLV-1DM1	±1%	Modbus® communication
AVLV-2DA1	±2%	Universal current/voltage outputs
AVLV-2DB1	±2%	BACnet communication
AVLV-2DM1	±2%	Modbus® communication

OPTIONS

To order add suffix:	Description
-FC	Factory calibration certificate
-GLD	Electrical cable gland
-LCD	LCD display
-NIST	NIST certificate
Example: AVLV-1DA1-LCD	

SPECIFICATIONS

Service: Clean air and non-combustible, compatible gases.
Wetted Materials: Consult factory.
Range: 100, 200, 300, 400 FPM (0.5, 1, 1.5, 2 m/s); field selectable.
Accuracy: See chart.
Temperature Limits: 32 to 122°F (0 to 50°C).
Power Requirements: 24 VDC ±20% or 24 VAC ±20%.
Humidity Limits: 5 to 95% RH, non-condensing.
Output Signals: 4-20 mA, 0-5 VDC, 0-10 VDC.
Response Time (90%): 4 s, typical; 1 s at constant temperature.
Zero and Span Adjustments: Digital push buttons.
Output Load Resistance: Current output: 0 to 1100 Ω max.; Voltage output: Minimum load resistance 1 kΩ.
Current Consumption: 60 mA max.
Display: 5 digit LCD (optional).
Electrical Connections: Analog: Power and output: 4-wire removable European style terminal block for 16 to 26 AWG; Communication: Connections: BACnet MS/TP or Modbus® RTU/ASCII: 3-wire removable European style terminal block for 16 to 26 AWG.
Supported Communication Baud Rates: 9600, 19200, 38400, 57600, 76800, 115200 (optional).
Device Load: 1/8 unit load.
Electrical Entry: 1/2″ NPS thread; Accessory: Cable gland for 5 to 10 mm diameter cable, A-151.
Enclosure Rating: NEMA 4X (IP66).
Mounting Orientation: Flow direction must be parallel to the sensor tip.
Weight: 6.0 oz (160 g).
Compliance: BTL, CE.

ACCURACY CHART

Velocity Range	Accuracy Rating*
20 to 100 FPM (0.15 to 0.5 m/s)	± (2% of reading + 0.04 m/s [7.9 FPM])
	± (1% of reading + 0.04 m/s [7.9 FPM])
20 to 200 FPM (0.15 to 1.0 m/s)	± (2% of reading + 0.04 m/s [7.9 FPM])
	± (1% of reading + 0.04 m/s [7.9 FPM])
20 to 300 FPM (0.15 to 1.5 m/s)	± (2% of reading + 0.05 m/s [9.8 FPM])
	± (1% of reading + 0.05 m/s [9.8 FPM])
20 to 400 FPM (0.15 to 2.0 m/s)	± (2% of reading + 0.06 m/s [11.8 FPM])
	± (1% of reading + 0.06 m/s [11.8 FPM])
*Accuracy dependent on model selected when ordering.	

Modbus® is a registered trademark of Schneider Electric USA, Inc.

Dwyer

SERIES 641

AIR VELOCITY TRANSMITTERS

High Accuracy, Field Selectable Ranges

CALIBRATION SERVICES AVAILABLE

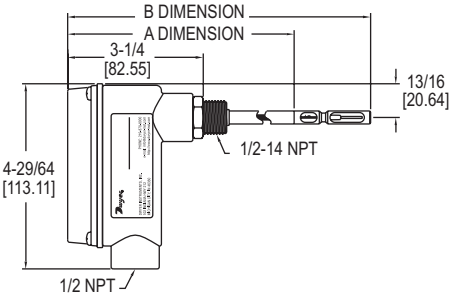

641 AVT WITH DISPLAY OPTION	
A Dimension	**B Dimension**
7-63/64 [202.80]	9-13/16 [249.24]
13-63/64 [355.20]	15-13/16 [401.64]
19-63/64 [507.60]	21-13/16 [554.04]
26-63/64 [685.40]	28-13/16 [731.84]
32-63/64 [837.80]	34-13/16 [884.24]
37-63/64 [964.80]	39-13/16 [1011.24]

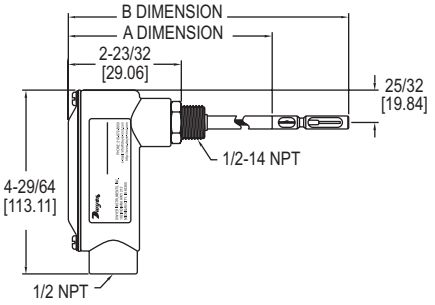

641 AVT WITHOUT DISPLAY OPTION	
A Dimension	**B Dimension**
7-7/16 [188.91]	9-9/32 [235.74]
13-7/16 [341.31]	15-9/32 [388.14]
19-7/16 [493.71]	21-9/32 [540.54]
26-7/16 [671.51]	28-9/32 [718.34]
29-7/16 [747.71]	34-9/32 [870.74]
37-7/16 [950.91]	39-9/32 [997.74]

The **Series 641 Air Velocity Transmitters** are the ideal instrument for monitoring air flow. This transmitter uses a heated mass flow sensor which allows for precise velocity measurements at various flow rates and temperatures. The 641's 16 field-selectable ranges provides it the versatility to be selected for several air flow applications. The optional LED produces a complete, low-cost solution for local indication of air flow.

BENEFITS/FEATURES

- Ranges from 250 FPM (1.25 MPS) to 15,000 FPM (75 MPS)
- Optional bright LED display
- Easy push-button set-up
- Compact housing
- 4-20 mA output
- Digital filter for signal damping

APPLICATIONS

- Exhaust stack flow monitoring
- Air control in drying processes
- HVAC air velocity measurements
- Fan supply and exhaust tracking
- Clean room ventilation monitoring

MODEL CHART	
Model	**Probe Length***
641-6	6″ (152.4 mm)
641-6-LED	6″ (152.4 mm)
641-12	12″ (304.8 mm)
641-12-LED	12″ (304.8 mm)
641-18	18″ (457.2 mm)
641-18-LED	18″ (457.2 mm)
641-24	24″ (609.6 mm)
641-24-LED	24″ (609.6 mm)
*Other probe lengths available contact factory.	

OPTIONS	
To order add suffix:	**Description**
-NIST	NIST traceable calibration certificate
Example: 641-6-NIST	

ACCESSORIES	
Model	**Description**
A-156	Universal mounting plate, 1/2″ female NPT
A-158	Split flange mounting kit
A-159	Duct mounting gland
641-LED	Field-upgradeable LED

SPECIFICATIONS

Service: Clean air and compatible, non-combustible gases.
Accuracy: 3% FS process gas: 32 to 122°F (0 to 50°C); 4% FS process gas: -40 to 32°F and 122 to 212°F (-40 to 0°C and 50 to 100°C).
Response Time: Flow: 1.5 s to 95% of final value (output filter set to minimum).
Temperature Limits: Process: -40 to 212°F (-40 to 100°C); Ambient: 32 to 140°F (0 to 60°C).
Pressure Limit: 100 psi (6.89 bar) maximum.
Humidity Limit: Non-condensing.
Power Requirements: 12-35 VDC, 10-16 VAC. 1.5 A rating required on supply due to initial power surge drawn by transmitter.
Output Signal: 4-20 mA, isolated 24 V source, 3 or 4-wire connection.
Output Filter: Selectable 0.5-15 (s).
Loop Resistance: 600 Ω max.
Current Consumption: 300 mA max.
Electrical Connections: Screw terminal.
Process Connections: 1/2″ male NPT.
Enclosure Rating: Designed to meet NEMA 4X (IP66) for non LED models only.
Mounting Orientation: Unit not position sensitive. Probe must be aligned with airflow.
Weight: 12.6 oz (357.2 g).
Agency Approval: CE.

OPTIONAL DISPLAY VERSION:
Display: 4-1/2 digit 1/2″ red LED.
Resolution: 1 FPM, 0.01 MPS (10 FPM @ 10,000 and 15,000 FPM ranges).
Weight: 13.3 oz (377 g).

Dwyer

SERIES 641RM

AIR VELOCITY TRANSMITTER WITH REMOTE PROBE

For Remotely Mounting Electronic Enclosure

CALIBRATION SERVICES AVAILABLE

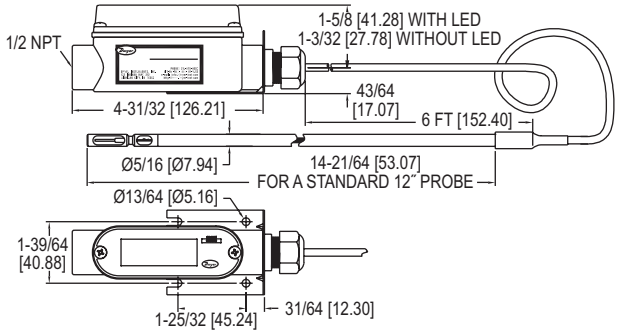

The **Series 641RM Air Velocity Transmitter with Remote Probe** features the same highly accurate heated mass flow sensor as the Series 641, with a remote probe construction. The units 6´ cable which connects the sensing probe with the electronic enclosure allows the enclosure to be mounted where it can be more easily accessed.

BENEFITS/FEATURES
- Output signal conditioning with digital filtering
- Install in tight spaces with compact design
- Easy setup with on-board buttons

APPLICATIONS
- Exhaust stack flow monitoring
- Air control in drying processes
- HVAC air velocity measurements
- Fan supply and exhaust tracking
- Clean room ventilation monitoring

SPECIFICATIONS

Service: Clean air and compatible, non-combustible gases.
Accuracy: 3% FS process gas: 32 to 122°F (0 to 50°C); 4% FS process gas: -40 to 32°F and 122 to 212°F (-40 to 0°C and 50 to 100°C).
Range: 250 FPM (1.25 MPS) to 15,000 FPM (75 MPS).
Response Time: Flow: 1.5 s to 95% of final value (output filter set to minimum).
Temperature Limits: Process: -40 to 212°F (-40 to 100°C); Ambient: 32 to 140°F (0 to 60°C).
Pressure Limit: 100 psi (6.89 bar) maximum.
Humidity Limit: Non-condensing.
Power Requirements: 12-35 VDC, 10-16 VAC. 1.5 A rating required on supply due to initial power surge drawn by transmitter.
Output Signal: 4-20 mA, isolated 24 V source, 3 or 4-wire connection.
Output Filter: Selectable 0.5–15 (seconds).
Loop Resistance: 600 Ω max.
Current Consumption: 300 mA max.
Electrical Connections: Screw terminal.
Mounting Orientation: Unit not position sensitive. Probe must be aligned with airflow.
Weight: 13.2 oz (374.26 g).
Cable Length: 6´ (1.82 m).
Probe Length: 12˝ (30.48 cm) standard.
Probe Diameter: 5/16˝ (0.79 cm).

OPTIONAL DISPLAY VERSION:
Display: 4-1/2 digit 1/2˝ red LED.
Resolution: 1 FPM, 0.01 MPS (10 FPM @ 10,000 and 15,000 FPM ranges).
Weight: 13.9 oz (394.16 g).

MODEL CHART

Model	Description
641RM-12	Air velocity transmitter with 6´ cable
641RM-12-LED	Air velocity transmitter with 6´ cable with LED display

OPTIONS

To order add suffix:	Description
-NIST	NIST traceable calibration certificate
Example: 641RM-12-NIST	

ACCESSORIES

Model	Description
641-LED	Field-upgradeable LED
A-156	Universal mounting plate, 1/2˝ female NPT
A-158	Split flange mounting kit
A-159	Duct mounting gland

SERIES 641B

AIR VELOCITY TRANSMITTER

Dirty Air Flow Applications

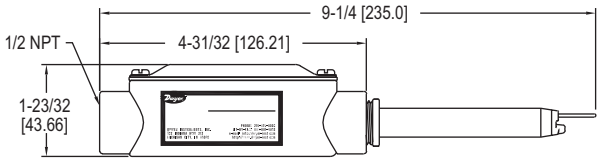

The **Series 641B Air Velocity Transmitter** uses a heated mass flow sensor suitable for dirty air flow applications. It has user-selectable ranges from 250 FPM (1.25 MPS) to 2000 FPM (10 MPS).

BENEFITS/FEATURES
- Stainless steel sensor suitable for dirty air flow measurement
- Ranges from 250 FPM (1.25 MPS) to 2000 FPM (10 MPS)
- 4-20 mA output
- Digital filter for signal damping

APPLICATIONS
- Exhaust stack flow monitoring
- Air control in drying processes
- HVAC air velocity measurements
- Fan supply and exhaust tracking
- Clean room ventilation monitoring

SPECIFICATIONS

Service: Air and compatible, non-combustible gases.
Accuracy: 5% FS process gas: 32 to 122°F (0 to 50°C); 6% FS process gas: -40 to 32°F and 122 to 176°F (-40 to 0°C and 50 to 80°C).
Response Time: Flow: 1.5 s to 95% of final value (output filter set to minimum).
Temperature Limits: Process: -40 to 176°F (-40 to 80°C); Ambient: 32 to 140°F (0 to 60°C).
Humidity Limit: Non-condensing.
Power Requirements: 12-35 VDC, 10-16 VAC. 1.5 A rating required on supply due to initial power surge drawn by transmitter.
Output Signal: 4-20 mA, isolated 24 V source, 3- or 4-wire connection.
Output Filter: Selectable 0.5 -15 s.
Loop Resistance: 600 Ω max.
Current Consumption: 300 mA max*.
Electrical Connections: Screw terminal.
Enclosure Rating: Designed to meet NEMA 4X (IP66) for non LED models only.
Mounting Orientation: Unit not position sensitive.
Weight: 12.6 oz (357.2 g).

*A brief current transient exceeding 300 mA may be seen on startup

MODEL CHART

Model	Description
641B-4	Air velocity transmitter
641B-4-LED	Air velocity transmitter with LED display

ACCESSORIES

Model	Description
A-155	Mounting gland with 1/2˝ male NPT fitting
A-156	Flange mounting plate with 1/2˝ female NPT

Dwyer

SERIES HS

HUMIDITY SWITCH

Programmable, 16 A Relay, 3-Digit Display

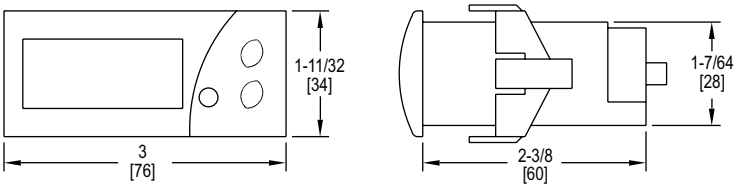

Panel cutout 2-51/64˝ x 1-9/64˝ (71 x 29 mm)

The **Series HS Humidity Switch** provides control for humidifying or dehumidifying systems. Relative humidity, output status, and error messaging can be viewed on the bright green LED. Access to programming parameters can be locked for security purposes using the password protection feature.

BENEFITS/FEATURES
- Relative humidity display and control
- Parameter protection
- 0-1 V, 4-20 mA or 3 V (THC-P) input selection

APPLICATIONS
- Environmental chambers
- Beer and wine chillers
- Greenhouses

SPECIFICATIONS

Relative Humidity Range: 10 to 100% RH.
Input: 0-1 V, 3 V or 4-20 mA.
Accuracy: THC-P: ±5% @ 20 to 90%; HS: ±1% RH.
Display: 3-digit, green, 1/2˝ (12.7 mm) digits.
Resolution: 1 digit.
Temperature Limits: 32 to 158°F (0 to 70°C).
Storage Temperature: -4 to 176°F (-20 to 80°C).
Output: 16 A SPDT relay @ 250 VAC resistive.
Horsepower Rating (HP): 1 HP.
Control Type: ON/OFF.
Power Requirements: 115 VAC or 230 VAC (depending on model).
Memory Backup: Nonvolatile memory.
Front Panel Rating: IP64.
Weight: 2.3 oz (65 g).
Compliance: CE, cURus.

MODEL CHART

Model	Supply Power
HS-311	115 VAC
HS-312	230 VAC

ACCESSORIES

Model	Description
THC-P	Humidity probe, 3 V output, 4´ (1.2 m) cable

SERIES THC

TEMPERATURE/HUMIDITY SWITCH

Independent Displays, 61 Programmable Parameters, 4 SPST Relays

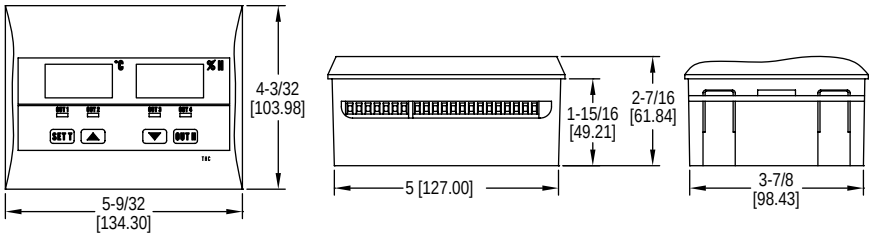

The **Series THC Temperature/Humidity Switch** simultaneously measures and controls temperature and humidity. The unit offers a 3-digit red display for temperature indication and a 3-digit green display indicating humidity. The Series THC is equipped with four independent relays, two for temperature control and two relays for humidity control.
The THC Temperature/Humidity Switch accepts up to two temperature probe inputs (sold separately) and a humidity sensor. A humidity sensor with 0-1 V, 3 V (THC-P sold separately), or 4-20 mA output can be used with the Series THC.

BENEFITS/FEATURES
- Temperature and humidity control in one device
- Password protected parameter settings
- Selectable fail safe status of relay outputs

APPLICATIONS
- Isolation chambers
- Environmental chambers
- Greenhouses
- Beer and wine chillers

SPECIFICATIONS

Measurement Range: Temperature: -58 to 302°F (-50 to 150°C); Humidity: 0 to 100% RH.
Input: Up to 2 thermistors and 1 humidity sensor.
Output: 4 SPST, 8 A relays @ 250 VAC.
Horsepower Rating (HP): 1/3 HP.
Control Type: ON/OFF direction, direct or reverse acting, neutral.
Power Requirements: 110 or 230 VAC (depending on model).
Accuracy: Temperature ±0.5% of probe range; Humidity: 20 to 90%.
Display: Two 3-digit displays. 1/2˝ digits.
Resolution: 0.1°.
Memory Backup: Nonvolatile memory.
Ambient Operating Temperature: 32 to 158°F (0 to 70°C).
Storage Temperature: -4 to 176°F (-20 to 80°C).
Panel Cutout: 5.15˝ x 3.97˝ (131 x 101 mm).
Front Panel Protection: IP64.
Weight: 1.17 lb (530 g).
Compliance: CE.

MODEL CHART

Model	Supply Power	Unit
THC-30	20-250 VAC, 24 VDC	°F
THC-31	20-250 VAC, 24 VDC	°C

ACCESSORIES

Model	Description
THC-P	Humidity probe, 3 V output, 4 ft (1.2 m) cable
TS-5	Temperature probe, PVC with 5 ft (1.5 m) cable
TS-6	Temperature probe, metal with 5 ft (1.5 m) cable
TS-51	Temperature probe, PVC with 10 ft (3 m) cable
TS-61	Temperature probe, metal with 10 ft (3 m) cable

Dwyer

SERIES RHP-E/N

WALL MOUNT HUMIDITY/TEMPERATURE/DEW POINT TRANSMITTERS

Optional LCD Display

CALIBRATION SERVICES AVAILABLE

European style

North American style

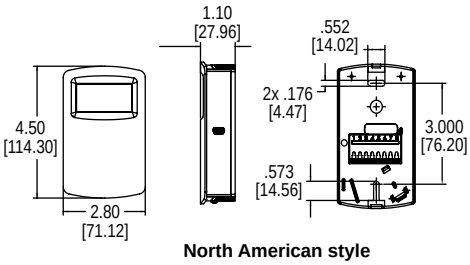

North American style

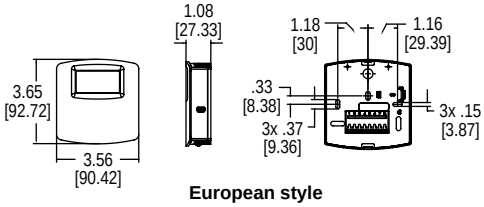

European style

The **Series RHP-E/N Wall Mount Humidity/Temperature/Dew Point Transmitters** are the most versatile room transmitter on the market. The stylish housing is well vented to provide air flow across the sensor to improve measurement accuracy. The humidity and the dew point are measured using a capacitive polymer sensor. The humidity and dew point can have either a current or voltage output, while the optional temperature output can be a current, voltage, RTD or thermistor. For models with current or voltage for the temperature output, the temperature range is field selectable.

BENEFITS/FEATURES

- Reduced installation cost with combined humidity/dew point and temperature sensing
- Wide application environments from a large selection of temperature sensors and 2% and 3% accuracies
- Reduced inventory with field selectable output

APPLICATIONS

- Air economizers
- Room comfort monitoring
- Greenhouse monitoring

SPECIFICATIONS

Relative Humidity Range: 0 to 100% RH.
Temperature Range: -40 to 140°F (-40 to 60°C) for thermistor and RTD sensors. -20 to 140°F (-28.9 to 60°C) for solid state band gap temperature sensors.
Dew Point Temperature Range: -20 to 140°F (-28.9 to 60°C); 0 to 100°F (-17.8 to 37.8°C); 40 to 90°F (4.4 to 32.3°C); -4 to 140°F (-20 to 60°C) field-selectable ranges.
Accuracy: RH: Model RHP-2XXX ±2% 10 to 90% RH @ 25°C; Model RHP-3XXX ±3% 20 to 80% RH @ 25°C; Model RHP-5XXX ±5% 20 to 80% RH @ 25°C; Thermistor temperature sensor: ±0.36°F @ 77°F (±0.2°C @ 25°C); RTD temperature sensor: DIN Class B; ±0.54°F @ 32°F (±0.3°C @ 0°C); Solid state band gap temperature sensor: ±0.9°F @ 77°F (±0.5°C @ 25°C).
Hysteresis: ±0.8%.
Repeatability: ±0.1% typical.
Temperature Limits: Operating: -40 to 140°F (-40 to 60°C); Storage: -40 to 176°F (-40 to 80°C).
Compensated Temperature Range: -4 to 140°F (-20 to 60°C).
Power Requirements: 4-20 mA loop powered outputs: 10-35 VDC; 0-5/10V outputs: 15-35 VDC or 15-29 VAC.
Output Signals: 4-20 mA loop powered outputs: 4-20 mA, 2 channels for humidity/solid state temperature sensor models (loop powered on RH). Switch selectable RH/dew point. Switch selectable normal or reverse output; 0-5/10V outputs: 5 mA max., 2 channels for humidity/solid state temperature sensor models. Switch selectable 0-10 V/2-10 V or 0-5 V/1-5 V output. Switch selectable RH/dew point. Switch selectable normal or reverse output.
Solid State Band Gap Temperature Sensor Output Ranges: Switch selectable, -20 to 140°F (-28.9 to 60°C); 0 to 100°F (-17.8 to 37.8°C); 40 to 90°F (4.4 to 32.3°C); -4 to 140°F (-20 to 60°C).
Response Time: 8 s.
Electrical Connections: Screw terminal block.
Drift: <0.25% RH/year.
RH Sensor: Capacitance polymer.
Enclosure Material: Polycarbonate.
Enclosure Rating: IP20.
Display: Optional LCD; Switch selectable %RH or dew point, °F/°C.
Display Resolution: RH: 1%; Temperature: 0.1°F (0.1°C); Dew point: 1°F (1°C).
Weight: 4.4 oz (125 g).
Compliance: CE.

MODEL CHART

Example	RHP	-3	N	4	A	-LCD	RHP-3N4A-LCD
Series	RHP						Humidity/temperature dew point transmitter
Accuracy		2 3 5					2% accuracy 3% accuracy 5% accuracy
Housing			E N				European style wall mount North American style wall mount
Humidity/Dew Point Output				4			4-20 mA/0-5 VDC/0-10 VDC
Temperature Output					0 4 A B C D E F		None 4-20 mA/0-5 VDC/0-10 VDC 10K Ω @ 25°C thermistor type III 10K Ω @ 25°C thermistor type II 3K Ω @ 25°C thermistor 100 Ω RTD DIN 385 1K Ω RTD DIN 385 20K Ω @ 25°C thermistor
Options						LCD NIST	LCD display NIST traceable calibration certificate

ACCESSORIES

Model	Description
A-449	Remote LCD display allows remote indication of select Dwyer wall mount transmitters for validation or certification purposes
SCD-PS	100-240 VAC/VDC to 24 VDC power supply

A-449

Dwyer

SERIES RHPLC

WALL MOUNT HUMIDITY/TEMPERATURE TRANSMITTER

2% or 3% Humidity Sensor, Passive Temperature Outputs

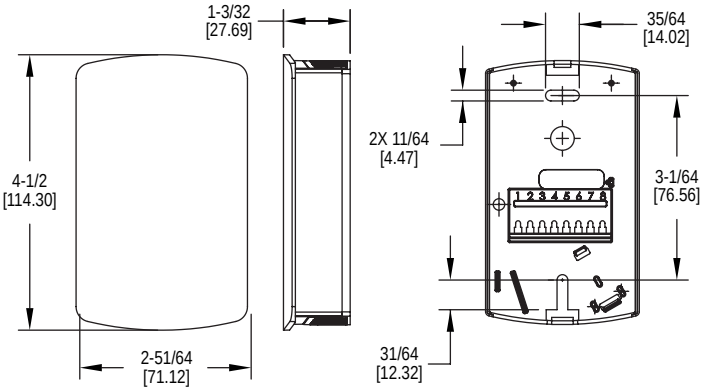

The **Series RHPLC Wall Mount Humidity/Temperature Transmitter** is a compact economical sensor for the building automation marketspace. The stylish housing is well vented to provide air flow across the sensor to improve measurement accuracy. Each unit utilizes a capacitive polymer sensing element to deliver a proportional analog output. A combination humidity and temperature model can be configured with current, voltage, RTD, or thermistor output. A wide selection of passive RTD or thermistor temperature sensors are available in this series.

BENEFITS/FEATURES

- Reduced installation cost with combined humidity and temperature sensing
- Wide application environments from a large selection of temperature sensors and 2% to 3% accuracies

APPLICATIONS

- Air economizers
- Room comfort monitoring

MODEL CHART

Example	RHPLC	-3	N	2	A	-FC	RHPLC-3N2A-FC
Series	RHPLC						Humidity/temperature transmitter
Accuracy		2					2% accuracy
		3					3% accuracy
Housing			N				North American style wall mount
Humidity Output				1			Current 4-20 mA
				2			Voltage 0-10 VDC
				3			Voltage 0-5 VDC
Temperature Output					0		None
					1		Current 4-20 mA
					2		Voltage 0-10 VDC
					3		Voltage 0-5 VDC
					A		10K Ω @ 25ºC thermistor type III
					B		10K Ω @ 25ºC thermistor type II
					C		3K Ω @ 25ºC thermistor
					D		100 Ω RTD DIN 385
					E		1K Ω RTD DIN 385
					F		20K Ω @ 25ºC thermistor
Options						FC	Factory calibration certificate (3% accuracy units)

ACCESSORIES

Model	Description
APT-40-5DN	AC power transformer, 120/208/240/277/480 VAC input, 24 VAC isolated output, 40 VA, dual hub
SCD-PS	100-240 VAC/VDC to 24 VDC power supply

SPECIFICATIONS

Sensor: Capacitive polymer.
Relative Humidity Range: 0-100% RH.
RH Accuracy: ±2% 10 to 90% RH @ 25°C for 2% accuracy units; ±3% 20 to 80% RH @ 25°C for 3% accuracy units.
RH Hysteresis: ±0.8%.
RH Repeatability: ±0.1% typical.
Temperature Output Range: -40 to 140°F (-40 to 60°C).
Passive Thermistor Temperature Sensor Accuracy: ±0.36ºF @ 77°F (±0.2°C @ 25°C).
Accuracy RTD Temp Sensor: DIN Class B; ±0.3°C @ 0°C (±0.54°F @ 77°F).
Accuracy Current/Voltage Temperature Output: ±0.9°F @ 77°F (±0.5°C @ 25°C).
Temperature Limits: Operating: -40 to 140°F (-40 to 60°C); Storage: -40 to 176°F (-40 to 80°C).
Power Requirements: 10-35 VDC for 4-20 mA or 0-5 VDC output; 15-35 VDC for 0-10 VDC output; 10-29 VAC for 0-5 VDC output; 15-29 VAC for 0-10 VDC output.
Response Time: 8 s (τ_{63}).
Electrical Connections: Screw terminal block.
Drift: <0.25% RH/year.
Enclosure Material: Polycarbonate.
Weight: 4.4 oz (125 g).
Compliance: CE.

Dwyer

SERIES RHP

HUMIDITY/TEMPERATURE TRANSMITTERS

Passive Temperature Outputs, Sintered Filter Options

CALIBRATION SERVICES AVAILABLE

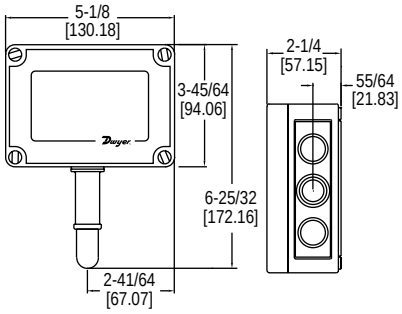

Sintered filter version

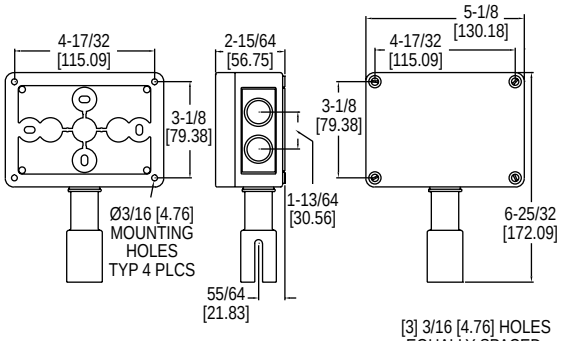

OSA (outside air)

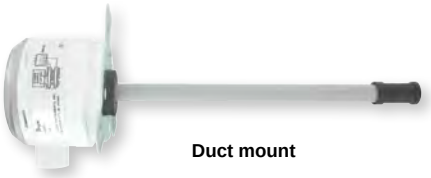

Duct mount

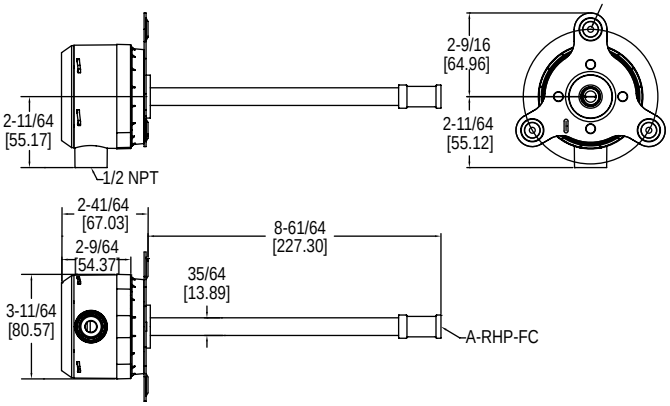

The **Series RHP Humidity/Temperature Transmitters** combine the voltage or current humidity transmitter output with a passive temperature thermistor or RTD output. Featuring polymer capacitance humidity sensors, models are available with 2%, 3% or 5% accuracies. Duct mounted transmitters are available with an optional two-line alpha numeric LCD display.

BENEFITS/FEATURES

- Reduced installation cost with combined humidity and temperature
- Wide application environment from a large selection of temperature sensors and 2%, 3% and 5% accuracies
- Reduced system operating costs with radiation shield protecting the sensor from radiant heat

APPLICATIONS

- Air economizers
- Outdoor temperature and relative humidity reference
- Pool room humidity monitoring

MODEL CHART

Example	RHP	-2	D	1	A	-LCD	RHP-2D1A-LCD
Series	RHP						RH/passive temperature sensor transmitter
Accuracy		2 3 5					2% accuracy 3% accuracy 5% accuracy
Housing Type			D O S R				Duct mount with plastic hydrophobic filter OSA (outside air) OSA with sintered filter* Radiation shield
RH Output				1 2 3			4-20 mA 0-10 V 0-5 VDC
Temperature Sensor					0 1 2 3 A B C D E F		None 4-20 mA 0-10 VDC 0-5 VDC 10 kΩ @ 25°C thermistor type III 10 kΩ @ 25°C thermistor type II 3 kΩ @ 25°C thermistor 100 Ω RTD DIN 385 1K Ω RTD DIN 385 20K Ω @ 25°C thermistor
Options						LCD NIST	LCD display NIST traceable calibration certificate

*Use OSA with sintered filter models when purchasing Series RHRS radiation shield separately.

SPECIFICATIONS

Relative Humidity Range: 0 to 100% RH.
Temperature Range: -40 to 140°F (-40 to 60°C).
Accuracy, RH: RHP-2XXX ±2% 10-90% RH @ 25°C; RHP-3XXX ±3% 20-80% RH @ 25°C; RHP-5XXX ±5% 20-80% RH @ 25°C.
Accuracy, Thermistor Temp Sensor: ±0.2°C @ 25°C (±0.36°F @ 77°F).
Accuracy, RTD Temp Sensor: DIN Class B; ±0.3°C @ 0°C (±0.54°F @ 32°F).
Accuracy, Solid State Band Gap: ±0.9°F @ 77°F (±0.5°C @ 25°C).
Hysteresis: ±1%.
Repeatability: ±0.1% typical.
Temperature Limits: -40 to 140°F (-40 to 60°C).
Storage Temperature: -40 to 176°F (-40 to 80°C).
Compensated Temperature Range: -4 to 140°F (-20 to 60°C).
Power Requirements: 4-20 mA loop powered models: 10-35 VDC; 0-5/10 V output models: 15-35 VDC or 15-29 VAC.
Output Signal (Model Dependent): 4-20 mA; 0-5/10V @ 5 mA max.
Response Time: 15 s.
Electrical Connections: Removable screw terminal block.
Conduit Connection: Duct mount: 1/2″ NPS; OSA: 1/2″ (22.3 mm).
Drift: <1% RH/year.
RH Sensor: Capacitance polymer.
Temperature Sensor: Types 1, 2, 3: Solid state band gap; Curves A, B, C: Thermistor; Curves D, E: Platinum RTD DIN 385.
Enclosure Material: Duct mount sensor tube: PVC-UL 94 V-0; Duct mount sensor cap: Polycarbonate ABS blend-greater than UL 94 V-0; Duct mount electronics housing and cover: Makrolon® polycarbonate-UL 94V-HB; OSA: Polycarbonate.
Enclosure Rating: Duct mount: NEMA 4X (IP66) for housing only; OSA: NEMA 4X (IP66).
Display: Duct mount only, optional 2-line alpha numeric, 8 characters/line.
Display Resolution: RH: 0.1%; 0.1°F (0.1°C).
Weight: Duct mount: .616 lb (.3 kg); OSA: 1 lb (.45 kg).
Compliance: CE.

ACCESSORIES

Model	Description
A-RHP-FC	Replacement plastic hydrophobic filter
A-RHP-RT	Retrofit tool for fitting O-ring on RHP-D/M models for new filter A-RHP-FC

Makrolon® is a registered trademark of Covestro AG.

Dwyer

SERIES RHRS

OUTSIDE AIR HUMIDITY RADIATION SHIELDS

6 or 10 Plate Design, Integral Pipe Mounting Kit

Picture shown with Series RHP humidity transmitter* (sold separately)

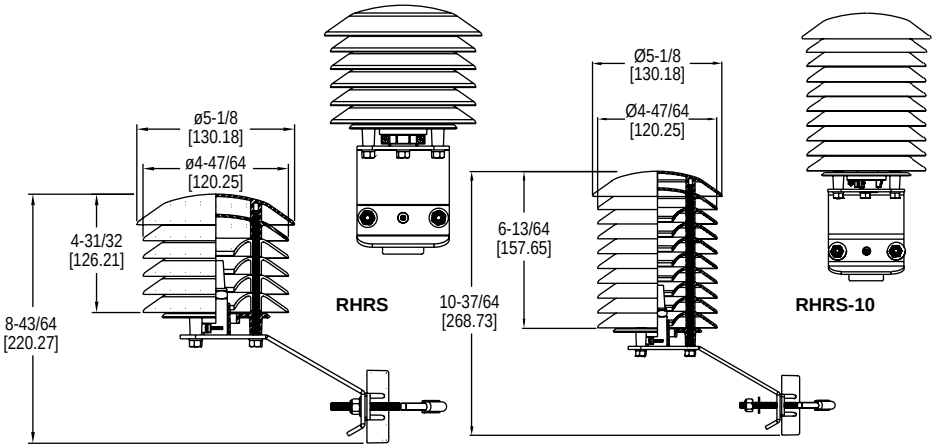

The **Series RHRS Outside Air Humidity Radiation Shields** protects outside air humidity transmitters from rain and radiated heat. With the curved shape and color of the plates, air flow is able to move across the sensor to keep radiated temperatures from rooftops and surrounding surfaces from affecting humidity readings.

BENEFITS/FEATURES
- Adjustable sensor mounting collar works with Dwyer RHP sintered filter outdoor air humidity transmitters or other RH devices
- Universal mount fits 3/4″ to 1-1/2″ pipe or flat surfaces

APPLICATIONS
- Building outside air reference
- Weather stations

MODEL CHART

Model	Description
RHRS	6 plate radiation shield
RHRS-10	10 plate radiation shield

Note: Only sintered filter OSA models of Series RHP are compatible with the shield.

SERIES WHT

WEATHER-RESISTANT HUMIDITY/TEMPERATURE TRANSMITTER

Compact Housing, Sintered Filter

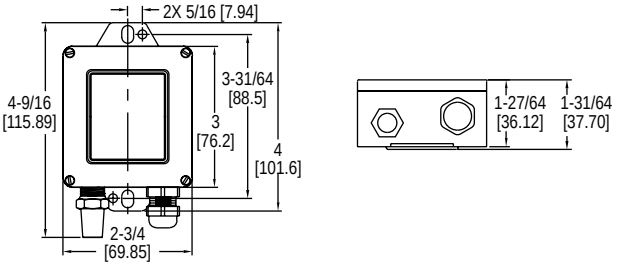

The compact **Series WHT Weather-Resistant Humidity/Temperature Transmitter** is designed to withstand the elements. A removable sintered filter protects the polymer capacitance sensor from solid objects that may come in contact with the transmitter. The transmitter is available with 4-20 mA or 0-10 VDC output signals for both temperature and humidity. This transmitter is ideal for measuring outside air temperature and humidity levels for air handling economizer applications.

BENEFITS/FEATURES
- Easy installation into tight spaces with compact NEMA 3S housing
- Reduced installation costs with combination RH and temperature outputs as required

APPLICATIONS
- Air handling economizers
- Air environment monitoring in agriculture or livestock cultivation houses

MODEL CHART

Model	Accuracy	RH Output	Temperature
WHT-310	3%	4-20 mA	None
WHT-311	3%	4-20 mA	4-20 mA
WHT-320	3%	0-10 VDC	None
WHT-322	3%	0-10 VDC	0-10 VDC
WHT-330	3%	0-5 VDC	None
WHT-333	3%	0-5 VDC	0-5 VDC
WHT-31A	3%	4-20 mA	10 kΩ Type III
WHT-32A	3%	0-10 VDC	10 kΩ Type III

Note: For 2% accuracy, change the leading 3 to a 2.
Example: WHT-210

SPECIFICATIONS

Relative Humidity Range: 0 to 100% RH.
Temperature Range: -40 to 140°F (-40 to 60°C).
Sensor Accuracy, RH: ±2% @ 20 to 80% RH, ±3% @ 10 to 20%, 80 to 90% RH.
Accuracy, Temp Models with 4-20 mA Temp. Output: ±0.9°F @ 77°F (±0.5°C @ 25°C).
Accuracy, Temp Models with Passive Thermistor Temp Sensor: ±0.36°F @ 77°F (±0.2°C @ 25°C).
Hysteresis, RH: ±1%.
Repeatability, RH: ±0.1% typical.
Temperature Limits: -40 to 140°F (-40 to 60°C).
Storage Temperature: -40 to 176°F (-40 to 80°C).
Compensated Temperature Range, RH: -4 to 140°F (-20 to 60°C).
Power Requirements: 4-20 mA loop powered models: 10-35 VDC; 0-10 V output models: 15-35 VDC or 15-29 VAC; 0-5 V output models: 10-35 VDC or 10-29 VAC.
Output Signal: 4-20 mA loop powered models: 4-20 mA; 0-10 V output models: 0-10 V @ 5 mA max; 0-5 V output models: 0-5 V @ 5 mA max.
Response Time: 15 s.
Electrical Connections: Removable screw terminal block.
Drift: <1% RH/year.
RH Sensor: Capacitance polymer.
Temperature Sensor: 4-20 mA output, solid state band gap. Passive output: 10K @ 25°C thermistor (Dwyer curve A).
Enclosure: ABS.
Enclosure Rating: Designed to meet NEMA 3S (IP54).
Weight: 0.3 oz (8.5 g).
Compliance: CE.

Dwyer

SERIES RH-R

HUMIDITY/TEMPERATURE TRANSMITTER

Remote Mount, Field Replaceable Sensor Filter, Up to 16´ Cable

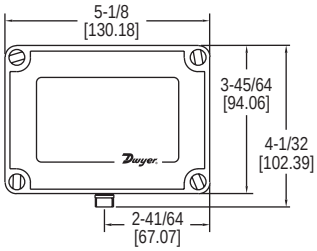

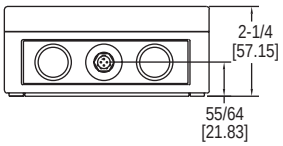

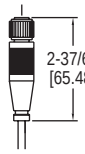

Electrical

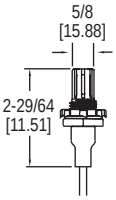

Process

Probe connections

The **Series RH-R Humidity and Temperature Transmitter** is the ideal transmitter for those applications where space is limited. The compact sensor is protected by a removable filter. It can be mounted up to 16 feet away from the weatherproof base. The Series RH-R is ideal for environmental chambers, rubber bladder burst detection and air handler applications.

BENEFITS/FEATURES
- Cable lengths from 4 to 16´
- Remote housing allows for flexibility sensing where space may be limited

APPLICATIONS
- Process system monitoring
- Environmental chambers
- Air economizers

SPECIFICATIONS

Service: Dry clean air.
Relative Humidity Range: 0 to 100% RH.
Temperature Range: -40 to 140°F (-40 to 60°C).
Accuracy: ±2% @ 10-90%.
Temperature Limits: -40 to 140°F (-40 to 60°C).
Storage Temperature: -40 to 176°F (-40 to 80°C).
Compensated Temperature Range: -4 to 140°F (-20 to 60°C).
Power Requirements: 10-35 VDC.
Output Signal: 4-20 mA loop powered.
Response Time: Less than 15 s.
Electrical Connections: Terminal block.
Conduit Connection: 1/2˝ NPT.
Process Connection: 1/2 NPSM.
Drift: < 1%/year.
RH Sensor: Capacitance polymer
Cable Length: Up to 16´.
Housing Material: Polycarbonate, aluminum enclosure.
Enclosure Rating: NEMA 4X (IP66).

MODEL CHART

Model	Cable Length	Description	Output	Model	Cable Length	Description	Output
RHU-R004	4´	Humidity	Current	**RHT-R004**	4´	Humidity/temperature	Current
RHU-R008	8´	Humidity	Current	**RHT-R008**	8´	Humidity/temperature	Current
RHU-R012	12´	Humidity	Current	**RHT-R012**	12´	Humidity/temperature	Current
RHU-R016	16´	Humidity	Current	**RHT-R016**	16´	Humidity/temperature	Current

SERIES 657

RELATIVE HUMIDITY/TEMPERATURE TRANSMITTERS

Dual Channel Design for Simultaneous 4-20 mA Output Signals

CALIBRATION SERVICES AVAILABLE

657

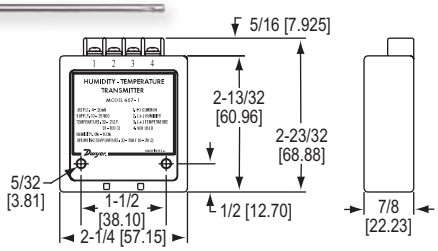

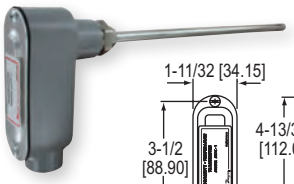

657C

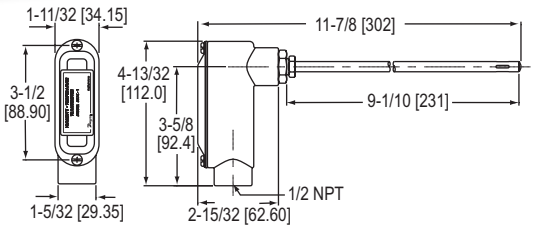

The **Series 657 Relative Humidity/Temperature Transmitters** provide two 4-20 mA channels to produce separate output signals for both relative humidity and temperature. These devices deliver ±2% accuracy for humidity and ±1°F for temperature measurements. Stainless steel probe can be easily mounted to most ductwork using either of the two optional kits below.

BENEFITS/FEATURES
- Polymer film humidity and thin film RTD temperature sensors offer highly reliable and stable measurements.
- Remote mount housing offers installation flexibility (657-1)
- Rugged die-cast aluminum housing is great for industrial applications (657C-1)

APPLICATIONS
- Cleanroom monitoring
- HVAC/building control monitoring

SPECIFICATIONS

Service: Dry clean air.
Range: Relative humidity: 0 to 100%; Temperature: 32 to 212°F (0 to 100°C).
Accuracy: Relative humidity: ±2% (10 to 90% RH), ±3% (0 to 10% and 90 to 100% RH); Temperature ±1°F (0.5°C).
Temperature Limits: 32 to 140°F (0 to 60°C).
Pressure Limits: 1 psi (.07 bar).
Compensated Temperature Range: 32 to 140°F (0 to 60°C).
Power Requirements: 10-35 VDC.
Output Signal: 2 channels each 4-20 mA. Loop powered on the RH channel.
Electrical Connections: 4 screw type terminals.
Mounting Orientation: Mount in any position.
Probe: 657-1: SS 5/16˝ x 10˝ (0.8 x 25.4 cm); 657C-1: 5/16˝ x 9-1/10˝ (0.8 x 23.1 cm).
Weight: 657-1: 5.5 oz (156 g); 657C-1: 10 oz (284 g).

MODEL CHART

Model	Description
657-1	RH/temperature transmitter
657C-1	RH/temperature transmitter - conduit housing

OPTIONS

To order add suffix:	Description
-NIST	NIST traceable humidity calibration certificate
Example: 657C-1-NIST	

ACCESSORIES

Model	Description
A-158	Split flange
A-159	Mounting gland

A-158

A-159

Dwyer

SERIES HHT

HAZARDOUS AREA HUMIDITY/TEMPERATURE TRANSMITTER

Intrinsically Safe or Explosion-Proof Models

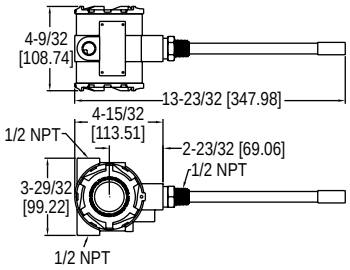

The **Series HHT Hazardous Area Humidity/Temperature Transmitter** takes accurate measurements in the harshest of environments. The explosion-proof model is offered with 4-20 mA output for humidity only. The intrinsically safe version is offered with 4-20 mA output for humidity and temperature, and do require an intrinsically safe barrier to meet hazardous area approvals.

BENEFITS/FEATURES
- FM approved explosion-proof and intrinsically safe models
- Integral LCD option
- Dual temperature and relative humidity output models

APPLICATIONS
- Process monitoring
- Offshore HVAC monitoring
- Dust and grain handling

MODEL CHART

Model	Protection	Description	Display
HHT-EU	Explosion-proof	Humidity	No
HHT-IU	Intrinsically safe	Humidity	No
HHT-IT	Intrinsically safe	Humidity/temperature	No
HHT-EU-LCD	Explosion-proof	Humidity	Yes
HHT-IT-LCD	Intrinsically safe	Humidity/temperature	Yes

ACCESSORIES

Model	Description
A-287	Mounting bracket for pipe or surface mounting (Includes bracket and two 2″ U-bolts)
A-450	Replacement sintered filter
KFD0-SCS-EX1.55❶	Loop powered galvanic isolator

SPECIFICATIONS

Relative Humidity Range: 0 to 100% RH.
Temperature Range: -40 to 140°F (-40 to 60°C).
Accuracy: ±2% 10 to 90% RH, ±0.9°F at 77°F (±0.5°C at 25°C).
Hysteresis: ±1%.
Repeatability: ±0.1% typical.
Temperature Limits: -40 to 140°F (-40 to 60°C).
Storage Temperature: -40 to 176°F (-40 to 80°C).
Compensated Temperature: -40 to 140°F (-40 to 60°C).
Power Requirements: For intrinsically safe models HHT-IX, 9.5-28 VDC. For explosion-proof models HHT-EX, 16.5-28 VDC.
Output Signal: 4-20 mA, 2 channels for humidity/temperature models (loop power on RH).
Response Time: 15 s.
Electrical Connections: Screw terminal block.
Conduit Connection: 1/2 female NPT.
Drift: < 1% RH/year.
RH Sensor: Capacitance polymer.
Temperature Sensor: Solid state band gap.
Housing Material: Aluminum.
Display: Optional 2 line alpha numeric, 8 characters/line. Temperature display is °F/°C selectable.
Display Resolution: RH: 0.1%; Temperature: 0.1°F (0.1°C).
Enclosure Rating: NEMA 4X (IP66). Models HHT-EX: FM Explosion- Proof, Class I Div. 1 Group B, C, D, Class II Div. 1 Group E, F, G, Class III Div. 1; Models HHT-IX: FM Intrinsically Safe, Class I Div. 1 Group A, B, C, D, Class II Div. 1 Group E, F, G, Class III Div. 1 T4.
Weight: 2 lb 8 oz (1134 g).
Compliance: CE, FM.

❶See page 366 (Model KFD0)

SERIES CDWP

CARBON DIOXIDE TRANSMITTER

NDIR CO_2 Sensor with Universal Outputs in an Industrial Housing

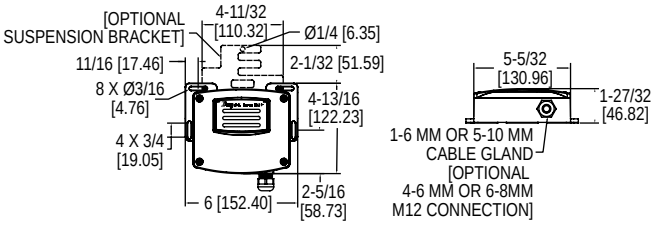

The **Series CDWP Carbon Dioxide Transmitter** accurately monitors the CO_2 concentration in industrial and indoor environments to help achieve energy savings. The CDWP utilizes a rugged IP54 aluminum housing with an exterior gray finish coat that was tested to withstand a 168 hour salt spray corrosion test. This ruggedized housing helps to protect the sensor from splashing liquid and airborne dust or debris making the Series CDWP a great fit for animal husbandry applications and confined feeding operations.

BENEFITS/FEATURES
- No durability concerns with the rugged aluminum housing
- No water ingress or corrosion concerns with the IP54 housing that withstands 168 hour salt spray testing
- Reduce operation costs using a low energy, reliable, and repeatable CO_2 sensor

APPLICATIONS
- Animal husbandry
- Mechanical room
- CO_2 refrigeration monitoring
- Greenhouses

SPECIFICATIONS

Sensor: NDIR.
Range: CO_2: 0 to 2000, 0 to 5000, or 0 to 10000 PPM (depending on model).
Accuracy: CO_2: ±40 PPM + 3% of reading (2000 PPM); ±50 PPM + 5% of reading (5000 PPM); ±50 PPM + 10% of reading (10000 PPM).
Temperature Dependence: ±8 PPM/°C at 1100 PPM (2000 and 5000 PPM); N/A (10000 PPM).
Non-Linearity: 16 PPM (2000 and 5000 PPM); N/A (10000 PPM).
Pressure Dependence: 0.13% of reading per mm of Hg (2000 and 5000 PPM); N/A (10000 PPM).
Response Time: 300 s (τ_{63}) (2000 and 5000 PPM); 2 min for 90% step change (10000 PPM).
Temperature Limits: 32 to 122°F (0 to 50°C).
Humidity Limits: 10 to 95% RH (non-condensing, 2000 and 5000 PPM); 0 to 85% RH (non-condensing, 10000 PPM).
Power Requirements: 16-35 VDC or 19-28 VAC.
Power Consumption: Average: 2 w; Peak: 3.75 w.
Output: Current: 4-20 mA (max. 500 Ω); Voltage: 0-5 VDC or 0-10 VDC (min. 500 Ω).
Enclosure Rating: IP54.
Mounting Orientation: Vertically, with electrical connections pointing downward.
Weight: 26.24 oz (744 g).
Compliance: CE.

MODEL CHART

Model	Range	Mounting Style	Cable Gland
CDWP-05W-C1	0 to 5,000 PPM	Wall	1 to 6 mm
CDWP-05W-C5	0 to 5,000 PPM	Wall	5 to 8 mm
CDWP-10W-C1	0 to 10,000 PPM	Wall	1 to 6 mm
CDWP-10W-C5	0 to 10,000 PPM	Wall	5 to 8 mm
CDWP-02W-C5	0 to 2,000 PPM	Wall	5 to 8 mm

ACCESSORIES

Model	Description
A-CDWP-H	Suspended mount bracket
A-CDWP-L	Replacement lid with filter material

Dwyer
SERIES CDT

CARBON DIOXIDE/TEMPERATURE TRANSMITTERS

NDIR CO_2 Sensor, Universal Outputs, Optional Relay

North American style

DSA* compliant option -S

Duct

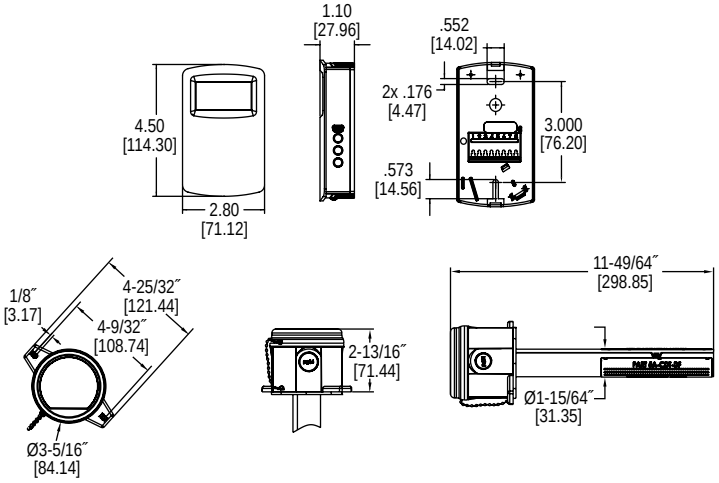

*Division of the State Architect - California

The **Series CDT Carbon Dioxide and Temperature Transmitters** accurately monitor the CO_2 concentration and temperature in indoor environments to help achieve energy savings. In order to achieve a higher level of accuracy, the Series CDT includes barometric pressure adjustment. The CO_2 universal output allows users to select the transmitter output to be 4-20 mA, 0-5 VDC, or 0-10 VDC to work with virtually any building management controller.
For applications that require visual indication, the wall mount configurations of the Series CDT can be ordered with an integral LCD display. To prevent tampering, the action of the buttons can be locked out using an internal dip switch selection.
The Series CDT CO_2 transmitters are available with a -S option that provides the necessary attributes and parameters to be compliant with DSA requirements for monitoring CO_2 levels in schools. There is a front facing LED that illuminates when the CO_2 level exceeds 1100 PPM.

BENEFITS/FEATURES

- Minimize inventory and save time by combining CO_2 and temperature measurements into one transmitter
- Reduces the number of devices mounted in the space with integral humidity and temperature sensors
- Requires minimal maintenance with Automatic Baseline Correction (ABC) to account for sensor drift
- Reduce operation costs using a low energy, reliable, and repeatable CO_2 sensor
- Simplify installation with backplate electrical connection

APPLICATIONS

- Demand control ventilation in schools, office buildings, hospitals, and other indoor environments
- LEED® certification

SPECIFICATIONS

Sensor: NDIR, 15 year life expectancy.
Range: CO_2: 0 to 2000 or 0 to 5000 PPM (depending on model); Temperature: 32 to 122°F (0 to 50°C).
Accuracy:** CO_2: ±40 PPM + 3% of reading (2000 PPM CO_2); ± 50 PPM + 5% of reading (5000 PPM CO_2); Temperature: ±1°C @ 25°C.
Response Time: 2 min for 90% step change.
Temperature Limits: 32 to 122°F (0 to 50°C).
Humidity Limits: 0 to 85% (non-condensing).
Power Requirements: 16-35 VDC or 19-28 VAC.
Power Consumption: Average: 2 w; Peak: 3.75 w.
Output: Current: 4-20 mA (max. 500 Ω); Voltage: 0-5 VDC or 0-10 VDC (min. 500 Ω); Relay: SPST NO rated 2A @ 30 VDC; RTD or thermistor per r-t curves on page 4 (depending on model).
Compliance: CE.

**The specified CO_2 accuracy is only guaranteed after three weeks of continuous operation in environments which are intermittently occupied.

MODEL CHART

Example	CDT	-2	N	4	4	-LCD	CDT-2N44-LCD
Series	CDT						Carbon dioxide/temperature transmitter
Range		2 5					0 to 2000 PPM CO_2 range 0 to 5000 PPM CO_2 range
Configuration			N D				North American style wall mount Duct mount
CO_2				4			4-20 mA / 0 to (5 or 10) VDC
Temperature Output					0 4 A B D E F		None 4-20 mA / 0 to (5 or 10) VDC 10 KΩ NTC thermistor type III 10 KΩ NTC thermistor type II Pt100 Ω RTD Pt1000 Ω RTD 20 KΩ NTC thermistor
Options						FC LCD RLY S	Factory calibration certificate LCD display (wall only) Relay School

ACCESSORIES

Model	Description
A-449	Remote LCD display allows remote indication of select Dwyer® wall mount transmitters for validation or certification purposes
A-449A	Remote LCD display with buttons allows remote indication and calibration of select Dwyer® wall mount transmitters for validation and certification purposes

A-449

A-449A

LEED® is a registered trademark of the U.S. Green Building Council

Dwyer

SERIES CDTA

COMMUNICATING CARBON DIOXIDE DETECTORS

Measures CO_2, Humidity, Temperature, Temperature Set Point with Override

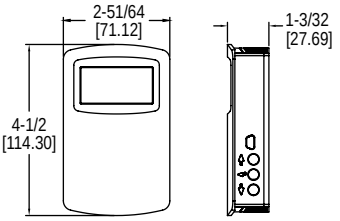

The **Series CDTA Communicating Carbon Dioxide Detectors** combine the function of three room sensors into a single, compact housing. Parameters include carbon dioxide, humidity, temperature, and temperature set point with override. A 4-wire connection and daisy chaining together reduces installation cost. The RS-485 MAC address is set up using on board DIP switches. Additional DIP switches are used to select Modbus® RTU or BACnet MS/TP and to limit access to the set up menu.
The barometric pressure can be programmed to correct for altitude. The humidity sensor is field replaceable without the need for additional calibration.
Optional integral and remote displays are available to display temperature, humidity, or temperature set point instead of CO_2.
For environments occupied 24 hours per day it is recommended to periodically expose the CO_2 sensor to outside ambient air.

BENEFITS/FEATURES
- Minimize inventory and save time by combining CO_2, RH and temperature measurements into one transmitter
- Reduce installation time with field selectable Modbus and BACnet communications
- Reduces the number of devices mounted in the space with integral humidity and temperature sensors
- Requires minimal maintenance with Automatic Baseline Correction (ABC) to account for sensor drift
- Prevent tampering with physical hardware lockout
- Easily installation with optional remote display tool and simple installation with backplate electrical connection

APPLICATIONS
- Demand control ventilation in schools, office buildings, hospitals, and other indoor environments
- LEED® certification

MODEL CHART

Model	Max CO_2 Level	Housing Style	Display
CDTA-2N000	2000 PPM	North American	No
CDTA-2N000-LCD	2000 PPM	North American	Yes
CDTA-5N000	5000 PPM	North American	No
CDTA-5N000-LCD	5000 PPM	North American	Yes

SPECIFICATIONS

Sensor (CO_2): NDIR, 15 year life expectancy; Humidity: Capacitive polymer; Temperature: Solid state band gap.
Range: CO_2: 0 to 2000 or 5000 PPM CO_2 (depending on model); Humidity: 0 to 100% RH; Temperature: 32 to 122°F (0 to 50°C).
Accuracy*: CO_2: ±40 PPM ±3% of reading 2000 PPM; ±50 PPM + 5% of reading 5000 PPM; RH: ±2% (10 to 90% RH); Temperature: ±1°C @ 25°C.
Response Time (CO_2): 2 min for 90% step change.
Temperature Limits: 32 to 122°F (0 to 50°C).
Humidity Limits: 0 to 85% RH (non-condensing).
Power Requirements: 10-42 VDC / 10-30 VAC.
Output: 2-wire RS-485, Modbus® RTU or BACnet MS/TP communication protocol.
Weight: 4.4 oz (125 g).
Compliance: BTL, CE.

*The specified CO_2 accuracy is only guaranteed after three weeks of continuous operation in environments which are intermittently occupied.

ACCESSORIES

Model	Description
A-449	Remote LCD display allows remote indication
A-CDT-KIT	Accessory kit including terminal block and power supply

OPTIONS

To order add suffix:	Description
-FC	Factory calibration certificate
Example: CDTA-2N000-FC	

LEED® is a registered trademark of the U.S. Green Building Council
Modbus® is a registered trademark of Schneider Electric USA, Inc.

SERIES CDTC

COMMUNICATING CARBON DIOXIDE SENSOR

NDIR CO_2 Sensor, Measures CO_2, Temperature, Temperature Set Point with Override

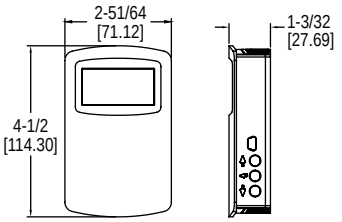

The **Series CDTC Communicating Carbon Dioxide Sensor** combines the function of two room sensors into a single, compact housing. Parameters include carbon dioxide, temperature, and temperature set point with override. A 4-wire connection and daisy chaining together reduces installation cost. The RS-485 MAC address is set up using on-board DIP switches. Additional DIP switches are used to select Modbus® RTU or BACnet MS/TP and to limit access to the set up menu. The barometric pressure can be programmed to correct for altitude.
Optional integral display is available to display temperature, or temperature set point instead of CO_2.
For environments occupied 24 hours per day it is recommended to periodically expose the CO_2 sensor to outside ambient air.

BENEFITS/FEATURES
- Minimize inventory and save time by combining CO_2 and temperature measurements into one transmitter
- Reduces the number of devices mounted in the space with integral temperature sensing
- Requires minimal maintenance with Automatic Baseline Correction (ABC) to account for sensor drift
- Field selectable Modbus® and BACnet communications reduces wiring
- Simplify installation with backplate electrical connection

APPLICATIONS
- Demand control ventilation in schools, office buildings, hospitals, and other indoor environments
- LEED® certification

MODEL CHART

Model	Max CO_2 Level	Housing Style	Display
CDTC-2N000	2000 PPM	North American	No
CDTC-2N000-LCD	2000 PPM	North American	Yes
CDTC-5N000	5000 PPM	North American	No
CDTC-5N000-LCD	5000 PPM	North American	Yes

SPECIFICATIONS

Range: 0 to 2000 or 5000 PPM CO_2 (depending on model); 32 to 122°F (0 to 50°C) temperature.
Accuracy*: ±40 PPM +3% of reading (2000 PPM), ±50 PPM + 5% of reading (5000 PPM).
Response Time: 2 min for 90% step change.
Sensor Technology: NDIR, 15 year life expectancy.
Temperature Limits: 32 to 122°F (0 to 50°C).
Output: 2-wire RS-485, Modbus® RTU or BACnet MS/TP communication protocol.
Humidity Limits: 0 to 85% RH (non-condensing).
Power Requirements: 10-42 VDC / 10-30 VAC.
Weight: 4.4 oz (125 g).
Compliance: BTL, CE.

*The specified CO_2 accuracy is only guaranteed after three weeks of continuous operation in environments which are intermittently occupied.

ACCESSORIES

Model	Description
A-449	Remote LCD display allows remote indication
A-CDT-KIT	Accessory kit including terminal block and power supply

OPTIONS

To order add suffix:	Description
-FC	Factory calibration certificate
Example: CDTC-2N000-FC	

LEED® is a registered trademark of the U.S. Green Building Council
Modbus® is a registered trademark of Schneider Electric USA, Inc.

Dwyer

SERIES CDTR

CARBON DIOXIDE/RH/TEMPERATURE TRANSMITTERS

NDIR CO_2 Sensor, Universal CO_2/RH Outputs, Optional Relay

North American style

DSA* compliant option -S

Duct

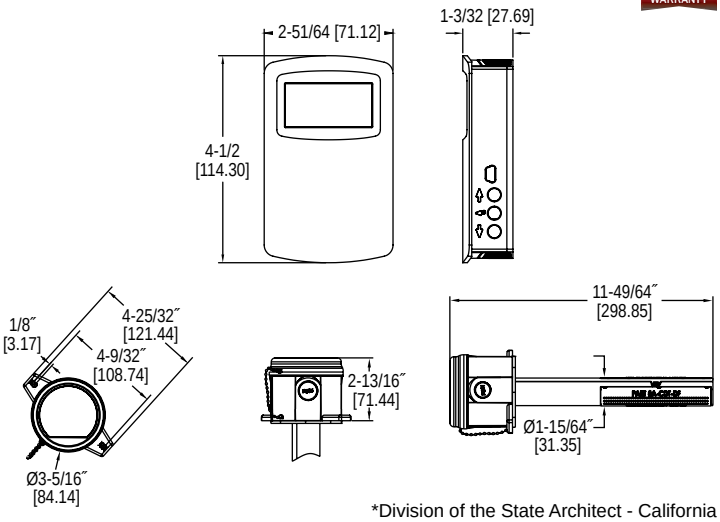

*Division of the State Architect - California

The **Series CDTR Carbon Dioxide, Relative Humidity and Temperature Transmitters** reduce the number of sensors mounted on a wall or in a duct. By combining CO_2, RH, and temperature in one device, system integrators are able to reduce installation time while lowering material cost at the same time.
Like our popular Series CDT Carbon Dioxide Transmitter, a non-dispersive infrared (NDIR) sensor is used to make the CO_2 measurement. In order to achieve the best possible accuracy, the Series CDTR also includes digital barometric pressure adjustment.
Universal outputs for both carbon dioxide and relative humidity allow users to select the transmitter output to be 4-20 mA, 0-5 VDC, or 0-10 VDC to work with virtually any building management controller. Additionally, passive thermistor or RTD sensor can be ordered for a temperature output.
For applications that require visual indication, the wall mount configurations of the Series CDTR can be ordered with an integral LCD display. The display can be configured to display temperature only, relative humidity only, CO_2 only, CO_2 and humidity, or CO_2 and temperature. To prevent tampering, the action of the buttons can be locked out using an internal jumper selection.
The Series CDTR CO_2 transmitters are available with a -S option that provides the necessary attributes and parameters to be compliant with DSA requirements for monitoring CO_2 levels in schools. There is a front facing LED that illuminates when the CO_2 level exceeds 1100 PPM.

BENEFITS/FEATURES

- Minimize inventory and save time by combining CO_2, RH and temperature measurements into one transmitter
- Reduces the number of devices mounted in the space with integral humidity and temperature sensors
- Requires minimal maintenance with Automatic Baseline Correction (ABC) to account for sensor drift
- Field selectable Modbus® and BACnet communications reduces wiring
- Simplify installation with backplate electrical connection
- Relay output option

APPLICATIONS

- Demand control ventilation in schools, office buildings, hospitals, and other indoor environments
- LEED® certification

SPECIFICATIONS

Sensor: NDIR, 15 year life expectancy.
Range: CO_2: 0 to 2000 or 0 to 5000 PPM (depending on model); Temperature: 32 to 122°F (0 to 50°C).
Accuracy:** CO_2: ±40 PPM + 3% of reading (2000 PPM CO_2); ± 50 PPM + 5% of reading (5000 PPM CO_2); RH: ±2% (10 to 90% RH) (for units configured with humidity output); Temperature: ±1°C @ 25°C.
Response Time: 2 min for 90% step change.
Temperature Limits: 32 to 122°F (0 to 50°C).
Humidity Limits: 0 to 85% (non-condensing).
Power Requirements: 16-35 VDC or 19-28 VAC.
Power Consumption: Average: 2 w; Peak: 3.75 w.
Output: Current: 4-20 mA (max. 500 Ω); Voltage: 0-5 VDC or 0-10 VDC (min. 500 Ω); Relay: SPST NO rated 2A @ 30 VDC; RTD or thermistor per r-t curves on page 4 (depending on model).
Compliance: CE.

**The specified CO_2 accuracy is only guaranteed after three weeks of continuous operation in environments which are intermittently occupied.

MODEL CHART

Example	CDTR	-2	N	4	A	4	-LCD	CDTR-2N4A4-LCD
Series	CDTR							Carbon dioxide/RH/ temperature transmitter
Range		2 5						0 to 2000 PPM CO_2 range 0 to 5000 PPM CO_2 range
Configuration			N D					North American style wall mount Duct mount
CO_2 Output				4				4-20 mA / 0 to (5 or 10) VDC
Temperature Output					0 A B D E F			None 10K Ω NTC thermistor type III 10K Ω NTC thermistor type II Pt100 Ω RTD Pt1000 Ω RTD 20K Ω NTC thermistor
RH Output						4		4-20 mA / 0 to (5 or 10) VDC
Options							FC LCD RLY S	Factory calibration certificate LCD display (wall only) Relay School

ACCESSORIES

Model	Description
A-449	Remote LCD display allows remote indication of select Dwyer® wall mount transmitters for validation or certification purposes
A-449A	Remote LCD display with buttons allows remote indication and calibration of select Dwyer® wall mount transmitters for validation and certification purposes

A-449

A-449A

LEED® is a registered trademark of the U.S. Green Building Council
Modbus® is a registered trademark of Schneider Electric USA, Inc.

Dwyer

SERIES CDTV

CARBON DIOXIDE/VOLATILE ORGANIC COMPOUND TRANSMITTERS

Simultaneously Outputs Both CO_2 / VOC

North American style

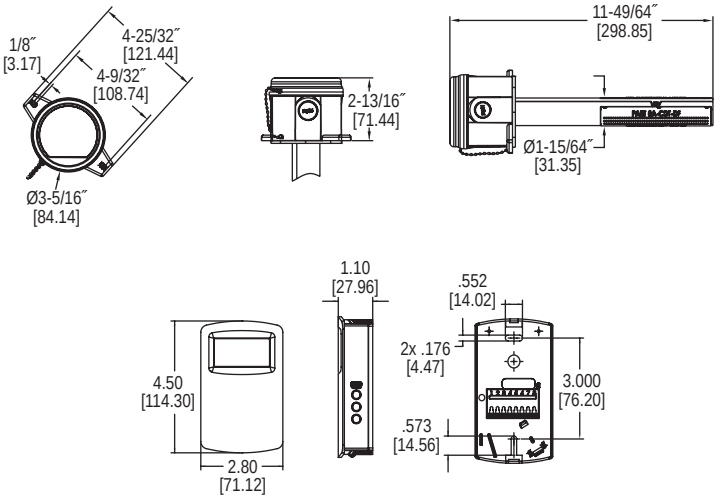

The **Series CDTV Carbon Dioxide/Volatile Organic Compound Transmitters** reduce energy cost in buildings by lowering the amount of conditioned air based on the occupancy of the space. By sensing both CO_2 and VOC, the transmitter can detect fumes that may need to be exhausted during lower occupancy periods.

BENEFITS/FEATURES

- Combination VOC and CO_2 outputs reduce labor and material costs
- Single beam dual wavelength NDIR CO_2 sensor allows for use in spaces that may be occupied 24 hours a day
- VOC output is correlated to be equivalent to CO_2 measurements
- Ventilate using ASHRAE's occupancy-based VRP Algorithm

APPLICATIONS

- HVAC applications in hospitals, schools, and commercial buildings
- Demand control ventilation
- Odor control
- Waiting rooms or other spaces that may be occupied 24 hours a day

MODEL CHART

Example	CDTV	-2	D	4	A	4	-RLY	CDTV-2D4A4-RLY
Series	CDTV							Carbon dioxide/VOC transmitter
Range		2 5						0 to 2000 PPM CO_2 range 0 to 5000 PPM CO_2 range
Configuration			D N					Duct North American style wall mount
CO_2 Output				4				4-20 mA / 0 to (5 or 10) VDC
Temperature Output					0 A B C D E F			None 10 KΩ NTC thermistor type III 10 KΩ NTC thermistor type II 3 KΩ NTC thermistor Pt100 Ω RTD Pt1000 Ω RTD 20 KΩ NTC thermistor
VOC Output						4		4-20 mA / 0 to (5 or 10) VDC
Options							COC FC LCD RLY	Certificate of calibration Factory calibration certificate LCD display (wall only) Relay

SPECIFICATIONS

Range: CO_2: 0 to 2000 or 0 to 5000 PPM (depending on model); VOC: 0 to 2000 PPM CO_2 equivalent.
Accuracy: CO_2: ±40 PPM ±3% of reading.
Temperature Dependence: ±8 PPM / °C at 1100 PPM.
Non-Linearity: CO_2: 16 PPM.
Pressure Dependence: CO_2: 0.13% of reading per mm of Hg.
Response Time: CO_2: 2 minutes for 99% step change; VOC: 5 minutes.
Temperature Limits: 32 to 122°F (0 to 50°C).
Duct Air Velocity Range: 0-4000 FPM (20.32 m/s).
Power Requirements: 16-35 VDC / 19-28 VAC.
Power Consumption: Average: 2 watts; Peak: 3.75 watts.
Sensor: CO_2: Single-beam, dual-wavelength NDIR; VOC: MEMS metal oxide semiconductor.
Output: Current: 0-20 mA, 4-20 mA, 0-10 mA, or 2-10 mA (depending on selection jumper, max 500 Ω); Voltage: 0-10 VDC, 2-10 VDC, 0-5 VDC, or 1-5 VDC (depending on selection jumper, min 500 Ω); Relay: SPST NO 2A @ 30 VDC.
Enclosure Rating: Duct mount: NEMA 4X (IP66) for housing only; Wall mount: IP20.
Weight: 5.6 oz (158.8 g).
Agency Approvals: CE.

Dwyer

SERIES GSTA & GSTC

CARBON MONOXIDE/NITROGEN DIOXIDE GAS TRANSMITTERS

High Accuracy Electrochemical Sensor, Universal Output or BACnet or Modbus® Communication Protocol Options

Wall mount with LCD

Wall mount without LCD

Duct mount

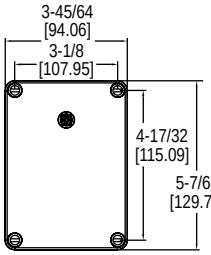

Wall mount

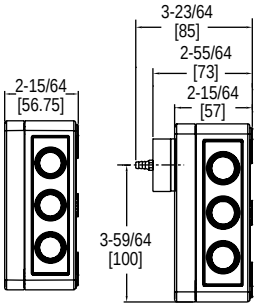

Duct mount

The **Series GSTA & GSTC Carbon Monoxide/Nitrogen Dioxide Gas Transmitters** monitor gas concentrations in mechanical rooms, underground parking garages and loading docks. The carbon monoxide transmitter is used to measure the exhaust of gasoline engines, while the nitrogen dioxide transmitter is used for diesel engines. The Series GSTA features field selectable current and voltage outputs while the Series GSTC features BACnet or Modbus® communication protocol, allowing gas sensing solutions that can be used with almost any building management controller.

BENEFITS/FEATURES

- Easy field maintenance with industrial grade replaceable sensors
- Reduced inventory of units with field selectable outputs
- Simplified setup for non-LCD units using the set-up display tool

APPLICATIONS

- Garage or loading dock ventilation
- Mechanical room monitoring

SPECIFICATIONS

Sensor: Field replaceable electrochemical, 2 years typical lifespan.
Range: NO_2: 10 PPM; GSTA CO: Switch selectable 200 or 500 PPM; GSTC CO: 500 PPM.
Output Drift: <5% per year in air.
Coverage Area: 5000 to 7500 sq ft typical.
Accuracy: CO: 2% FS, NO_2: 3% FS, at the time of calibration.
Resolution: CO: 1 PPM; NO_2: 0.1 PPM.
Temperature Limits: -4 to 122°F (-20 to 50°C).
Storage Temperature: For best sensor life, 32 to 68°F (0 to 20°C).
Humidity Limits: 15 to 90% RH constant; 0 to 99% RH intermittent.
Response Time: <45 s to 90% CO, <25 s to 90% NO_2.
Span and Zero Adjustment: Via onboard push-buttons or using optional A-449 display; GSTC models: Zero only via BACnet or Modbus® communication protocol.
Housing: UV resistant glass filled polycarbonate.
Output Signals: GSTA: Switch selectable 4-20 mA (loop powered), 0-5 V @ 5 mA, or 0-10 V @ 5 mA; Switch selectable 0-5 V/1-5 V and 0-10 V/2-10 V; Switch selectable normal or reverse output; GSTC: BACnet MS/TP, Modbus® RTU, or Modbus® ASCII (switch selectable) communication protocol.
Power Requirements: GSTA: Current output: 10-35 VDC, Voltage output: 15-35 VDC or 15-29 VAC; GSTC: 10-36 VDC or isolated 21.6-33 VAC, 5.7 mA @ 24 VDC.
Electrical Connection: Removable terminal block, knockouts for conduit fitting.
Calibration: Via onboard push-buttons (LCD model only) or using optional A-449 display. Span gas concentration is field selectable.
Enclosure Rating: IP64.
Weight: 1 lb (0.45 kg).
Compliance: CE.

MODEL CHART

Model	Gas	Output	Mount	Display
GSTA-C	CO	Universal current/voltage	Wall	None
GSTA-C-D	CO	Universal current/voltage	Duct	None
GSTA-C-LCD	CO	Universal current/voltage	Wall	LCD
GSTA-N	NO_2	Universal current/voltage	Wall	None
GSTA-N-D	NO_2	Universal current/voltage	Duct	None
GSTA-N-LCD	NO_2	Universal current/voltage	Wall	LCD
GSTC-C	CO	BACnet and Modbus®	Wall	None
GSTC-C-D	CO	BACnet and Modbus®	Duct	None
GSTC-C-LCD	CO	BACnet and Modbus®	Wall	LCD
GSTC-N	NO_2	BACnet and Modbus®	Wall	None
GSTC-N-D	NO_2	BACnet and Modbus®	Duct	None
GSTC-N-LCD	NO_2	BACnet and Modbus®	Wall	LCD

ACCESSORIES

Model	Description
A-449	Remote LCD display
A-505	CO replacement sensor
A-506	NO_2 replacement sensor
A-507	Calibration adaptor
A-GSTA-SE	Security enclosure
GCK-200CO-2000CO2	Calibration gas

A-GSTA-SE

GCK-200CO-2000CO2

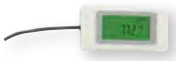

A-449

A-505

A-506

A-507

Modbus® is a registered trademark of Schneider Automation, Inc.

Dwyer

SERIES CMT200

CARBON MONOXIDE TRANSMITTERS

Current/Voltage Selectable Output, 200 PPM Range

CMT200

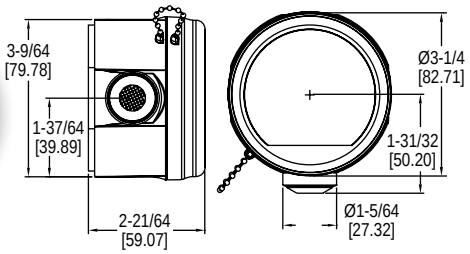

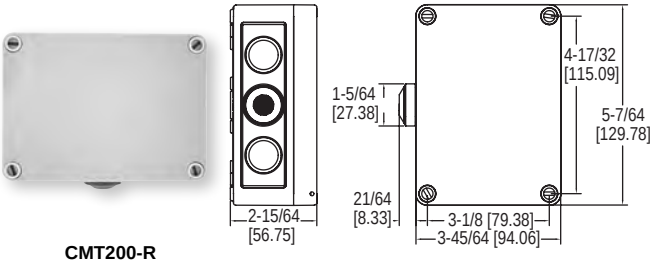

CMT200-R

The **Series CMT200 Carbon Monoxide Transmitters** provides a field selectable current or voltage output that is proportional to the gas concentration in underground parking garages, vehicle maintenance facilities, or mechanical rooms.

BENEFITS/FEATURES
- Field selectable current or voltage outputs
- Replaceable sensor
- Field calibration kits

APPLICATIONS
- Garage ventilation
- Mechanical room monitoring

MODEL CHART	
Model	**Description**
CMT200	Carbon monoxide transmitter
CMT200-R	Carbon monoxide transmitter with rugged housing

ACCESSORIES	
Model	**Description**
A-505	Replacement carbon monoxide sensor
A-507A	Calibration adaptor
A-GSTA-SE	Security enclosure
GCK-200CO-2000CO2	Calibration gas

SPECIFICATIONS

Sensor: Field replaceable electrochemical, 4 year typical lifespan.
Range: 0 to 200 PPM.
Coverage Area: 5000 to 7000 sq. ft. typical.
Accuracy: ±2% FS at the time of calibration.
Output Drift: <5% per year in air.
Temperature Limits: -4 to 122°F (-20 to 50°C).
Storage Temperature: For best sensor life, 32 to 68°F (0 to 20°C).
Humidity Limits: 15 to 90% RH constant; 0 to 99% RH intermittent.
Response Time: <45 s to 90% of final value.
Calibration: 15 turn span and zero adjustment potentiometers.
Housing: UV resistant polycarbonate.
Output: Jumper selectable 4-20 mA (loop powered) or 2-10 V (load must be >50 kΩ).
Power Requirements: Current output: 18-28 VDC; Voltage output: 18-28 VDC/VAC, reverse polarity protected.
Electrical Connection: Removable terminal block, includes two PG11 and one PG 16 knockouts for conduit fitting.
Weight: 0.28 lb (0.11 kg).
Compliance: CE.

SERIES CMS300

CARBON MONOXIDE TRANSMITTER AND SWITCH

Current/Voltage Selectable Output, Jumper Selectable SPDT Relay Contact

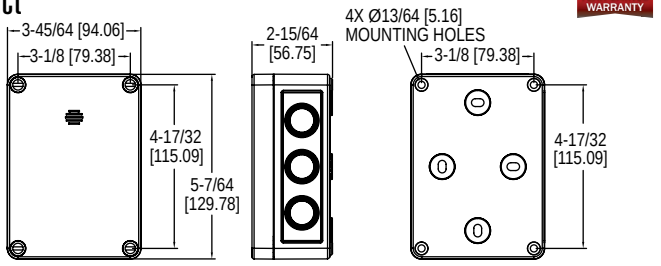

The **Series CMS300 Carbon Monoxide Transmitter and Switch** provides a field selectable current or voltage output that is proportional to the carbon monoxide concentration in underground parking garages, vehicle maintenance facilities, or mechanical rooms. An integral relay can be used for alarm conditions and is configured with preset jumper selectable ranges of 25, 60, or 150 PPM. Field calibration can be done by using Model GCK-200CO-2000CO2 calibration gas, Model A-507 calibration adaptor, and the on board zero and span potentiometers.

BENEFITS/FEATURES
- Field selectable current or voltage analog outputs
- Integral SPDT relay contact for low or high alarm
- Jumper selectable alarm set points of 25, 60, or 150 PPM
- UL recognized carbon monoxide sensing element
- Field calibration kits

APPLICATIONS
- Garage or loading dock ventilation
- Vehicle maintenance facilities
- Mechanical room monitoring

MODEL CHART	
Model	**Description**
CMS300	Carbon monoxide transmitter and switch

ACCESSORIES	
Model	**Description**
A-507	Calibration adaptor
A-GSTA-SE	Security enclosure
GCK-200CO-2000CO2	Calibration gas

SPECIFICATIONS

Sensor: Electrochemical, 5 years typical lifespan.
Range: 0-300 PPM.
Output Drift: <5% per year in air.
Temperature Effect: ±2% over range.
Coverage Area: 7,500 ft^2 (700 m^2) or 50 ft (15 m) radius.
Accuracy: ±5 PPM or 5% of reading for 0-300 PPM (whichever is greater).
Resolution: 1 PPM.
Temperature Range: -4 to 122°F (-20 to 50°C).
Storage Temperature: For best sensor life, 32°F to 68°F (0 to 20°C).
Humidity Range: 15-90% RH constant; 0-99% RH intermittent.
Response Time: <45 s to 90% of final value.
Calibration: 15 turn span and zero adjustment potentiometers.
Housing: UV resistant glass filled polycarbonate.
Analog Output: Jumper selectable 4-20 mA (loop powered) or 2-10 V (max. load 2 kΩ).
Enclosure Rating: IP64.
Switch Type: Single-pole double-throw (SPDT).
Relay Electrical Rating: 30 VDC, 250 VAC. N/O=5 A. N/C=3 A resistive.
Set Point: Jumper selectable 25, 60, or 150 PPM.
Set Point Differential/Hysteresis: 3% of scale.
Relay Action: Factory set for direct acting.
Weight: 1 lb (0.45 kg).
Compliance: Sensor is UL recognized component for ANSI/UL-2034, UL-2075, E340403, CE.

Dwyer

MODEL SL-2000

DUCT SMOKE DETECTOR

Early Smoke Detection in HVAC Systems

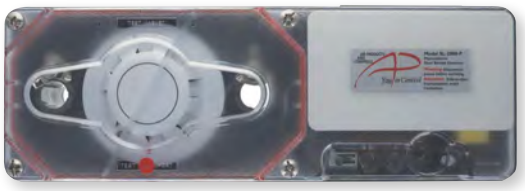

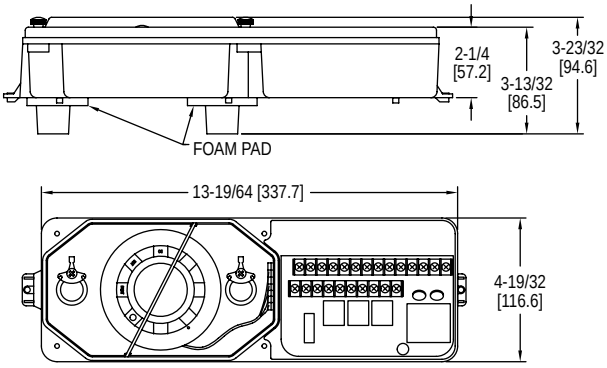

The **Model SL-2000 Duct Smoke Detector** is crucial for early detection of smoke and products of combustion present within HVAC ductwork. This model can be utilized in many different types of applications including commercial, industrial, and residential. The unit is designed to not only alarm when smoke is detected, but will also utilize relays to disable fans and blowers. The model comes complete with technician friendly "No-Tools Required" features to make installation and servicing simple and efficient.

BENEFITS/FEATURES

- Versatile installation applications with velocities up to 4000 FPM
- Easy performance verification with the built-in smoke and magnet test ports and clear cover to view status LED
- Simple installation with no tools required to load/remove sampling tubes

APPLICATIONS

- Early smoke detection in ductwork
- Commercial/industrial/residential HVAC
- BAS automation

SPECIFICATIONS

Sensor Type: Photoelectric or Ionization.
Air Velocity Range: 100 to 4000 FPM.
Ambient Temperature: SL-2000-P: 32 to 140°F (0 to 60°C).
Humidity Limits: 10-85% RH. Non-condensing/non-freezing.
Power Requirements: Standby: 230 VAC (12 mA), 115 VAC (22 mA), 24 VAC (55 mA), or 24 VDC (14 mA); Alarm: 230 VAC (18 mA), 115 VAC (32 mA), 24 VAC (190 mA), or 24 VDC (68 mA).
Electrical Rating: Alarm contacts: 2 sets form "C" rated at 10 A resistive @ 115 VAC and 1 set form "A" rated at 2 A; Trouble contacts: 1 set form "C" rated at 10 A @ 115 VAC.
Electrical Connections: Screw terminals.
Enclosure: Grey plastic backbox, clear plastic cover (Makrolon® 94 V-0).
Enclosure Rating: SL-2000: NEMA 1; WP-2000: NEMA 3R.
Weight: 2.5 lb.
Approvals: cULus (UL 268A) file # S2829, CSFM listed (3240-1004:105), MEA accepted (73-92-E; VOL. 27).

MODEL CHART

Model	Description
SL-2000-P	Conventional, 4-wire, universal voltage, photoelectric duct smoke detector

ACCESSORIES

Model	Description
55000-328APO	Photoelectric replacement sensor for SL-2000-P
FAST TUBE	Sectional, polycarbonate sampling tube, bag of (3) 24″ tubes
TG-2500	Test gas for SL-2000 models
WP-2000	Weatherproof enclosure for SL-2000 models

Makrolon® is a registered trademark of COVESTRO INTELLECTUAL PROPERTY GMBH & CO.

Dwyer

MODEL OSC-200 & OSW-100

OCCUPANCY SENSORS

Wide Viewing Angle, Easy To Install

OSC-200

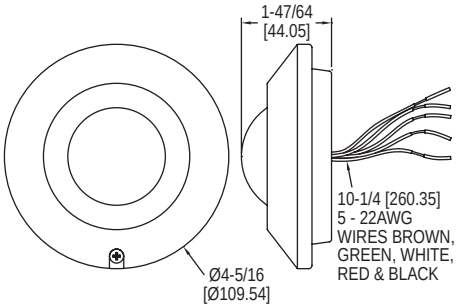

OSW-100

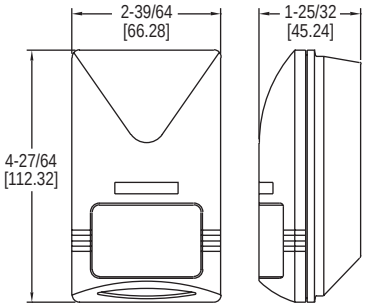

The **Model OSC-200 Occupancy Sensors** help to automate building control systems. A spherical Fresnel lens provides a 360° detection zone with the use of infrared technology.

The **Model OSW-100 Occupancy Sensor** is an infrared sensor designed to help automate building control systems. The Model OSW-100 has a wide 110° viewing angle to capture movement up to 49.2´ (15 m) away.

BENEFITS/FEATURES

- Delay processor suppresses switch activation during momentary occupancy

APPLICATIONS

- Lighting control
- Building energy conservation

MODEL CHART	
Model	**Description**
OSC-200	Omnidirectional occupancy sensor
OSW-100	Wall mount occupancy sensor

SPECIFICATIONS

Infrared Sensor: Dual element.
Range: OSC-200: 34.4´ (10.5 m) diameter at 13.8´ (4.2 m) mount height; OSW-100: 49.2´ (15 m).
Detectable Speed: 0.33 to 9.8 ft/s (0.1 to 3.0 m/s).
Control Output Rating: SPDT, 0.2 A @ 30 VDC.
Ambient Operating Temperature: -4 to 140°F (-20 to 60°C).
Power Consumption: Standby: 5 mA; Operating: 18 mA.
Mounting Height: OSC-200: 7.9 to 13.8´ (2.4 to 4.2 m); OSW-100: 5.9 to 11.8´ (1.8 to 3.6 m).
Power Requirements: 22-26 VAC/DC.
Weight: OSC-200: 2.4 oz (68 g); OSW-100: 3.2 oz (90.7 g).
Agency Approvals: CE.

SELECTION GUIDE
pages 236-241

TYPICAL APPLICATIONS
pages 242-244

TECHNICAL INFORMATION
page 245

Flowmeters, Variable Area & In-Line
pages 246-259, 266

Flowmeters, Dial
page 260

Flowmeters, Venturi
page 261

Flow Sensors, In-Line
pages 262-263

Flowmeters, Orifice Plate
pages 264-265

Sight Flow Indicators
pages 267-269

Flow Switches, Paddle
pages 270-276

Flow Switches, Thermal
page 277

Flow Transmitters, Thermal
page 277

Flow Transmitters, In-Line
page 278

Flow Transmitters, Paddlewheel, Adjustable Insertion
page 279

Flow Transmitters, Paddlewheel, In-Line
pages 280-281

Water Meters
pages 282-285

Flow Transmitters, Ultrasonic
pages 286-287, 289, 294

Flow Transmitters, Ultrasonic, Portable
page 288

Flow Transmitters, Electromagnetic, In-Line
page 290

Flow Transmitters, Electromagnetic, Adjustable Insertion
page 291

Flow Transmitters, Electromagnetic, Thermal Energy Meter
pages 292-293

Flow Transmitters, Electromagnetic, Remote Display
page 293

Mass Flowmeters/ Controllers
pages 295-298

FEATURED PRODUCTS

INSERTION ELECTROMAGNETIC FLOW TRANSMITTER

SERIES IEF | page 291

DEALER DESIGN AWARDS

- Field configurable
- Integral or remote displays allow for ultimate flexibility
- Multiple display configurations with a single unit

INSERTION THERMAL ENERGY METER

SERIES IEFB | pages 292-293

- Field configurable
- Integral or remote display for ultimate flexibility
- Complies with high accuracy requirements of EN 1434-1, ASTM E3137, CSA C900.1-13 for accurate heat measurement

Dwyer

GENERAL PURPOSE PANEL MOUNT
Flowmeters

SERIES	RMA* - page 246-247	RMB* - page 246-247	RMC* - page 246-247	VFA* - page 248	VFB* - page 248	VFC* - page 248
Ranges	0.05 to 200 SCFH air (5 to 2500 cc/m air); 1 to 50 GPH water (5 to 300 cc/m water)	0.5 to 600 SCFH air (0.6 to 95 LPM air); 1 to 100 GPH water (0.06 to 6.2 LPM water)	5 to 1800 SCFH air (2.5 to 850 LPM air); 0.1 to 10 GPM water (0.05 to 5 LPM water)	0.1 to 200 SCFH air (0.06 to 100 LPM air); 0.6 to 40 GPH water (6 to 200 cc/m water)	0.3 to 200 SCFH air (0.2 to 40 LPM air); 0.5 GPH to 5 GPM water (0.002 to 20 LPM water)	2.5 to 100 SCFM air (60 to 2800 LPM air); 0.5 to 20 GPM water (2 to 75 LPM water)
Accuracy	±4% FS	±3% FS	±2% FS	±5% FS	±3% FS	±2% FS
Body Materials	Polycarbonate	Polycarbonate	Polycarbonate	Acrylic	Acrylic	Acrylic
Temperature Limits	130°F (54°C)	130°F (54°C)	130°F (54°C)	With valve: 120°F (48°C); Without valve: 100°F (38.6°C)	With valve: 120°F (48°C); Without valve: 100°F (38°C)	120°F (48°C)
Pressure Limits	100 psi (6.7 bar)	100 psi (6.7 bar)	100 psi (6.7 bar)	With valve: 100 psi (6.7 bar); Without valve: 150 psi (10 bar)	With valve: 100 psi (6.7 bar); Without valve: 150 psi (10 bar)	100 psi (6.7 bar)
Process Connection	1/8″ female NPT back connections	1/4″ female NPT back connections	1/2″ female NPT back connections	1/8″ female NPT back or end connections	1/8″ female NPT back or end connections	1″ female or male NPT or BSPT back or end connections
Scale Length	2″ (51 mm)	5″ (127 mm)	10″ (254 mm)	2″ (51 mm)	4″ (102 mm)	5″ (127 mm)
Metering Valve	Optional bottom or top mount brass or SS valve	Optional bottom brass or SS valve	Optional bottom brass or SS valve	Optional bottom or top mount brass or SS valve	Optional bottom brass or SS valve	N/A

CORROSIVE MEDIA
Flowmeters

SERIES	VAT* - page 254	TVA* - page 254	VA1000* - page 255	VA1500 * - page 255	VAT20000* - page 255	VA25000* - page 255	DR10000* - page 256	DR20000* - page 256
Ranges	1.19 to 79 GPH water (75 to 5000 ml/min water)	6.34 to 79.2 GPH water (400 to 5000 ml/min water)	0.104 to 89.2 SCFH air (49 to 42000 ml/m air) 0.009 to 19.97 GPH water (0.55 to 1260 ml/m water)	0.22 to 49 SCFH air (104 to 23100 ml/min air) 0.028 to 27 GPH water (1.8 to 522 ml/min water)	0.792 to 93.9 SCFH air (374 to 44300 ml/min air) 0.087 to 21.7 GPH water (5.5 to 1370 ml/m water)	0.104 to 18.39 SCFH air (49 to 8600 ml/m air) 0.01 to 3.32 GPH water (0.61 to 209 ml/min water)	0.24 to 100 SCFH air (0.13 to 50 LPM air) 0.02 to 24 GPH water (1.5 to 1500 cc/m water)	0.33 to 90 SCFH air (0.16 to 44 LPM air) 0.05 to 21 GPH water (3.2 to 1300 cc/m water)
Accuracy	±5% FS	±5% FS	±2% FS	±2% FS	±2% FS	±2% FS	±5% FS	±5% FS
Body Materials	PFA	PFA	Glass flow tube	Glass flow tube	Glass flow tube	Glass flow tube	Glass flow tube	Glass flow tube
Temperature Limits	250°F (121°C)	250°F (121°C)	250°F (121°C)	150°F (65°C)	250°F (121°C)	150°F (65°C)	250°F (121°C)	250°F (121°C)
Pressure Limits	100 psi (6.7 bar)	100 psi (6.7 bar)	200 psi (13.8 bar)	100 psi (6.7 bar)	200 psi (13.8 bar)	100 psi (6.7 bar)	250 psi (17 bar)	250 psi (17 bar)
Process Connection	1/4″ or 3/8″ female NPT back connections	1/4″ or 3/8″ female NPT back connections	1/8″ female NPT back connections	1/8″ female NPT back connections	1/8″ female NPT back connections	1/8″ female NPT back connections	1/8″ female NPT back connections	1/8″ female NPT back connections
Scale Length	5″ (127 mm)	3″ (75 mm)	2.5″ (65 mm)	2.5″ (65 mm)	6″ (150 mm)	6″ (150 mm)	2.5″ (65 mm)	6″ (150 mm)
Metering Valve	N/A	Optional 6-turn needle valve	6-turn needle valve; Optional 16-turn high precision valve	6-turn needle valve	6-turn needlevalve; Optional 16-turn high precision valve	6-turn needle valve	Optional 6-turn needle valve	Optional 6-turn needle valve

***CALIBRATION SERVICES AVAILABLE**

These Selection Guides are for quick comparison of similar products. Please refer to the catalog page number referenced for complete product information and specifications.

GENERAL PURPOSE IN-LINE
Flowmeters

SERIES	**LFMA*** - page 253	**LFMB*** - page 253	**LFMC*** - page 253	**LFMD*** - page 253	**LFME*** - page 253	**LFMF*** - page 253
Ranges	0.1 to 5 GPM water (0.5 to 18 LPM water)	0.1 to 5 GPM water (0.5 to 18 LPM water)	0.25 to 8 GPM water (1 to 30 LPM water)	0.8 to 10 GPM water (3 to 40 LPM water)	1.2 to 25 GPM water (5 to 100 LPM water)	2.5 to 70 GPM water (10 to 250 LPM water)
Accuracy	±5% FS	±5% FS	±5% FS	±5% FS	±5% FS	±5% FS
Body Materials	Polycarbonate	Polycarbonate	Polycarbonate	Polycarbonate	Polycarbonate	Polycarbonate
Process Connection	1/2″ male NPT in-line or 90° elbow connections	1/2″ male NPT in-line or 90° elbow connections	1/2″ or 3/4″ male NPT in-line or 1/2″ male NPT 90° elbow connections	3/4″ male or female NPT in-line or 3/4″ male NPT 90° elbow connections	1″ male or female NPT in-line or 1″ male NPT 90° elbow connections	2″ male or female NPT in-line connections
Scale Length	2″ (51 mm)	3″ (76 mm)	3″ (76 mm)	3.5″ (89 mm)	4.5″ (114 mm)	5.5″ (140 mm)

INDUSTRIAL
Flowmeters

SERIES	**IF*** - page 257	**HF** - page 259
Ranges	1.2 to 250 SCFM air (35 to 7080 LPM air); 0.25 to 116 GPM water (0.95 to 439 LPM water)	2 to 22 SCFM air; 0.5 to 25 GPM oil; 0.05 to 116 GPM water
Accuracy	±3% FS	±4% FS
Body Materials	Glass flow tube	Aluminum, brass, or 304 SS
Temperature Limits	200°F (93°C)	240°F or 400°F (115° or 204°C)
Pressure Limits	200 psi (13.8 bar); some models 125 psi (8.6 bar)	600 psi to 6000 psi (41 to 413 bar)
Process Connection	1/2″, 1″ or 2″ female NPT back connections	1/8″ to 2″ female NPT back connections
Scale Length	4-3/4″ (120 mm)	1-1/2″ to 2-1/4″ (38 to 57 mm)

***CALIBRATION SERVICES AVAILABLE**

These Selection Guides are for quick comparison of similar products. Please refer to the catalog page number referenced for complete product information and specifications.

Dwyer

PADDLE AND THERMAL STYLE
Flow Switches

SERIES	V4 - pages 270-271	V6 - pages 272-273	V7 - page 274	V10 - page 274
Service	Gases or liquids	Gases or liquids	Liquids	Gases or liquids
Set Point Range	3 to 2400 GPM (12 to 9000 LPM); 17 to 10000 SCFM (8 to 4700 LPM)	.03 to 10 GPM (.11 to 38 LPM); .15 to 43 SCFM (4 to 1200 LPM)	7.5 to 58.0 GPM (28.4 to 218 LPM)	2.3 to 9.5 GPM (8.7 to 36 LPM); 8.8 to 50 SCFM (250 to 1420 LPM)
Wetted Materials	Brass, 430 SS, 316 SS*	Brass or 303 SS, 301 SS, 302 SS, ceramic*	301 SS	Brass or 303 SS, 316 SS, 301 SS, 302 SS, ceramic
Temperature Limits	-4 to 400°F (-20 to 205°C)	-4 to 400°F (-20 to 205°C)	250°F (121°C)	200°F (93°C)
Pressure Limits	5000 psig (345 bar)	2000 psig (138 bar)	2000 psig (138 bar)	2000 psig (138 bar)
Adjustable Set Point	Yes	Yes	Yes	Yes
Power Requirement	None	None	None	None
Enclosure Rating	WP and EXP	WP and EXP	WP	WP
Switch Type	SPDT or DPDT	SPDT or DPDT	SPDT	SPST
Process Connection	1-1/2″ male NPT* or 1-1/2″ male BSPT	1/2″ male NPT* or 1/2″ male BSPT	1″ male NPT	1/2″ male NPT* or 1/2″ male BSPT
Agency Approvals	ATEX, CE, CSA, FM, IECEx, UL**	ATEX, CE, CSA, IECEx, KTL, UL	CE, UL	CE, CSA, UR

*Other options available, contact factory
**No housing option (-NH) has no approvals

PADDLE WHEEL/TURBINE/MULTI-JET
Flow Transmitters

SERIES	PFT - page 279	SFI-100T - page 281
Service	Liquids	Liquids
Wetted Materials	Brass or 316 SS	Brass
Accuracy	±1% FS	±5% FS
Temperature Limits	212°F (100°C)	-20 to 212°F (-29 to 93°C)
Pressure Limits	400 psig (27.6 bar)	125 psig (8.6 bar)
Pipe Size	1-1/2 to 40″ (38.1 to 1016 mm)	1/2″ or 3/4″ (12.7 mm or 19 mm)
Flow Rate	1.2 to 25 ft/s (0.37 to 7.62 m/s)	2 to 35 GPM (7.6 to 132.5 LPM)
Output	4-20 mA or pulsed	Pulsed

These Selection Guides are for quick comparison of similar products. Please refer to the catalog page number referenced for complete product information and specifications.

PADDLE AND THERMAL STYLE
Flow Switches

SERIES	**V8** - page 275	**FS-2** - page 276	**TDFS2** - page 277
Service	Liquids	Liquids	Liquids
Set Point Range	6.8 to 58 GPM (25.7 to 218 LPM)	4 to 396 GPM (15 to 1500 LPM)	0.5 to 10 ft/s (0.15 to 3 m/s)
Wetted Materials	Brass or 316 SS, 301 SS, 302 SS, ceramic	Tin-Bronze, brass, SS	316 SS
Temperature Limits	-40 to 250°F (-40 to 121°C)	230°F (110°C)	140°F (60°C)
Pressure Limits	250 psig (17.2 bar)	145 psig (10.0 bar)	300 psig (20.67 bar)
Adjustable Set Point	Yes	Yes	Yes
Power Requirement	None	None	9-24 VDC
Enclosure Rating	WP	WP	NEMA 4X (IP65)
Switch Type	SPDT	SPDT	1 NO NPN, 1 NC NPN
Process Connection	1″ male NPT	1″ male NPT or BSPT	1″ male NPT
Agency Approvals	CE, cURus	CE	CE

FLOW
Water Meters

SERIES	**WMH** - page 282	**WMT2** - page 283	**WPT** - page 284
Service	Water	Water	Water
Wetted Materials	Body and couplings: Brass; Measuring chamber: ABS plastic	Body and couplings: Brass; Measuring chamber: ABS plastic	Body: Nylon 66; Couplings: Nylon 66, 1-1/2″ (40 mm) sizes lead free ECO BRASS®; Measuring chamber: ABS plastic
Accuracy	WMH-A-X-XX: Transitional flow: ±3%; Nominal flow: ±1.5%	±2% FS	WPT-A-X-XX: Transitional flow: ±3; Nominal flow: ±1.5%
Temperature Limits	190°F (88°C)	104°F (40°C)	122°F (50°C)
Pressure Limits	150 psi (10 bar)	232 psi (16 bar)	150 psi (10 bar)
Pipe Size	5/8″ x 1/2″ to 2″ (15 mm to 50 mm)	1/2″ to 2″ (12.7 mm to 50 mm)	5/8″ x 1/2″ to 1-1/2″ (15 mm to 40 mm)
Flow Rate	20 to 160 GPM (3 to 30 m^3/h)	20 to 160 GPM (3 to 30 m^3/h)	20 to 160 GPM (3 to 30 m^3/h)
Output	Pulsed	Pulsed	Pulsed

ECO BRASS® is a registered trademark patent by Mitsubishi Shindoh

These Selection Guides are for quick comparison of similar products. Please refer to the catalog page number referenced for complete product information and specifications.

Dwyer

ULTRASONIC
Flow Transmitters

SERIES	**UFM2*** - page 287	**PUB*** - page 288
Service	Liquids	Liquids
Wetted Materials	N/A	N/A
Accuracy	±3% of reading	±2% FS
Temperature Limits	185°F (85°C)	275°F (135°C)
Pipe Size	3/4 to 7″ (25 to 180 mm) model dependant	0.5 to 78″ (13 to 2000 mm)
Flow Rate	0.33 to 32.8 ft/s (0.1 to 10 m/s)	0.33 to 65.62 ft/s (0.1 to 20 m/s)
Output	4-20 mA and pulsed	4-20 mA, 0-16 mA or 0-20 mA and pulsed
Enclosure Rating	NEMA 4X (IP66)	NEMA 4X (IP66)

FLOW
Heat Meters

SERIES	**IEFB*** - pages 292-293	**TUF** - page 294
Services	Compatible clean or dirty non coating, conductive liquids	Clean, compatible liquids
Wetted Materials	316 SS, polystyrene and Silicon	Brass and 316L SS
Range	0 to 20 ft/s (0 to 6 m/s)	Refer to flow rate below
Accuracy	BTU: RTD and calculator meet EN1434 Class B; Flow: 1% of reading or 1% FS (model dependant)	BTU: EN1434/CJ128 CLASS 2; Flow: ±(2+(0.02 Qp/Q))
Temperature Limits	32 to 250°F (0 to 121°C)	36 to 203°F (2 to 95°C)
Pressure Limits	400 psi (27.6 bar)	362 psi (25 bar) (model dependant)
Pipe Size	4 to 36″ (101 to 914 mm) (model dependant)	1/2 to 8″ (15 to 200 mm)
Flow Rate	Refer to velocity range above	0.1 to 881 GPM (0.5 to 3333 LPM)
Output	(1) Analog (1) Pulse/frequency (1) Empty Pipe detection/ min. or max velocity trigger (1) Reverse flow pulse output indication (1) BACnet or Modbus®	BACnet, Modbus® or M-BUS (model selectable)

Modbus® is a registered trademark of Schneider Automation, Inc.

***CALIBRATION SERVICES AVAILABLE**

These Selection Guides are for quick comparison of similar products. Please refer to the catalog page number referenced for complete product information and specifications.

ELECTROMAGNETIC, IN-LINE/INSERTION
Flow Transmitters

SERIES	UFB* - page 286	MFS - page 290	IEF* - page 291
Service	Liquids	Liquids	Liquids
Wetted Materials	N/A	316 SS	316 SS
Accuracy	±2% of reading	±2% of reading	0.5% of reading, 1% of reading or ±1% FS
Temperature Limits	275°F (136°C)	194°F (90°C)	15 to 250°F (-9 to 121°C)
Pressure Limits	N/A	232 psi (16 bar)	400 psi (27.6 bar)
Pipe Size	0.05 to 79″ (13 to 2000 mm)	1/2 or 1″ (12.7 or 25 mm)	4 to 36″ (101 to 914 mm)
Flow Rate	0.33 to 33 ft/s (0.1 to 10 m/s)	0.25 to 52.8 GPM (1 to 200 LPM)	0 to 20 ft/s (0 to 6 m/s)
Output	4-20 mA, 0-16 mA or 0-20 mA	4-20 mA or pulsed	(1) Analog: 4-20 mA, 0-5 V, 0-10 V or 2-10 V (display selectable); (1) Pulse/Frequency: 0-15 V peak pulse, 0-500 Hz or scalable pulse output (display selectable); (2) Alarm: (1) Empty pipe detection or minimum/ maximum velocity, (display selectable); (1) Reverse flow output indication

***CALIBRATION SERVICES AVAILABLE**

These Selection Guides are for quick comparison of similar products. Please refer to the catalog page number referenced for complete product information and specifications.

Designers of a bio-medical incubator rely on a Dwyer® flowmeter to control CO_2 flow

This low temperature incubator with CO_2 atmosphere is used in bio-medical applications, such as short term blood work and long term tissue culture studies. CO_2 is introduced at a high initial purge rate controlled by a timer. After the purge period, a Dwyer® Visi-Float® flowmeter with a metering valve is utilized to adjust and monitor the CO_2 flow in cubic centimeters per minute. The Visi-Float® flowmeter provides the reliability and accuracy needed to complement the host of high performance features designed into this incubator.

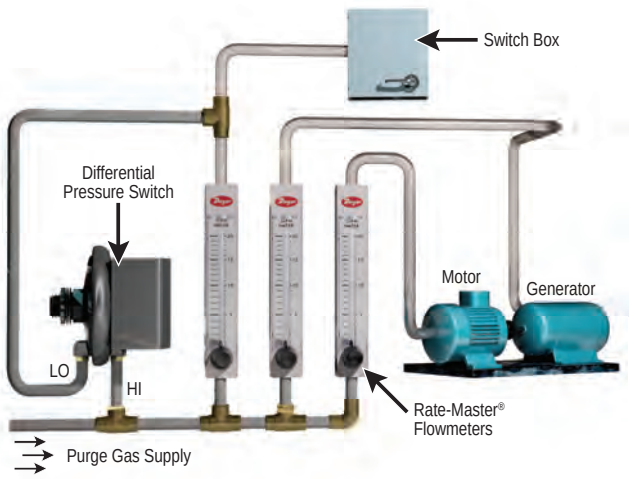

Flowmeters and/or differential pressure switches monitor vital purge gas flow to motors, switchgear, instruments

To purge motors, generators, switchgear, and industrial instrument cases, Dwyer® flowmeters are installed in the supply line to indicate a flow of air, manufactured inert gas, or nitrogen to these devices. The flowmeters (with valves) allow maintenance personnel to set the flow quickly and recheck anytime to make sure proper flow continues. A Dwyer® differential pressure switch can also be used to monitor proper flow on a continuous basis and provide a signal or alarm if purge gas flow fails. Such an optional switch is shown above, monitoring proper flow of purge gas to the switchbox as a function of pressure drop across the flowmeter. The purging of electrical equipment in hazardous areas may require more extensive control and monitoring devices.

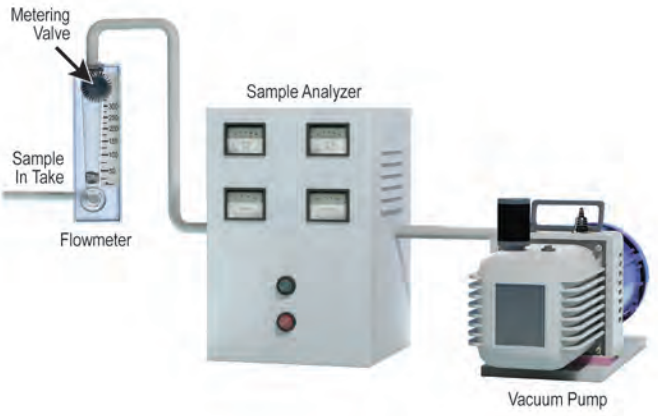

Metering valves on Dwyer® flowmeters control air/gas intake on permanent air pollution analyzers

Regulations regarding air pollution levels require continuous monitoring a source and ambient pollutants in areas where noxious gases are generated. Ambient air quality samplers utilize either Visi-Float® or Rate-Master® flowmeters to establish the proper flow of sample or carrier gases into the analyzer. Top mounted metering valves are recommended for flowmeters used in vacuum service to maintain specified accuracy.

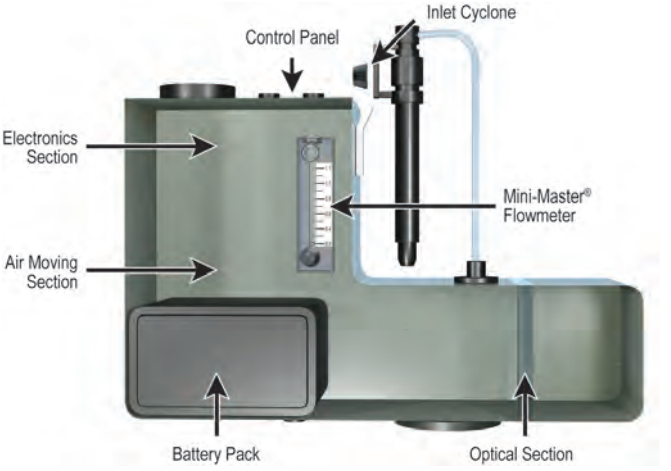

Operator uses Mini-Master® flowmeter to verify air flow into portable dust monitor

The small size, accuracy, and low cost of the Dwyer® Mini-Master® flowmeter lends itself perfectly to use in this portable, battery-operated dust monitor. Using a light scattering electronic sampler, a small vacuum pump draws air through the flowmeter into the sampling chamber, and the flowmeter verifies the proper volume of sample air flow. Readout is digital and directly in dust weight per cubic meter of air.

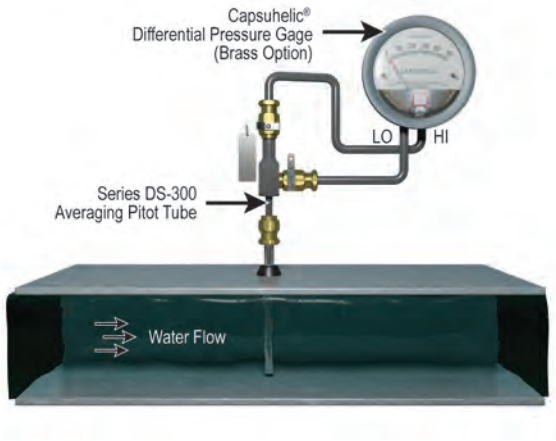

Brass body gage measures water flow rates

A Dwyer® brass body Capsuhelic® differential pressure gage, required for water service to prevent corrosion damage to the gage, is used in conjunction with a Dwyer® Series DS-300 averaging Pitot tube. The Capsuhelic® gage provides a basic method of measuring water flow rates. As a guide in selecting the appropriate Capsuhelic® gage range, the designer can consult data provided with the DS-300 averaging Pitot tube. This relates differential pressure in inches of water column to the water flow in gallons per minute for the pipe size involved. The gage can be calibrated directly in GPM if desired. Bleed fittings installed in the top ports of the gage are recommended to facilitate removal of air from the system.

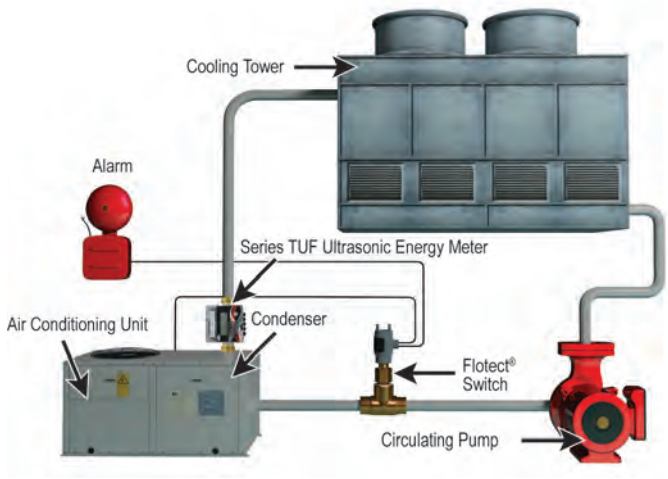

Flotect® flow switch ensures cooling water circulation before air conditioning compressor motor starts and Series TUF monitors thermal energy loss from cooling tower to air condenser

Large air conditioning and refrigeration systems which include water cooled condensers require that the water must circulate through the condenser and cooling tower in sufficient volume before the compressor is started. Here the W.E. Anderson™ Flotect® flow switch is connected to the compressor control circuit to prevent starting or to shut down the compressor control circuit if the flow of cooling water falls below that required for proper operation. A dual Flotect® switch (available as an option) will also trigger a remote alarm to signal the operator of the shutdown as soon as it occurs. The Series TUF monitors the water flow as well as the temperature of the water going into and out of the air conditioning unit in order to calculate the cooling efficiency of the air conditioning unit.

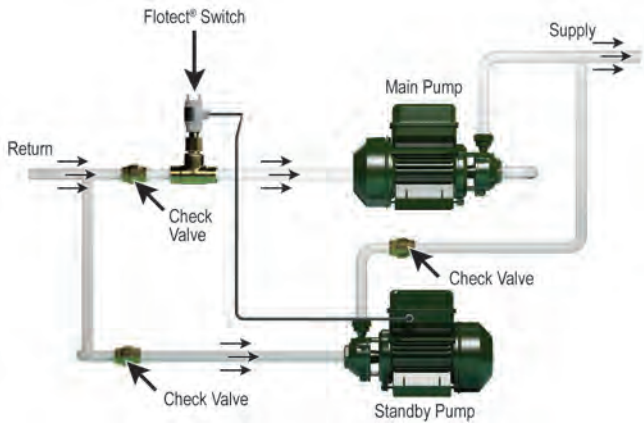

When main pump fails, Flotect® flow switch transfers to standby pump to maintain vital fluid circulation

When proper fluid circulation in a system is critical, the W.E. Anderson™ Flotect® flow switch will automatically start a standby pump should the main pump fail. The flow in the main path of the parallel system illustrated keeps the Flotect® flow switch in an open position. When the main pump fails, the flow will cease. The flow switch then closes, starting the standby pump.

W.E. Anderson® Midwest Sight Flow Indicator reveals flow or stoppage

In this gravity feed system delivering liquid fertilizer to portable tanks, a Series SFI-100 MIDWEST sight flow indicator was installed. The operator can see the rotating vanes to check for adequate flow at any time.

Flows of air and gases used in a special furnace are controlled by Dwyer® flowmeters

A total of eleven Dwyer® Rate-Master® flowmeters function in the design of this sophisticated conveyor belt furnace used in manufacturing electronic devices. The flowmeters provide precise adjustment and monitoring of the flows of air and gases into the various portions of the furnace, which allow it to perform different operations, such as decarburizing and oxidizing, metallic package sealing, glass package sealing, and glass-to-metal sealing.

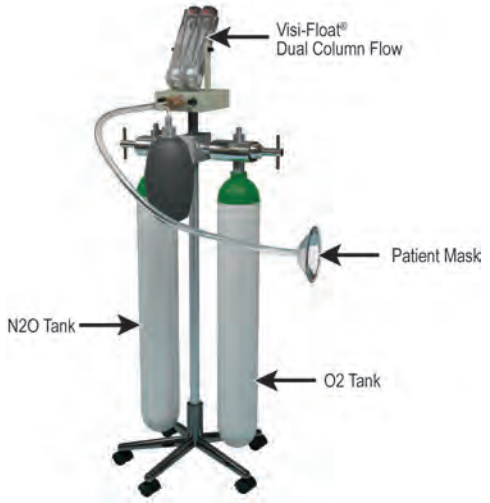

Durable dual-column flowmeter adds value for physicians and oral surgeons

Physicians and oral surgeons who use anesthesia or analgesia in their offices on an occasional basis require a system that is reliable but small and portable. One such system employs special Dwyer® dual-column Visi-Float® flowmeters to meter and monitor precise flows of nitrous oxide and oxygen to the patient. In addition to meeting the performance level demanded by this application, the Visi-Float® flowmeters are durable and attractive complements to this important and visible medical device.

Salt corrosion test cabinet includes a Dwyer® flowmeter for adjustment of bubbler air flow

Prior to atomizing a heated salt solution to produce a fog inside this corrosion test cabinet, compressed air is bubbled through a heated water column to properly heat and humidify the air. A Dwyer® Visi-Float® VFA flowmeter, as part of the system, provides precise adjustment of the bubbler air flow to meet test standards.

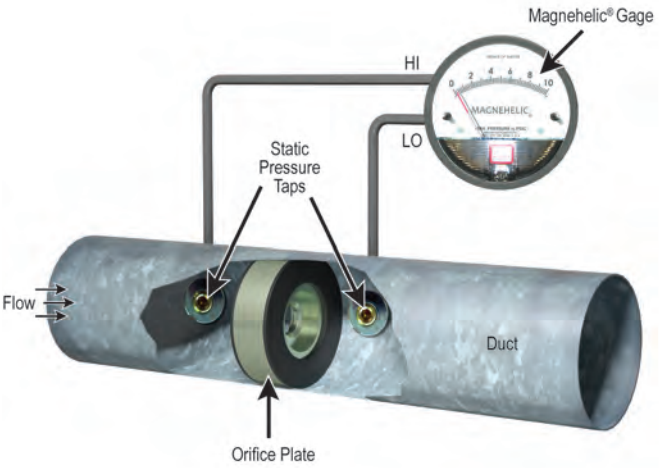

Measuring air velocity with an orifice plate

In this set-up, the Magnehelic® gage measures higher air velocities as a function of the pressure drop across a sharp-edged orifice plate in the pipe. The pressure drops can be converted to air velocity using orifice plate data supplied by the manufacturer. Details regarding available sizes, ranges, installation, and limitations are available from orifice plate manufacturers and from standard handbooks. A Dwyer® Durablock® inclined manometer or Photohelic® differential pressure switch/gage can also be used. In addition to the visual reading gage, the Photohelic® switch/gage provides an alarm signal or shutdown control function. Pressure sensing taps should be located on the side or top of the pipe or duct to prevent condensation from draining into sensing lines or gages.

CONVERSION CURVES FOR GASES

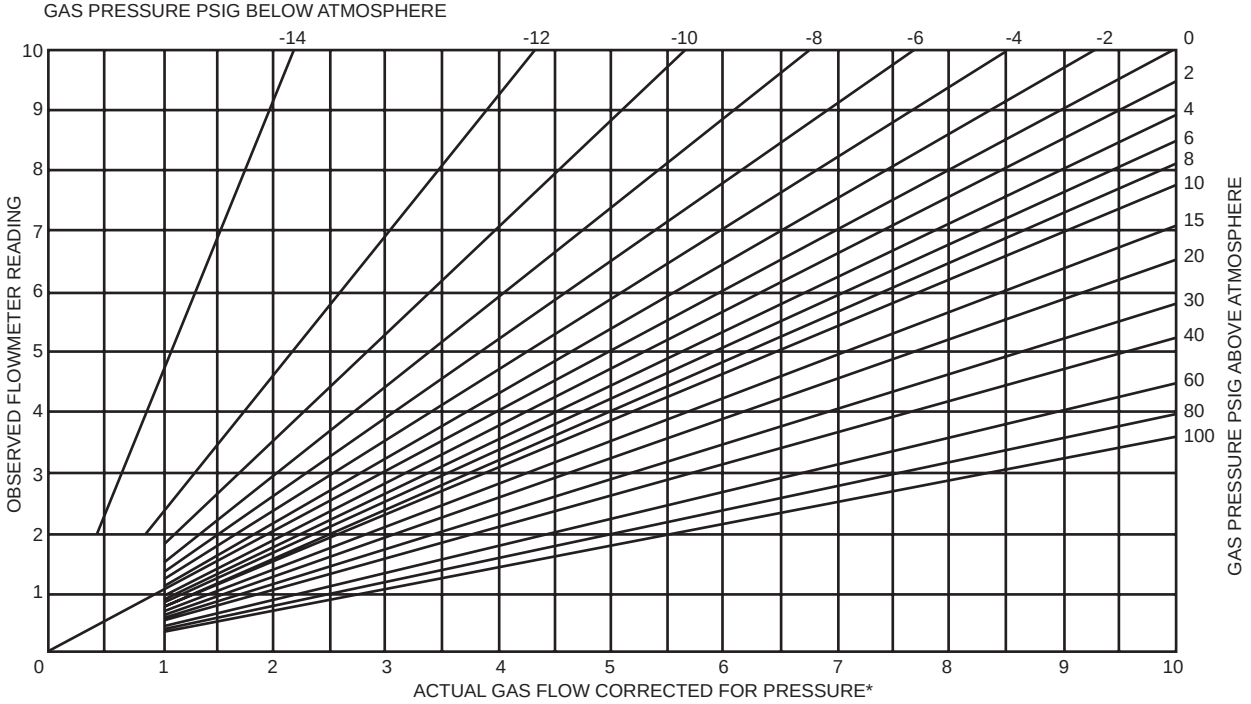

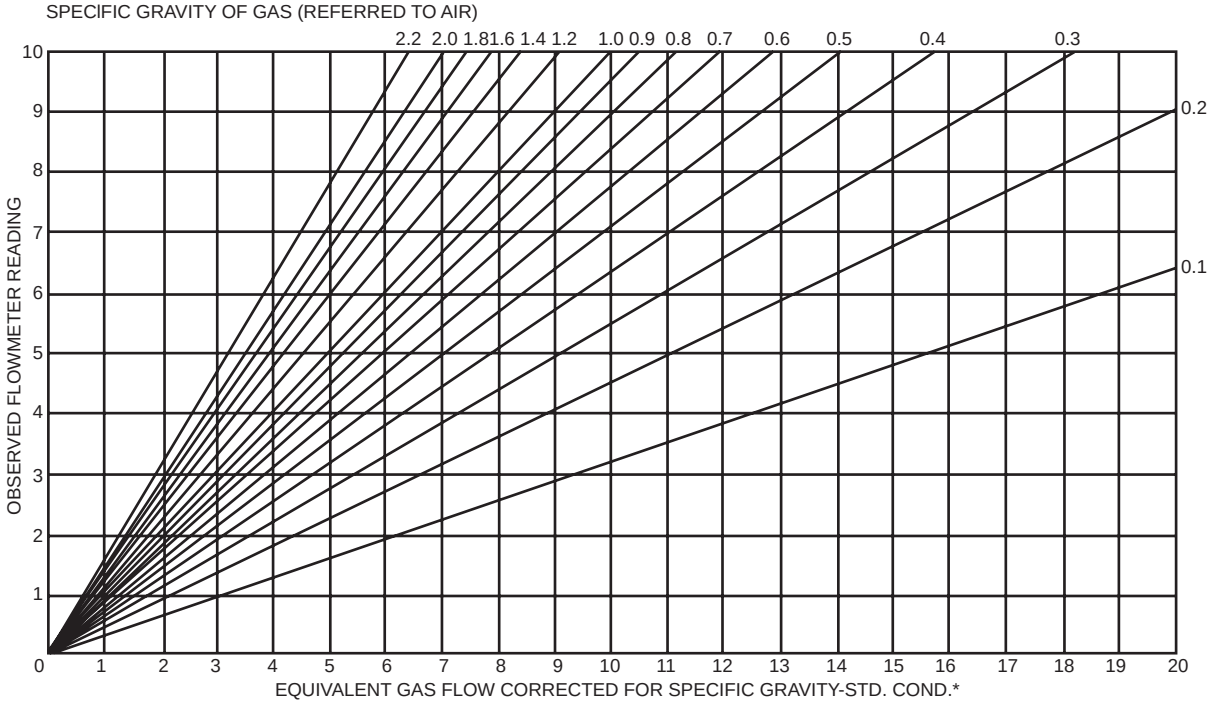

If more convenient, approximate correction factors may be determined using the following formulas:

A. Pressure: $Q_2 = Q_1 \times \sqrt{\frac{P_1 \times T_2}{P_2 \times T_1}}$

Where:
- Q_1 = Actual or observed flowmeter reading
- Q_2 = Standard flow corrected for pressure and temperature
- P_1 = Actual pressure (14.7 psia + gage pressure)
- P_2 = Standard pressure (14.7 psia, which is 0 psig)
- T_1 = Actual temperature (460 R + temp °F)
- T_2 = Standard temperature (530 R, which is 70°F)

B. Specific Gravity: $Q_2 = Q_1 \times \sqrt{\frac{1}{S.G.}}$

Where:
- Q_1 = Observed flowmeter reading
- Q_2 = Standard flow corrected for specific gravity
- 1 = Specific gravity of air or water
- S.G. = Specific gravity of media being used in flowmeter originally calibrated for air or water.

Note: The corrections shown in the curves and in the formulas are for variations in specific gravity and internal pressure* only. Further correction may be necessary for variations in viscosity and changes in type of flow from laminar to turbulent or vice versa. This is particularly true in the case of extremely low flows of the lighter gases. Nevertheless these charts and correction factors can be quite useful when dealing with small changes in pressure* and specific gravity.

*Measured at discharge on all but TMV units. Inlet pressure on TMV models.

Dwyer

SERIES RM

RATE-MASTER® POLYCARBONATE FLOWMETERS

2″, 5″ or 10″ Scale, Interchangeable Bodies

CALIBRATION SERVICES AVAILABLE

Model RMC
10″ scale, 15-3/8″ high

Model RMB-SSV
5″ scale, 8-3/4″ high

Model RMA-TMV
2″ scale, 4-13/16″ high

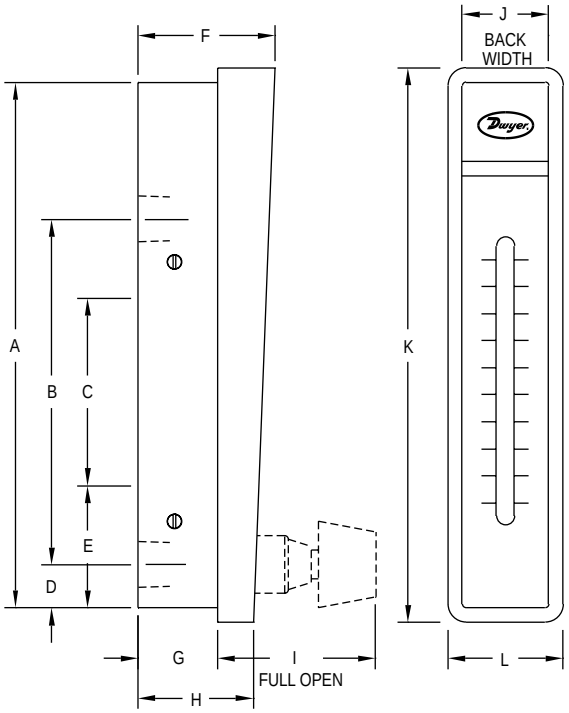

DIMENSIONS - FLOWMETER			
	Model RMA	**Model RMB**	**Model RMC**
A	4-9/16 [115.90]	8-1/2 [215.90]	15-1/8 [384.20]
B	3 [76.20]	6-7/16 [163.50]	12-1/4 [311.20]
	1/8 NPT conn.	1/4 NPT conn.	1/2 NPT conn.
C	1-5/8 [41.28]	3-15/16 [100.00]	8-3/4 [222.30]
	10-32 mtg. holes	1/4-20 mtg. holes	3/8-24 mtg. holes
D	3/8 [9.525]	5/8 [15.88]	1 [25.40]
E	1-1/16 [26.99]	1-7/8 [47.63]	2-3/4 [69.85]
F	1-3/16 [30.16]	1-3/4 [44.45]	2-1/2 [63.50]
G	11/16 [17.46]	1 [25.40]	1-7/16 [36.51]
H	61/64 [24.21]	1-7/16 [36.51]	1-31/32 [50.00]
I	1-3/8 [34.92]	1-13/16 [46.04]	2-1/2 [63.50]
J	3/4 [19.05)	1-1/4 [31.75]	2 [50.80]
K	4-13/16 [122.20]	8-3/4 [222.30]	15-3/8 [390.50]
L	1 [25.40]	1-1/2 [38.10]	2-1/4 [57.15]

VIDEO ONLINE

The **Series RM Rate-Master® Polycarbonate Flowmeters** are a line of general use, direct reading precision flowmeters suitable for both gas and liquid applications. This Series consists of 2″ (51 mm), 5″ (127 mm) and 10″ (254 mm) scales that can be panel or surface mounted with optional precision metering valves. Within a given Series, the Rate-Master® flowmeter bodies can be instantly interchanged, allowing the piping to remain undisturbed, interchangeability of the ranges, and easy cleaning.

BENEFITS/FEATURES

- Eliminate the need for troublesome conversions with direct reading scales
- Reduce installation damage and cost due to stainless steel backbone that absorbs piping torque
- Long operation life with durable, shatter-proof polycarbonate body
- High repeatability enabled by precision injection molding around a precision tapered pin
- Increased reading accuracy with special integral flow guides that stabilize float movement
- Save time with instantaneous flow reading from scale graduations on both sides of the indicating tube

APPLICATIONS

- Medical equipment
- Air samplers
- Gas analyzers
- Pollution monitors
- Chemical injectors
- Cabinet purging

SPECIFICATIONS

Service: Compatible gases and liquids.
Wetted Materials: Body: Polycarbonate; O-ring: Neoprene and Buna-N; Metal parts: SS; Float: SS, black glass, aluminum, K monel, tungsten carbide depending on range.
Temperature Limit: 130°F (54°C).
Pressure Limit: 100 psi (6.9 bar).
Accuracy: RMA: 4%; RMB: 3%; RMC: 2% of FS.
Process Connection: RMA: 1/8″; RMB: 1/4″; RMC: 1/2″ female NPT.
Weight: RMA: 4 oz (113.4 g); RMB: 13 oz (368.5 g); RMC: 39 oz (1105.6 g).
Compliance: Meets the technical requirements of EU Directive 2011/65/EU (RoHS II).

CAUTION: Dwyer® Rate-Master® flowmeters are designed to provide satisfactory long term service when used with air, water, or other compatible media. Refer to factory for information on questionable gases or liquids. Caustic solutions, anti-freeze (ethylene glycol) and aromatic solvents should definitely not be used.

USA: California Proposition 65
⚠**WARNING:** This product can expose you to chemicals including Lead, which is known to the State of California to cause cancer and birth defects or other reproductive harm. For more information go to www.P65Warnings.ca.gov.

RATE-MASTER® POLYCARBONATE FLOWMETERS

Gas Flow from 0.05 to 1800 SCFH, Water Flow to 10 GPM

CALIBRATION SERVICES AVAILABLE

RANGE CHART - RMA 2˝ SCALE - POPULAR RANGES			
Range No.	**SCFH Air**	**Range No.**	**LPM Air**
1**	.05 to .4	26	.5 to 5
2	.1 to 1	21	1 to 10
3	.2 to 2	22	2 to 25
4	.5 to 5	23	5 to 50
5	1 to 10	24	5 to 70
6	2 to 20	25	10 to 100
7	5 to 50	**Range No.**	**CC/Min. Water**
8	10 to 100	32	5 to 50
9	15 to 150	33	10 to 110
10	20 to 200	34	20 to 300
Range No.	**CC/Min. Air**	**Range No.**	**GPH Water**
151*	5 to 50	42	1 to 11
150*	10 to 100	43	2 to 24
11	30 to 200	44	4 to 34
12	50 to 500	45	5 to 50
13	100 to 1000		
14	200 to 2500		

*Accuracy ±8%, NIST not available.
**NIST not available.

RANGE CHART - RMB 5˝ SCALE - POPULAR RANGES			
Range No.	**SCFH Air**	**Range No.**	**SCFH and LPM Air**
49***	0.5 to 5	50D	1.2 to 10/0.6 to 5
50	1 to 10	51D	2 to 20/1 to 9.5
51	3 to 20	52D	4 to 50/2 to 23
52	4 to 50	53D	10 to 100/5 to 50
53	10 to 100	54D	20 to 200/10 to 95
54	20 to 200	**Range No.**	**GPH and LPM Water**
55	40 to 400	82D	1 to 12/0.06 to 0.76
56	50 to 500	83D	1 to 20/0.065 to 1.25
57	60 to 600	85D	10 to 100/0.8 to 6.2
Range No.	**GPH Water**		
82	1 to 12		
83	1 to 20		
84	4 to 40		
85	10 to 100		

***Accuracy ±5%.

RANGE CHART - RMC 10˝ SCALE - POPULAR RANGES			
Range No.	**SCFH Air**	**Range No.**	**GPH Water**
101	5 to 50	134	2 to 20
102	10 to 100	135	8 to 90
103	20 to 200	**Range No.**	**GPM Water**
104	40 to 400	141	.1 to 1
105	60 to 600	142	.2 to 2.2
106	100 to 1000	143	.4 to 4
107	120 to 1200	144	.8 to 7
108	200 to 1800	145	1.2 to 10
Range No.	**SCFM Air**		
121	1 to 10		
122	2 to 20		
123	4 to 30		

MODEL CHART	
Model	**Description**
RMA-X	Standard RMA
RMA-X-SSV†	RMA with stainless steel valve
RMA-X-TMV*†	RMA with top mounted valve
RMB-X	Standard RMB
RMB-X-SSV†	RMB with stainless steel valve
RMC-X	Standard RMC
RMC-X-SSV†	RMC with stainless steel valve
How To Order: Series-Range No.("X")-Valve-Option **Example:** RMA-2-SSV (Series RMA with .1-1 SCFH air range and stainless steel valve)	
*Provide same precision construction but for vacuum applications. †Valve is designed for flow adjustment only, not intended to be used as an open/shut-off valve.	

OPTIONS	
To order add suffix:	**Description**
-APF	Adjustable pointer flag for Series RMA
-BPF	Adjustable pointer flag for Series RMB
-CPF	Adjustable pointer flag for Series RMC
-NIST	NIST traceable calibration certificate
Note: Special ranges, scales, mounting arrangements, etc., are available on special order, or in OEM quantities.	

Adjustable pointer flags
Red lined pointer flags provide quick visual reference to a required flow level. Of clear plastic, they snap into place inside bezel and slide to desired level.

ACCESSORIES	
Model	**Description**
RK-RMB	Regulator kit for Series RMB
RKA	Regulator kit for Series RMA

Regulator kits
Available as optional extras for both Rate-Master® flowmeters and Visi-Float® flowmeters models. This view shows Model VFA Visi-Float® flowmeter with integrally connected constant differential pressure regulator. Recommended for use where inlet air pressure fluctuates widely and constant flow is required. The regulator maintains a constant pressure differential of approximately 3 ±.15 psig. Supply pressure must be at least 3 psig above the flowmeter discharge to operate. The standard regulator may be used with any Dwyer® Series RM or VF flowmeter up to 200 SCFH. For higher flow rates consult the factory.

USA: California Proposition 65
⚠ **WARNING:** This product can expose you to chemicals including Lead, which is known to the State of California to cause cancer and birth defects or other reproductive harm. For more information go to www.P65Warnings.ca.gov.

Dwyer

SERIES VF

VISI-FLOAT® ACRYLIC FLOWMETERS

Hot-Stamped Scales, Multi-Angle Views of Flow

CALIBRATION SERVICES AVAILABLE

Model VFB

Model VFA-SSV

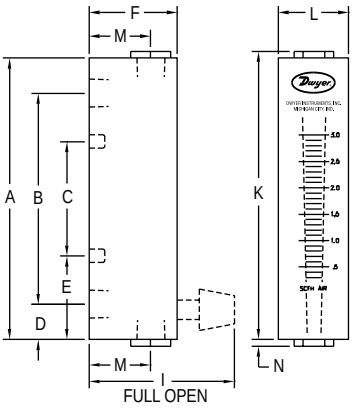

DIMENSIONS - FLOWMETER		
	Model VFA	**Model VFB**
A	4 [101.6]	6-1/2 [165.1]
B	3 [76.20]; 1/8 NPT conn.	5-1/2 [139.7]; 1/8 NPT conn.
C	1-5/8 [41.28]; 10-32 thd	3-1/2 [88.90]; 10-32 thd
D	1/2 [12.70]	1/2 [12.70]
E	1-3/16 [30.16]	1-1/2 [38.10]
F	1-1/4 [31.75]	1-1/4 [31.75]
I	2-1/16 [52.39]; Open	2-1/16 [52.39] ; Open
K	4-3/32 [104.0]	6-11/16 [169.9]
L	1 [25.40]	1-3/8 [34.93]
M	7/8 [22.23] ; 1/8 NPT	7/8 [22.23]; 1/8 NPT
N	3/32 [2.381]	3/32 [2.381]

The **Series VF Visi-Float® Acrylic Flowmeters** are a line of direct reading, precision machined, clear acrylic body flowmeters suitable for both gas and liquid applications. The fabrication of the Visi-Float® flowmeters is backed by over 60 years of experience in acrylic instrument machining. This Series consists of 2″ (51 mm) and 4″ (102 mm) scales with optional precision metering valves.

BENEFITS/FEATURES
- Appealing design allows for complete visual inspection with bodies that are cut and precision machined from solid, clear acrylic blocks
- Increased reading accuracy with clear visibility of the float on a smooth white background
- Eliminates the need for troublesome conversions and increases product operating life with direct reading scales that are hot stamped into the plastic
- High repeatability from precision machined tapered bores
- Low installation costs with back or end connection options with metal mounting inserts that can be supported directly by system piping

APPLICATIONS
- Medical equipment
- Laboratory equipment
- Air samplers
- Gas analyzers
- Pollution monitors
- Chemical injectors
- Cabinet purging

MODEL CHART	
Model	**Description**
VFA-X	Standard VFA
VFA-X-SS	VFA with stainless metal wetted parts
VFA-X-BV* **	VFA with brass valve
VFA-X-SSV* **	VFA with stainless steel valve
VFA-X-EC	VFA with end connections
VFA-X-EC-SS	VFA with end connections and stainless steel metal wetted parts
VFB-X	Standard VFB
VFB-X-SS	VFB with stainless metal wetted parts
VFB-X-BV* **	VFB with brass valve
VFB-X-SSV* **	VFB with stainless steel valve
VFB-X-EC	VFB with end connections
VFB-X-EC-SS	VFB with end connections and stainless steel metal wetted parts
How To Order: Series—Range No. (“X”)—Valve—Option **Example:** VFA-9-BV (Series VFA with 20-200 SCFH air range and brass valve)	
***Valve is designed for flow adjustment only, not intended to be used as an open/shut-off valve.	

OPTIONS	
To order add suffix:	**Description**
-NIST	NIST traceable calibration certificate
-PF	Red ABS plastic pointer flag
-VIT	Fluoroelastomer O-rings

ACCESSORIES	
Model	**Description**
RK-VFB	Regulator kit for Series VFB
RKA	Regulator kit for Series VFA

OEM SPECIALS
Special flowmeter designs can be supplied to meet a wide range of requirements and specific applications. These include: on-off plunger and push-to-test valves, special gas or fluid calibration, special ranges, scales, name brand or other identification. Pointer flags can be furnished for instant visual reference. For specific information, please supply an outline of your requirements.

SPECIFICATIONS	
Service: Compatible gases and liquids. **Wetted Materials:** Body: Acrylic plastic; O-ring: Buna-N (fluoroelastomer available); Metal parts: Nickel plated brass standard, SS optional; Float: SS, black glass, aluminum, K monel depending on range. **Temperature and Pressure Limits:** Without valve: 100 psig (6.9 bar) @ 150°F (65°C); 150 psig (10 bar) @ 100°F (38°C); With valve: 100 psig (6.9 bar) @ 120°F (48°C). **Accuracy:** VFA = 5% of FS; VFB = 3% of FS.	**Process Connection:** 1/8″ female NPT. VFB ranges 85 and 86 have 1/4″ NPT back connections or 3/8″ NPT end connections. These ranges not available with brass valves. **Scale Length:** VFA 2″ typical length; VFB 4″ typical length. **Mounting Orientation:** Mount in vertical position. **Weight:** VFA: 4.0 to 4.8 oz (.11 to .14 kg); VFB: 7.2 to 8.8 oz (.20 to .25 kg). **Compliance:** Meets the technical requirements of EU Directive 2011/65/EU (RoHS II).

RANGE CHART - VFA 2″ SCALE - POPULAR RANGES			
Range No.	**SCFH Air**	**Range No.**	**LPM Air**
1**	.1 to 1	21**	.06 to 0.5
2	.2 to 2	22	.15 to 1
3	.6 to 5	23	.6 to 5
4	1 to 10	24	1 to 10
5	2 to 20	25	3 to 25
6	4 to 30	26	6 to 50
7	5 to 50	27	10 to 100
8	10 to 100		
9	20 to 200		
Range No.	**CC/Min. Water**	**Range No.**	**GPH Water**
32	6 to 50	41	.6 to 5
33	10 to 100	42	2 to 10
34	20 to 200	43	3 to 20
		44	8 to 40
**NIST not available.			

RANGE CHART - VFB 4″ SCALE - POPULAR RANGES			
Range No.	**SCFH Air**	**Range No.**	**LPM Air**
50	.3 to 3	65	.2 to 4
91*	1 to 10	66	1 to 10
51*	2 to 20	67	1 to 20
52	4 to 40	68	3 to 30
53*	10 to 100	69	4 to 40
54*	10 to 150	**Range No.**	**CC/Min. Water**
55*	20 to 200	82	2 to 30
Range No.	**SCFM Air**	**Range No.**	**GPH Water**
90	.3 to 3	80*	.5 to 12
Range No.	**CC/Min. Air**	83*	1 to 20
60**	100 to 1000	84	6 to 40
		81	6 to 60
		Range No.	**GPM Water**
		85	.2 to 2
		86	.6 to 5
*For dual range models in English and Metric add “D” to end of Range No. **NIST not available.			

Special multi-column Visi-Float® flowmeters
Perfect for OEM applications, Visi-Float® flowmeters can be custom made with up to 10 columns in a single block of acrylic plastic.
Available with or without valves. Consult factory for more information.

USA: California Proposition 65
⚠**WARNING:** This product can expose you to chemicals including Lead, which is known to the State of California to cause cancer and birth defects or other reproductive harm. For more information go to www.P65Warnings.ca.gov.

Dwyer

SERIES VFC & VFCII

VISI-FLOAT® ACRYLIC FLOWMETERS

5″ Scale, In-Line or Back Connection Options

CALIBRATION SERVICES AVAILABLE

VFCII with 1″ MNPT end connections

VFC with 1″ FNPT end connections

VFC with 1″ FNPT back connections

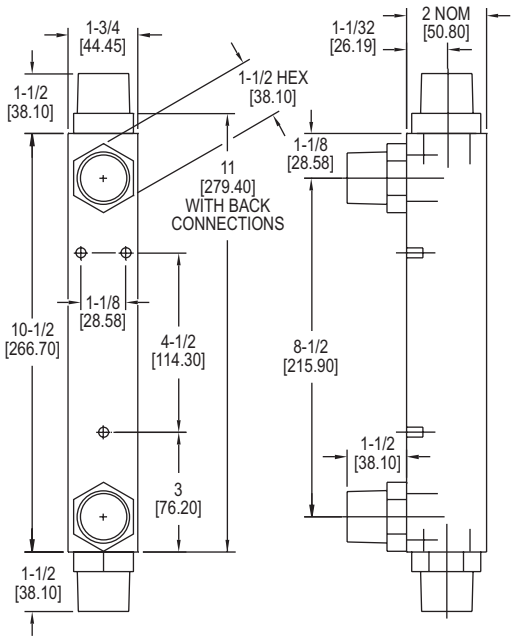

The **Series VFC Visi-Float® Acrylic Flowmeters** are direct reading, precision machined, clear acrylic body flowmeters suitable for both gas and liquid applications. This Series consists of two 5″ (127 mm) scale flowmeters, the VFC and VFC II. The VFC features PVC 1″ female NPT connections and the VFC II units are equipped with acetal thermoplastic 1″ male NPT fittings.

BENEFITS/FEATURES

- Bodies are cut and precision machined from solid, clear acrylic blocks allowing for complete visual inspection
- White background allows for better visibility of the float increasing reading accuracy
- Direct reading scales are hot stamped into the plastic eliminating the need for troublesome conversions and increasing product operating life
- Precision machined tapered bore enables high repeatability
- Low installation costs with back or end connection options

APPLICATIONS

- Medical equipment
- Laboratory equipment
- Air samplers
- Gas analyzers
- Pollution monitors
- Chemical injectors
- Cabinet purging
- Remediation
- Osmosis skids

RANGE CHART - 5″ SCALE - POPULAR RANGES			
Range No.	**SCFM Air**	**Range No.**	**GPM Water**
121	4 to 25	141	.5 to 5
122	5 to 50	142	1 to 10
123	10 to 100	143	2 to 20
Range No.	**LPM Air**	**Range No.**	**LPM Water**
131	100 to 700	151	2 to 20
132	200 to 1400	152	4 to 40
133	300 to 2800	153	10 to 75

SPECIFICATIONS

Service: Compatible gases and liquids.
Wetted Materials: Body: Acrylic plastic; O-ring: Buna-N (fluoroelastomer available); Metal parts: SS; Float: SS; Fittings: VFC: PVC; VFCII: Acetal thermoplastic.
Temperature and Pressure Limits: 100 psig (6.9 bar) @ 120°F (48°C).
Accuracy: 2% of FS.
Process Connection: VFC: 1″ female NPT back connections. End connections optional; VFCII: 1″ male NPT back connections. End connections optional.
Scale Length: 5″ typical length.
Mounting Orientation: Mount in vertical position.
Weight: 24 to 25 oz (.68 to .71 kg).
Agency Approvals: Meets the technical requirements of EU Directive 2011/65/EU (RoHS II).

MODEL CHART

Model	Thread Type	Process Connection
VFC-X	1″ FNPT	Back
VFCII-X	1″ MNPT	Back
VFC-X-EC	1″ FNPT	In-line end
VFCII-X-EC	1″ MNPT	In-line end

How To Order: Series-Range No.-Option
Example: VFC-123-EC
(Series VFC with 10-100 SCFM air range and 1″ female NPT end connections)

OPTIONS

To order add suffix:	Description
-BSPT	BSPT process connections
-FDA	316 SS float and guide rod (only available on VFCII with fluoroelastomer O-rings)
-NIST	NIST traceable calibration certificate
-VIT	Fluoroelastomer O-rings

Dwyer

SERIES MM

MINI-MASTER® FLOWMETERS

2″ or 1-1/2″ Scale, Configurable Valve Option

CALIBRATION SERVICES AVAILABLE

Standard model MMA-X-LV

Standard model MMA-X with field configurable valve, bottom mount

Standard model MMA-X with field configurable valve, top mount

Model MMF-50-PV 1-1/2″ scale, with metering valve, knob

Model MMF-10 with 1-1/2″ scale, no valve

Model MMF-10-TMV with top-mounted valve- for vacuum service. Use screwdriver to adjust

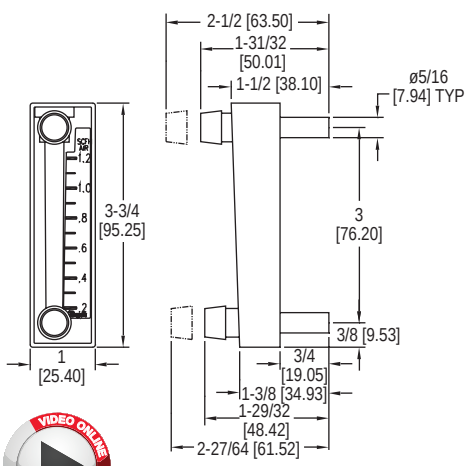

MMA-X

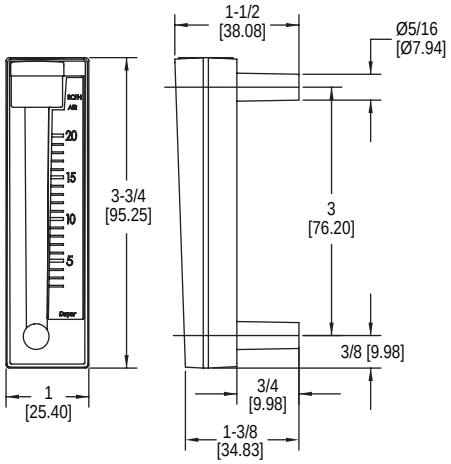

MMA-X-LV

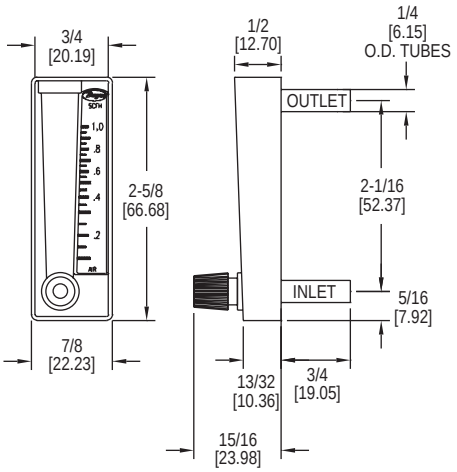

MMF-X

The **Series MM Mini-Master® Flowmeters** consists of two series of flowmeters suitable for both gas and liquid applications with advanced features at a low cost.
The Series MMA is a 2″ (51 mm) scale flowmeter that is user configurable with or without non-removable top or bottom front mounted metering valves. It is constructed from transparent nylon material providing high chemical resistance and is easily disassembled via the provided key for cleaning or reconfiguration.
The Series MMF is a 1-1/2″ (38 mm) scale compact flowmeter ideal for measuring small volume air. It features bezel type mounting that can be quickly installed from the front of the instrument panel.

BENEFITS/FEATURES

- Low installation costs with easy mounting
- Long operation life with durable construction
- Precision molding enables high repeatability
- White back on the flow tube allows for better visibility of the float increasing reading accuracy
- Side printed scale graduations allows for instantaneous flow reading saving time
- Compact bodies require minimal panel space freeing valuable space

APPLICATIONS

- Medical equipment
- Air samplers
- Gas analyzers
- Pollution monitors
- Chemical injectors
- Cabinet purging

SPECIFICATIONS

MMA SPECIFICATIONS

Service: Compatible gases and liquids.
Wetted Materials: Body: Nylon 12; O-rings: Buna-N (optional materials available); Float: Black glass, K monel, stainless steel, tungsten carbide.
Temperature Limit: 130°F (54°C).
Pressure Limit: 100 psi (6.9 bar) with compression fitting. 50 psi (3.4 bar) with tubing clamp.
Accuracy: ±4% FS.
Process Connection: 5/16″ OD for push on rubber or plastic tubing with provided spring tubing clamp. Connect to rigid tubing with double compression fitting.
Weight: 1 oz (28.35 g).
Agency Approvals: Meets the technical requirements of EU Directive 2011/65/EU (RoHS II).

MMF SPECIFICATIONS

Service: Compatible gases and liquids.
Wetted Materials: Body: Styrene acrylonitrile; Float: SS, black glass, nylon; Valve: Polyurethane.
Temperature Limit: 125°F (51°C).
Pressure Limit: 50 psi (3.4 bar). Valve option: 10 psi (0.6 bar).
Accuracy: ±10% FS.
Process Connection: 1/4″ OD for push on rubber or plastic tubing. Connect to rigid tubing with compression fittings.
Weight: 0.5 oz (14.17 g).
Agency Approvals: Meets the technical requirements of EU Directive 2011/65/EU (RoHS II).

MINI-MASTER® FLOWMETERS

2″ or 1-1/2″ Scale, Configurable Valve Option

CALIBRATION SERVICES AVAILABLE

MODEL CHART	
Model	**Description**
MMA-X	Standard MMA
MMA-X-LV	MMA without configurable valve
How To Order: MMA-Range No.-Optional Valve **Example:** MMA -4-LV (Series MMA with .5-5 SCFH air range without configurable valve)	

MODEL CHART	
Model	**Description**
MMF-X	Standard MMF
MMF-X-PV	MMF with bottom mount valve
MMF-X-TMV	MMF with top mount valve
How To Order: MMF-Range No.-Valve **Example:** MMF-1-PV (Series MMF with .1-1 SCFH air range with valve)	

ACCESSORIES - MMA	
Model	**Description**
A-327	5/16″ union

ACCESSORIES - MMF	
Model	**Description**
A-328	1/14″ union

RANGE CHART - MMA			
Range No.	**SCFH Air**	**Range No.**	**LPM Air**
3	.5 to 2.5	20	.2 to 1.2
4	.5 to 5	21	.25 to 2.5
5	1 to 10	22	.5 to 5
6	2 to 20	23	1 to 10
7	5 to 50	24	2.5 to 25
8	10 to 100	25	5 to 50
9	20 to 200	26	10 to 100
10	30 to 300	27	15 to 150
Range No.	**GPH Water**	**Range No.**	**CC/Min. Water**
30	1 to 8	35	5 to 50
31	1 to 16	36	10 to 150
32	4 to 40	37	20 to 200
33	5 to 60	38	50 to 500
Range No.	**LPM Water**		
40	.1 to 1.1		
41	.25 to 2.5		
42	.3 to 3.5		

RANGE CHART - MMF	
Range No.	**Range (SCFH Air)**
1	.1 to 1
2	.2 to 2
10	1 to 10
50	5 to 50
100	10 to 100

OPTIONS	
To order add suffix:	**Description**
-NIST	NIST traceable calibration certificate

MMA-X tubing connections secured by clamp. “Standup” mounting clip shown.

Spring retainers on connection tubes secure panel mounted MMA-X. Compression union, P/N A-327 shown.

Model MMF mounts easily from front of panel. Drill two 9/32″ or 5/16″ dia. holes in panel on 2-1/16″ centers. Insert mounting connector spuds. From rear, slide on the two spring retainers (furnished) and push on rubber or plastic tubing.

Model MMF connections. Connector at top, installed in panel, has retainer and flexible tubing in place. Connector at bottom shows alternative connection with metal or rigid plastic tubing, using a double compression nylon tube union (as Dwyer Part No. A-328).

Dwyer

SERIES UV

ULTRA-VIEW™ POLYSULFONE FLOWMETERS

High Corrosion - Resistant Body, Dual Scales

CALIBRATION SERVICES AVAILABLE

Shown with optional polysulfone fittings

Shown with optional polycarbonate shield

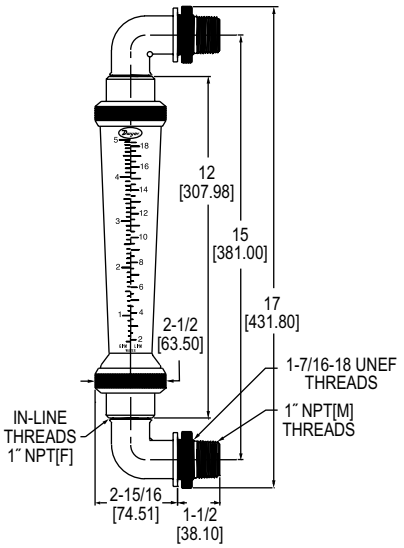

Shown with optional polysulfone fittings

VIDEO ONLINE

The **Series UV Ultra-View™ Polysulfone Flowmeters** are an ultra-pure, laboratory grade flowmeter with a dual scale that measures flow in GPM and LPM of water, air and other compatible media. The Series UV is designed to withstand high temperatures up to 212°F (100°C) and pressures up to 150 psi (10.34 bar).

BENEFITS/FEATURES

- Corrosion-resistant polysulfone body ideal for applications where other flowmeters fail saving replacement cost and time
- Easy to clean body yields low maintenance costs
- Polycarbonate shield protects internal scale increasing product operating life
- Low installation costs with optional panel mount polysulfone fittings

APPLICATIONS

- Chill water flow
- Reverse osmosis systems
- Deionized water systems
- Potable water systems
- Remediation applications

SPECIFICATIONS

Service: Compatible liquids and gases.
Wetted Materials: Polysulfone body and fittings, fluoroelastomer O-rings and virgin PTFE float.
Temperature Limits: 35 to 212°F (2 to 100°C); 35 to 130°F (2 to 54°C) for PVC fitting option.
Pressure Limit: 150 psi (10.34 bar).
Accuracy: ±2% FS @ 70°F ±2°F (21.1°C) and 14.7 psia (in line connection rating only).
Repeatability: ±1% FS @ 70°F ±2°F (21.1°C) and 14.7 psia (in line connection rating only).
Process Connections: 1″ female NPT. Optional 90° polysulfone elbow - 1″ male NPT.
Scale Length: 6″ (152.40 mm) - 7″ (177.80 mm), depending on model.
Fitting Torque: Maximum 22 ft - lb.
Weight: 1 lb (457 g) for 20 GPM range.

CAUTION: Ball valves can have a “water cannon” effect on opening, creating pressure that exceeds the warranty ratings will damage the flowmeter. Series UV Flowmeters are for indoor use only or areas without direct sunlight. Polysulfone is adversely affected by ultraviolet light.

MODEL CHART

Model	Range (GPM water)	Model	Range (SCFM air)
UV-0112	0.25 to 2.5 (1 to 9.5 LPM)	**UV-A112**	1 to 13 (30 to 370 LPM)
UV-1112	0.5 to 5.0 (2 to 19 LPM)	**UV-B112**	2.5 to 28 (70 to 780 LPM)
UV-2112	1.0 to 10.0 (4 to 38 LPM)	**UV-C112**	5 to 50 (70 to 1400 LPM)
UV-3112	2.0 to 20.0 (8 to 76 LPM)	**UV-D112**	14 to 100 (400 to 2800 LPM)
UV-4112	3.0 to 30.0 (12 to 112 LPM)		
UV-5112	4.0 to 40.0 (20 to 150 LPM)		

Note: For PVC 1″ female NPT fittings, change 12 to 22.

OPTIONS

To order add suffix:	Description
-SHD	Protective polycarbonate shield

ACCESSORIES

Model	Description
A-162	In-line fitting replacement kit. Two 1″ female NPT connection fittings included in kit
A-801	Panel mount kit, polysulfone fittings

Dwyer
SERIES LFM

POLYCARBONATE FLOWMETERS

Chemically Resistant, In-Line or Panel Mount Options, Adjustable Set Point Indicator Option

CALIBRATION SERVICES AVAILABLE

LFMA

LFMC

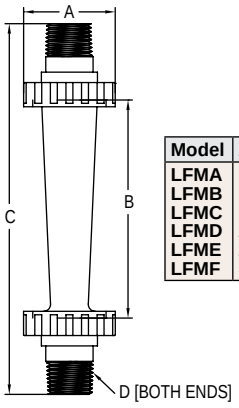

Model	AØ	B	C	D
LFMA	1-21/32 [42.07]	3-15/16 [100.01]	6-45/64 [170.26]	1/2 NPT
LFMB	1-63/64 [50.40]	6-5/16 [160.34]	8-55/64 [225.03]	1/2 NPT
LFMC	1-63/64 [50.40]	5-9/32 [134.14]	8-9/32 [210.34]	1/2 NPT
LFMD	2-21/64 [59.13]	6-45/64 [170.26]	9-27/32 [250.03]	3/4 NPT
LFME	2-27/32 [72.23]	8-55/64 [225.03]	12-19/64 [312.34]	1 NPT
LFMF	3-15/16 [100.01]	11-27/64 [290.12]	15-3/4 [400.05]	2 NPT

The **Series LFM Polycarbonate Flowmeters** are made of precision, injection molded polycarbonate bodies and fittings. This series consists of LFMA, LFMB, LFMC, LFMD, LFME and LFMF flowmeters with 3″ (76 mm), 6″ (152 mm), 5″ (127 mm), 6″ (152 mm), 8″ (203 mm) and 11″ (279 mm) respective scales. They feature dual, direct reading scales measuring in both GPM and LPM.

BENEFITS/FEATURES

- Low installation costs with standard in-line male NPT process connections and 90° elbow fitting for panel mount option
- Heat and chemically resistant polycarbonate body and fittings feature a low cost for high durability
- Textured background on flowmeter bodies enhance scale readability saving time
- Easy to clean bodies yield low maintenance costs
- Adjustable set point indicator allows for easy visual set point indication decreasing costly flow reading error for LFMC, LFMD, LFME & LFMF

APPLICATIONS

- Chill water flow
- Reverse osmosis systems
- Deionized water systems

SPECIFICATIONS

Service: Water.
Wetted Materials: Body: Polycarbonate; Flange nut: ABS; Float stop: LFMA, LFMB, LFMC: ABS; LFMD, LFME, LFMF: Polypropylene; O-rings: Fluoroelastomer; Rod and float: 316 SS; Connections: 20 mm and 63 mm metric union fittings: ABS; 32 mm and 40 mm metric union fittings: PVC; 1/2″ and 3/4″ male NPT fittings for LFMA, LFMB, LFMC: ABS; 3/4″ male and female NPT fittings for LFMD: PA66 nylon; 1″ and 2″ male NPT fittings: PA66 nylon.
Pressure Limit: 87 psi (6 bar) at 68°F (20°C); 90° elbow fittings 116 psi (8 bar) at 68°F (20°C).
Accuracy: ±5%.

Process Connection: LFMA: 1/2″ male NPT. Optional 20 mm metric union; LFMB: 1/2″ male NPT. Optional 20 mm metric union or 1/2″ male NPT with 90° elbow; LFMC: 1/2″ male NPT. Optional 20 mm metric union, 3/4″ male NPT, or 1/2″ male NPT with 90° elbow; LFMD: 3/4″ male NPT. Optional 32 mm metric union, 3/4″ female NPT, or 3/4″ male NPT with 90° elbow; LFME: 1″ male NPT. Optional 40 mm metric union, 1″ female NPT, or 1″ male NPT with 90° elbow; LFMF: 2″ male NPT. Optional 63 mm metric union or 2″ female NPT.
Weight: LFMA: 2 oz (56.7 g); LFMB: 3 oz (85.0 g); LFMC: 4 oz (113.4 g); LFMD: 10 oz (283.5 g); LFME: 15 oz (425.2 g); LFMF: 40 oz (1.1 kg).

CAUTION: Series LFM Flowmeters are for indoor use only or areas without direct sunlight. Polycarbonate is adversely affected by ultraviolet light.

MODEL CHART

Model	Range (GPM Water)
LFMA-01-A2	0.1 to 1 (.5 to 4 LPM)
LFMA-02-A2	0.2 to 2 (1 to 7 LPM)
LFMA-03-A2	0.5 to 5 (1.8 to 18 LPM)
LFMB-04-A2	0.1 to 1 (.5 to 4 LPM)
LFMB-05-A2	0.2 to 2 (1 to 7 LPM)
LFMB-06-A2	0.5 to 5 (1.8 to 18 LPM)

MODEL CHART

Model	Range (GPM Water)	Process Connection
LFMC-07-A2	0.25 to 2.5 (1 to 10 LPM)	1/2″ male NPT
LFMC-08-A2	0.5 to 5 (1.8 to 18 LPM)	1/2″ male NPT
LFMC-09-A2	0.8 to 8 (3 to 30 LPM)	1/2″ male NPT
LFMD-10-C2	0.8 to 8 (3 to 30 LPM)	3/4″ male NPT
LFMD-11-C2	1 to 10 (4 to 40 LPM)	3/4″ male NPT
LFME-12-F2	1.2 to 12 (5 to 50 LPM)	1″ male NPT
LFME-13-F2	2 to 20 (8 to 80 LPM)	1″ male NPT
LFME-14-F2	2.5 to 25 (10 to 100 LPM)	1″ male NPT
LFMF-15-I2	2.5 to 25 (10 to 100 LPM)	2″ male NPT
LFMF-16-I2	5 to 45 (20 to 180 LPM)	2″ male NPT
LFMF-17-I2	7 to 70 (25 to 250 LPM)	2″ male NPT

OPTIONS

Use order code:	Description
NISTCAL-FL2	NIST traceable calibration certificate for variable water flowmeters

ACCESSORIES - LFMA

Model	Description
A-560	20 mm metric union fittings - ABS
A-566	1/2″ male NPT fittings - ABS

ACCESSORIES - LFMB

Model	Description
A-561	20 mm metric union fittings - ABS
A-567	1/2″ male NPT fittings - ABS
A-575	1/2″ male NPT with 90° elbow fittings - PVC

ACCESSORIES - LFMC

Model	Description
A-562	20 mm metric union fittings - ABS
A-567	1/2″ male NPT fittings - ABS
A-568	3/4″ male NPT fittings - ABS
A-576	1/2″ male NPT with 90° elbow fittings - PVC

ACCESSORIES - LFMD

Model	Description
A-563	32 mm metric union fittings - PVC
A-569	3/4″ male NPT fittings - nylon
A-572	3/4″ female NPT fittings - nylon
A-577	3/4″ male NPT with 90° elbow fittings - PVC

ACCESSORIES - LFME

Model	Description
A-564	40 mm metric union fittings - PVC
A-570	1″ male NPT fittings - nylon
A-573	1″ female NPT fittings - nylon
A-578	1″ male NPT with 90° elbow fittings - PVC

ACCESSORIES - LFMF

Model	Description
A-565	63 mm metric union fittings - ABS
A-571	2″ male NPT fittings - nylon
A-574	2″ female NPT fittings - nylon

Dwyer

SERIES VAT

VARIABLE AREA FLUOROPOLYMER FLOWMETER

In-Line, Chemically Inert

CALIBRATION SERVICES AVAILABLE

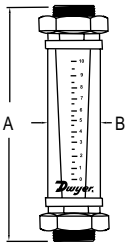

Connection	A	B
1/4″	5-11/16″ [144]	1-1/4″ [31.8]
3/8″	5-11/16″ [144]	1-1/4″ [31.8]
1/2″	10-1/2″ [267]	2″ [50.8]
3/4″	10-1/2″ [267]	2″ [50.8]

The **Series VAT Variable Area Fluoropolymer Flowmeter** is ideal for high purity or corrosive liquid applications. This series of flowmeters features a 0 to 10 scale for flow indication. Each unit is individually leak tested to a leak integrity rating of 1 x 10^{-7} sccs Helium or better.

BENEFITS/FEATURES
- Chemically inert wetted components yield long life even in corrosive liquid applications
- All units are individually leak tested for no additional cost

APPLICATIONS
- Chemical injectors
- Deionized water systems

SPECIFICATIONS

Service: Compatible liquids.
Wetted Materials: Flowtube: PFA; Float and end fittings: PTFE; Guide rods: PCTFE.
Temperature Limit: 250°F (121°C).
Pressure Limit: 100 psig (6.9 bar).
Accuracy: ±5% FS @ 70°F (21.1°C) and 14.7 psia (1 atm absolute).
Process Connections: See chart.
Leak Integrity: 1 x 10^{-7} sccs of helium.
Scale: Direct reading.
Mounting: Vertical, in-line.

MODEL CHART

Model		Low Range	
With Valve	Without Valve	Connections	Flow Rate GPH (ml/min)
VAT-311	VAT-301	1/4″ female NPT	1.98 (125)
VAT-312	VAT-302	1/4″ female NPT	3.91 (250)
VAT-313	VAT-303	1/4″ female NPT	6.34 (400)
VAT-314	VAT-304	1/4″ female NPT	7.92 (500)
VAT-315	VAT-305	1/4″ female NPT	15.85 (1000)
VAT-316	VAT-306	3/8″ female NPT	31.69 (2000)
VAT-317	VAT-307	3/8″ female NPT	39.62 (2500)
VAT-318	VAT-308	3/8″ female NPT	47.54 (3000)
VAT-319	VAT-309	3/8″ female NPT	79.23 (5000)

MODEL CHART

Model		High Range	
With Valve	Without Valve	Connections	Flow Rate GPM (L/min)
VAT-6110	VAT-6010	1/2″ female NPT	3.43 (13)
VAT-6111	VAT-6011	1/2″ female NPT	5.28 (20)
VAT-6112	VAT-6012	3/4″ female NPT	7.93 (30)
VAT-6113	VAT-6013	3/4″ female NPT	10.57 (40)
VAT-6114	VAT-6014	3/4″ female NPT	11.89 (45)

OPTIONS

Use order code:	Description
NISTCAL-FL2	NIST traceable calibration certificate for variable water flowmeters

SERIES TVA

ALL FLUOROPOLYMER FLOWMETERS

75 mm and 125 mm, 10:1 Turndown, Back Connect, Corrosive Resistant

CALIBRATION SERVICES AVAILABLE

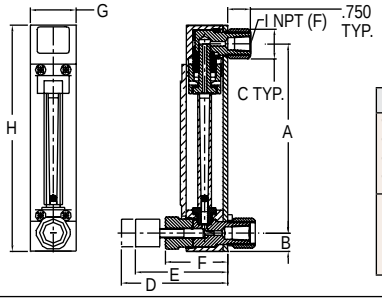

Model	A	B	C	D	E	F	G
TVA11XX	4.97 [126]	0.56 [14]	1.06 [27]	3.35 [85]	1.25 [32]	6.16 [156]	1/4
TVA13XX	4.97 [126]	0.56 [14]	1.25 [32]	4.65 [118]	1.50 [38]	6.16 [156]	3/8
TVA22XX	8.72 [221]	0.88 [22]	1.75 [44]	4.57 [116]	2.00 [51]	10.4 [264]	1/2
TVA24XX	8.47 [215]	1.00 [25]	1.75 [44]	5.95 [151]	2.25 [57]	10.4 [264]	3/4

Note: Panel mounting: Drill two holes: 3/4″ dia. at 4.97″ apart for 1/4″ NPT models, 7/8″ dia. at 4.97″ apart for 3/8″ NPT models, 1″ dia. at 8.72″ apart for 1/2″ NPT models, and 1-1/4″ dia. at 8.47″ apart for 3/4″ NPT models (center-to-center).

The **Series TVA All Fluoropolymer Flowmeters** are ideal for high purity or corrosive liquid applications. This series of flowmeters features a 0 to 10 scale graduations denoting a discrete flow rate.

BENEFITS/FEATURES
- Chemically inert wetted components yield long life even in corrosive liquid applications
- Low installation costs with standard back process connections for easy panel mounting

APPLICATIONS
- Chemical injectors
- Deionized water systems

SPECIFICATIONS

Service: Compatible liquids.
Wetted Materials: Flowtube: PFA; Float and end fittings: PTFE; Guide rods: PCTFE.
Temperature Limit: 250°F (121°C).
Pressure Limit: 100 psig (6.9 bar).
Accuracy: ±5% FS @ 70°F (21.1°C) and 14.7 psia (1 atm absolute).
Repeatability: ±0.25%.
Leak Integrity: 1 x 10^{-7} sccs of helium.
Scales: Direct reading, 75 mm or 125 mm lengths.
Turn-down Ratio: 10:1.
Mounting: Vertical.

MODEL CHART

Model		Low Range		
With Valve	Without Valve	Length	Connections	Flow Rate Water GPH (ml/min)
TVA1113	TVA1103	75 mm	1/4″ female NPT	6.34 (400)
TVA1115	TVA1105	75 mm	1/4″ female NPT	15.9 (1000)
TVA1317	TVA1307	75 mm	3/8″ female NPT	39.6 (2500)
TVA1319	TVA1309	75 mm	3/8″ female NPT	79.2 (5000)

MODEL CHART

Model		High Range		
With Valve	Without Valve	Length	Connections	Flow Rate Water GPM (L/min)
TVA22110	TVA22010	125 mm	1/2″ female NPT	3.43 (13)
TVA24112	TVA24012	125 mm	3/4″ female NPT	7.93 (30)
TVA24114	TVA24014	125 mm	3/4″ female NPT	11.9 (45)

OPTIONS

Use order code:	Description
NISTCAL-FL2	NIST traceable calibration certificate for variable water flowmeters

Dwyer
SERIES VA

VARIABLE AREA GLASS FLOWMETERS

65 mm and 150 mm, ±2% Full-Scale Accuracy, Interchangeable Flowtubes, PTFE Options, Universal mm Scale

CALIBRATION SERVICES AVAILABLE

150 mm

65 mm

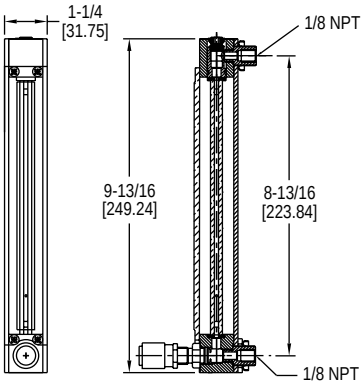

150 mm

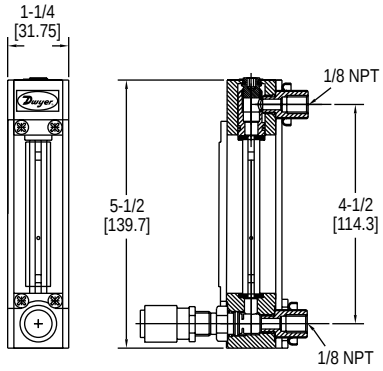

65 mm

Panel mounting: Drill two 5/8˝ dia. holes at 4.5˝ apart for 65 mm models and 8.812˝ apart for 150 mm models (center-to center).

The **Series VA Variable Area Glass Flowmeters** are designed with easy to read universal mm scale and supplied with correlation charts containing calibration data for air and water.

BENEFITS/FEATURES

- Permanently fused ceramic scale with vertical locator line reduces parallax and eye fatigue saving time
- Long operating life with thick polycarbonate front shield that protects tube from breakage and serves as a magnifying lens to enhance reading resolution
- Standard 6-turn needle valve for flow rate control eliminating the need for a separate valve reducing cost
- No additional installation required with optional acrylic tripod base which allows for self-standing bench mounting
- High precision metering valves with non-rising stems are available for high sensitivity control and resolution for very low flow rate

APPLICATIONS

- Gas or liquid metering
- Chemical processing
- Semiconductor systems
- Water and air pollution analysis systems
- Laboratory systems

SPECIFICATIONS

Service: Compatible gases or liquids.
Wetted Materials: Flowtube: Borosilicate glass; Floats: Glass or SS (sapphire, Carboloy and tantalum are optional); Float stops: PTFE; End fittings: Anodized aluminum, 316 SS, brass or PTFE; Packings: Fluoroelastomer, none on VAX5XX models; O-rings: Buna-N on aluminum models and brass models, fluoroelastomer on SS models, PTFE on VAX5XX models.
Temperature Limits: 250°F (121°C); VAX5XX: -15 to 150°F (-26 to 65°C).
Pressure Limits: 200 psig (13.8 bar); VAX5XX: 100 psig (6.7 bar).
Accuracy: ±2% FS @ 70°F (21.1°C) and 14.7 psia (1 atm absolute); VA1043, VA1243, VA1343, VA25425, VA25025: ±5% FS @ 70°F (21.1°C) and 14.7 psia (1 @ absolute).
Repeatability: ±0.25% FS.
Leak Rate: 1 x 10^{-7} sccs of helium.
Scales: Universal 65 mm or 150 mm with correlation charts.
Turn-Down Ratio: 10:1.
Connections: Two 1/8˝ female NPT.
Mounting: Vertical.
Valve: 6-turn needle (standard), optional 16-turn high precision valve.
Valve Orifice: Acetal on aluminum models and brass models, PCTFE on SS models, PTFE on VAX5XX models.

MODEL CHART - METAL 65 MM SCALE

Model				Max. Flow Rate	
Aluminum	SS	Brass	Float	Air SCFH (ml/min)	Water GPH (ml/min)
VA1043	VA1243	VA1343	Glass	0.104 (49)	0.009 (0.55)
VA1044	VA1244	-	SS	0.307 (145)	0.038 (2.38)
VA1045	VA1245	VA1345	Glass	0.220 (104)	0.028 (1.8)
VA1046	VA1246	-	SS	0.633 (299)	0.122 (7.7)
VA1047	VA1247	VA1347	Glass	0.43 (202)	0.041 (2.6)
VA1048	VA1248	-	SS	1.1 (522)	0.19 (12.0)
VA10423	VA12423	VA1349	Glass	2.29 (1081)	0.329 (20.8)
VA10424	VA12424	-	SS	4.51 (2129)	0.930 (58.7)
VA10411	VA12411	VA13411	Glass	2.65 (1249)	0.428 (27)
VA10412	VA12412	-	SS	5.34 (2520)	1.125 (71)
VA10413	VA12413	VA13413	Glass	4.32 (2040)	0.63 (40)
VA10414	VA12414	-	SS	8.45 (3990)	1.71 (108)
VA10417	VA12417	VA13417	Glass	13.4 (6318)	2.33 (147)
VA10418	VA12418	-	SS	25.5 (12058)	5.77 (364)
VA10419	VA12419	VA13419	Glass	27.9 (13153)	4.9 (309)
VA10420	VA12420	-	SS	52.3 (24680)	11.81 (745)
VA10421	VA12421	VA13421	Glass	49.1 (23169)	8.27 (522)
VA10422	VA12422	-	SS	89.2 (42094)	19.97 (1260)

MODEL CHART - METAL 150 MM SCALE

Model				Max. Flow Rate	
Aluminum	SS	Brass	Float	Air SCFH (ml/min)	Water GPH (ml/min)
VA20429	VA22429	VA23429	Glass	0.792 (374)	0.087 (5.5)
VA20430	VA22430	-	SS	1.725 (814)	0.323 (20.4)
VA20433	VA22433	VA23433	Glass	4.9 (2313)	0.848 (54)
VA20434	VA22434	-	SS	9.67 (4562)	2.067 (130)
VA20435	VA22435	VA23435	Glass	8.07 (3807)	1.336 (84)
VA20436	VA22436	-	SS	16.08 (7590)	3.34 (217)
VA20437	VA22437	VA23437	Glass	18.38 (8678)	3.32 (210)
VA20438	VA22438	-	SS	35.5 (16737)	8.02 (506)
VA20439	VA22439	VA23439	Glass	49.9 (23564)	9.0 (568)
VA20440	VA22440	-	SS	93.9 (44336)	21.7 (1370)

OPTIONS

Use order code:	Description
NISTCAL-FL1	NIST traceable calibration certificate for variable air flowmeters
NISTCAL-FL2	NIST traceable calibration certificate for variable water flowmeters

MODEL CHART - PTFE 65 MM SCALE

Model			Max. Flow Rate	
With Valve	Without Valve	Float	Air SCFH (ml/min)	Water GPH (ml/min)
VA1545	VA1505	Glass	0.220 (104)	0.028 (1.8)
VA1547	VA1507	Glass	0.428 (202)	0.047 (2.95)
VA15411	VA15011	Glass	2.646 (1249)	0.428 (27)
VA15413	VA15013	Glass	4.322 (2040)	0.630 (39.7)
VA15417	VA15017	Glass	13.39 (6318)	2.33 (147)
VA15419	VA15019	Glass	27.9 (13153)	4.9 (309)
VA15421	VA15021	Glass	49 (23169)	8.27 (522)

Note: VAX5XX models indicate PTFE units.

MODEL CHART - PTFE 150 MM SCALE

Model			Max. Flow Rate	
With Valve	Without Valve	Float	Air SCFH (ml/min)	Water GPH (ml/min)
VA25425	VA25025	Glass	0.104 (49)	0.01 (0.61)
VA25429	VA25029	Glass	0.792 (374)	0.087 (5.5)
VA25431	VA25031	Glass	1.75 (825)	0.262 (16.5)
VA25435	VA25035	Glass	8.07 (3807)	1.34 (84.3)
VA25437	VA25037	Glass	18.39 (8678)	3.32 (209)

Note: VAX5XX models indicate PTFE units.

ACCESSORIES

Model	Description
VA7	Acrylic tripod for single meter
VA81	High precision valve, 316 SS, 0.42 SCFH capacity
VA82	High precision valve, 316 SS, 0.85 SCFH capacity
VA83	High precision valve, 316 SS, 2.12 SCFH capacity
VA84	High precision valve, 316 SS, 4.87 SCFH capacity
VA85	High precision valve, 316 SS, 13.14 SCFH capacity
VA86	High precision valve, 316 SS, 45.55 SCFH capacity

USA: California Proposition 65
⚠**WARNING:** This product can expose you to chemicals including Lead, which is known to the State of California to cause cancer and birth defects or other reproductive harm. For more information go to www.P65Warnings.ca.gov.

Dwyer

SERIES DR

DIRECT READING GLASS FLOWMETERS

65 mm and 150 mm, Interchangeable Flowtubes, Direct Reading Scales

CALIBRATION SERVICES AVAILABLE

65 mm 150 mm

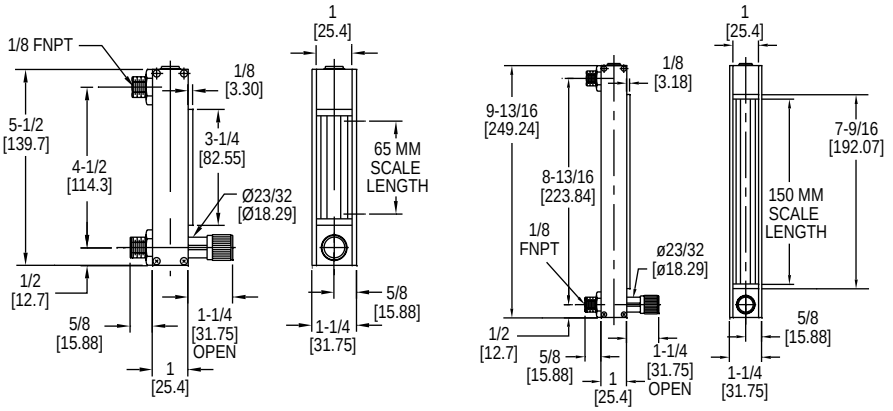

65 mm 150 mm

Panel mounting: Drill two 5/8˝ dia. holes at 4.5˝ apart for 65mm models and 8.812˝ apart for 150 mm models (center-to center).

The **Series DR Direct Reading Glass Flowmeters** are ideal for the direct flow measurement of air, water, and other commonly used gases. These flowmeters are designed with direct read scales with no need for correlation charts. They feature borosilicate glass tubes in 150 mm or 65 mm scales with aluminum and SS metering valve options.

BENEFITS/FEATURES

- Permanently fused ceramic scale with vertical locator line, reflective lens background and 1.5 X magnification lens reduces parallax and eye fatigue saving time
- Long operating life with thick polycarbonate front shield that protects tube from breakage and serves as a magnifying lens to enhance reading resolution
- Optional needle valve for flow rate control eliminating the need for a separate valve reducing cost
- Increased protection with included safety blow-out back panel for added safety

APPLICATIONS

- Gas or liquid metering
- Paper manufacturing
- Chemical processing
- Semiconductor systems
- Water and air pollution analysis systems
- Laboratory systems

SPECIFICATIONS

Service: Compatible gases or liquids.
Wetting Materials: Flowtube: Borosilicate glass; Float: 316 SS (black glass as indicated); Float stops: PTFE; End fittings: Anodized aluminum or 316 SS; O-rings: Buna-N on aluminum models and fluoroelastomer on SS models.
Temperature Limit: 250°F (121°C).
Pressure Limit: 250 psig (17 bar).
Accuracy: ±5% FS @ 70°F (21.1°C) and 14.7 psia (1 atm absolute).
Repeatability: ±0.25% of scale reading.
Scales: Direct reading 65 mm or 150 mm scales for air or water.
Turn-Down Ratio: 10:1.
Connection: 1/8˝ female NPT.
Mounting: Vertical.
Valve: 6-turn needle (standard on models with valve).

MODEL CHART - 65 MM SCALE

Model Without Valve		Model With Valve		Max. Flow Rate
Aluminum	SS	Aluminum	SS	Air SCFH (SCCM)
DR10010*	DR12010*	DR10410*	DR12410*	0.24 (130†)
DR10022	DR12022	DR10422	DR12422	0.65 (300†)
DR10030*	DR12030*	DR10430*	DR12430*	1.1 (500†)
DR10042	DR12042	DR10442	DR12442	2.2 (1000†)

*Denotes glass float.
†Metric models use ccm as unit of measure for water and LPM for air.
Note: Add suffix "M" for metric scale.

MODEL CHART - 65 MM SCALE

Model Without Valve		Model With Valve		Max. Flow Rate
Aluminum	SS	Aluminum	SS	Air SCFH (L/min)
DR10062	DR12062	DR10462	DR12462	5.6 (2.1)
DR10070*	DR12070*	DR10470*	DR12470*	11 (5)
DR10082	DR12082	DR10482	DR12482	20 (9.5)
DR10090*	DR12090*	DR10490*	DR12490*	55 (24)
DR100102	DR120102	DR104102	DR124102	100 (50)

*Denotes glass float.
Note: Add suffix "M" for metric scale.

MODEL CHART - 65 MM SCALE

Model Without Valve		Model With Valve		Max. Flow Rate
Aluminum	SS	Aluminum	SS	Water GPH (SCCM)
DR100120*	DR120120*	DR104120*	DR124120*	0.02 (1.5)
DR100132	DR120132	DR104132	DR124132	0.1 (6.5)
DR100140*	DR120140*	DR104140*	DR124140*	0.13 (8)
DR100152	DR120152	DR104152	DR124152	0.36 (24)
DR100172	DR120172	DR104172	DR124172	0.9 (55)
DR100180*	DR120180*	DR104180*	DR124180*	2.2 (140)
DR100192	DR120192	DR104192	DR124192	4.4 (280)
DR100200*	DR120200*	DR104200*	DR124200*	10 (600)
DR100212	DR120212	DR104212	DR124212	24 (1500)

*Denotes glass float.
Note: Add suffix "M" for metric scale.

MODEL CHART - 150 MM SCALE

Model Without Valve		Model With Valve		Max. Flow Rate
Aluminum	SS	Aluminum	SS	Air SCFH (SCCM)
DR20032	DR22032	DR20432	DR22432	0.33 (160)
DR20082	DR22082	DR20482	DR22482	0.54 (270)
DR200132	DR220132	DR204132	DR224132	2 (840)

Note: Add suffix "M" for metric scale.

MODEL CHART - 150 MM SCALE

Model Without Valve		Model With Valve		Max. Flow Rate
Aluminum	SS	Aluminum	SS	Air SCFH (L/min)
DR200182	DR220182	DR204182	DR224182	3.8 (1.8)
DR200232	DR220232	DR204232	DR224232	10 (4.8)
DR200282	DR220282	DR204282	DR224282	16 (7.5)
DR200332	DR220332	DR204332	DR224332	35 (16)
DR200382	DR220382	DR204382	DR224382	90 (44)

Note: Add suffix "M" for metric scale.

MODEL CHART - 150 MM SCALE

Model Without Valve		Model With Valve		Max. Flow Rate
Aluminum	SS	Aluminum	SS	Water GPH (SCCM)
DR200432	DR220432	DR204432	DR224432	0.05 (3.2)
DR200482	DR220482	DR204482	DR224482	0.075 (4.6)
DR200532	DR220532	DR204532	DR224532	0.34 (21)
DR200582	DR220582	DR204582	DR224582	0.75 (46)
DR200632	DR220632	DR204632	DR224632	2.2 (140)
DR200682**	DR220682	DR204682**	DR224682	3.6 (230)
DR200732	DR220732	DR204732	DR224732	7.5 (480)
DR200782	DR220782	DR204782	DR224782	21 (1300)

**Not available in metric scale.
Note: Add suffix "M" for metric scale.

OPTIONS

Use order code:	Description
NISTCAL-FL1	NIST traceable calibration certificate for variable area air flowmeters
NISTCAL-FL2	NIST traceable calibration certificate for variable area water flowmeters

Dwyer

SERIES IF

INDUSTRIAL DIRECT READING FLOWMETERS

Air/Water Direct Reading Scale, 304 Stainless Steel Protective Shield

CALIBRATION SERVICES AVAILABLE

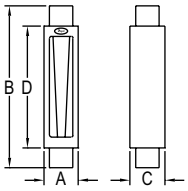

DIMENSIONS					
Tube Size	Female NPT	A	B	C	D
1 and 2	1/2″	2 [50.8]	9.54 [242]	2.25 [57.2]	8.04 [204]
3 and 4	1″	3.5 [89]	13.69 [348]	3.75 [95.3]	10.50 [267]
5 and 6	2″	5 [127]	15.59 [396]	5.25 [133]	11.55 [293]

The **Series IF Industrial Direct Reading Flowmeters** are flowmeters that directly measure flow rates up to 116 GPM (439 LPM) for water and 250 SCFM (7080 LPM) for air service.

BENEFITS/FEATURES
- Direct read scales with no need for correlation charts saves time
- Detachable, clear 3/16″ thick polycarbonate front shield provides protection at maximum rated temperature and pressure

APPLICATIONS
- Gas or liquid metering
- Industrial pneumatic or hydraulic systems

SPECIFICATIONS

Service: Liquids or gases.
Wetted Materials: Flowtube: Borosilicate glass; float, guide rods, float stops, end; Fittings: 316 SS; O-rings: Fluoroelastomer.
Temperature Limit: 200°F (93°C).
Pressure Limit: 200 psi (13.8 bar); 125 psi for tube size 5 and 6.
Accuracy: ±3% of FS.
Repeatability: ±0.5% of FS.
Turn-Down Ratio: 10:1.
Scale: Dual scale GPM and SCFM.
Process Connection: See table.
Mounting: Vertical.
Front Shield: Polycarbonate.
Side Panels: 304 SS.

MODEL CHART

Model	Maximum Flow Rate Water GPM (LPM)	Maximum Flow Rate Air SCFM (LPM)	Tube Size	Press. Drop (in H_2O)	Model	Maximum Flow Rate Water GPM (LPM)	Maximum Flow Rate Air SCFM (LPM)	Tube Size	Press. Drop (in H_2O)	Model	Maximum Flow Rate Water GPM (LPM)	Maximum Flow Rate Air SCFM (LPM)	Tube Size	Press. Drop (in H_2O)
IF2700	0.25 (0.95)	1.2 (35)	1	-	**IF2708**	6 (20)	25.5 (725)	4	5	**IF2716***	41 (155)	160 (4531)	6	5
IF2701	0.36 (1.3)	1.7 (50)	1	2	**IF2709**	7.4 (27.5)	30 (900)	4	6	**IF2717***	44 (167)	180 (5098)	5	30
IF2702	0.76 (3.0)	3.3 (90)	1	5	**IF2710**	9.6 (35)	40 (1200)	4	10	**IF2718***	60 (227)	245 (6938)	6	16
IF2703	1 (3.7)	4.2 (120)	2	6	**IF2711**	11 (40)	47.5 (1400)	4	13	**IF2719***	61 (231)	250 (7080)	5	40
IF2704	1.5 (5.6)	6.5 (180)	2	-	**IF2712**	14 (50)	62 (1800)	4	24	**IF2720***	86 (326)	-	6	25
IF2705	2.2 (8.2)	8.5 (250)	2	10	**IF2713**	20 (75)	90 (2600)	4	39	**IF2721***	116 (439)	-	6	45
IF2706	3.8 (14)	16 (475)	3	10	**IF2714***	22 (83)	90 (2550)	5	16					
IF2707	5 (18)	21.5 (650)	3	14	**IF2715**	26 (98)	-	4	70					

*NIST not available.

OPTIONS

Use order code:	Description
NISTCAL-FL1	NIST traceable calibration certificate for variable air flowmeters
NISTCAL-FL2	NIST traceable calibration certificate for variable water flowmeters

SERIES RSF

ROTATABLE SCALE FLOWMETERS

Dual, Rotatable Direct Reading Scales for Air and Water

CALIBRATION SERVICES AVAILABLE

In-line meter

Panel mount meter

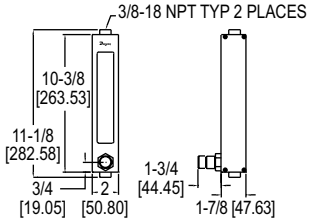

In-line meter

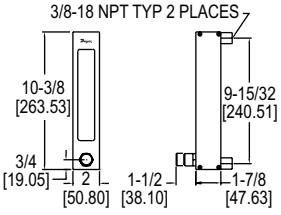

Panel mount meter

The **Series RSF Rotatable Scale Flowmeters** are ideal for the direct flow measurement of air, water, and other commonly used gases. These flowmeters are designed with direct read scales with no need for correlation charts and graduations are marked on a rotating, polycarbonate tube shield. They feature borosilicate glass tubes with brass and SS metering valve options.

BENEFITS/FEATURES
- Reflective lens background and 1.5 X magnification lens reduces parallax and eye fatigue saving time and allowing for a more accurate reading
- Long operating life with thick polycarbonate front shield that protects tube from breakage and serves as a magnifying lens to enhance reading resolution
- Increased protection with included safety blow-out back panel for added safety in the event of breakage

APPLICATIONS
- Gas or liquid metering
- Water and air pollution analysis systems

SPECIFICATIONS

Service: Compatible gases or liquids.
Wetted Materials: Flowtube: Borosilicate glass; Float: Brass/SS models: 316 SS; PTFE models: PTFE; Float stops: Brass/SS models: 316 SS; PTFE models: PTFE; End fittings: Brass/SS models: Brass or 316 SS; PTFE models: PTFE; O-rings: Brass/SS models: Fluoroelastomer; PTFE models: PTFE.
Temperature Limit: 250°F (121°C); PTFE models: 150°F (65°C).
Pressure Limit: 150 psig (10.34 bar) @ 200°F (93°C). PTFE models: 100 psig (6.7 bar).
Accuracy: ±7% FS.
Repeatability: ±0.25% FS.
Scale: Direct Reading 127 mm scales for air and water.
Turn-Down Ratio: 10:1.
Connections: Two 3/8″ female NPT.
Mounting: Vertical or panel mount.
Panel Cutout: Drill two 7/8″ diameter holes 9.469″ (240.5 mm) apart (for panel mount meters only).
Valve: 6-turn needle (standard on models indicating "with valve").

MODEL CHART

Brass and SS Vertical In-Line Meters						Brass and SS Panel Mount Meters					
Model Without Valve		Model With Valve		Max. Flow Rate		Model Without Valve		Model With Valve		Max. Flow Rate	
Brass	SS	Brass	SS	Air SCFM (SLPM)	Water GPM (LPM)	Brass	SS	Brass	SS	Air SCFM (SLPM)	Water GPM (LPM)
RSF011	**RSF111**	**RSF011V**	**RSF111V**	5 (140)	1.2 (4)	**RSF021**	**RSF121**	**RSF021V**	**RSF121V**	5 (140)	1.2 (4)
RSF012	**RSF112**	**RSF012V**	**RSF112V**	10 (280)	2 (8)	**RSF022**	**RSF122**	**RSF022V**	**RSF122V**	10 (280)	2 (8)
RSF013	**RSF113**	**RSF013V**	**RSF113V**	15 (425)	3 (11.5)	**RSF023**	**RSF123**	**RSF023V**	**RSF123V**	15 (425)	3 (11.5)
RSF014	**RSF114**	**RSF014V**	**RSF114V**	20 (575)	4 (15)	**RSF024**	**RSF124**	**RSF024V**	**RSF124V**	20 (575)	4 (15)
RSF015	**RSF115**	**RSF015V**	**RSF115V**	30 (900)	5 (20)	**RSF025**	**RSF125**	**RSF025V**	**RSF125V**	30 (900)	5 (20)

Note: For PTFE models select RSF2XX_ (not available for all models).

OPTIONS

Use order code:	Description
NISTCAL-FL1	NIST traceable calibration certificate for variable air flowmeters
NISTCAL-FL2	NIST traceable calibration certificate for variable water flowmeters

USA: California Proposition 65
⚠**WARNING:** This product can expose you to chemicals including Lead, which is known to the State of California to cause cancer and birth defects or other reproductive harm. For more information go to www.P65Warnings.ca.gov.

Dwyer

SERIES HFPC & HFPS

PLASTIC FLOWMETERS

Mount in any Position, Corrosive Resistant

CALIBRATION SERVICES AVAILABLE

HFPC

HFPS

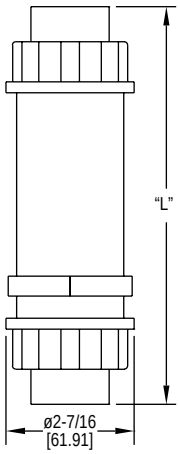

Meter Size	DIM "L"
1/2″ male	7-11/16 [195.26]
1/2″ female	7-5/32 [181.76]
3/4″ male	8-1/32 [204.00]
3/4″ female	7-9/16 [192.09]
1″ male	8-3/32 [205.58]
1″ female	7-9/16 [192.09]

The **Series HFPC & HFPS Plastic Flowmeters** are a series of clear body, in-line flowmeters. This Series consists of the HFPC polycarbonate body flowmeter and the HFPS polysulfone body flowmeter. These flowmeters have dual scales measuring both in GPM and LPM.

BENEFITS/FEATURES

- Clear body allows for visual inspection of the fluid conditions and immediate problem detection
- Reduce cost with multi position mounting to accommodate direction of flow
- Rugged construction allows for high pressure and temperature rating for long operation life
- Injection molded, polycarbonate or polysulfone bodies yield great repeatability

APPLICATIONS

- Chemical processing
- Pulp and paper
- Process control
- Fluid power
- Hydraulic flow
- Heating loop flow

SPECIFICATIONS

Service: Compatible liquids.
Wetted Materials: HFPC: Polycarbonate body, Buna-N seals, SS spring, Polysulfone connections; HFPS: Polysulfone body, Buna-N seals, SS spring, polysulfone connections.
Pressure Limit: 325 psig (22.4 bar).
Temperature Limit: HFPC: 200°F (93°C); HFPS: 250°F (121°C).
Accuracy: ±5% FS.
Repeatability: ±1% FS.
Pressure Loss: See chart.
Weight: Standard models 1 lb (453.6 g). Models with optional brass connections 2 lb (907 g).

CAUTION: Series HFPC & HFPS Flowmeters are for indoor use only or areas without direct sunlight. Polycarbonate and polysulfone are adversely affected by ultraviolet light.

MODEL CHART

Example	HF	PC	-1	-1	-BC	HFPC-1-1-BC
Series	HF					HF plastic flow meters
Wetted Parts		PC				Polycarbonate body, polysulfone connections
		PS				Polysulfone body, polysulfone connections
Connection			1			1/2″ female NPT
			2			3/4″ female NPT
			3			1″ female NPT
			4			1/2″ male NPT brass connections only
			5			3/4″ male NPT brass connections only
			6			1″ male NPT brass connections only
			7			1/2″ female BSPP
			8			3/4″ female BSPP
			9			1″ female BSPP
Range				1		.5 to 5 GPM (1 to 19 LPM)
				2		1 to 10 GPM (3.8 to 38 LPM)
				3		2 to 15 GPM (7.5 to 55 LPM)
				4		3 to 30 GPM (11 to 113 LPM)
Option					BC	Brass connections

TYPICAL PRESSURE DIFFERENTIAL

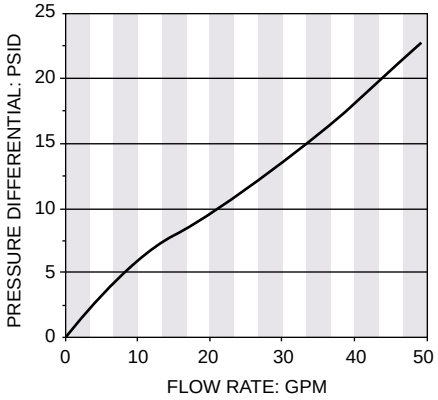

OPTIONS

Use order code:	Description
NISTCAL-FL2	NIST traceable calibration certificate

USA: California Proposition 65
WARNING: This product can expose you to chemicals including Lead, which is known to the State of California to cause cancer and birth defects or other reproductive harm. For more information go to www.P65Warnings.ca.gov.

Dwyer

SERIES HF

IN-LINE FLOW MONITOR

For Air, Water or Caustic Fluids, ±2% Full-Scale, Unrestricted Mounting, High Temperature and Pressure Options

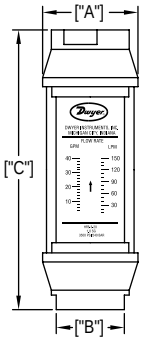

Valve Size	"A" Reference	"B" Wrench Flats	"C" Reference
1/8 NPT	1.25	0.875	4.813
1/4 to 1/2 NPT	1.875	1.250	6.562
3/4 to 1 NPT	2.375	1.750	7.125
1-1/4 to 1-1/2 NPT	3.500	2.250	10.125
2 NPT	3.500	2.250	12.625

The **Series HF In-Line Flow Monitor** is ruggedly constructed and ideal for direct measurement for a range of compatible gases, oil or water based liquids. This Series is designed based on a floating orifice disk and variable area flow measurement. Flowing media forces linear motion of the orifice disk and a ring shaped magnet which ride on a tapered center shaft. The transfer magnet drives a clearly visible magnet follower located outside the flow tube, and a ring on the magnet follower indicates flow rate on the direct reading scale.

BENEFITS/FEATURES
- This unique design allows accurate performance with fluid viscosities up to 500 SSU
- All internal wetted parts are contained inside a sealed metal tubular casing assuring a virtually maintenance-free unit
- Increased application versatility with no inlet or outlet straight plumbing requirement and can be mounted horizontally, vertically, or inverted
- Rugged construction allows for high pressure and temperature rating for long operation life

APPLICATIONS
- Setting pressure relief valves
- Fluid handling equipment
- Detecting low-flow rates for lubricating liquids
- Pulp and paper
- Industrial maintenance
- Fluid power
- Heating loop flow

SPECIFICATIONS

Service: Compatible gases or liquids.
Wetted Materials: HFA: Aluminum casing, Buna-N seals, PTFE coated Alnico magnet, SS disk; HFB: Brass casing, Buna-N seals, PTFE coated Alnico magnet, SS disk; HFS: 303 SS casing, FKM seals with PTFE backup, PTFE coated Alnico magnet, SS disk.
Maximum Viscosity: 500 SSU.
Temperature Limits: 240°F (116°C).
Pressure Limits: HFA, HFB, HFL and HFH models: 600 psig (41 bar) for air and gas, 3500 psig (241 bar) for liquids; HFS model: 1000 psig (70 bar) for air and gas, 6000 psig (413 bar) for liquids.
Accuracy: ±2% FS.
Repeatability: ±1% of FS.
Shipping Weight: 1/4″ to 1/2″ female NPT models; 2 lb (0.9 kg); 3/4 to 1″ female NPT models: 3.5 lb (1.59 kg); 1-1/2″ female NPT models: 11 lb (5 kg); 2″ female NPT models: 13.5 lb (6.12 kg).

Note: Series HF monitors are recommended for use with system filtration of at least 74 microns or a 200 mesh screen.

MODEL CHART - BRASS BODY FOR WATER BASED FLUIDS (NON-STEAM)

Model	Connection Size	Range: Water GPM (LPM)*
HFB-2-05	1/2″ female NPT	0.5 to 5.0 (1 to 19)
HFB-3-15	3/4″ female NPT	2 to 15 (7.5 to 55)
HFB-3-20	3/4″ female NPT	2 to 20 (7.5 to 75)
HFB-4-35	1″ female NPT	5 to 35 (19 to 130)
HFB-5-50	1-1/2″ female NPT	5 to 50 (19 to 189)
HFB-5-100	1-1/2″ female NPT	10 to 100 (38 to 379)
HFB-6-75	2″ female NPT	8 to 75 (31 to 284)
HFB-6-150	2″ female NPT	20 to 150 (76 to 568)

*Dual scale range.

MODEL CHART - ALUMINUM BODY FOR OIL BASED FLUIDS

Model	Connection Size	Range: Oil GPM (LPM)*
HFL-2-05	1/2″ female NPT	0.5 to 5.0 (1 to 19)
HFL-4-25	1″ female NPT	2 to 25 (7.5 to 95)

*Dual scale range.

MODEL CHART - 304 SS BODY FOR HIGH-PRESSURE FLUIDS

Model	Connection Size	Range: Water GPM (LPM)*
HFS-2-02	1/2″ female NPT	0.2 to 2.0 (0.75 to 7.5)
HFS-2-10	1/2″ female NPT	0.5 to 10 (1.9 to 38)

*Dual scale range.

MODEL CHART - ALUMINUM, BRASS, AND STAINLESS STEEL FOR AIR AND OTHER NON-CORROSIVE GASES

Aluminum Model	Brass Model	Stainless Steel Model	Connection (NPT female, dry seal)	Range: SCFM (LPS)*
HFA-1-001	**HFB-1-001**	**HFS-1-001**	1/4″	1.5 to 12 (0.5 to 5.5)
HFA-1-002	**HFB-1-002**	**HFS-1-002**	1/4″	4 to 23 (2 to 10)
HFA-1-003	**HFB-1-003**	**HFS-1-003**	1/4″	5 to 50 (2.5 to 25)
HFA-1-004	**HFB-1-004**	**HFS-1-004**	1/4″	10 to 100 (5 to 45)
HFA-8-001	**HFB-8-001**	**HFS-8-001**	3/8″	1.5 to 12 (.5 to 5.5)
HFA-8-002	**HFB-8-002**	**HFS-8-002**	3/8″	4 to 23 (2 to 10)
HFA-8-003	**HFB-8-003**	**HFS-8-003**	3/8″	5 to 50 (2.5 to 25)
HFA-8-004	**HFB-8-004**	**HFS-8-004**	3/8″	10 to 100 (5 to 45)
HFA-2-001	**HFB-2-001**	**HFS-2-001**	1/2″	1.5 to 12 (.5 to 5.5)
HFA-2-002	**HFB-2-002**	**HFS-2-002**	1/2″	4 to 23 (2 to 10)
HFA-2-003	**HFB-2-003**	**HFS-2-003**	1/2″	5 to 50 (2.5 to 25)
HFA-2-004	**HFB-2-004**	**HFS-2-004**	1/2″	10 to 100 (5 to 45)
HFA-3-003	**HFB-3-003**	**HFS-3-003**	3/4″	5 to 50 (3 to 23)
HFA-3-004	**HFB-3-004**	**HFS-3-004**	3/4″	10 to 100 (4 to 48)
HFA-3-005	**HFB-3-005**	**HFS-3-005**	3/4″	15 to 150 (8 to 56)
HFA-3-006	**HFB-3-006**	**HFS-3-006**	3/4″	30 to 330 (20 to 150)
HFA-4-003	**HFB-4-003**	**HFS-4-003**	1″	5 to 50 (3 to 23)
HFA-4-004	**HFB-4-004**	**HFS-4-004**	1″	10 to 100 (4 to 48)
HFA-4-005	**HFB-4-005**	**HFS-4-005**	1″	15 to 150 (8 to 56)
HFA-4-006	**HFB-4-006**	**HFS-4-006**	1″	30 to 330 (20 to 150)
HFA-9-007	**HFB-9-007**	**HFS-9-007**	1-1/4″	30 to 470 (15 to 220)
HFA-9-008	**HFB-9-008**	**HFS-9-008**	1-1/4″	150 to 900 (75 to 425)
HFA-5-007	**HFB-5-007**	**HFS-5-007**	1-1/2″	30 to 470 (15 to 220)
HFA-5-008	**HFB-5-008**	**HFS-5-008**	1-1/2″	150 to 900 (75 to 425)

*Dual scale range.

USA: California Proposition 65
⚠**WARNING:** This product can expose you to chemicals including Lead, which is known to the State of California to cause cancer and birth defects or other reproductive harm. For more information go to www.P65Warnings.ca.gov.

Dwyer

SERIES RMV

RATE-MASTER® DIAL-TYPE FLOWMETER

Brass Body, Three Ranges to 20 GPM Water, Shatterproof Construction

CALIBRATION SERVICES AVAILABLE

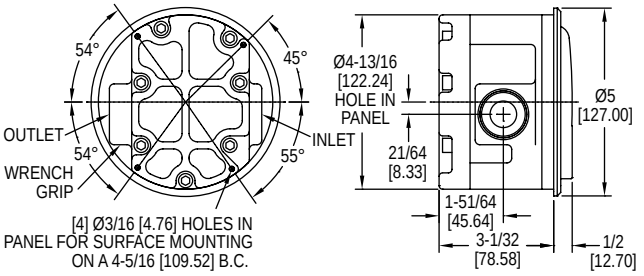

The **Series RMV Rate-Master® Dial-Type Flowmeter** measures higher water flow rates with ±2% of full-scale accuracy at an affordable price. Stocked models are fitted with 1″ female NPT inlet and outlet; 3/4″ and 1/2″ sizes are also available. Install in line, supported by piping or flush panel mount with complete hardware package included.

BENEFITS/FEATURES
- Rugged forged brass housing yields great compatibility and strength, allowing the unit to withstand system pressures to 1000 psig (68.9 bar)
- Shatter proof construction, unlike glass tube variable area flowmeters, yields long operation life

APPLICATIONS
- Monitor coolant flow through ingot heaters, high-amp switchgear, resistance welders, heat exchangers, compressors, scrubbers
- Monitor water consumption to different processes and operations for more efficient operations
- Calculate required fill or drain times for tanks, water towers

OPTIONS	
To order add suffix:	**Description**
-NIST	NIST traceable calibration certificate
Example: RMV-1-3-NIST	

SPECIFICATIONS

Service: Compatible liquids.
Wetted Materials: Brass, copper, 302 SS, sintered barium ferrite.
Temperature Limits: 20 to 200°F (-6.7 to 93°C).
Pressure Limit: 1000 psig (68.9 bar).
Pressure Drop: 0 to 5 GPM: 3.2 psid; 0 to 10 GPM: 5.3 psid; 0 to 20 GPM: 10.4 psid.
Accuracy: ±2% of FS.
Size: Diameter dial face 4″ (101.6 mm).
Process Connections: See chart.
Maximum Flow: 1.5 x FS reading.
Weight: 9 lb (4.08 kg).

MODEL CHART

Model	Range, GPM Water	Connection Size
RMV-1-3	0 to 5	1″ female NPT
RMV-2-3	0 to 10	1″ female NPT
RMV-3-3	0 to 20	1″ female NPT
RMV-1-2	0 to 5	3/4″ female NPT
RMV-2-2	0 to 10	3/4″ female NPT
RMV-3-2	0 to 20	3/4″ female NPT
RMV-1-1	0 to 5	1/2″ female NPT
RMV-2-1	0 to 10	1/2″ female NPT
RMV-3-1	0 to 20	1/2″ female NPT

USA: California Proposition 65
⚠**WARNING:** This product can expose you to chemicals including Lead, which is known to the State of California to cause cancer and birth defects or other reproductive harm. For more information go to www.P65Warnings.ca.gov.

SERIES RMVII

RATE-MASTER® DIAL-TYPE FLOWMETER

For Panel Mounting, Three Ranges to 10 GPM Water, High Pressure Limits

CALIBRATION SERVICES AVAILABLE

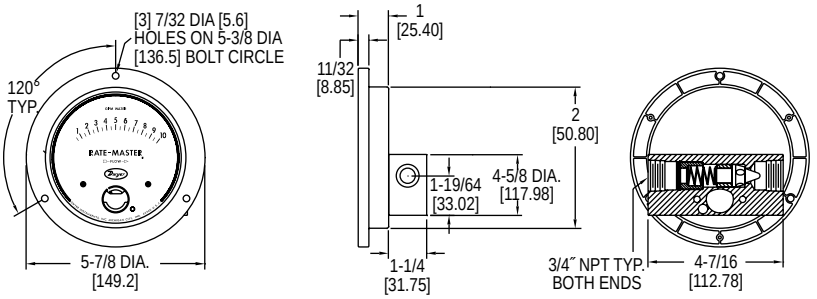

*FITS IN ANSI STANDARD 4.940 [125.5] PANEL CUTOUT

The **Series RMVII Rate-Master® Dial-Type Flowmeter** consists of a machined brass meter body which is ideally suited for water flows with ±5% of full-scale accuracy. Body design fits standard 4-1/2″ mounting hole layouts per ANSI B40.1. Inlet and outlet threads are standard 3/4″ female NPT.

BENEFITS/FEATURES
- Unique construction fully isolates flowing media from gage front for leak-proof operation at pressures up to 3000 psig (206.7 bar)
- Target-type design combined with a damage resistant magnetic linkage, drive a pointer over easy-to-read litho scale
- Shatter proof construction, unlike glass tube variable area flowmeters, yields long operation life

APPLICATIONS
- Monitor coolant flow through ingot heaters, high-amp switchgear, resistance welders, heat exchangers, compressors, scrubbers
- Monitor water consumption to different processes and operations for more efficient operations
- Calculate required fill or drain times for tanks, water towers

OPTIONS	
To order add suffix:	**Description**
-NIST	NIST traceable calibration certificate
Example: RMVII-1-NIST	

SPECIFICATIONS

Service: Compatible gases, liquids and oils.
Wetted Materials: Brass, 302 SS, sintered barium ferrite, polyacetyl.
Temperature Limit: 200°F (93°C).
Pressure Limit: 3000 psig (206 bar).
Pressure Drop: 0 to 5 GPM: 3.2 psid; 0 to 10 GPM: 5.3 psid; 0 to 20 GPM: 10.4 psid.
Accuracy: ±5% of FS.
Size: Diameter dial face 4.5″ (114.3 mm).
Process Connections: 3/4″ female NPT.
Weight: 2 lb, 14 oz (1.3 kg).

MODEL CHART

Model	Range GPM Water	Range SCFM	Range LPM Air	Range GPM Oil	Range LPM Oil
RMVII-1	0 to 3	-	-	-	-
RMVII-3	0 to 5	-	-	-	-
RMVII-6	0 to 10	-	-	-	-
RMVII-10	-	0 to 10	0 to 280	-	-
RMVII-12	-	0 to 30	0 to 850	-	-
RMVII-14	-	0 to 50	0 to 1400	-	-
RMVII-20	-	-	-	0 to 2.2	0 to 8
RMVII-21	-	-	-	0 to 4.0	0 to 15
RMVII-22	-	-	-	0 to 8.5	0 to 32

USA: California Proposition 65
⚠**WARNING:** This product can expose you to chemicals including Lead, which is known to the State of California to cause cancer and birth defects or other reproductive harm. For more information go to www.P65Warnings.ca.gov.

Dwyer

SERIES VFLO

VENTURI FLOWMETER WITH MAGNEHELIC® GAGE

±2.5% Accuracy, Dual Scale in SCFM and in w.c.

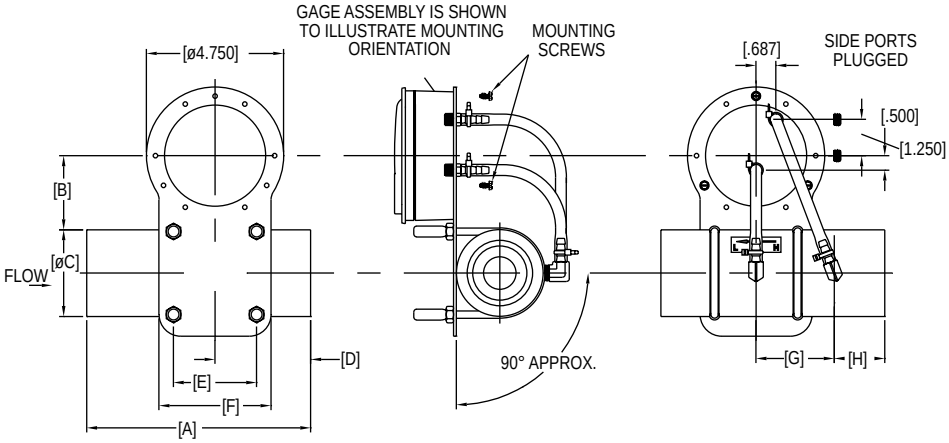

VFLO Option	Line Size	A	B	ØC	D	E	F	G	H	J	K
XXXX-XXVF1	1″ FNPT	4.500	2.687	2	2.015	2.125	3.125	1.359	1.125	4.625	6.375
XXXX-XXVF2	1.5″ FNPT	6	2.562	2.500	2.625	2.375	3.375	2	1.375	5.250	7.125
XXXX-XXVF3	2″ FNPT	7.750	2.562	3	3.312	2.875	3.875	2.703	1.750	5.750	7.875
XXXX-XXVF4	3″ FNPT	11	2.734	4	4.625	4	5.500	4	2.375	7	9.625
XXXX-XXVF5	4″ FNPT	14.500	2.734	5.000	5.172	5.000	6.500	5.328	3.000	9.250	11.500

The **Series VFLO Venturi Flowmeter with Magnehelic® Gage** is fabricated from aluminum and has a gradual Venturi profile to reduce pressure losses through the meter. Flowmeter can be used in a vertical or horizontal position just by rotating the Magnehelic® gage. The Magnehelic® gage provides a large, clear and accurate display of your differential pressure reading. Each meter is calibrated at standard atmospheric conditions. The dual scale reads in SCFM and in w.c. The meter is supplied with easy to read reference charts for various flow conditions. It is available in line sizes from 1″ to 4″ and can handle vacuum and pressure applications.

BENEFITS/FEATURES

- Gradual Venturi profile reduces pressure losses through meter helping to insure a more accurate measurement to meet measurement specifications
- Easy to read gage through undistorted plastic face permits viewing from far away
- Patented design provides quick response to pressure changes means no delay in assessing critical situations
- Durable and rugged housing and high-quality components combined provides long-service life and minimized down-time

APPLICATIONS

- Filter monitoring
- Air velocity with Dwyer pitot tube
- Blower vacuum monitoring
- Fan pressure indication
- Duct, room or building pressures
- Clean room positive pressure indication

Series 2000, Magnehelic® Differential Pressure Gage
To Create Venturi Model, add option from chart to end of 2000.
Example: 2000-10VF1 for 10 in w.c. and 20 SCFM of air scale with 1″ Venturi flow tube

SPECIFICATIONS

Service: Air and non-combustible, compatible gases.
Wetted Materials: Aluminum, silicone, acrylic, polycarbonate, high carbon steel, low carbon steel, brass, paper, acrylic paint, enamel paint, alkyd coating, nickel plate, zinc plate, helsel FC, 300 series stainless steel, PTFE, Loctite® AV sealant, commercial black rubber, neoprene, samarium cobalt, nickel alloy steel cover, beryllium copper.
Housing: Die cast aluminum case and bezel, with acrylic cover. Exterior finish is coated gray to withstand 168 hour salt spray corrosion test.
Accuracy: ±2.5% FS.
Pressure Limits: -20″ Hg to 15 psig (-0.677 bar to 1.034 bar); MP option: 35 psig (2.41 bar). For applications with high cycle rate within gage total pressure rating, next higher rating is recommended.
Overpressure: Relief plug opens at approximately 25 psig (1.72 kPa).
Temperature Limits: 20 to 140°F (-6.67 to 60°C).
Size: 4″ (101.6 mm) diameter dial face.
Mounting Orientation: Diaphragm in vertical position. Consult factory for other position orientations.
Process Connection: Female NPT of nominal line size. (See chart).
Weight: Gage only: 1 lb 2 oz (510 g), MP and HP 2 lb 2 oz (963 g); Venturi: See chart.

OPTIONS

Option	Range	Line Size	Weight (Not Including Gage) lb (kg)
2000-10VF1	0 to 10 in w.c. and 0 to 20 SCFM air	1″	3 (1.36)
2000-20VF1	0 to 20 in w.c. and 0 to 30 SCFM air	1″	3 (1.36)
2000-40VF1	0 to 40 in w.c. and 0 to 40 SCFM air	1″	3 (1.36)
2000-10VF2	0 to 10 in w.c. and 0 to 50 SCFM air	1-1/2″	4.5 (2.04)
2000-20VF2	0 to 20 in w.c. and 0 to 70 SCFM air	1-1/2″	4.5 (2.04)
2000-40VF2	0 to 40 in w.c. and 0 to 100 SCFM air	1-1/2″	4.5 (2.04)
2000-10VF3	0 to 10 in w.c. and 0 to 85 SCFM air	2″	6 (2.72)
2000-20VF3	0 to 20 in w.c. and 0 to 120 SCFM air	2″	6 (2.72)
2000-40VF3	0 to 40 in w.c. and 0 to 160 SCFM air	2″	6 (2.72)
2000-10VF4	0 to 10 in w.c. and 0 to 200 SCFM air	3″	11 (4.99)
2000-20VF4	0 to 20 in w.c. and 0 to 290 SCFM air	3″	11 (4.99)
2000-40VF4	0 to 40 in w.c. and 0 to 395 SCFM air	3″	11 (4.99)
2000-10VF5	0 to 10 in w.c. and 0 to 350 SCFM air	4″	18 (8.16)
2000-20VF5	0 to 20 in w.c. and 0 to 500 SCFM air	4″	18 (8.16)
2000-40VF5	0 to 40 in w.c. and 0 to 675 SCFM air	4″	18 (8.16)

**Venturi price must be added to Series 2000 Magnehelic® gage price.

ACCESSORIES

Model	Description
MVB-TM1	Mini brass valve with tee handle. 1/8″ M X 1/8″ FNPT
MVB-WM1	Mini brass ball valve with wedge handle. 1/8″ M X 1/8″ FNPT

USA: California Proposition 65
⚠ **WARNING:** This product can expose you to chemicals including Lead, which is known to the State of California to cause cancer and birth defects or other reproductive harm. For more information go to www.P65Warnings.ca.gov.

Loctite® is a registered trademark of HENKEL IP & HOLDING GMBH

Dwyer

SERIES DS

IN-LINE FLOW SENSORS

Use with the Dwyer® Differential Pressure Gages or Transmitters

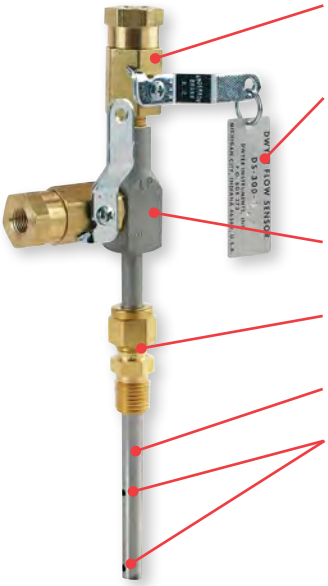

Valves — Standard, brass with TFE seat and Buna-N O-ring.

Nameplate — Stainless steel permanently attached with split ring. Includes complete size and model information.

Head — Machined stainless steel.

Packing gland — Brass compression fitting.

Sensor tube — 304 SS.

Sensing ports — Multiple upstream and downstream ports sized and positioned to provide effective accurate pressure averaging, even at lower velocities.

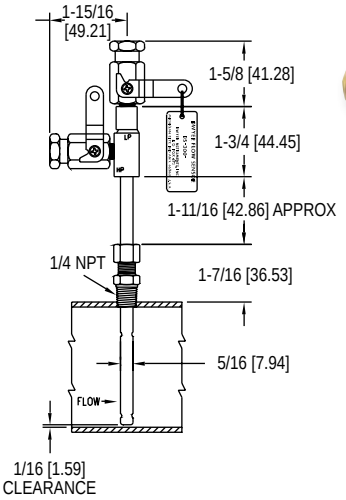

Series DS-300

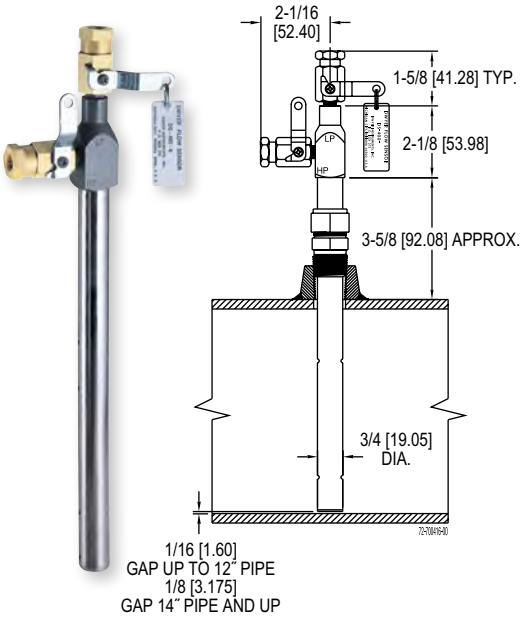

Large 3/4 inch diameter for extra strength in lengths to 24 inches

Series DS-400

The **Series DS In-Line Flow Sensors** are two Series of averaging Pitot tubes for compatible gases and liquids that provide accurate and convenient flow rate sensing, for schedule 40 pipe, when purchased with suitable differential pressure gage with appropriate range. The Series DS-300 Averaging Flow Sensors are designed to be inserted in the pipeline through a compression fitting and available for pipe sizes from 1 to 10″ (2.5 to 25.4 cm). Accessories include adapters with 1/4″ SAE 45° flared ends compatible with hoses supplied with the Model A-471 Portable Capsuhelic® Gage Kit. The Series DS-400 Averaging Flow Sensors are designed for insertion lengths up to 24″ (61 cm) and include a pair of 1/8″ NPT x 1/4″ SAE 45° flared adapters which are compatible with hoses used in the Model A-471 Portable Capsuhelic® Gage Kit. The supplied solid brass mounting adaptor has a 3/4″ dia. compression fitting to lock in required insertion length and a 3/4″ male NPT thread for mounting in a threaded branch connection (not included).

SPECIFICATIONS

Service: Compatible gases or liquids.
Wetted Materials: Sensor tube: 304 SS; Compression fitting: brass.
Temperature Limit: 200°F (93.3°C).
Pressure Limit: 200 psig (13.78 bar) at 200°F (93.3°C).
Pipe Sizes: DS-300: 1 to 10″ (2.5 to 25.4 cm); DS-400: 6 to 24″ (15.2 to 61 cm).
Process Connections: DS-300: 1/4″ male NPT compression fitting included; DS-400: 3/4″ male NPT compression fitting included.
Piping Connections: DS-300: 1/8″ female NPT; optional 1/8″ female NPT x 1/4″ SAE 45 flared adaptor sold separately; DS-400: 1/8″ female NPT with 1/8″ female NPT x 1/4″ SAE 45 flared adapters include.
Weights: Consult factory.

BENEFITS/FEATURES

- Multiple sensing point measurement and built-in averaging capability eliminates the need for “traversing” the flowing stream with single point velocity pressure measurement saving time
- Extremely reliable, proven technology, Pitot tubes, have been used in flow measurement for years
- All models include convenient and quick-acting quarter-turn ball valves to isolate the sensor for zeroing with 1/8″ female NPT valve assembly process connections.
- Furnished with instrument shut-off valves on both pressure connections with 1/8″ female NPT connections rated at 200 psig (13.7 bar) and 200°F (93.3°C)
- Where valves are not required, they can be omitted at reduced cost
- The Series DS-400 Averaging Flow Sensors are quality constructed from extra strong 3/4″ dia. stainless steel to resist increased forces encountered at higher flow rates with both air and water
- Economical flow indication when used with appropriate differential pressure gage
- Rugged construction yields, non-clogging, stable design

APPLICATIONS

- Remediation
- Natural, flare, flue, stack gas
- Boiler feedwater
- Cooling water
- Superheated, saturated, or geothermal steam
- Combustion or compressed air
- Oil flow monitoring

USA: California Proposition 65
⚠**WARNING:** This product can expose you to chemicals including Lead, which is known to the State of California to cause cancer and birth defects or other reproductive harm. For more information go to www.P65Warnings.ca.gov.

IN-LINE FLOW SENSORS

Use with the Dwyer® Differential Pressure Gages or Transmitters

HOW TO ORDER

Merely determine the pipe size into which the flow sensor will be mounted and designate the size as a suffix to Model DS-300. For example, a flow sensor to be mounted in a 2″ pipe would be a Model No. DS-300-2″.

For non-critical water and air flow monitoring applications, the chart below can be utilized for ordering a stock Capsuhelic® differential pressure gage for use with the DS-300 flow sensor. Simply locate the maximum flow rate for the media being measured under the appropriate pipe size and read the Capsuhelic® gage range in inches of water column to the left. The DS-300 sensor is supplied with installation and operating instructions, Bulletin F-50. It also includes complete flow conversion information for the three media conditions shown in the chart below. This information enables the user to create a complete differential pressure to flow rate conversion table for the sensor and differential pressure gage employed. Both the Dwyer® Capsuhelic® gage and flow sensor feature excellent repeatability so, once the desired flow rate is determined, deviation from that flow in quantitative measure can be easily determined. You may wish to order the adjustable signal flag option for the Capsuhelic® gage to provide an easily identified reference point for the proper flow.

Capsuhelic® gages with special ranges and/or direct reading scales in appropriate flow units are available on special order for more critical applications. Customer supplied data for the full-scale flow (quantity and units) is required along with the differential pressure reading at that full flow figure. Prior to ordering a special Capsuhelic® differential pressure gage for flow read-out, we recommend you request Bulletin F-50 to obtain complete data on converting flow rates of various media to the sensor differential pressure output. With this bulletin and after making a few simple calculations, the exact range gage required can easily be determined.

RANGE CHART

Gage Range (in w.c.)	Media @ 70°F	Full Range Flows by Pipe Size (Approximate)									
		1″	1-1/4″	1-1/2″	2″	2-1/2″	3″	4″	6″	8″	10″
2	Water (GPM)	4.8	8.3	11.5	20.5	30	49	86	205	350	560
2	Air @ 14.7 PSIA (SCFM)	19.0	33.0	42.0	65.0	113	183	330	760	1340	2130
2	Air @ 100 PSIG (SCFM)	50.0	90.5	120.0	210.0	325	510	920	2050	3600	6000
5	Water (GPM)	7.7	14.0	18.0	34.0	47	78	138	320	560	890
5	Air @ 14.7 PSIA (SCFM)	30.0	51.0	66.0	118.0	178	289	510	1200	2150	3400
5	Air @ 100 PSIG (SCFM)	83.0	142.0	190.0	340.0	610	820	1600	3300	5700	10000
10	Water (GPM)	11.0	19.0	25.5	45.5	67	110	195	450	800	1260
10	Air @ 14.7 PSIA (SCFM)	41.0	72.0	93.0	163.0	250	410	725	1690	3040	4860
10	Air @ 100 PSIG (SCFM)	120.0	205.0	275.0	470.0	740	1100	2000	4600	8100	15000
25	Water (GPM)	18.0	32.0	40.5	72.0	108	173	310	720	1250	2000
25	Air @ 14.7 PSIA (SCFM)	63.0	112.0	155.0	255.0	390	640	1130	2630	4860	7700
25	Air @ 100 PSIG (SCFM)	185.0	325.0	430.0	760.0	1200	1800	3300	7200	13000	22000
50	Water (GPM)	25.0	44.0	57.5	100.0	152	247	435	1000	1800	
50	Air @ 14.7 PSIA (SCFM)	90.0	161.0	205.0	360.0	560	900	1600	3700	6400	
50	Air @ 100 PSIG (SCFM)	260.0	460.0	620.0	1050.0	1700	2600	4600	10000	18500	
100	Water (GPM)	36.5	62.0	82.0	142.0	220	350	620	1500		
100	Air @ 14.7 PSIA (SCFM)	135.0	230.0	300.0	505.0	800	1290	2290	5000		
100	Air @ 100 PSIG (SCFM)	370.0	660.0	870.0	1500.0	2300	3600	6500	15000		

MODEL CHART

Model	Description	Model	Description
DS-300-1″	1″ pipe size	**DS-400-6″**	6″ pipe size
DS-300-1-1/4″	1-1/4″ pipe size	**DS-400-8″**	8″ pipe size
DS-300-1-1/2″	1-1/2″ pipe size	**DS-400-10″**	10″ pipe size
DS-300-2″	2″ pipe size	**DS-400-12″**	12″ pipe size
DS-300-2-1/2″	2-1/2″ pipe size	**DS-400-14″**	14″ pipe size
DS-300-3″	3″ pipe size	**DS-400-16″**	16″ pipe size
DS-300-4″	4″ pipe size	**DS-400-18″**	18″ pipe size
DS-300-6″	6″ pipe size	**DS-400-20″**	20″ pipe size
DS-300-8″	8″ pipe size	**DS-400-24″**	24″ pipe size
DS-300-10″	10″ pipe size		

ACCESSORIES

Model	Description
A-161	Brass bushing, 1/4″ x 3/8″

OPTIONS

To order add suffix:	Description
-LV	DS-300 or DS-400 less valves

-LV option

USA: California Proposition 65
WARNING: This product can expose you to chemicals including Lead, which is known to the State of California to cause cancer and birth defects or other reproductive harm. For more information go to www.P65Warnings.ca.gov.

See page 31 (Series 4000)

Dwyer

SERIES OP, PE & TE

ORIFICE PLATE FLOWMETERS

PVC or PTFE, Liquid and Gas Use Options

OP

TE

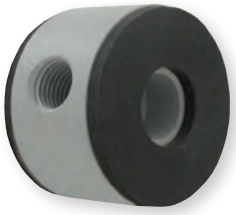

PE

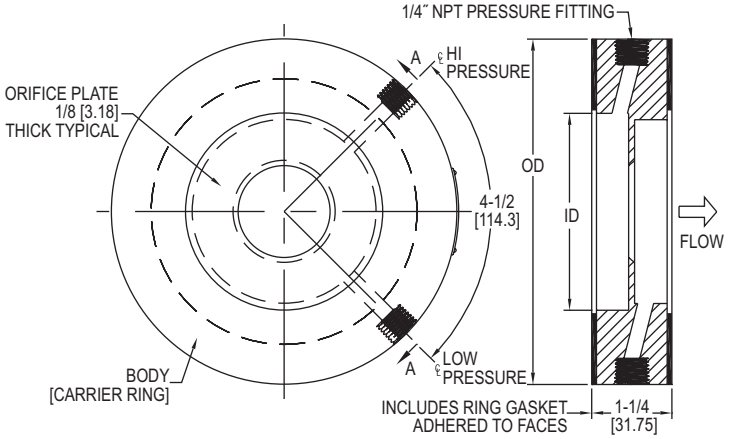

The **Series OP Orifice Plate Flowmeters** are a complete flow metering package. They incorporate a stainless steel orifice plate with a unique holder or carrier ring containing metering taps and integral gaskets. The Series OP is available in line sizes from 1/2″ to 24″ and can be used with compatible liquids and gases.

BENEFITS/FEATURES
- Mounted with standard flanges with no need of specialty flanges
- Reduced installation costs with simple installation by slipping the unit between standard flanges
- Easy access with corner type metering taps
- Long operation life with corrosion free material
- Stainless steel wetted parts assures long term reliability and accuracy
- Proven through a wide range of applications for energy efficiency

APPLICATIONS
- Fluid flow rates in building water lines
- Boiler feedwater
- Cooling water
- Combustion or compressed air
- Steam flow

The **Series PE & TE Orifice Plate Flowmeters** are two series of plastic orifice plate flow metering packages incorporating a unique holder or carrier ring containing metering taps and integral gaskets. They can be used in place of other primary differential products for efficiency and cost effectiveness.
The Series PE orifice plate flowmeter is of PVC construction and is available in line sizes from 1/2 to 24″. This series can be used for air and most gases and meets or exceeds ASME, AGA and ISO standards.
The Series TE orifice plate flowmeter is of PTFE construction and is available in line sizes from 1/2 to 24″. This Series can be used with gases, liquids, corrosive and high temperature fluids.

BENEFITS/FEATURES
- Mounted with standard flanges with no need of specialty flanges
- Reduced installation costs with simple installation by slipping the unit between standard flanges
- Easy access with corner type metering taps
- Long operation life with corrosion free material
- Proven through a wide range of applications for energy efficiency
- PTFE construction yields excellent chemical and weather resistance
- TE models are flame retardant without factory gaskets
- Low friction leading to minimum wear and long operation life

APPLICATIONS
- Fluid flow rates in building water lines
- Boiler feedwater
- Cooling water
- Combustion or compressed air
- Steam flow

SPECIFICATIONS

Service: OP & TE: Compatible liquids and gases; PE: Clean air and compatible gases.
Wetted Material: OP: 304 SS, Buna-N gaskets; PE: Gray PVC, Buna-N gaskets; TE: PTFE, Buna-N gaskets.
Accuracy: 0.6% FS. (Beta = .2-.6) ±0.7% for Beta greater than .6.
Temperature Limits: OP: -50 to 200°F (-45 to 93°C); PE: 140°F (60°C) max; TE: -40 to 200°F (-40 to 93.3°C).
Pressure Limits: OP: Limited only by pipe and flange rating restrictions.
Head Loss: 1-Beta ratio2 eg: 1-0.72 = 1-0.49 = 51% of the d.p.
Line Sizes: 1/2″ to 24″.
Process Connection: 1/4″ female NPT.
Installation: Standard flange. OP: Any rating (orifice flanges not required); PE & TE: 125#/150# rating.
Pipe Requirements: General requirements 10 diameter upstream and 5 diameter downstream of orifice plate.
Weight: Varies with line size. See chart.

ORIFICE PLATE FLOWMETERS

PVC or PTFE, Liquid and Gas use Options

SERIES OP ORIFICE PLATE FLOWMETER – CAPACITY STRUCTURE
- Material 304/304 L, gaskets Buna-N
- Based on 70°F, 14.7 psia (base conditions)
- Beta value based on std sch pipe I.D.
- 1.25″ overall thickness
- Orifice plate thickness is 0.125″

SERIES PE ORIFICE PLATE FLOWMETER – AIR CAPACITY STRUCTURE
- Material PVC, gaskets Buna-N
- Based on 70°F, 14.7 psia (base conditions)
- Beta value based on std sch pipe I.D.
- 1.25″ overall thickness
- Orifice plate thickness is 0.125″

SERIES TE ORIFICE PLATE FLOWMETER – CAPACITY STRUCTURE
- Material PTFE, gaskets Buna-N
- Based on 70°F, 14.7 psia (base conditions)
- Beta value based on std sch pipe I.D.
- 1.25″ overall thickness
- Orifice plate thickness is 0.250″

MODEL CHART

									Water Capacity		Air Capacity - Flow in SCFM			
OP Model	OP Weight (lb)	PE Model	PE Weight (lb)	TE Model	TE Weight (lb)	Line Size	Bore	Beta	in d.p. w.c.	Flow in GPM	in d.p. w.c.	at 14.7 psia (0 psig)	at 20 psig	at 100 psig
OP-A-1	1.00	**PE-A-1**	1.00	**TE-A-1**	1.00	1/2″	0.200″	0.32	20	0.62	20	2.35	3.63	6.61
OP-A-2	1.00	**PE-A-2**	1.00	**TE-A-2**	1.00	1/2″	0.310″	0.50	100	3.44	100	12.21	19.58	36.37
OP-A-3	1.00	**PE-A-3**	1.00	**TE-A-3**	1.00	1/2″	0.430″	0.69	320	13.00	200	32.77	56.15	107.47
OP-B-1	1.00	**PE-B-1**	1.00	**TE-B-1**	1.00	3/4″	0.250″	0.30	20	0.97	20	3.65	5.66	10.3
OP-B-2	1.00	**PE-B-2**	1.00	**TE-B-2**	1.00	3/4″	0.400″	0.49	100	5.69	100	20.21	32.44	60.26
OP-B-3	1.00	**PE-B-3**	1.00	**TE-B-3**	1.00	3/4″	0.580″	0.70	320	23.82	200	59.92	102.91	197.2
OP-C-1	2.00	**PE-C-1**	1.00	**TE-C-1**	1.00	1″	0.300″	0.29	20	1.38	20	5.24	8.11	14.8
OP-C-2	2.00	**PE-C-2**	1.00	**TE-C-2**	1.00	1″	0.520″	0.49	100	9.63	100	34.2	54.92	102.09
OP-C-3	2.00	**PE-C-3**	1.00	**TE-C-3**	1.00	1″	0.720″	0.69	320	36.15	200	91.28	156.51	300
OP-D-1	2.00	**PE-D-1**	1.00	**TE-D-1**	1.00	1.25″	0.400″	0.29	20	2.46	20	9.31	14.41	26.3
OP-D-2	2.00	**PE-D-2**	1.00	**TE-D-2**	1.00	1.25″	0.700″	0.51	100	17.48	100	62.09	99.75	185.5
OP-D-3	2.00	**PE-D-3**	1.00	**TE-D-3**	1.00	1.25″	1.00″	0.72	320	71.77	200	180	309.97	595.2
OP-E-1	2.00	**PE-E-1**	2.00	**TE-E-1**	2.00	1.5″	0.500″	0.31	20	3.85	20	14.57	22.55	41.16
OP-E-2	2.00	**PE-E-2**	2.00	**TE-E-2**	2.00	1.5″	0.800″	0.50	100	22.73	100	80.82	129.68	241.5
OP-E-3	2.00	**PE-E-3**	2.00	**TE-E-3**	2.00	1.5″	1.100″	0.68	320	83.95	200	212.18	363.93	697.39
OP-F-1	3.00	**PE-F-1**	2.00	**TE-F-1**	2.00	2″	0.600″	0.29	20	5.52	20	20.92	32.38	59.13
OP-F-2	3.00	**PE-F-2**	2.00	**TE-F-2**	2.00	2″	1.000″	0.48	100	35.34	100	125.74	202.03	375.8
OP-F-3	3.00	**PE-F-3**	2.00	**TE-F-3**	2.00	2″	1.450″	0.70	320	147.74	200	372.09	639.87	1227.63
OP-G-1	4.00	**PE-G-1**	2.00	**TE-G-1**	2.00	2.5″	0.750″	0.30	20	8.63	20	32.71	50.64	92.48
OP-G-2	4.00	**PE-G-2**	2.00	**TE-G-2**	2.00	2.5″	1.250″	0.50	100	55.54	100	197.54	317.58	590.91
OP-G-3	4.00	**PE-G-3**	2.00	**TE-G-3**	2.00	2.5″	1.750″	0.70	320	216.30	200	543.99	936.56	1798.86
OP-H-1	5.00	**PE-H-1**	2.00	**TE-H-1**	2.00	3″	0.920″	0.30	20	12.97	20	49.17	76.13	139.06
OP-H-2	5.00	**PE-H-2**	2.00	**TE-H-2**	2.00	3″	1.500″	0.49	100	79.94	100	282.9	454.77	846.21
OP-H-3	5.00	**PE-H-3**	2.00	**TE-H-3**	2.00	3″	2.150″	0.70	320	324.16	200	816.7	1404.95	2696.28
OP-J-1	7.00	**PE-J-1**	3.00	**TE-J-1**	3.00	4″	1.200″	0.30	20	22.03	20	83.58	129.44	236.48
OP-J-2	7.00	**PE-J-2**	3.00	**TE-J-2**	3.00	4″	2.000″	0.50	100	141.51	100	503.76	810.06	1507.64
OP-J-3	7.00	**PE-J-3**	3.00	**TE-J-3**	3.00	4″	2.800″	0.70	320	547.11	200	1380.03	2373.02	4553.68
OP-K-1	8.00	**PE-K-1**	3.00	**TE-K-1**	4.00	5″	1.500″	0.30	20	34.39	20	130.48	202.11	369.29
OP-K-2	8.00	**PE-K-2**	3.00	**TE-K-2**	4.00	5″	2.500″	0.50	100	220.80	100	786.23	1264.42	2353.51
OP-K-3	8.00	**PE-K-3**	3.00	**TE-K-3**	4.00	5″	3.500″	0.69	320	853.09	200	2152.83	3701.57	7103.22
OP-L-1	10.00	**PE-L-1**	4.00	**TE-L-1**	4.00	6″	1.800″	0.30	20	49.46	20	187.86	291	531.75
OP-L-2	10.00	**PE-L-2**	4.00	**TE-L-2**	4.00	6″	3.000″	0.49	100	317.74	100	1331.63	1820.05	3387.93
OP-L-3	10.00	**PE-L-3**	4.00	**TE-L-3**	4.00	6″	4.200″	0.69	320	1226.98	200	3097.20	5325.20	10219.28
OP-M-1	14.00	**PE-M-1**	5.00	**TE-M-1**	6.00	8″	2.400″	0.30	20	87.95	20	333.87	517.25	945.28
OP-M-2	14.00	**PE-M-2**	5.00	**TE-M-2**	6.00	8″	4.000″	0.50	100	565.77	100	2014.95	3241.45	6034.85
OP-M-3	14.00	**PE-M-3**	5.00	**TE-M-3**	6.00	8″	5.600″	0.70	320	2195.86	200	5532.00	9525.43	18290.00
OP-N-1	20.00	**PE-N-1**	6.00	**TE-N-1**	8.00	10″	3.000″	0.30	20	137.35	20	521.58	808	1476.77
OP-N-2	20.00	**PE-N-2**	6.00	**TE-N-2**	8.00	10″	5.000″	0.50	100	883.04	100	3145.50	5060.38	9421.74
OP-N-3	20.00	**PE-N-3**	6.00	**TE-N-3**	8.00	10″	7.000″	0.70	320	3421.26	200	8626.42	14846.80	28506.17
OP-O-1	30.00	**PE-O-1**	7.00	**TE-O-1**	10.00	12″	3.600″	0.30	20	197.73	20	750.9	1163.44	2126.47
OP-O-2	30.00	**PE-O-2**	7.00	**TE-O-2**	10.00	12″	6.000″	0.50	100	1271.62	100	4530	7288.16	13570.33
OP-O-3	30.00	**PE-O-3**	7.00	**TE-O-3**	10.00	12″	8.400″	0.70	320	4930.86	200	12430.00	21397.00	41089.02
OP-P-1	40.00	**PE-P-1**	9.00	**TE-P-1**	15.00	14″	4.000″	0.30	20	244.14	20	927.14	1436.59	2625.81
OP-P-2	40.00	**PE-P-2**	9.00	**TE-P-2**	15.00	14″	6.600″	0.50	100	1537.49	100	6477.67	8812.87	16409.42
OP-P-3	40.00	**PE-P-3**	9.00	**TE-P-3**	15.00	14″	9.300″	0.70	320	6052.57	200	15251.50	28262.66	50427.78
OP-Q-1	48.00	**PE-Q-1**	10.00	**TE-Q-1**	18.00	16″	4.500″	0.30	20	308.76	20	1172.63	1817.05	3321.32
OP-Q-2	48.00	**PE-Q-2**	10.00	**TE-Q-2**	18.00	16″	7.600″	0.50	100	2038.95	100	7264.58	11688.26	21764.08
OP-Q-3	48.00	**PE-Q-3**	10.00	**TE-Q-3**	18.00	16″	10.700″	0.70	320	8007.74	200	20179.85	34749.32	66737.64

Note: Differential pressure values should be less than 50% of the inlet absolute pressure.

Dwyer

SERIES DTFW & DTFA

VARIABLE-AREA FLOWMETERS

In-Line Mounting, Gas, Liquids and Oils

DTFW

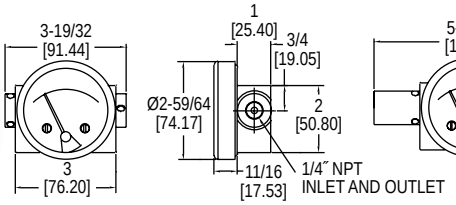

1/4″ NPT connection

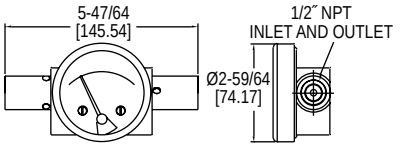

1/2″ NPT connection

DTFA

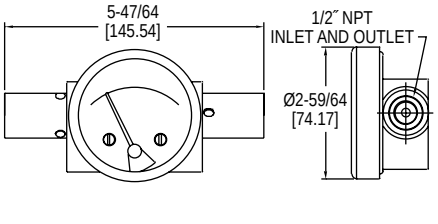

1/2″ NPT process connection

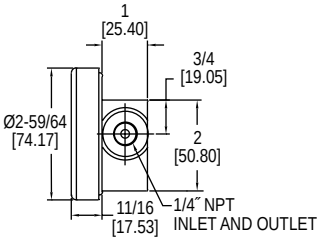

1/4″ NPT connection

The **Series DTFW Variable-Area Flowmeters** for Liquids and Oils measure water or oil flow rates with ± 2% of full-scale accuracy at a competitive price. Available in 1/4″, 1/2″ and 1″ connections for a wide variety of applications and comes calibrated for horizontal in line mounting.

The **Series DTFA Variable-Area Flowmeters** for Gases measures gas flow rates with ±5% of full-scale accuracy at an affordable price. Available in either 1/4″ or 1/2″ NPT connections and comes pre-calibrated for horizontal in-line mounting.

BENEFITS/FEATURES
- Durable metal construction ensures great reliability and the strength to withstand system pressures of up to 3000 psig (200 bar).
- Shatter proof construction, unlike glass tube variable area flowmeters, yields long operation life
- Preform precisely in high temperature, high vibration, shock-prone environments

APPLICATIONS
- Monitoring pressure drop across filters or strainers
- Flow scale based on differential pressure
- Liquid level given pressure differential between bottom and top of tank
- Hydraulic equipment
- Oil and gas equipment
- Heat exchangers
- Backflow prevention

SPECIFICATIONS

Service: DTFW: Compatible liquids; DTFA: Compatible gases.
Wetted Materials: Body: 316 SS, brass or aluminum; Spring: 302 SS or PTFE-coated; Range spring: 302 SS; Magnet: PTFE-coated; Metering cone: Acetal or PTFE; Seals: Buna.
Temperature Limits: -40 to 200°F (-40 to 93°C).
Pressure Limit: DTFW-3S: 1500 psig (100 bar); All other DTFW models: 3000 psig (200 bar); DTFA: 3000 psig (200 bar).
Accuracy: Liquid/oil calibration: ±2% FS; Air calibration: ±5% FS.
Repeatability: ±1% FS.
Size: Diameter dial face 2.5″ (63.5 mm).
Process Connection: See model chart.
Weight: DTFW-1B and 1S: 3 lb (1.36 kg); DTFW-2B and 2S: 5 lb (2.27 kg); DTFW-3S: 10 lb (4.54 kg); DTFA-1A: 3 lb (1.36 kg); DTFA-2A: 5 lb (2.27 kg).

MODEL CHART

Model	Range GPM Water	Connection NPT	Body	Metering Cone	Model	Range GPM Water	Connection NPT	Body	Metering Cone
DTFW-1B-1W	0 to 1	1/4″	Brass	Acetal	**DTFW-2B-8W**	0 to 8	1/2″	Brass	Acetal
DTFW-1B-2W	0 to 2	1/4″	Brass	Acetal	**DTFW-2B-10W**	0 to 10	1/2″	Brass	Acetal
DTFW-1B-3W	0 to 3	1/4″	Brass	Acetal	**DTFW-2S-1W**	0 to 1	1/2″	SS	Acetal
DTFW-1B-4W	0 to 4	1/4″	Brass	Acetal	**DTFW-2S-2W**	0 to 2	1/2″	SS	Acetal
DTFW-1B-5W	0 to 5	1/4″	Brass	Acetal	**DTFW-2S-3W**	0 to 3	1/2″	SS	Acetal
DTFW-1S-1W	0 to 1	1/4″	SS	Acetal	**DTFW-2S-4W**	0 to 4	1/2″	SS	Acetal
DTFW-1S-2W	0 to 2	1/4″	SS	Acetal	**DTFW-2S-5W**	0 to 5	1/2″	SS	Acetal
DTFW-1S-3W	0 to 3	1/4″	SS	Acetal	**DTFW-2S-8W**	0 to 8	1/2″	SS	Acetal
DTFW-1S-4W	0 to 4	1/4″	SS	Acetal	**DTFW-2S-10W**	0 to 10	1/2″	SS	Acetal
DTFW-1S-5W	0 to 5	1/4″	SS	Acetal	**DTFW-3S-10W**	0 to 10	1″	SS	PTFE
DTFW-2B-1W	0 to 1	1/2″	Brass	Acetal	**DTFW-3S-15W**	0 to 15	1″	SS	PTFE
DTFW-2B-2W	0 to 2	1/2″	Brass	Acetal	**DTFW-3S-20W**	0 to 20	1″	SS	PTFE
DTFW-2B-3W	0 to 3	1/2″	Brass	Acetal	**DTFW-3S-25W**	0 to 25	1″	SS	PTFE
DTFW-2B-4W	0 to 4	1/2″	Brass	Acetal	**DTFW-3S-30W**	0 to 30	1″	SS	PTFE
DTFW-2B-5W	0 to 5	1/2″	Brass	Acetal					

Note: Not available in 1/4″ or 1/2″ SS.

MODEL CHART

Model	Range, SCFM	Body	Connection
DTFA-1A-10A	1.5 to 10	Aluminum	1/4″ NPT
DTFA-1A-15A	2.0 to 15	Aluminum	1/4″ NPT
DTFA-1A-20A	3.0 to 20	Aluminum	1/4″ NPT
DTFA-1A-25A	3.0 to 25	Aluminum	1/4″ NPT
DTFA-2A-30A	3.0 to 30	Aluminum	1/2″ NPT
DTFA-2A-40A	4.0 to 40	Aluminum	1/2″ NPT
DTFA-2A-50A	4.0 to 50	Aluminum	1/2″ NPT
DTFA-2A-75A	5.0 to 75	Aluminum	1/2″ NPT
DTFA-2A-100A	10.0 to 100	Aluminum	1/2″ NPT

USA: California Proposition 65
⚠**WARNING:** This product can expose you to chemicals including Lead, which is known to the State of California to cause cancer and birth defects or other reproductive harm. For more information go to www.P65Warnings.ca.gov.

Dwyer

SERIES 500

SIGHT WINDOW

Shows Level or Contents of Tanks, Pipelines; Tempered, Replaceable Glass Window

Replaceable window

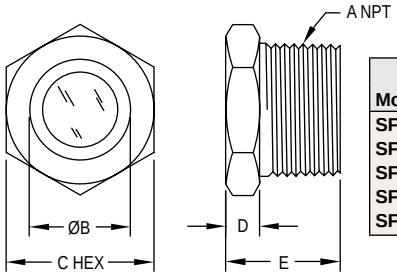

Model	Dimensions — Inches (mm)				
	A	B	C	D	E
SFI-500-3/4	3/4	3/4 [19]	1-3/8 [35]	45/64 [18]	1-3/8 [35]
SFI-500-1	1	15/16 [24]	1-3/8 [35]	45/64 [18]	1-3/8 [35]
SFI-500-1-1/4	1-1/4	1-1/4 [32]	2-1/8 [54]	27/32 [22]	1-9/16 [40]
SFI-500-1-1/2	1-1/2	1-27/64 [37]	2-1/8 [54]	27/32 [22]	1-9/16 [40]
SFI-500-2	2	1-1/4 [32]	2-1/2 [64]	15/32 [12]	1-21/32 [42]

The **Series 500 Sight Window** is a series of standard tempered glass with brass body sight windows which display level or contents of tanks or pipelines. In addition to the standard brass body, the Series 500 Sight windows are also available in carbon steel or 316 SS.

BENEFITS/FEATURES
- Tough, tempered glass window resists chemical attach and abrasion
- Seamless, replaceable gasket assures perfect seal
- Field replaceable glass window
- Range of wetted materials to suit a wide range of chemical compatibility

APPLICATIONS
- Hydraulic tanks
- Pressure vessels
- Coolant tanks
- Hydraulic lines
- Oil reservoirs

SPECIFICATIONS

Service: Compatible gases and liquids.
Wetted Materials: Window: Tempered glass; Body: Brass, carbon steel, or 316 SS; Gasket: Buna-N on brass and carbon steel body, PTFE on 316 SS body.
Temperature Limit: 200°F (93°C).
Pressure Limit: 125 psig (8.6 bar).
Connections: 3/4″ to 2″ male NPT.
Compliance: Meets the technical requirements of EU Directive 2011/65/EU (RoHS II).

MODEL CHART

316 SS Model	Brass Model	Carbon Steel Model
SFI-500SS-3/4	SFI-500B-3/4	SFI-500CS-3/4
SFI-500SS-1	SFI-500B-1	SFI-500CS-1
SFI-500SS-1-1/4	SFI-500B-1-1/4	SFI-500CS-1-1/4
SFI-500SS-1-1/2	SFI-500B-1-1/2	SFI-500CS-1-1/2
SFI-500SS-2	SFI-500B-2	SFI-500CS-2

USA: California Proposition 65
⚠**WARNING:** This product can expose you to chemicals including Lead, which is known to the State of California to cause cancer and birth defects or other reproductive harm. For more information go to www.P65Warnings.ca.gov.

SERIES 550

SIGHT WINDOW

Shows Level or Contents of Tanks, Pipelines; Fused Glass and Steel Construction

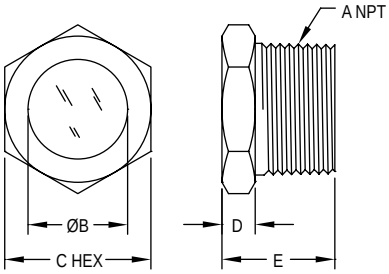

Model	Dimensions — Inches (mm)				
	A	B	C	D	E
SFI-550-1/4	1/4	11/32 [8.73]	5/8]15.95]	3/16 [4.76]	5/8 [15.95]
SFI-550-3/8	3/8	7/16 [11.11]	3/4 [19.05]	7/32 [5.56]	23/32 [18.26]
SFI-550-1/2	1/2	9/16 [14.29]	15/16 [23.81]	7/32 [5.56]	25/32 [19.84]
SFI-550-3/4	3/4	3/4 [19.05]	1-1/16 [26.99]	5/16 [7.94]	15/16 [23.81]
SFI-550-1	1	15/16 [23.81]	1-3/8 [34.93]	5/16 [7.94]	1-1/16 [26.99]
SFI-550-1-1/4	1-1/4	1-3/16 [30.18]	1-3/4 [44.45]	13/32 [10.32]	1-7/32 [30.96]
SFI-550-1-1/2	1-1/2	1-7/16 [36.53]	2 [50.80]	13/32 [10.32]	1-7/32 [30.96]
SFI-550-2	2	1-7/8 [47.63]	2-1/2 [63.50]	13/32 [10.32]	1-9/32 [32.54]

The **Series 550 Sight Window** is a range of glass with plated steel body sight windows which display level or contents of tanks or pipelines. Connections are standard NPT in sizes ranging from 1/4 to 2″.

BENEFITS/FEATURES
- Glass to metal bond for utmost reliability
- Plated steel bodies have convenient hex wrench surfaces for easy installation
- Windows are clear, ripple free, and flush with the front face, with no recess on which dirt might collect

APPLICATIONS
- Hydraulic tanks
- Pressure vessels
- Coolant tanks
- Hydraulic lines
- Oil reservoirs

SPECIFICATIONS

Service: Compatible gases and liquids.
Wetted Materials: Window: Glass; Body: Plated steel.
Temperature Limit: 200°F (93°C).
Pressure Limit: 125 psig (8.6 bar).
Connections: 1/4″ to 2″ male NPT.

MODEL CHART

Model	Model
SFI-550-1/4	SFI-550-1
SFI-550-3/8	SFI-550-1-1/4
SFI-550-1/2	SFI-550-1-1/2
SFI-550-3/4	SFI-550-2

Dwyer

SERIES SFI-100, SFI-300, SFI-300F, SFI-400 & SFI-700

MIDWEST SIGHT FLOW INDICATORS

Inexpensive Protection for Expensive Equipment and Systems

Model 100, 100MP ++

Model 300, 300MP ++

Model 360F

Model 400

Model 700 ++

The **Series SFI Midwest Sight Flow Indicator** is a Series of sight indicators which display flow or contents of pipelines. Available in window viewing style in the SFI-100 and SFI-300 Series and tube viewing style in the SFI-400 and SFI-700 Series with connection choices of female NPT, BSPP or BSPT threaded and flanged.

Series SFI-100 & SFI-300 Midwest Sight Flow Indicator offers threaded process connections, viewing windows, and bodies of brass or 316 SS. The SFI-100 type has a single window with a rotating impeller, the 300 type has a double window with a rotating impeller, the SFI-350 type has a double window with no moving indicator, and the SFI-360 type has a double window with a flapper.

Series SFI-300F Midwest Sight Flow Indicator offers ANSI flange process connections, double viewing windows, and bodies of carbon steel or 316 SS. The SFI-350F type has a double window with no moving indicator and the SFI-360F type has a double window with a flapper.

Series SFI-400 Midwest Sight Flow Indicator offers threaded or ANSI flanged process connections, tube style viewing, and bodies of cast iron or 316 SS.

Series SFI-700 Midwest Sight Flow Indicator offers threaded process connections, tube style viewing, and bodies of brass or 316 SS.

BENEFITS/FEATURES

- Manufactured of quality materials and safety tested to assure long, dependable service at economical prices
- All Series SFI-100, SFI-300 and SFI-300F feature a removable window for easy service and replacement of wearing parts
- The Series SFI-400 features glass tube construction offering easy flow viewing from any angle
- Series SFI-700 offers an easy to see bright red Acetal rotating impeller that is easy to view from any angle with the glass tube construction
- Maintenance is simple for the Series SFI-700 with internal wipers which restore full 360° visibility by simply rotating the glass tube without disrupting the flow

APPLICATIONS

- Hydraulic tanks
- Pressure vessels
- Coolant tanks
- Hydraulic lines
- Oil reservoirs

SPECIFICATIONS

SFI-100 & SFI-300 SPECIFICATIONS
Service: Compatible gases and liquids.
Wetted Materials: Window: Tempered glass; Body: Bronze or 316 SS; Gasket: Buna-N, fluoroelastomer or PTFE; Indicator: ABS or 316 SS impeller (100 and 300), 304 SS or 316 SS flapper (360).
Temperature Limit: 200°F (93°C); 120°F (48°C) on W2 option; 170°F (77°C) on I1 option.
Pressure Limit: 125 psig (8.62 bar), 150 psig (10.34 bar) on "MP" models.
Connections: Threaded.
Mounting Orientation: Horizontal or vertical; 360: Horizontal only.

SFI-300F SPECIFICATIONS
Service: Compatible gases and liquids.
Wetted Materials: Window: Tempered glass; Body: Carbon steel or 316 SS; Gasket: Buna-N, fluoroelastomer or PTFE; Indicator: 316 SS flapper (360).
Temperature Limit: 200°F (93°C).
Pressure Limit: 150 psig (10.34 bar).
Connections: Flanged.
Mounting Orientation: Horizontal or vertical; 360: Horizontal only.

SFI-400 SPECIFICATIONS
Service: Compatible gases and liquids.
Wetted Materials: Tube: Borosilicate; Body: Cast iron or 316 SS; Gasket: PTFE.
Temperature Limit: 200°F (93°C).
Pressure Limit: 50 psig (3.45 bar).
Connections: Threaded or flanged.

SFI-700 SPECIFICATIONS
Service: Compatible gases and liquids.
Wetted Materials: Tube: Tempered borosilicate; Body: Brass or 316 SS; Gasket: Fluoroelastomer; Indicator: Acetal.
Temperature Limit: 212°F (100°C).
Pressure Limit: 230 psig (15.86 bar).
Connections: Threaded.

MODEL CHART

Model	Description
SFI-100	Single window with impeller
SFI-300	Double window with impeller
SFI-350	Double window with no indicator
SFI-360	Double window with flapper
SFI-400	Tube type with no indicator
SFI-700	Tube type with impeller and internal wipers to clean glass tube

DIMENSIONS AND WEIGHT

Model	Body Size	Length	Depth	Height	Flange Diameter	Viewing Area Diameter	Weight lb (kg)
SFI-100	1/4, 3/8	3.000 (76)	1.813 (46)	2.125 (54)	-	-	1.1 (0.5)
	1/2, 3/4	4.000 (102)	2.250 (57)	2.563 (65)	-	-	1.5 (0.7)
	1, 1-1/4	4.375 (111)	2.563 (65)	2.625 (67)	-	-	2.7 (1.2)
	1-1/2, 2	5.688 (144)	3.250 (83)	3.625 (83)	-	-	5.5 (2.5)
SFI-300	1/4, 3/8	3.063 (78)	2.250 (57)	2.125 (54)	-	-	1.7 (0.8)
	1/2, 3/4	4.063 (103)	2.750 (70)	2.563 (65)	-	-	2.6 (1.2)
	1, 1-1/4	4.375 (111)	3.125 (79)	2.563 (65)	-	-	3.0 (1.4)
	1-1/2, 2	5.500 (140)	3.688 (93)	4.063 (103)	-	-	7.0 (3.2)
SFI-700	1/4, 3/8	2.750 (70)	-	1.500 (38)	-	-	0.9 (0.4)
	1/2, 3/4	3.688 (94)	-	2.250 (57)	-	-	2.4 (1.1)
	1, 1-1/4, 1-1/2	4.875 (124)	-	2.750 (70) (across flats)	-	-	5.1 (2.3)
SFI-400	1/2	4.500 (144)	-	-	3.500 (89)	1.500 (38)	3.8 (1.7)
	3/4	5.125 (130)	-	-	3.875 (98)	1.750 (44)	4.8 (2.2)
	1	5.625 (143)	-	-	4.250 (108)	2.000 (51)	6.2 (2.8)
	1-1/4	5.750 (146)	-	-	4.625 (117)	2.000 (51)	7.6 (3.5)
	1-1/2	5.875 (149)	-	-	5.000 (127)	2.500 (64)	8.7 (4.0)
	2	6.125 (156)	-	-	6.000 (152)	3.000 (76)	13 (6.0)
	3	6.250 (159)	-	-	7.500 (191)	4.000 (102)	17 (7.7)
	4	6.250 (159)	-	-	9.00 (229)	5.000 (127)	25 (11.0)
SFI-400F	1	5.000 (127)	-	-	4.250 (108)	2.000 (51)	7 (3.2)
	1-1/4	5.125 (130)	-	-	4.625 (117)	2.000 (51)	8 (3.6)
	1-1/2	5.250 (133)	-	-	5.000 (127)	2.500 (64)	12 (5.5)
	2	5.370 (137)	-	-	6.000 (152)	3.000 (76)	14 (6.4)
	3	5.750 (146)	-	-	7.500 (191)	4.000 (102)	23 (10.4)
	4	5.750 (146)	-	-	9.000 (229)	5.000 (127)	31 (14.1)
SFI-300F	1-1/2	6.375 (162)	-	-	5.000 (127)	2.313 (58)	12 (5.5)
	2	6.500 (165)	-	-	6.000 (152)	2.313 (58)	16 (7.5)
	3	8.875 (225)	-	-	7.500 (191)	3.000 (76)	38 (17)
	4	10.250 (260)	-	-	9.000 (229)	4.000 (102)	56 (25)
	6	12.500 (318)	-	-	11.000 (279)	6.000 (152)	120 (55)

Note: Dimensions are in inches (mm).

++ USA: California Proposition 65
⚠**WARNING:** This product can expose you to chemicals including Lead, which is known to the State of California to cause cancer and birth defects or other reproductive harm. For more information go to www.P65Warnings.ca.gov.

MIDWEST SIGHT FLOW INDICATORS

Inexpensive Protection for Expensive Equipment and Systems

MODEL CHART						
SFI-100 & SFI-300 - WINDOW STYLE WITH THREADED CONNECTIONS						
Example	**SFI**	**-300**	**SS**	**-2**	**-G2**	**SFI-300SS-2-G2**
Model Designator	SFI					Sight flow indicator
Body Style		100 300 350 360				Single window, bronze body, ABS impeller Double window, bronze body, ABS impeller Double window, bronze body, no moving indicator Double window, bronze body, 304 SS flapper
Body Options			SS MP			316 SS body option for 300, 350, 360 150 psig maximum pressure option, includes fluoroelastomer gaskets
Body Size				1/4 3/8 1/2 3/4 1 1-1/4 1-1/2 2		1/4 inch connection size 3/8 inch connection size 1/2 inch connection size 3/4 inch connection size 1 inch connection size 1-1/4 inch connection size 1-1/2 inch connection size 2 inch connection size
Options					W2 G1 G2 S2 S3 I1 I2 I3 F1 BSPT BSPP	Plexiglass window PTFE gasket Fluoroelastomer gasket 316 SS shaft (not on 350 model) Monel shaft (not on 350 model) ABS impeller with bronze bushing (not on 350, 360) 316 SS impeller (not on 350, 360) No impeller (100 only) 316 SS flapper (360 only) BSPT threads BSPP threads
Note: Maximum flow on impeller models: 5 FPS with liquids, 5000 FPM with gases.						

MODEL CHART					
SFI-300F - WINDOW STYLE WITH FLANGED CONNECTIONS					
Example	**SFI**	**-360FSS**	**-1-1/2**	**-G1**	**SFI-360FSS-1-1/2-G1**
Model Designator	SFI				Sight flow indicator
Body Style		350FCS 350FSS 360FCS 360FSS			Carbon steel body, no moving indicator 316 SS body, no moving 316 SS indicator Carbon steel body, 316 SS flapper 316 SS body, 316 SS flapper
Body Size			1-1/2 2 3 4 6		1-1/2 inch raised face flange connection size 2 inch raised face flange connection size 3 inch raised face flange connection size 4 inch raised face flange connection size 6 inch raised face flange connection size
Options				G1 G2	PTFE gasket Fluoroelastomer gasket

MODEL CHART					
SFI-700 - TUBE STYLE WITH THREADED CONNECTIONS					
Example	**SFI**	**-700SS**	**-1-1/2**	**-BSPT**	**SFI-700SS-1-1/2-BSPT**
Model Designator	SFI				Sight flow indicator
Body Style		700 700SS			Brass body 316 SS body
Body Size			1/4 3/8 1/2 3/4 1 1-1/4 1-1/2		1/4 inch female NPT connection size 3/8 inch female NPT connection size 1/2 inch female NPT connection size 3/4 inch female NPT connection size 1 inch female NPT connection size 1-1/4 inch female NPT connection size 1-1/2 inch female NPT connection size
Options				BSPT BSPP	BSPT threads BSPP threads

MODEL CHART				
SFI-400 - TUBE STYLE WITH THREADED OR FLANGED CONNECTIONS				
Example	**SFI**	**-400SS**	**-1-1/2**	**SFI-400SS-1-1/2**
Model Designator	SFI			Sight flow indicator
Body Style		400CI 400SS 400F		Female NPT connections, cast iron body (only for 1 through 2 inch sizes) Female NPT connections, 316 SS body Raised face flange connection, 316 SS body (only for 1 inch and up sizes)
Body Size			1/2 3/4 1 1-1/4 1-1/2 2 3 4	1/2 inch connection size 3/4 inch connection size 1 inch connection size 1-1/4 inch connection size 1-1/2 inch connection size 2 inch connection size 3 inch connection size 4 inch connection size
Note: Best for use in vertical pipelines where there are no mechanical strains.				

USA: California Proposition 65
⚠**WARNING:** This product can expose you to chemicals including Lead, which is known to the State of California to cause cancer and birth defects or other reproductive harm. For more information go to www.P65Warnings.ca.gov.

Dwyer
SERIES V4

FLOTECT® VANE OPERATED FLOW SWITCH

Field Adjustable — Dependable Protection Against Flow Variation or Stopping in Pipelines for Fluids, Gases and Flowing Solids

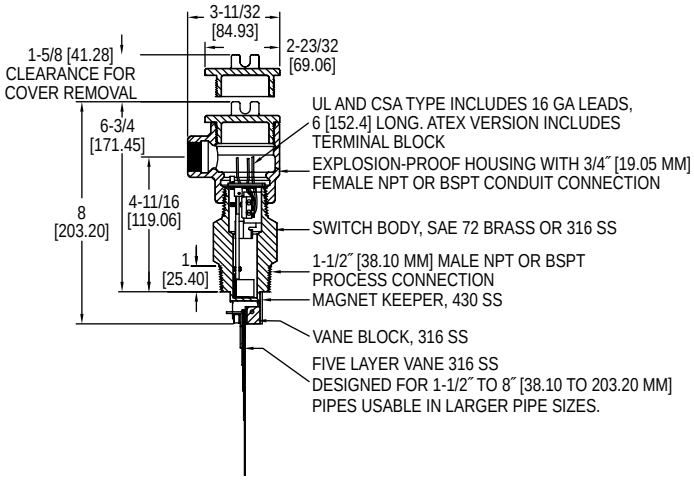

The **Series V4 Flotect® Vane Operated Flow Switch** is rugged and reliable, ideal for automatically protecting equipment and pipeline systems against damage from reduction or loss of flow. Time tested in thousands of pipeline installations and processing plants around the world this Series is Weatherproof, designed to meet NEMA 4 and Explosion-proof (listing included in specifications). This series can be used in pipes 1-1/2″ (38.10 mm) and up.

BENEFITS/FEATURES

- Superior performance with unique magnetically-actuated switching design
- Increased product life due to free-swinging vane, which attracts a magnet within the solid metal switch body and actuates a snap switch by means of a simple lever arm with no bellows, springs, or seals to fail
- Meets application requirements with durable leak-proof body machined from bar stock
- Save time and money on maintenance with electrical assembly that can be easily replaced without removing the unit from installation so that the process does not have to be shut down
- Quick installation with fitting that installs directly and easily into pipeline with a threadolet, tee, or flange (see application drawings)
- Meets the most demanding applications with high pressure rating of 1000 psig (69 bar) for the brass body and 2000 psig (138 bar) for the SS body
- Solves customer flow application needs with choice of custom vane calibrated specifically for your application, Model V4, or field adjustable multilayer vane, Model V4-2-U (see set point chart)

APPLICATIONS

- Protects pumps, motors and other equipment against low or no flow
- Controls sequential operation of pumps
- Automatically starts auxiliary pumps and engines
- Stops liquid cooled engines, machines and processing when coolant flow is interrupted
- Shuts down burner when air flow through heating coil fails
- Controls dampers according to flow

SPECIFICATIONS

Service: Gases or liquids compatible with wetted materials.
Wetted Materials: Vane: 316 SS; Body: Brass or 316 SS standard; Magnet keeper: 430 SS standard, 316 SS optional; Options: Other materials also available, consult factory (e.g. PVC, hastelloy, nickel, monel, titanium).
Temperature Limit: -4 to 275°F (-20 to 135°C) standard, MT high temperature option 400°F (205°C) [MT option not UL, CSA, ATEX or IECEx] ATEX and IECEx options, ambient temperature -4 to 163°F (-20 to 73°C); Process temperature -4 to 163°F (-20 to 73°C).
Pressure Limit: Brass body 1000 psig (69 bar), 316 SS body 2000 psig (138 bar), optional 5000 psig (345 bar) available with 316 SS body and SPDT switch only.
Enclosure Rating: Weatherproof and Explosion-proof. **Listed with UL and CSA for Class I, Groups C and D; Class II, Groups E, F, and G.
ATEX CE 2813 Ex II 2 G Ex db IIB T6 Gb -20°C≤Tamb≤73°C.
-20°C≤Process Temp≤73°C.
EU-Type Certificate No.: KEMA 03 ATEX 2383.
ATEX Standards: EN 60079-0:2012+A11:2013; EN 60079-1:2014.
IECEx Certified: For Ex db IIB T6 Gb -20°C≤Tamb≤73°C. -20°C≤Process Temp≤73°C.
IECEx Certificate of Conformity: IECEx DEK 11.0071.
IECEx Standards: IEC 60079-0:2011; IEC 60079-1:2014.
Zone I. Also FM approved.
Switch Type: SPDT snap switch standard, DPDT snap switch optional.
Electrical Rating: UL, FM, ATEX and IECEx models 10 A @ 125/250 VAC (V~). CSA models: 5 A @ 125/250 VAC (V~); 5 A res., 3 A ind. @ 30 VDC (V⎓). MV option: 1 A @125 VAC (V~); 1 A res., .5 A ind. @ 30 VDC (V⎓). MT option: 5 A @ 125/250 VAC (V~). [MT and MV option not UL, CSA, FM, ATEX or IECEx].
Electrical Connections: UL and CSA models: 16 AWG, 6″ (152 mm) long. ATEX and IECEx unit: Terminal block.
Conduit Connection: 3/4″ female NPT or 19.05 mm standard or M25 with -BSPT option.
Process Connection: 1-1/2″ male NPT or 1-1/2″ male BSPT or 38.10 mm.
Mounting Orientation: Within 5° of vertical for proper operation. Units for horizontal installation (vertical pipe with up flow) available.
Set Point Adjustment: For universal vane: five vane combinations.
Weight: 4 lb 8 oz (1.9 kg).
Compliance: ATEX, CE, CSA, FM, IECEx, UL**.

**No housing option (-NH) has no approvals.

MODEL CHART

Model	Description	Connection Type
V4-2-U	Brass body, universal vane	NPT
V4-SS-2-U	316 SS* body, universal vane	NPT
V4-2-U-NH**	Brass body, universal vane, no housing	NPT
V4	Brass body, custom vane	NPT
V4-SS	316 SS* body, custom vane	NPT
V4-NH**	Brass body, custom vane, no housing	NPT
V4-2-U-BSPT	Brass body, universal vane	BSPT
V4-SS-2-U-BSPT	316 SS* body, universal vane	BSPT
V4-BSPT	Brass body, custom vane	BSPT
V4-SS-BSPT	316 SS* body, custom vane	BSPT

*316 SS body with 430 SS magnet keeper.
**No housing option (-NH) has no approvals.
†When both values are supplied, note which is critical.

Note: Consult factory for price and availability of fittings for V4 installation. Thredolets, bushings, and tees are available in a variety of sizes and materials.
Note: For custom vane models, please supply factory with following information: pipe size, flow direction (horizontal, up), mounting, pressure, temperature, specific gravity, flow rates (maximum normal, actuation/deactuation†), etc.

OPTIONS

To order add suffix:	Description
-316	316 SS magnet keeper, option to replace standard 430 SS
-AT	ATEX compliant construction
-BSPT	Female BSPT process connection and M25 conduit connection
-D	DPDT contacts
-IEC	IECEx certified construction
-MT	High temperature, option rated 400°F (204°C)*
-MV	Gold plated contacts, options for dry circuits*
-TRD	Decreasing flow time delay relay option with 2 SPDT contacts, adjustable from 0-1 to 0-31 minutes*
-TRI	Increasing flow time delay relay option with 2 SPDT contacts, adjustable from 0-1 to 0-31 minutes*
-V	Vertical up flow, option for upward flow in vertical pipe

*See electrical rating in specification, no listings or approvals.

USA: California Proposition 65
WARNING: This product can expose you to chemicals including Lead, which is known to the State of California to cause cancer and birth defects or other reproductive harm. For more information go to www.P65Warnings.ca.gov.

FLOTECT® VANE OPERATED FLOW SWITCH

Field Adjustable — Dependable Protection Against Flow Variation or Stopping in Pipelines for Fluids, Gases and Flowing Solids

V4 UNIVERSAL VANE FLOW CHARTS

Values shown in both charts are nominal. If normal flows exceed actuation rates by less than 10%, custom vanes are recommended.
Figures are based on standard vertical installation in a 1-1/2" threaded branch connection in a horizontal run of pipe.

APPROXIMATE ACTUATION/DEACTUATION FLOW RATES FOR COLD WATER; GPM (LPM)

Vane Layers	1.5˝ Pipe	2˝ Pipe	3˝ Pipe	4˝ Pipe	6˝ Pipe	8˝ Pipe	10˝ Pipe	12˝ Pipe	14˝ Pipe	16˝ Pipe	18˝ Pipe	20˝ Pipe
1	7-3 (26.67-11.67)	15-8 (56.7-30)	45-22 (167-83.3)	95-40 (367-150)	210-120 (800-450)	375-175 (1417-667)	600-300 (2267-1133)	900-450 (3400-1700)	1200-600 (4550-2267)	1400-800 (5300-3033)	2000-1000 (7567-3783)	2400-1200 (9083-4550)
1 and 2		7-4 (26.7-15)	23-14 (86.7-53.3)	50-35 (190-132)	130-90 (500-333)	230-150 (867-567)	450-250 (1700-950)	650-350 (2467-1317)	900-500 (3400-1900)	1200-650 (4550-2467)	1450-800 (5483-3033)	1800-1000 (6817-3783)
1, 2 and 3			11-7 (41.7-26.7)	27-19 (102-71.7)	80-60 (300-233)	160-115 (600-433)	300-180 (1133-683)	450-275 (1700-1033)	600-350 (2267-1317)	750-450 (2750-2083)	1000-600 (3783-2267)	1200-700 (4550-2650)
1, 2, 3 and 4				17-12 (65-45)	60-45 (233-167)	120-90 (450-333)	230-150 (867-567)	310-200 (1167-750)	430-280 (1633-1067)	550-360 (2083-1367)	700-450 (2650-1700)	850-550 (3217-2083)
1, 2, 3, 4 and 5					40-30 (152-113)	80-65 (300-250)	135-100 (517-383)	200-140 (750-533)	290-200 (1100-750)	360-250 (1367-950)	460-325 (1733-1233)	575-400 (2183-1517)

Note: Actuation rates are based on cold water at a specific gravity of 1.0.
Note: For fluids of different specific gravity, actuation rates may be approximated by dividing the rate shown by the square root of the specific gravity.

APPROXIMATE ACTUATION/DEACTUATION FLOW RATES FOR COLD AIR; SCFM (LPS)

Vane Layers	1.5˝ Pipe	2˝ Pipe	3˝ Pipe	4˝ Pipe	6˝ Pipe	8˝ Pipe	10˝ Pipe	12˝ Pipe	14˝ Pipe	16˝ Pipe	18˝ Pipe	20˝ Pipe
1	32-17 (15-8)	65-32 (30-20)	210-105 (100-50)	400-200 (190-90)	950-475 (450-220)	1550-850 (730-400)	2400-1300 (1100-600)	3450-1900 (1600-900)	4700-2600 (2200-1200)	6400-3500 (3000-1700)	8000-4400 (3800-2100)	10000-5500 (4700-2600)
1 and 2		23-13 (10-6)	120-70 (60-30)	195-140 (90-70)	550-375 (260-180)	1100-700 (520-330)	1850-1200 (870-570)	2700-1750 (1300-800)	3400-2200 (1600-1000)	4800-3100 (2300-1500)	6000-3900 (2800-1800)	7400-4800 (3500-2300)
1, 2 and 3			60-48 (30-20)	135-100 (60-50)	375-265 (180-130)	725-500 (340-240)	1200-850 (570-400)	1850-1300 (870-610)	2600-1800 (1200-800)	3350-2350 (1600-1100)	4300-3000 (2000-1400)	5300-3700 (2500-1700)
1, 2, 3 and 4				65-50 (30-20)	260-200 (120-90)	500-400 (240-190)	875-700 (410-330)	1250-1000 (590-470)	1900-1500 (900-710)	2500-2000 (1200-900)	3100-2500 (1500-1200)	3900-3100 (1800-1500)
1, 2, 3, 4 and 5					130-100 (60-50)	310-250 (150-120)	650-525 (310-250)	1000-800 (470-380)	1600-1250 (760-590)	2200-1750 (1040-830)	2800-2250 (1300-1100)	3550-2850 (1700-1300)

Note: Actuation rates are based on air at standard conditions.
Note: For gases at other pressures, temperatures, or specific gravities, consult factory for equivalent flow approximations.

APPLICATION DRAWINGS
FOR FLOTECT® AUTOMATIC FLOW SWITCHES

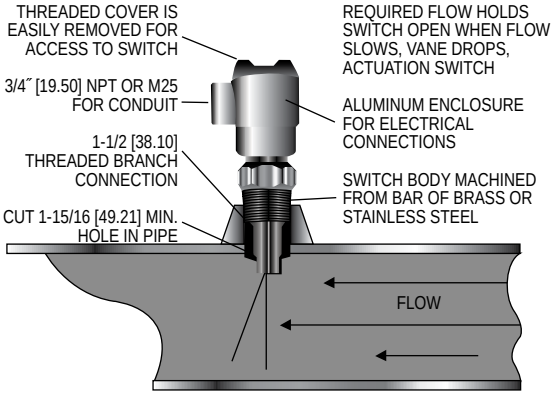

Threaded branch connection installation.
May also be installed using tee, flange or coupling.

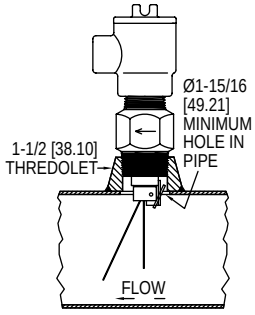

Standard installation

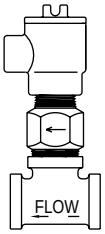

1-1/2˝ x 1-1/2˝x 1-1/2˝ (38.10 x 38.10 x 38.10 mm) tee installation

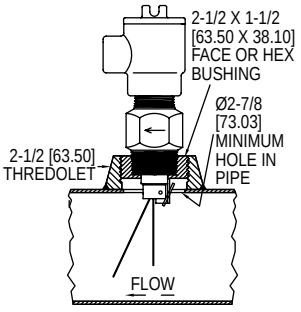

2-1/2˝ (63.50 mm) threaded branch connection

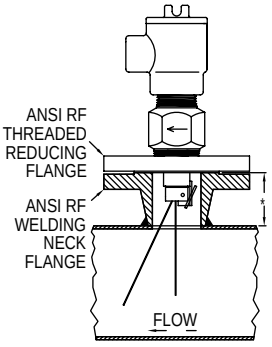

Flange installation
*Flange face to pipe O.D. specified by customer. Normally should not exceed 5˝ (172)

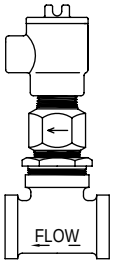

2˝ x 2˝ x 2˝ (50.80 x 50.80 x 50.80 mm) tee installation

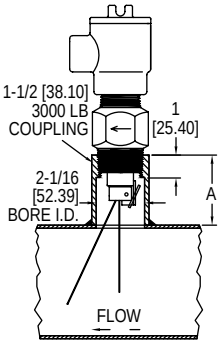

Not recommended, unless coupling is bored out to 2-1/16˝ (52.4) as shown

Pipe Size	Dim. A
2˝ (50.80 mm)	2-5/8 (66.7)
3˝ (76.20 mm)	2-1/2 (63.5)
4˝ (101.60 mm)	2-7/16 (61.9)

USA: California Proposition 65
WARNING: This product can expose you to chemicals including Lead, which is known to the State of California to cause cancer and birth defects or other reproductive harm. For more information go to www.P65Warnings.ca.gov.

Dwyer
SERIES V6

FLOTECT® MINI-SIZE FLOW SWITCHES

Monitor Flow in 1/2″ to 2″ (12.70 to 50.80 mm) Pipe, Explosion-Proof, Compact

V6 with tee

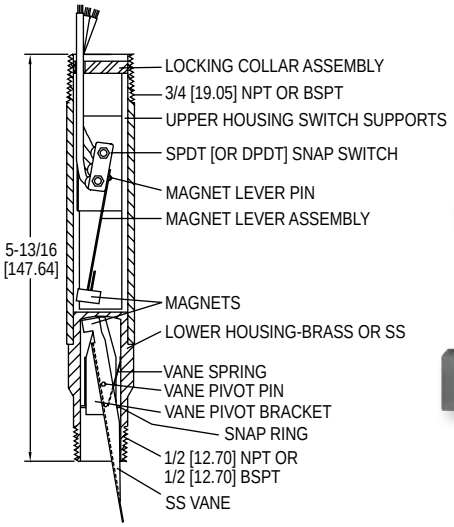

V6 low flow

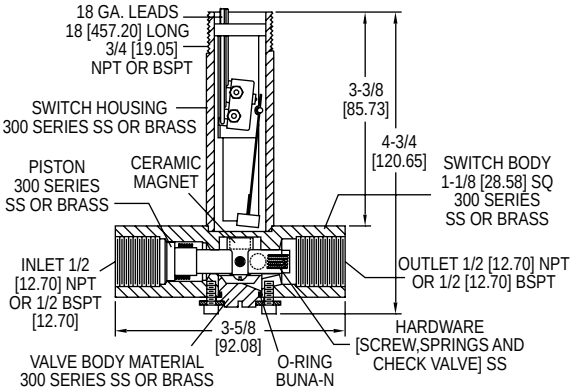

VIDEO ONLINE

The **Series V6 Flotect® Mini-Size Flow Switches** are surprisingly compact, and specifically engineered to monitor liquid, gas, or air flows. Time tested in thousands of pipeline installations and processing plants around the world, this Series is Weatherproof, designed to meet NEMA 4 and Explosion-proof (listing included in specifications). Tees are available for installation in pipelines from 1/2″ to 2″ (12.70 to 50.80 mm). With bushings added the unit is easily adapted to 1/4″ and 3/8″ (6.35 and 9.53 mm) piping.

BENEFITS/FEATURES

- Superior performance with unique magnetically-actuated switch
- Increased product life due to free-swinging vane, which attracts a magnet within the solid metal switch body and actuates a snap switch by means of a simple lever arm with no bellows, springs, or seals to fail
- Meets application requirements with durable leak-proof body machined from bar stock
- Save time and money on maintenance with electrical assembly that can be easily replaced without removing the unit from installation so that the process does not have to be shut down
- Choice of models in a tee with calibrated vane or field adjustable trimmable vane
- Quick installation with fitting that installs directly and easily into pipeline with a threadolet, tee, or flange (see application drawings)
- Meets the most demanding applications with high pressure rating of 1000 psig (69 bar) for the brass body and 2000 psig (138 bar) for the SS body
- Solves customer level applications needs with low flow model with field adjustable set point

APPLICATIONS

- Protects pumps, motors and other equipment against low or no flow
- Controls sequential operation of pumps
- Automatically starts auxiliary pumps and engines
- Stops liquid cooled engines, machines and processing when coolant flow is interrupted
- Shuts down burner when air flow through heating coil fails
- Controls dampers according to flow
- Signals alarm when emergency shower or eyewash station in use

SPECIFICATIONS

Service: Gases or liquids compatible with wetted materials.
Wetted Materials: Standard V6 models: Vane: 301 SS; Lower body: brass or 303 SS; Magnet: Ceramic; Other: 301, 302 SS; Tee: Brass, iron, forged steel, or 304 SS. V6 low flow models: Lower body: Brass or 303 SS; Tee: Brass or 304 SS; Magnet: Ceramic; O-ring: Buna-N standard, Fluoroelastomer optional; Other: 301, 302 SS.
Temperature Limits: -4 to 220°F (-20 to 105°C) standard, MT high temperature option 400°F (205°C) (MT not UL, CSA, ATEX, IECEx or KC) ATEX Compliant AT, IECEx IEC option and KC (KC option); Ambient temperature: -4 to 167°F (-20 to 75°C); Process temperature: -4 to 220°F (-20 to 105°C).
Pressure Limit: Brass lower body with no tee models 1000 psig (69 bar), 303 SS lower body with no tee models 2000 psig (138 bar). Brass tee models 250 psi (17.2 bar), iron tee models 1000 psi (69 bar), forged and SS tee models 2000 psi (138 bar), low flow models 1450 psi (100 bar).
Enclosure Rating: Weatherproof and Explosion-proof. Listed with UL and CSA for Class I, Groups A, B, C and D; Class II, Groups E, F, and G. (Group A on SS body models only).
ATEX CE 2813 Ex II 2 G Ex db IIC T6 Gb Process Temp ≤75°C Alternate Temperature Class T5 Process Temp ≤90°C, 115°C (T4) Process Temp ≤105°C consult factory. EU-Type Certificate No.: KEMA 04ATEX2128.
ATEX Standards: EN 60079-0:2012+A11:2013; EN 60079-1:2014.
IECEx Certified: For Ex db IIC T6 Gb Process Temp≤75°C Alternate Temperature Class T5 Process Temp ≤90°C, 115°C (T4) Process Temp≤105°C consult factory.
IECEx Certificate of Conformity: IECEx DEK 11.0039;
IECEx Standards: IEC 60079-0:2011; IEC 60079-1:2014;
Korean Certified (KC) for: Ex d IIC T6 Gb Process Temp ≤75°C;
KTL Certificate Number: 12-KB4BO-0091.
Switch Type: SPDT snap switch standard, DPDT snap switch optional.
Electrical Rating: UL models: 5 A @125/250 VAC. CSA, ATEX and IECEx models: 5 A @ 125/250 VAC (V~); 5 A res., 3 A ind. @ 30 VDC (V⎓). MV option: .1 A @ 125 VAC (V~). MT option: 5 A @125/250 VAC (V~). [MT option not UL, CSA, ATEX or IECEx].
Electrical Connections: UL models: 18 AWG, 18″ (457.20 mm) long. ATEX/CSA / IECEx models: Terminal block.
Upper Body: Brass or 303 SS.
Conduit Connections: 3/4″ (19.05 mm) male NPT standard, 3/4″ (19.05 mm) female NPT or M25 with BSPT option on junction box models.
Process Connection: 1/2″ (12.70 mm) male NPT or 1/2″ (12.70 mm) male BSPT on models without a tee.
Mounting Orientation: Switch can be installed in any position but the actuation/deactuation flow rates in the charts are based on horizontal pipe runs and are nominal values.
Set Point Adjustment: Standard V6 models none. Without tee models vane is trimmable. Low flow models are field adjustable in the range shown. See set point charts❶.
Weight: 2 to 6 lb (.9 to 2.7 kg) depending on construction.
Options not Shown: Custom calibration, bushings, PVC tee, reinforced vane, DPDT relays.
Compliance: ATEX, CE, CSA, IECEx, KTL, UL.

USA: California Proposition 65
⚠**WARNING:** This product can expose you to chemicals including Lead, which is known to the State of California to cause cancer and birth defects or other reproductive harm. For more information go to www.P65Warnings.ca.gov.

❶**Set Point Charts: See page 273 (Series V6)**

FLOTECT® MINI-SIZE FLOW SWITCHES

Monitor Flow in 1/2″ to 2″ (12.70 to 50.80 mm) Pipe, Explosion-Proof, Compact

MODEL CHART									
Example	**V6**	**EP**	**B-B**	**-S**	**-2**		**-B**	**-MT**	**V6EPB-B-S-2-B-MT**
Series	V6								Flow switch
Construction		EP							Explosion proof
Body			B-B S-S						Brass SS
Circuit (Switch)				S D					SPDT DPDT
Tee Connection Size+					1 2 3 4 5 6 LF LF				1/2″ (12.70 mm) 3/4″ (19.50 mm) 1″ (25.40 mm) 1-1/4″ (31.75 mm) 1-1/2″ (38.10 mm) 2″ (50.80 mm) Low flow model (1/2″ connection-brass) Low flow model (1/2″ connection-SS)
Process Connection						- E			NPT BSPT
Tee Material+							MI FS B S 0		Iron Forged steel Brass SS No tee, field trimmable vane** (For LF model no tee material chosen, tee material matches body choice)
Options								AT CSA IEC MT MV VIT	ATEX compliant construction with junction box CSA approved construction with junction box* IECEx certified construction with junction box High temperature option rated 400°F (205°C) (see specifications for ratings)* Gold contacts on snap switch for dry circuits (see specifications for ratings) Fluoroelastomer O-rings in place of Buna-N on low flow models

*Options that do not have ATEX.
**Vane will be trimmed to the connection size. If full field trimmable vane is desired, must select with tee connection size 6.
+Additional adders dependent on tee connection size and tee material, consult factory for these adders.

Note: M25 is not available with the CSA housing.

MODEL CHART			
Model	**Size/Connection**	**Body**	**Tee**
V6EPB-B-S-1-B	1/2″ (12.70 mm) NPT	Brass	Brass
V6EPB-B-S-2-B	3/4″ (19.50 mm) NPT	Brass	Brass
V6EPB-B-S-3-B	1″ (25.40 mm) NPT	Brass	Brass
V6EPB-B-S-4-B	1-1/4″ (31.75 mm) NPT	Brass	Brass
V6EPB-B-S-5-B	1-1/2″ (38.10 mm) NPT	Brass	Brass
V6EPB-B-S-6-B	2″ (50.80 mm) NPT	Brass	Brass
V6EPB-B-S-1-MI	1/2″ (12.70 mm) NPT	Brass	Iron
V6EPB-B-S-2-MI	3/4″ (19.50 mm) NPT	Brass	Iron
V6EPB-B-S-3-MI	1″ (25.40 mm) NPT	Brass	Iron
V6EPB-B-S-4-MI	1-1/4″ (31.75 mm) NPT	Brass	Iron
V6EPB-B-S-5-MI	1-1/2″ (38.10 mm) NPT	Brass	Iron
V6EPB-B-S-6-MI	2″ (50.80 mm) NPT	Brass	Iron
V6EPS-S-S-1-FS	1/2″ (12.70 mm) NPT	SS	FS
V6EPS-S-S-2-FS	3/4″ (19.50 mm) NPT	SS	FS
V6EPS-S-S-3-FS	1″ (25.40 mm) NPT	SS	FS
V6EPS-S-S-4-FS	1-1/4″ (31.75 mm) NPT	SS	FS
V6EPS-S-S-5-FS	1-1/2″ (38.10 mm) NPT	SS	FS
V6EPS-S-S-6-FS	2″ (50.80 mm) NPT	SS	FS
V6EPS-S-S-1-S	1/2″ (12.70 mm) NPT	SS	SS
V6EPS-S-S-2-S	3/4″ (19.50 mm) NPT	SS	SS
V6EPS-S-S-3-S	1″ (25.40 mm) NPT	SS	SS
V6EPS-S-S-4-S	1-1/4″ (31.75 mm) NPT	SS	SS
V6EPS-S-S-5-S	1-1/2″ (38.10 mm) NPT	SS	SS
V6EPS-S-S-6-S	2″ (50.80 mm) NPT	SS	SS
V6EPB-B-S-6-0	No tee	Brass	None
V6EPS-S-S-6-0	No tee	SS	None
V6EPB-B-S-LF	1/2″ (12.70 mm) NPT	Brass	LF, brass
V6EPS-S-S-LF	1/2″ (12.70 mm) NPT	SS	LF, SS
V6EPB-B-S-LFE	1/2″ (12.70 mm) BSPT	Brass	Brass
V6EPB-B-S-1E-B	1/2″ (12.70 mm) BSPT	Brass	Brass
V6EPB-B-S-2E-B	3/4″ (19.50 mm) BSPT	Brass	Brass
V6EPB-B-S-3E-B	1″ (25.40 mm) BSPT	Brass	Brass
V6EPB-B-S-5E-B	1-1/2″ (38.10 mm) BSPT	Brass	Brass
V6EPB-B-S-6E-B	2″ (50.80 mm) BSPT	Brass	Brass
V6EPB-B-S-6E-0	No tee	Brass	Brass
V6EPS-S-S-LFE	1/2″ (12.70 mm) BSPT	SS	SS
V6EPS-S-S-1E-S	1/2″ (12.70 mm) BSPT	SS	SS
V6EPS-S-S-2E-S	3/4″ (19.50 mm) BSPT	SS	SS
V6EPS-S-S-3E-S	1″ (25.40 mm) BSPT	SS	SS
V6EPS-S-S-4E-S	1-1/4″ (31.75 mm) BSPT	SS	SS
V6EPS-S-S-5E-S	1-1/2″ (38.10 mm) BSPT	SS	SS
V6EPS-S-S-6E-S	2″ (50.80 mm) BSPT	SS	SS
V6EPS-S-S-6E-0	No tee	SS	SS

V6 SET POINT CHARTS - FACTORY INSTALLED TEE

APPROXIMATE ACTUATION/ DEACTUATION FLOW RATES FOR AIR; SCFM (LPM)		
Pipe Size	**Actuate**	**Deactuate**
1/2″	6.50 (180)	5.00 (120)
3/4″	10.0 (300)	8.00 (240)
1″	14.0 (420)	12.0 (360)
1-1/4″	21.0 (600)	18.0 (540)
1-1/2″	33.0 (960)	30.0 (840)
2″	43.0 (1200)	36.0 (1020)

APPROXIMATE ACTUATION/ DEACTUATION FLOW RATES FOR COLD WATER; GPM (LPM)		
Pipe Size	**Actuate**	**Deactuate**
1/2″	1.50 (5.667)	1.00 (3.83)
3/4″	2.00 (7.5)	1.25 (4.67)
1″	3.00 (11.33)	1.75 (6.67)
1-1/4″	4.00 (15.17)	3.00 (11.3)
1-1/2″	6.00 (22.67)	5.00 (18.9)
2″	10.00 (37.83)	8.50 (32.2)

V6 LOW FLOW SET POINT CHART

MIN-MAX FLOW RATES IN 1/2″ PIPE		
Media	**Actuate**	**Deactuate**
GPM-water	.04-0.75	.03-0.60
LPM-water	.15-2.84	.11-2.27
SCFM-air	.18-2.70	.15-2.0
LPS-air	.09-1.3	.07-.95

Note: Pressure drop (head loss) is a function of both set point and flow rate. Typically, pressure drop at actuation flow rate listed will be 5-10 psid (.34-.69 bar). Pressure drops at other flow rates will vary in proportion to the (change in flow).

USA: California Proposition 65
⚠**WARNING:** This product can expose you to chemicals including Lead, which is known to the State of California to cause cancer and birth defects or other reproductive harm. For more information go to www.P65Warnings.ca.gov.

Dwyer

SERIES V7

FLOTECT® VANE OPERATED FLOW SWITCH

Magnetic Linkage, UL Approved

Pipe Size	Dim. A	Pipe Size	Dim. A
1	1-17/64 [32.15]	2	2-11/64 [55.17]
1-1/4	1-19/32 [40.48]	3	2-11/64 [55.17]
1-1/2	1-53/64 [46.43]	4	2-11/64 [55.17]

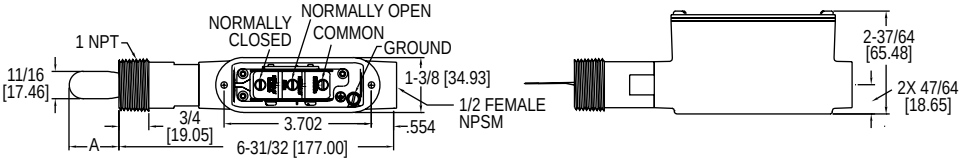

The **Series V7 Flotect® Vane Flow Switch** is an inexpensive range switch for use with compatible liquids to start or stop electronic operated equipment when flow or no-flow conditions occur. Design is standard weatherproof, meeting NEMA 4X.

BENEFITS/FEATURES
- Superior performance with magnetically-actuated switching design
- Increased product life due to free-swinging vane, which attracts a magnet within the solid metal switch body to actuate a snap switch by means of a simple lever arm with no bellows, springs, or seals to fail
- Meets application requirements with durable leak proof body machined from bar stock
- Long operating life with robust vane design which is rigid and field trimmable for set point adjustment

APPLICATIONS
- Proof of boiler flow
- Shuts down burner when air flow through heating coil fails
- Protects pumps, motors and other equipment against low or no flow
- Stops liquid cooled engines, machines and processing when coolant flow is interrupted

APPROXIMATE ACTUATION/DEACTUATION FLOW RATES FOR COLD WATER; GPM (LPM)

Pipe Size	Actuate	Deactuate
1″	7.5 (28.4)	6.8 (25.7)
1-1/4″	8.1 (30.8)	7.6 (28.9)
1-1/2″	11.7 (44.1)	10.9 (41.3)
2″	16.9 (64.0)	15.6 (59.1)
2-1/2″	19.6 (74.2)	18.1 (68.5)
3″	31.6 (120)	29.6 (112)
4″	58.0 (218)	52.0 (197)

Note: Contact the factory for different actuation-deactuation rates.

SPECIFICATIONS

Service: Liquids compatible with wetted materials that are non-coating and non-crystallizing.
Wetted Materials: Vane: 301 SS; Process connection: Brass or 316 SS; Magnet: Ceramic; Other: 301, 302 SS.
Upper Body Material: Die cast aluminum.
Temperature Limits: -40 to 250°F (-40 to 121°C).
Pressure Limits: 250 psi (17.2 bar).
Enclosure Rating: Weatherproof, meets NEMA 4X (IP66).
Switch Type: SPDT snap switch.
Electrical Rating: 10 A @ 125, 250, 480 VAC; 1/8 hp @ 125 VAC, 1/4 hp @ 250 VAC.
Electrical Connections: 3 screw type, common, normally open and normally closed.
Conduit Connection: 1/2″ NPSM.
Process Connection: 1″ male NPT. Contact factory for optional tees.
Pipe Size: 1″ to 4″.
Mounting Orientation: Horizontal or vertical (actuation flow rates are based on horizontal pipe runs in the vertical position). Will not work in vertical pipe with down flow.
Set Point Adjustment: Vane is trimmable, see set point chart.
Weight: 1 lb 2 oz (500 g).
Compliance: CE, UL.

MODEL CHART

Model	Body Material
V7-WBS-30N	Brass
V7-WSS-30N	316 SS

USA: California Proposition 65
WARNING: This product can expose you to chemicals including Lead, which is known to the State of California to cause cancer and birth defects or other reproductive harm. For more information go to www.P65Warnings.ca.gov.

SERIES V10

FLOTECT® MINI-SIZE FLOW SWITCH

Proof of Flow or No Flow in 1/2 to 2″ Pipe, Cost Effective, Leak Proof Body, Weatherproof

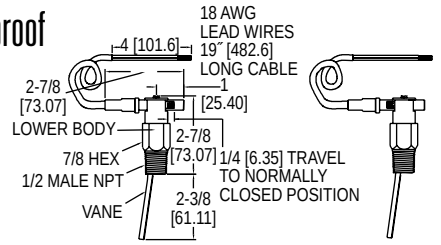

Normally open position **Normally closed position**

The **Series V10 Flotect® Mini-Size Flow Switch** is designed to provide inexpensive, reliable monitoring of the presence or absence of flow in a system. This series is available for field installation in pipelines from 1/2 to 2″ diameter and available in brass or 303 SS body.

BENEFITS/FEATURES
- Superior performance with rugged magnetically-actuated switching design and hermetically sealed reed switch
- Application flexibility with simple field switch adjustment allowing to toggle between normally open (NO) or normally closed (NC) with no change in the electrical connection
- Save time and money on maintenance with electrical assembly that can be easily replaced without removing the unit from installation so that the process does not have to be shut down
- Solves application needs with full size, field-trimmable stainless steel vane provided with removable template calibrated for brass or ductile iron reducing tees with forged steel straight tee/bushing combinations

APPLICATIONS
- Proving flow in boilers, hot water heaters, and chillers
- Protects pumps, motors and other equipment against low or no flow
- Automatically starts auxiliary pumps and engines

SPECIFICATIONS

Service: Compatible gases or liquids.
Wetted Materials: Vane: 301 SS; Body: Brass or 303 SS; Pin and magnet: Ceramic 8.
Temperature Limit: 200°F (93°C).
Pressure Limit: Brass body: 1000 psig (69 bar); 303 SS body: 2000 psig (138 bar).
Enclosure Rating: Weatherproof, meets NEMA 4X (IP66).
Switch Type: SPST hermetically sealed reed switch. Field adjustable for normally open or normally closed.
Electrical Rating: 0.5 A @ 120 VAC; 1.5 A @ 24 VDC res.; 0.001 A @ 200 VDC res.
Electrical Connections: 18 AWG, 19″ (483 mm) long, PVC jacket. Rated 221°F (105°C).
Process Connection: 1/2″ male NPT or 1/2″ male BSPT.
Mounting Orientation: Switch can be installed in any position but the actuation/deactuation flow rates are based on horizontal pipe runs and are nominal values.
Set Point Adjustment: Vane is trimmable.
Switch Enclosure: Nylon.
Weight: 5.5 oz (0.16 kg).
Compliance: CE, CSA, UR.

APPROXIMATE ACTUATION/DEACTUATION FLOW RATES FOR COLD WATER; GPM (LPM)

Pipe Size	Trim	N.O.	N.C.
1/2″	L	2.6/2.3 (9.8/8.7)	2.6/2.5 (9.8/9.5)
3/4″	J	3.1/2.7 (11.7/10.2)	3.1/2.8 (11.7/10.6)
1″	H	4.8/4.5 (18.2/17)	4.8/4.4 (18.2/16.7)
1-1/4″	E	6.2/5.6 (23.5/21.2)	6.1/5.6 (23.1/21.2)
1-1/2″	C	8.2/7.7 (31/29.1)	8.2/7.7 (31/29.1)
2″	Full	9.5/9.1 (36/34.4)	9.5/9 (36/34.1)

APPROXIMATE ACTUATION/DEACTUATION FLOW RATES FOR AIR; SCFM (LPM)

Pipe Size	Trim	N.O.	N.C.
1/2″	L	10.3/8.8 (291.7/250)	10.2/9.2 (288/260)
3/4″	J	13/11.6 (368.3/328)	12.9/11.6 (365/328)
1″	H	19.2/17.6 (543.3/498)	18.9/17.6 (535/498)
1-1/4″	E	24.8/22.2 (701.7/628)	24.5/22.5 (693/637)
1-1/2″	C	33.4/31.2 (946.7/883)	33/30.6 (935/867)
2″	Full	50.2/48.4 (1422/1370)	50.2/47.7 (1422/1352)

MODEL CHART

Model	Body Material	Connection Type	Switch Configuration
V10	Brass	NPT	Normally open or closed
V10SS	303 SS	NPT	Normally open or closed
V10-BSPT	Brass	BSPT	Normally open or closed
V10SS-BSPT	303 SS	BSPT	Normally open or closed

USA: California Proposition 65
WARNING: This product can expose you to chemicals including Lead, which is known to the State of California to cause cancer and birth defects or other reproductive harm. For more information go to www.P65Warnings.ca.gov.

FLOTECT® VANE OPERATED FLOW SWITCHES

Field Adjustable — 1 to 6 Inch Pipe, Leak Proof Body, Chemical Resistance

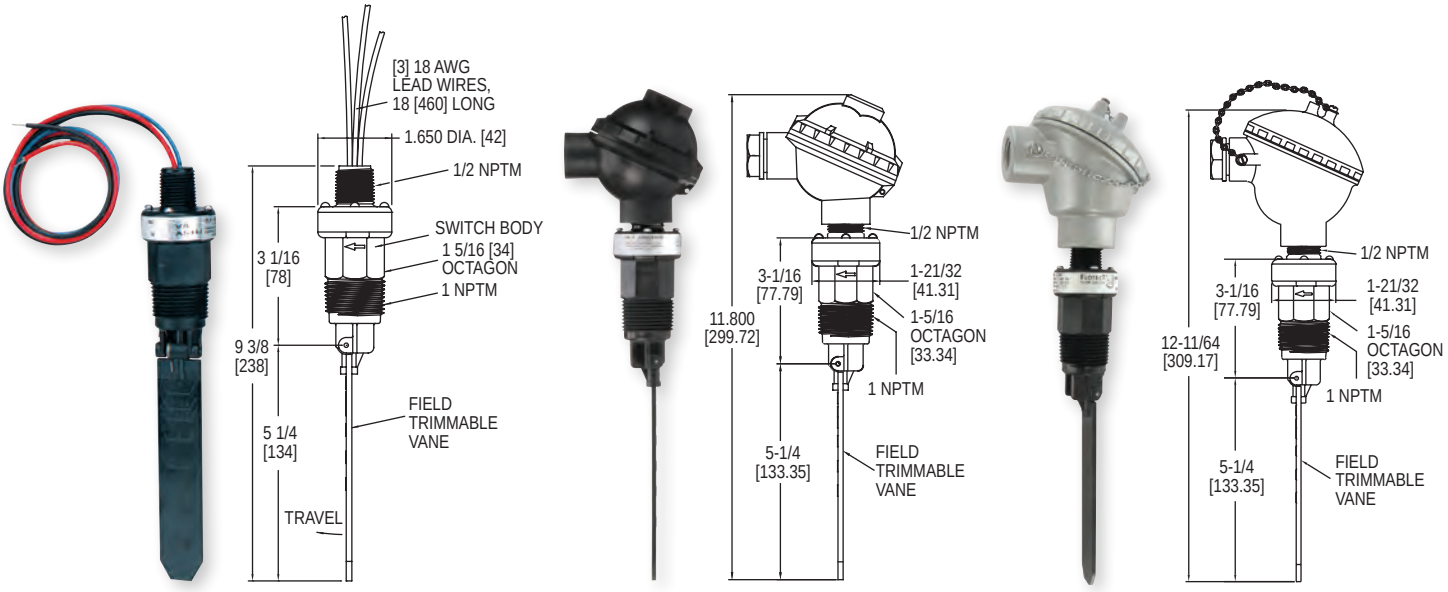

V8 **V8-WP** **V8-WP2**

The **Series V8 Flotect® Vane Operated Flow Switches** are ideal for protecting unattended equipment from damage or loss of production. This Series is available for installation in a 1 to 6″ pipe with operating pressures are up to 150 psig (10 bar) and temperatures to 212°F (100°C).

BENEFITS/FEATURES

- Suitable for mounting in a protected environment with UL recognition as an industrial motor controller per UL standard 508
- Increased product life with a free-swinging vane which attracts a magnet within the solid metal switch body, actuating a snap switch by means of a simple lever arm with no bellows, springs, or seals to fail
- Excellent chemical resistance and leak proof body and vane constructed of tough durable polyphenylene sulfide
- Solves application needs with full size trimmable vane is provided with molded-in graduations

APPLICATIONS

- Chemical processing
- Air conditioning
- Refrigeration
- Heating systems
- Cooling lines
- Machinery
- Liquid transfer systems
- Water treatment
- Food processing
- Machine tools

APPROXIMATE ACTUATION/ DEACTUATION FLOW RATES FOR COLD WATER; GPM (LPM)	
Pipe Size	**Actuate/Deactuate**
1″	10.8/9.1 (40.9/34.6)
1-1/4″	9.8/8.3 (37.2/31.4)
1-1/2″	8.6/6.8 (32.4/25.7)
2″	10.9/8.8 (41.2/33.4)
3″	12.9/8.9 (48.8/33.5)
4″	21.1/13.8 (79.7/52.2)
6″	45/33 (170.2/124.7)

APPROXIMATE ACTUATION/ DEACTUATION FLOW RATES FOR AIR; SCFM (LPM)	
Pipe Size	**Actuate/Deactuate**
1″	39/32.6 (1105/923)
1-1/4″	37.5/32.2 (1062/912)
1-1/2″	33.4/26.7 (945/757)
2″	43/36.8 (1218/1042)
3″	52.7/38.9 (1493/1100)
4″	87.6/63.6 (2482/1802)
6″	168.6/137.4 (4775/3890)

SPECIFICATIONS

Service: Compatible gases or liquids.
Wetted Materials: Vane and body: Polyphenylene Sulfide (PPS); Pin and spring: 316 SS or Inconel®; Magnet: Ceramic 8.
Temperature Limit: 212°F (100°C).
Pressure Limit: 150 psig (10.34 bar).
Enclosure Rating: General purpose, WP/WP2 option is weatherproof.
Switch Type: SPDT snap switch, MV option: SPDT gold contact snap switch.
Electrical Rating: 5 A @ 125/250 VAC, 5 A resistive, 3 A inductive @ 30 VDC; MV option: 1 A @ 125 VAC, 1 A resistive, 0.5 A inductive @ 30 VDC.
Electrical Connections: 18 AWG, 18″ (460 mm) long.
Conduit Connection: 1/2″ male NPT, 1/2″ female NPT on WP and WP2.
Process Connection: 1″ male NPT.
Mounting Orientation: Actuation/deactuation flow rates are based on horizontal pipe runs and are nominal values. Unit cannot be used with vertical down flow.
Set Point Adjustment: Vane is trimmable.
Weight: 4.5 oz (0.13 kg).
Agency Approvals: CE, cURus.

MODEL CHART	
Model	**Description**
V8	Flow switch

OPTIONS	
To order add suffix:	**Description**
-INC	Inconel® alloy option; Inconel® alloy replaces standard 316 SS wetted parts; wetted parts are Inconel® alloy, ceramic 8, and polyphenylene sulfide
-MV	Gold plated contacts, for dry circuits; rated 1A @ 125 VAC; 1A resistive, 0.5A inductive @ 30 VDC
-WP	Weatherproof enclosure; optional housing is phenylpolioxide and provides weatherproof protection for electrical wiring; not UL approved
-WP2	Optional housing is aluminum and provides weatherproof protection for electrical wiring; not UL approved
Example: V8-INC	

Inconel® is a registered trademark of Huntington Alloys Corporation

Dwyer

SERIES FS-2

VANE FLOW SWITCH

Low Cost, Field Adjustable Set Point and Paddle

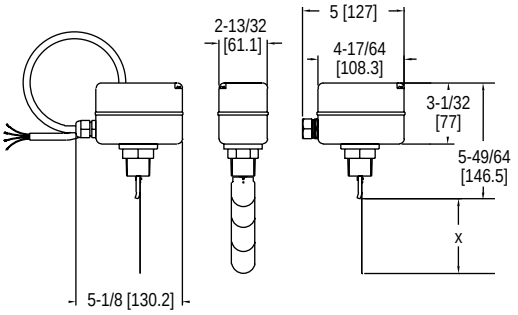

Shown with conduit connection option

The **Series FS-2 Vane Flow Switch** offers an economical flow proving solution. The FS-2 paddles are adjustable to fit 1 to 8″ size pipe.

BENEFITS/FEATURES

- Field adjustable set point adjustment screw allows for easy flow switch modification
- Custom application set points enabled by field adjustable vane layers
- Aluminum weatherproof housing permits outdoor installation

APPLICATIONS

- Boiler flow proving
- Hot water heaters
- Chillers
- Cooling lines
- Machinery
- Liquid transfer systems

SPECIFICATIONS

Service: Compatible liquids.
Wetted Materials: Bellow: Tin-bronze; Vane: SS; Body: Forged brass.
Temperature Limit: 230°F (110°C).
Pressure Limit: 145 psig (10 bar).
Enclosure Rating: NEMA 4 (IP64).
Switch Type: SPDT snap switch.
Electrical Rating: 10 A res, 3 A ind @ 250 VAC.
Electrical Connection: Cable gland with attached wire leads or optional conduit connection.
Process Connection: 1″ male NPT or BSPT.
Mounting Orientation: Switch must be installed vertically on horizontal pipe runs.
Set Point Adjustment: Four vane combinations and an adjustment screw.
Enclosure: Die-cast aluminum alloy.
Weight: 28.22 oz (0.8 kg).
Compliance: CE.

APPROXIMATE ACTUATION/DEACTUATION FLOW RATES FOR WATER; GPM (LPM)

Pipe Size	Blade Vane Length in (mm) Dim. X	Minimum Setting Actuate	Minimum Setting Deactuate	Maximum Setting Actuate	Maximum Setting Deactuate
1″	1.34 (34)	4.0 (15.0)	1.8 (6.7)	8.8 (33.3)	6.6 (25.0)
1-1/4″	1.34 (34)	5.3 (20.0)	2.6 (10.0)	11.4 (43.3)	8.4 (31.7)
1-1/2″	2.24 (57)	7.0 (26.7)	4.0 (15.0)	14.5 (55.0)	11.4 (43.3)
2″	2.24 (57)	14.1 (53.3)	9.7 (36.7)	31.3 (118.3)	22.5 (85.0)
2-1/2″	3.46 (88)	18.5 (70.0)	15.4 (58.3)	35.2 (133.3)	30.8 (116.7)
3″	3.46 (88)	27.7 (105.0)	25.1 (95.0)	52.8 (200.0)	46.2 (175.0)
4″	3.46 (88)	59.4 (225.0)	52.8 (200.0)	123.3 (466.7)	114.5 (433.3)
5″	6.57 (167)	52.8 (200.0)	39.6 (150.0)	132.1 (500.0)	123.3 (466.7)
6″	6.57 (167)	75.7 (286.7)	52.8 (200.0)	154.1 (583.3)	140.9 (533.3)
8″	6.57 (167)	184.9 (700.0)	158.5 (600.0)	396.3 (1500.0)	374.2 (1416.7)

MODEL CHART

Model	Description
FS-2	Paddle flow switch

OPTIONS

To order add suffix:	Description
-BSPT	Process connection
Example: FS-2-BSPT	
-CND	Conduit connection, 1″ NPT female conduit connection with no wire leads
Example: FS-2-CND	

USA: California Proposition 65
WARNING: This product can expose you to chemicals including Lead, which is known to the State of California to cause cancer and birth defects or other reproductive harm. For more information go to www.P65Warnings.ca.gov.

Dwyer

SERIES TDFS2

THERMAL DISPERSION FLOW SWITCH

Non-Mechanical, Low Pressure Drop, Large Pipe Sizes

TDFS2-1-P-06

TDFS2-2-P-06

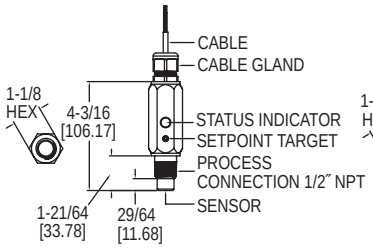

TDFS2-1-P-06

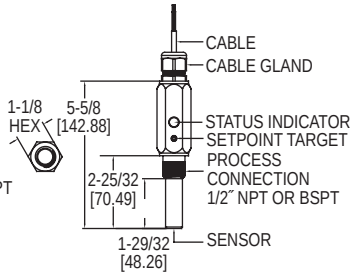

TDFS2-2-P-06

The **Series TDFS2 Thermal Dispersion Flow Switch** is a thermal flow switch that indicates whether the flow rate is above or below a user set flow rate. The unit incorporates two LED status indicators providing visual switch indication. The set flow rate (setpoint) is easily field adjustable with included magnet and the unit has both NO and NC NPN outputs.

BENEFITS/FEATURES
- Better reliability and life expectancy than mechanical flow switches with no paddles or vanes to wear or break, no jams in the paddle movement, and no seals on movement assembly to wear or leak
- Long operation life, as it is not affected by empty pipe by avoiding overheating with heating above the process temperature and then cooling down to process temperature
- Lower system run cost due to low pressure drop with 10% insertion into the flow (e.g. 1/8″ for 3/4″ schedule 40 pipe)

APPLICATIONS
- Boiler flow proving
- Hot water heaters
- Chillers
- Liquid transfer systems

SPECIFICATIONS

Service: Compatible water-based fluids.
Wetted Materials: 316 SS.
Pipe Range: 1/2 to 1-1/2″ (15 to 40 mm) or 2 to 10″ (50 to 250 mm) (model selectable).
Setpoint Range: 0.5 to 10 ft/s (0.15 to 3.0 m/s).
Repeatability: 0.07 ft/s (0.02 m/s) +3% of setpoint.
Typical Deadband: 0.1 ft/s (0.03 m/s) +15% of setpoint.
Temperature Limits: Ambient: 5 to 140°F (-15 to 60°C); Process: 5 to 140°F (-15 to 60°C), Storage: -40 to 185°F (-40 to 85°C).
Pressure Limits: 300 psig (20.67 bar).
Response Time: Approximately 8 s.
Power Requirement: 9-24 VDC.
Switching Current: 400 mA, derate 5 mA/°C above 23°C.
Current Consumption: Average: 93 mA; Peak: 300 mA.
Electrical Connection: 1/2″ NPT female or cable gland with 4 conductor 22 AWG 6′ (1.83 m) long (model selectable).
Process Connection: 1/2″ NPT or BSPT male (model selectable).
Enclosure Rating: NEMA 4X (IP65).
Housing Materials: 316 SS, 416 SS, polycarbonate, neoprene, and acrylated urethane.
Switch Type: 1 NO NPN, 1 NC NPN.
Input Power and Protection: 0.5A fuse (resettable) reverse polarity protected.
Switched Output Protection: 0.5A fuse (resettable) reverse polarity protected.
Agency Approvals: CE.

MODEL CHART

Example	TDFS2	-1	-C	-06	-BSPT	TDFS2-1-C-06-BSPT
Series	TDFS2					Thermal dispersion flow switch
Pipe Size		1 2				1/2 to 1-1/2″ (15 to 40 mm) 2 to 10″ (50 to 250 mm)
Electrical Connection*			C B P			1/2″ female NPT with PVC cable for conduit connection Cable gland with burial rated cable Cable gland with PVC jacketed cable
Cable Length				X		Cable length (ft.)
Options					BSPT	1/2″ BSPT process connection

*Per ft cable length adder.

MODEL TDFT

THERMAL DISPERSION FLOW TRANSMITTER

Non-Mechanical, Low Pressure Drop

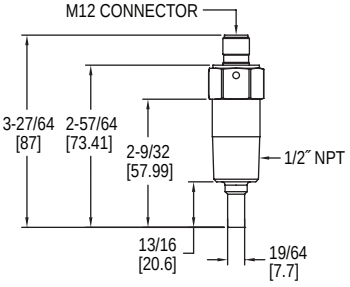

The **Model TDFT Thermal Dispersion Flow Transmitter** has continuous frequency output. It fits applications with pipe sizes from 1/2″ to 2″ (12.7 to 50 mm) and features 316L stainless steel housing for use in harsh environments.

BENEFITS/FEATURES
- Flow measurement in low flow applications
- Continuous frequency signal from measured flow velocity
- Low pressure drop
- No moving parts

APPLICATIONS
- Chiller systems
- Boiler systems
- Liquid transfer systems

SPECIFICATIONS

Service: Compatible water-based fluids.
Wetted Materials: 316L SS.
Range: 1-3 ft/s (0.05-0.7 m/s).
Repeatability: ±10% at 68°F (20°C).
Temperature Limits: Ambient: -4 to 158°F (-20 to 70°C); Process: 14 to 140°F (-10 to 60°C); Storage: -40 to 158°F (-40 to 70°C).
Pressure Limit: 362 psi (25 bar).
Response Time: 1 to 10 s.
Power Requirements: 24 VDC.
Current Consumption: <50 mA.
Electrical Rating: 80 mA.
Output Frequency: 5 to 74 Hz.
Electrical Connections: 1 x M12.
Process Connection: 1/2″ NPT.
Enclosure Rating: IP67.
Housing Material: 316L SS.
Mounting Orientations: Horizontal or vertical.
Weight: 0.274 lb (124.5 g).
Agency Approvals: CE, cULus.

MODEL CHART

Model	Description
TDFT	Thermal dispersion flow transmitter

ACCESSORIES

Model	Description
A-TDFT-CBL-15	15′ (5 m) M12 cable

Dwyer

SERIES HFO

IN-LINE FLOW ALARM

Latching Alarm Capabilities, For Air, Water or Caustic Fluids, Unrestricted Mounting

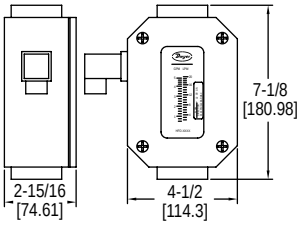

The **Series HFO In-Line Flow Alarm** provides continuous monitoring and control of flow rate levels. The flow alarm can be configured to open or close a contact for an increasing or decreasing set point. Available in 1/4˝, 1/2˝, 1˝ or 1-1/2˝ female NPT process connections, in aluminum, brass or 304 SS body.

BENEFITS/FEATURES
- Provides two 10 A SPDT limit switches with field adjustable alarm settings for application control and integral direct reading scale provides local indication of flow rate
- Increased application versatility with no inlet or outlet straight plumbing requirement and can be mounted horizontally, vertically, or inverted
- Outdoor or harsh environment installation capable with rugged cast aluminum construction and NEMA 4X (IP65) enclosure

APPLICATIONS
- Waste water processing
- Lubrication systems
- Process control
- Solar systems
- Drain lines
- Pump testing

MODEL CHART - DUAL SCALE RANGE

Model	Connection Size	Range, Air: SCFM, SLPS	Body Material
HFO-21112	1/4˝ female NPT	2 to 12, 1 to 5.5	Aluminum
HFO-21123	1/4˝ female NPT	4 to 23, 2 to 10	Aluminum

SPECIFICATIONS

Service: Compatible gases or liquids.
Wetted Materials: Body: Aluminum, brass or 304 SS; Seals: Buna-N or fluoroelastomer; Magnet: PTFE coated Alnico; Other internal parts: 304 SS.
Viscosity: 500 SSU.
Temperature Limits: 170°F (76°C).
Pressure Limits: Aluminum body: 600 psig (41 bar); Brass body: 3500 psig (240 bar); 304 SS body: 6000 psig (413 bar).
Enclosure Rating: NEMA 4X (IP66).
Accuracy: ±2% FS.
Repeatability: ±1% of FS.
Switch Type: SPDT, 10 A @ 250 VAC; 0.5 A @ 125 VDC, (resistive).
Shipping Weight: 1/4 to 1/2˝ female NPT models: 3 lb (1.4 kg); 3/4 to 1˝ female NPT models: 4.5 lb (2.0 kg); 1-1/2˝ female NPT models: 12 lb (5.4 kg).

MODEL CHART

Model	Connection Size	Range, Water: GPM, LPM	Body Material
HFO-22205	1/2˝ female NPT	0.5 to 5.0, 2 to 19	Brass
HFO-22315	3/4˝ female NPT	1 to 15, 5 to 55	Brass
HFO-22320	3/4˝ female NPT	2 to 20, 10 to 74	Brass
HFO-22440	1˝ female NPT	4 to 40, 20 to 150	Brass
HFO-22550	1-1/2˝ female NPT	6 to 50, 20 to 190	Brass
HFO-23202	1/2˝ female NPT	.2 to 2, 1 to 8	304 SS
HFO-23210	1/2˝ female NPT	1 to 10, 3 to 37.5	304 SS

USA: California Proposition 65
⚠**WARNING:** This product can expose you to chemicals including Lead, which is known to the State of California to cause cancer and birth defects or other reproductive harm. For more information go to www.P65Warnings.ca.gov.

SERIES HFT

IN-LINE FLOW TRANSMITTER

Local Flow Indication, Unrestricted Mounting, 4-20 mA, 0-5 V, and 1-5 V Output

CALIBRATION SERVICES AVAILABLE

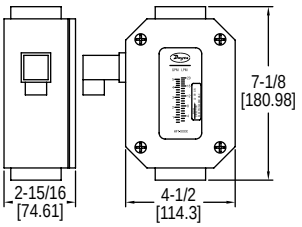

The **Series HFT In-Line Flow Transmitter** provides continuous monitoring of flow rate levels via a direct reading in-line flowmeter with electronics to provide proportional 4-20 mA, 0-5 and 1-5 VDC analog outputs.

BENEFITS/FEATURES
- Provides analog output to monitor application flow and integral direct reading scale to provide local indication of flow rate
- Increased application versatility with no inlet or outlet straight plumbing requirement and can be mounted horizontally, vertically, or inverted
- Outdoor or harsh environment installation capable with rugged cast aluminum construction and NEMA 4X (IP65) enclosure

APPLICATIONS
- Waste water processing
- Lubrication systems
- Process control
- Solar systems
- Drain lines
- Pump testing
- Drive data acquisition devices, meters or analog input cards

MODEL CHART - DUAL SCALE RANGE

Model	Connection Size	Range, Air: SCFM, SLPS	Body Material
HFT-1112	1/4˝ female NPT	2 to 12, 1 to 5.5	Aluminum
HFT-1123	1/4˝ female NPT	4 to 23, 2 to 10	Aluminum

SPECIFICATIONS

Service: Compatible gases or liquids.
Wetted Materials: Body: Aluminum, brass or 304 SS; Seals: Buna-N or Fluoroelastomer; Magnet: PTFE coated Alnico; Other internal parts: 304 SS.
Viscosity: 500 SSU.
Temperature Limits: 170˚F (76˚C).
Pressure Limits: Aluminum body: 600 psig (41 bar); Brass body: 3500 psig (240 bar); 304 SS body: 6000 psig (413 bar).
Power Requirements: 12-35 VDC.
Enclosure Rating: NEMA 4X (IP66).
Accuracy: ±2% FS.
Repeatability: ±1% of FS.
Response Time: < 100 ms.
Output Signal: 4-20 mA; 0-5 V; 1-5 V.
Shipping Weight: 1/4 to 1/2˝ female NPT models: 3 lb (1.4 kg); 3/4 to 1˝ female NPT models: 4.5 lb (2.0 kg); 1-1/2˝ female NPT models: 12 lb (5.4 kg).

MODEL CHART

Model	Connection Size	Range, Water: GPM, LPM	Body Material
HFT-2205	1/2˝ female NPT	0.5 to 5.0, 2 to 19	Brass
HFT-2315	3/4˝ female NPT	1 to 15, 5 to 55	Brass
HFT-2320	3/4˝ female NPT	2 to 20, 1 to 75	Brass
HFT-2440	1˝ female NPT	4 to 40, 15 to 150	Brass
HFT-2550	1-1/2˝ female NPT	6 to 50, 20 to 190	Brass
HFT-3202	1/2˝ female NPT	.2 to 2, 1 to 8	304 SS
HFT-3210	1/2˝ female NPT	1 to 10, 3 to 3.75	304 SS

USA: California Proposition 65
⚠**WARNING:** This product can expose you to chemicals including Lead, which is known to the State of California to cause cancer and birth defects or other reproductive harm. For more information go to www.P65Warnings.ca.gov.

PADDLEWHEEL FLOW SENSOR

Non-Magnetic Sensing, Adjustable for 1-1/2 to 40″ (38.1 to 1016 mm) Pipe, Pulse or 4-20 mA

PFT-IAN-B111-S

PFT-HDN-S611-S shown with A-PFT-HKIT-SS

PFT-HDN-B611-S shown with A-PFT-HKIT

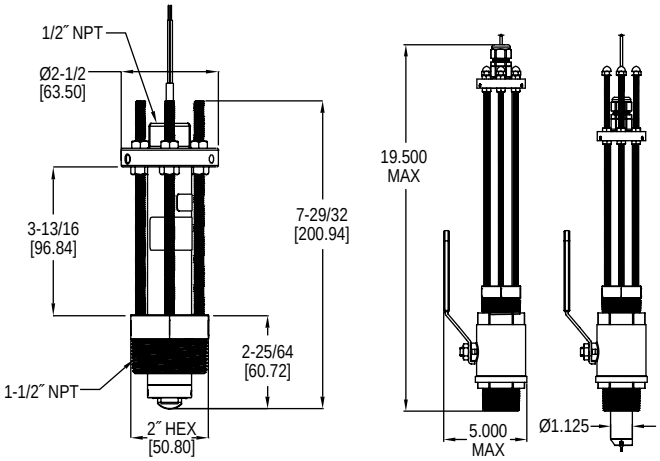

The **Series PFT Paddlewheel Flow Sensor** is used to monitor liquid flow rates in pipes from 1-1/2 to 40″ (40-1016 mm). The unit has one size-adjustable sensor and is available in brass or 316 stainless steel body. The unit outputs a frequency proportional pulsed or 4-20 mA output. The pulse models are a square wave output signal with frequency proportional to the flow velocity and the 4-20 mA models have a linear output of the velocity with 4 mA equal to 0 ft/s and 20 mA equal to 25 ft/s.

BENEFITS/FEATURES

- Long product life even in applications with particulate due to bearings and shaft that offer excellent wear protection
- Use in irrigation applications with weatherproof and submersible ratings
- Save time and inventory with one unit that is adjustable over a large pipe size range
- Application versatility with a variety of wetted material selections
- Reduce need for additional external components with integral 4-20 mA output
- Eliminate concerns regarding magnetic material in flow due to sensor technology, which uses inductive sensing and no magnets

APPLICATIONS

- Irrigation
- Ground water remediation
- Cooling systems
- Pump protection
- Leak detection
- Filtration systems

SPECIFICATIONS

Service: Water-based fluids.
Range: 1.2 to 25 ft/s (0.37 to 7.62 m/s).
Wetted Materials: Body and fitting: Brass or 316 SS; fitting O-ring: FKM standard, silicone or Buna-N optional; impeller: 316 SS; shaft: Tungsten carbide standard or 316 SS optional; bearing: PTFE standard.
Linearity: ±1.0% of FS.
Repeatability: ±0.5% of FS.
Temperature Limits: -40 to 212°F (-40 to 100°C).
Pressure Limits: 400 psig (27.6 bar) @ 100°F (37.8°C), 325 psig (22.4 bar) @ 212°F (100°C).
Process Connection: 1-1/2″ NPT male or 1-1/2″ BSPT male standard, 2″ NPT male or 2″ BSPT male optional.
Output: Pulse: NPN open collector with square wave output, rated 60 V @ 50 mA max; Frequency: 3.2 to 200 Hz. Pulse width: 2.5 msec ±25%; 4-20 mA: 4 mA is 0 ft/s, 20 mA is 25 ft/s.
Power Requirement: 10-35 VDC.
Power Consumption: 40 mA (max.).
Electrical Connection: 22 AWG shielded UL type PTLC rated 105°C, 20′ (6.1 m) long with cable gland. Can be extended up to 2000′ (609 m) with similar cable. Optional UL listed burial rated cable.
Enclosure Rating: NEMA 6P (IP67)*.
Housing Materials: Brass or 316 SS.
Weight: 3 lb (1.36 kg).
Compliance: CE.

*Brass units IP67 only.

MODEL CHART

Example	PFT	-I	D	N	-B	1	1	1	-S	-ST	PFT-IDN-B111-S-ST
Series	PFT										Paddlewheel flow sensor
Style		I H									Insertion Hot-tap insertion
Output			D A								600UA/40 MA 2.5 MS pulse Analog 4-20 mA transmitter
Approvals				N							None
Body Material					B S						Brass body 316 SST body
Mounting						1 2 3 4 5 6 7 8					1-1/2″ NPTM mounting 2″ NPTM mounting 1-1/2″ male BSPT mounting 2″ male BSPT mounting 1-1/2″ NPTM hot tap with valve 1-1/2″ NPTM hot tap without valve 1-1/2″ male BSPT hot tap with valve 1-1/2″ male BSPT hot tap without valve
O-Ring Material							1 2 3				FKM fluoroelastomer Silicone (FDA approved) Buna-N
Wetted Materials								1 2			Tungsten-carbide shaft, 316 SS impeller, PTFE bearing 316 SS shaft, 316 SS impeller, PTFE bearing
Electrical Connection									S B		22 GA shielded wire, 20 ft (6.1 m) 18 GA UL listed burial rated, 4 ft (1.2 m)
Options										ST	Stainless steel tag

MODEL CHART

Model	Description
PFT-IAN-B111-S	Standard brass 1-1/2″ NPTM analog output
PFT-IAN-S111-S	Standard 316 SST 1-1/2″ NPTM analog output
PFT-IDN-B111-S	Standard brass 1-1/2″ NPTM pulse output
PFT-IDN-S111-S	Standard 316 SST 1-1/2″ NPTM pulse output
PFT-HAN-B611-S	Hot tap without valve brass 1-1/2″ NPTM analog output
PFT-HAN-S611-S	Hot tap without valve 316 SST 1-1/2″ NPTM analog output
PFT-HDN-B611-S	Hot tap without valve brass 1-1/2″ NPTM pulse output
PFT-HDN-S611-S	Hot tap without valve 316 SST 1-1/2″ NPTM pulse output

ACCESSORIES

Model	Description
A-PFT-HKIT	1-1/2″ brass valve NPT with nipple
A-PFT-HKIT-SS	1-1/2″ SS valve NPT with nipple
A-PFT-HKIT-SS-BSPT	1-1/2″ SS valve BSPT with nipple

USA: California Proposition 65
⚠ **WARNING:** This product can expose you to chemicals including Lead, which is known to the State of California to cause cancer and birth defects or other reproductive harm. For more information go to www.P65Warnings.ca.gov.

Dwyer

SERIES SF

SIGHT FLOW TRANSMITTER

±2% FS Accuracy, 4-20 mA Output, Pressure up to 500 psig (34 bar)

CALIBRATION SERVICES AVAILABLE

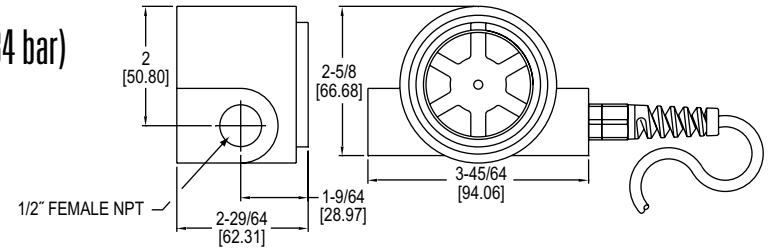

The **Series SF Sight Flow Transmitter** is a Series of sight indicators which can display flow or contents of pipelines and provide an analog 4-20 mA signal proportional to the flow rate. It is available with a 316 SS or clear polycarbonate cover.

BENEFITS/FEATURES
- Integrates tangential turbine technology with hermetically sealed circuitry to provide accurate flow measurement and control in the harshest environments
- 2-wire loop-powered design transmits a 4-20 mA signal proportional to flow rate for remote flow monitoring
- Clear polycarbonate viewing cover option for visible indication of flow
- 316 SS cover offers added protection with pressure limit up to 500 psig (34 bar)
- LED power indication, adjustable zero and span, polarity protection and over current limiting
- Accurately measures flow in both directions and can be mounted in any orientation

APPLICATIONS
- Cooling and lubrication circuits
- HVAC systems
- Aggressive chemical metering
- Batching systems

MODEL CHART

Model	Cover Material
SF10	316 SS
SF11	Clear polycarbonate

SPECIFICATIONS

Service: Compatible liquids.
Wetted Materials: 316 SS shaft and case, Iglide® bearings, Buna-N seal or EPR for -EPR units and acetal copolymer, (polycarbonate cover on Model SF11).
Flow Range: 0.5 to 15 GPM (2 to 60 LPM).
Accuracy: ±2% FS.
Repeatability: 0.5% FS.
Temperature Limits: 20 to 225°F (-7 to 107°C).
Pressure Limits: 500 psig (34 bar) Model SF10; 200 psig (14 bar) Model SF11.
Response Time: 2 s to 90% (step change in flow rate).
Supply Voltage: 12-35 VDC.
Output: 4-20 mA.
Loop Resistance: 1150 Ω max.
Process Connection: 1/2″ female NPT.
Electrical Connection: Wire leads: 22 AWG x 9′ (2.7 m).
Max. Particle Size: 100 µm.
Compliance: CE.

OPTIONS

Use order code:	Description
NISTCAL-FT1	NIST traceable calibration certificate

Iglide® is a registered trademark of Igus GMBH

SERIES SF2

SIGHT FLOW METERS

SPDT or Pulse Output, Visual Flow Confirmation, Brass Body

SF2-1

SF2-2

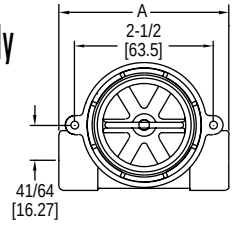

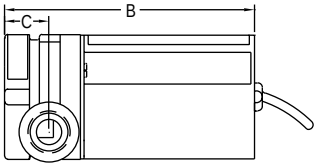

Side view VAC switch models

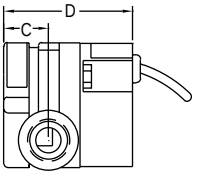

Side view VDC switch and transmitter models

DIMENSIONS in [mm]

Model	A	B	C	D	Model	A	B	C	D
SF2-104	3-1/64 [76.6]	-	7/8 [22.23]	2-21/64 [59.13]	**SF2-134**	3-61/64 [100.41]	-	1-1/16 [26.99]	2-61/64 [75]
SF2-101	3-1/64 [76.6]	4-1/2 [114.3]	7/8 [22.23]	-	**SF2-131**	3-61/64 [100.41]	4-49/64 [121.05]	1-1/16 [26.99]	-
SF2-114	3-1/64 [76.6]	-	7/8 [22.23]	2-21/64 [59.13]	**SF2-204**	3-1/64 [76.6]	-	13/16 [20.64]	2-21/64 [59.13]
SF2-111	3-1/64 [76.6]	4-1/2 [114.3]	7/8 [22.23]	-	**SF2-214**	3-1/64 [76.6]	-	13/16 [20.64]	2-21/64 [59.13]
SF2-124	3-61/64 [100.41]	-	1-1/16 [26.99]	2-61/64 [75]	**SF2-224**	3-61/64 [100.41]	-	1-1/16 [26.99]	2-61/64 [75]
SF2-121	3-61/64 [100.41]	4-49/64 [121.05]	1-1/16 [26.99]	-	**SF2-234**	3-61/64 [100.41]	-	1-1/16 [26.99]	2-61/64 [75]

The **Series SF2 Sight Flow Meters** combine visual confirmation of flow with a relay or pulse output. The SF2-1 offers a SPDT relay output and the SF2-2 offers a pulse output proportional to the rate of flow. The 4.5-24 VDC pulse output is compatible with most digital logic families.

BENEFITS/FEATURES
- Brass, solid body construction, one piece composite rotor, and ceramic shaft delivers durability with broader chemical, temperature, and pressure capabilities
- Set points are fully adjustable over the specified flow range
- The dynamic operation of the rotor guards against jamming and false actuation

APPLICATIONS
- Cooling and lubrication circuits
- HVAC systems
- Aggressive chemical metering
- Batching systems

SPECIFICATIONS

Service: Liquids compatible with wetted parts.
Wetted Materials: Brass body, ceramic pin, PPS rotor, Polysulfone lens and fluoroelastomer O-ring.
Accuracy: Relay output: ±5%; Pulsed output: ±7% for ranges up to 5.0 GPM, ±15% for ranges up to 60.0 GPM.
Temperature Limits: -20 to 212°F (-29 to 100°C).
Pressure Limit: 200 psig (13.8 bar) @ 70°F.
Power Requirements: See table.
Output: SPDT: 1 Amp, 24 VDC resistive; 0.3 Amp, 110 VAC or 4.5-24 VDC pulse depending on model.
Electrical Connections: Relay output models: 20AWG PVC-jacketed, 24″ cable; Pulsed output models: 22AWG PVC-jacketed, 24″ cable.
Process Connections: See table.
Set Point Differential: 15% max for relay output models.
Maximum Viscosity: 200 SSU.
Compliance: CE.

MODEL CHART - SPDT RELAY OUTPUT

Model	Range (GPM)	Power	Connection
SF2-104	0.5 to 5.0	24 VDC	1/4″ female NPT
SF2-101	0.5 to 5.0	110 VAC	1/4″ female NPT
SF2-114	4.0 to 20.0	24 VDC	1/2″ female NPT
SF2-111	4.0 to 20.0	110 VAC	1/2″ female NPT
SF2-124	5.0 to 30.0	24 VDC	3/4″ female NPT
SF2-121	5.0 to 30.0	110 VAC	3/4″ female NPT
SF2-134	8.0 to 60.0	24 VDC	1″ female NPT
SF2-131	8.0 to 60.0	110 VAC	1″ female NPT

MODEL CHART - PULSED OUTPUT

Model	Range (GPM)	Power	Connection
SF2-204	0.5 to 5.0	4.5-24 VDC	1/4″ female NPT
SF2-214	4.0 to 20.0	4.5-24 VDC	1/2″ female NPT
SF2-224	5.0 to 30.0	4.5-24 VDC	3/4″ female NPT
SF2-234	8.0 to 60.0	4.5-24 VDC	1″ female NPT

USA: California Proposition 65
WARNING: This product can expose you to chemicals including Lead, which is known to the State of California to cause cancer and birth defects or other reproductive harm. For more information go to www.P65Warnings.ca.gov.

Dwyer

SERIES SFI-800

SIGHT FLOW INDICATORS/TRANSMITTERS

Low Cost, Optional Output for Flow Rate and Totalization
UV Stabilized Polycarbonate Model

SFI-801

SFI-800

SFI with A-711 option

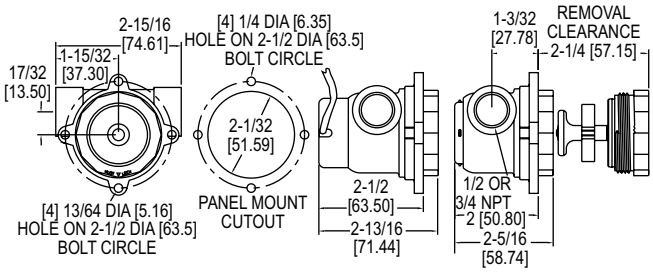

SFI with A-711 option

SFI model only

The **Series SFI-800 Sight Flow Indicators/Transmitters** are low cost, durable rotor style flow indicators with optional Hall Effect magnetic output packages to combine visual confirmation of flow with optional remote flow monitoring. There are three output sensors available, the A-711 offering two pulsed voltage signals proportional to flow rate, the A-712 which outputs a linear 1-10 VDC signal proportional to flow rate, and the A-713 which offers two programmable open collector switch outputs.
The Model A-711 is a unique and patent pending sensor that outputs two pulsed voltage signals with one providing a 5 VDC pulse and the other a pulse of the input supply voltage used, ranging from 8-18 VDC.
The Model A-712 is a sensor that outputs a linear 1-10 VDC signal proportional to flow rate.
The Model A-713 is a sensor with two programmable open collector switch outputs with one output closed above the set point and the other output closed below the set point ideal for low flow or high flow indication.

BENEFITS/FEATURES
- Constructed of clear plastic enabling 360° viewing of the rotor for easy flow indication
- SFI-800 models are constructed of Polysulfone with excellent chemical compatibility, high pressure and temperature ratings, and all wetted materials are FDA/NSF ratable for potable water applications
- SFI-801 models are constructed of UV stabilized Polycarbonate making them ideal for outdoor applications and easy view bright red impeller
- All three output packages cam be installed or replaced in the field without any tools and without removing the body from the process line
- Units are weather-tight for outdoor or wash-down area use
- A-713 features a user-friendly set point button which is set at the desired flow rate with red LED indication of switch status

APPLICATIONS
- Cooling and lubrication circuits
- HVAC systems
- Aggressive chemical metering
- Batching systems

SPECIFICATIONS

Service: Compatible fluids.
Wetted Materials: Body: SFI-800: Polysulfone; SFI-801: UV stabilized polycarbonate; Window: SFI-800: Polysulfone; SFI-801: UV stabilized polycarbonate; Rotor: SFI-800: White polysulfone; SFI-801: Red UV stabilized PBT; Rotor Pin: 316 SS; Thrust washers: 300 Series SS; O-ring: SFI-800: Fluoroelastomer (NSF grade); SFI-801: Buna-N.
Temperature Limits: SFI-800: -20 to 212°F (-29 to 100°C); SFI-801: -20 to 130°F (-29 to 55°C).
Pressure Limits: SFI-800: 150 psi (10.34 bar); SFI-801: 125 psi (8.62 bar).
Viscosity Max: 200 SSU.
Weight: SFI-800: 3.35 oz (95 g); SFI-800-A711: 5.0 oz (142 g).

ELECTRICAL SPECIFICATIONS (for A-711 Option Only)
Temperature Limits: -20 to 212°F (-29 to 100°C).
Power Requirements: 8-28 VDC.
Output Signal: White lead: 5 VDC; Green lead: 8-28 VDC equal to supply voltage. Pulsed output with frequency rate proportional to flow rate.
Accuracy: ±5% FS.
Frequency Output Range: 0 to 100 Hz.
Electrical Connections: Black lead - ground; White lead: 5 VDC out pulse; Green lead: 8-28 VDC out pulse; Red lead: 8-28 VDC supply.

ELECTRICAL SPECIFICATIONS (for A-712 option only)
Temperature Limits: -20 to 212°F (-29 to 100°C).
Power Requirements: 15-28 VDC.
Output Signal: White lead: 1-10 VDC.
Accuracy: ±5% FS.
Electrical Termination: Black lead: Ground; Red lead: 15-28 VDC input; White lead: 1-10 VDC output.

ELECTRICAL SPECIFICATIONS (for A-713 option only)
Temperature Limits: -20 to 212°F (-29 to 100°C).
Power Requirements: 8-28 VDC.
Output Signal: White lead: Normally open switch; Green lead: Normally closed switch. Both open collector, 100 mA max, 28 VDC max.
Electrical Connections: Black lead: Ground; White lead: Normally open; Green lead: Normally closed; Red lead: 8-28 VDC.

MODEL CHART - BODY ONLY

Polysulfone Body Model	Description	Range GPM (LPM)	Connection Female NPT
SFI-800-1/2	Indicator only	2 to 20 (7.6 to 75.5)	1/2″
SFI-800-3/4	Indicator only	3 to 35 (11.4 to 132.5)	3/4″
SFI-800-1/2-LF	Indicator only	0.5 to 6.5 (1.9 to 24.6)	1/2″
Polycarbonate Body Model	**Description**	**Range GPM (LPM)**	**Connection Female NPT**
SFI-801-1/2	Indicator only	2 to 20 (7.6 to 75.5)	1/2″
SFI-801-3/4	Indicator only	3 to 35 (11.4 to 132.5)	3/4″
SFI-801-1/2-LF	Indicator only	0.5 to 6.5 (1.9 to 24.6)	1/2″

MODEL CHART - SENSOR ONLY

Model	Description
A-711	Pulsed output
A-712	1-10 VDC
A-713	Two open collectors

Note: Sensor only, not attached to the flow indicator body.

OPTIONS - BODY AND SENSORS ATTACHED

To order add suffix:	Description
-A711	A-711 attached to flow indicator body
-A712	A-712 attached to flow indicator body
-A713	A-713 attached to flow indicator body

Example: SFI-800-1/2-A711

SERIES SFI-100T

SIGHT FLOW INDICATOR/TRANSMITTER

Output for Flow Rate and Totalization

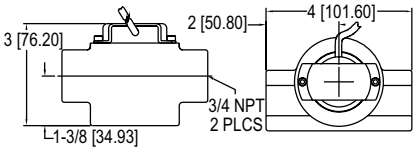

The **Series SFI-100T Sight Flow Indicator/Transmitter** is a low cost and durable flow transmitter that combines our popular 100 Series Sight Flow Indicator with our A-711T output sensor for visual and remote monitoring of flow. The A-711T output sensor has two pulsed voltage signals with one providing a 5 VDC pulse, the other a pulse of the input supply voltage used, ranging from 8-28 VDC and a pulsed output with a frequency change proportional to the flow rate.

BENEFITS/FEATURES
- Constructed of a robust, solid brass body and a tempered glass window
- Bright red impeller yields great visual indication of flow through the window
- Front window can be easily unscrewed to clean out the sight flow indicator
- Ideal for outdoor applications with weatherproof body that is unaffected by UV light

APPLICATIONS
- Cooling and lubrication circuits
- HVAC systems
- Monitoring chilled or hot water flow
- Monitoring water flow in chillers

SPECIFICATIONS

Service: Compatible fluids.
Wetted Materials: Body: Brass; Window: Tempered glass; Rotor: Red UV stabilized PBT; Rotor pin: 316 SS; Thrust washers: 300 series SS; Gasket: Buna-N.
Temperature Limits: -20 to 200°F (-29 to 93°C).
Pressure Limits: 125 psi (8.62 bar).
Viscosity Max: 200 SSU.
Weight: SFI only: 1.5 lb (0.7 kg); with A-711T: 1.8 lb (0.8 kg).

ELECTRICAL SPECIFICATIONS
Temperature Limits: -20 to 212°F (-29 to 100°C).
Power Requirements: 8-28 VDC.
Output Signal: White lead: 5 VDC. Green lead: 8-28 VDC equal to supply voltage. Pulsed output with frequency rate proportional to flow rate.
Accuracy: ±5% FS.
Frequency Output Range: 0 to 100 Hz.
Mounting Orientation: Horizontal.
Electrical Connections: Black lead: Ground; White lead: 5 VDC out pulse; Green lead: 8-28 VDC out pulse; Red lead: 8-28 VDC supply.

MODEL CHART

Model	Description	Range GPM (LPM)	Connection Female NPT
SFI-100T-1/2-A711T	Brass indicator with A-711T sensor	2 to 20 (7.6 to 75.5)	1/2″
SFI-100T-3/4-A711T	Brass indicator with A-711T sensor	3 to 35 (11.4 to 132.5)	3/4″
A-711T	Output sensor package	-	-

USA: California Proposition 65
WARNING: This product can expose you to chemicals including Lead, which is known to the State of California to cause cancer and birth defects or other reproductive harm. For more information go to www.P65Warnings.ca.gov.

Dwyer

SERIES WMH

MULTI-JET HOT WATER METER

High Temperature Threshold, Pulsed Output

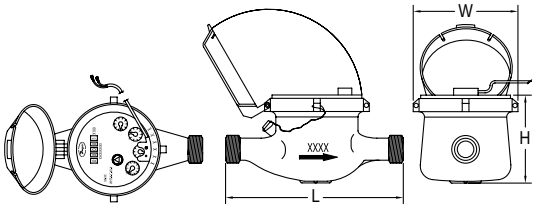

Size in [mm]	Spud NPSM [BSPP]	Length 'L' in [mm]	Width 'W' in [mm]	Height 'H' in [mm]	Weight lb [kg]
5/8 x 1/2 [15]	3/4″[3/4″]	6-1/2 [165]	3-45/64 [94]	4-15/64 [107.5]	3.75 [1.7]
5/8 x 3/4	1″[1″]	7-1/2 [190]	3-45/64 [94]	4-15/64 [107.5]	3.97 [1.8]
3/4 [20]	1″[1″]	7-1/2 [190]	3-45/64 [94]	4-15/64 [107.5]	4.9 [2.2]
1 [25]	1-1/4″[1-1/4″]	10-1/4 [260]	3-55/64 [98]	4-5/8 [117.5]	6.4 [2.9]
1-1/4 [32]	1-1/2″[1-1/2″]	10-1/4 [260]	3-55/64 [98]	4-5/8 [117.5]	8.2 [3.7]
1-1/2 [40]	2″[2″]	11-13/16 [300]	4-51/64 [122]	5-9/16 [141.5]	13.52 [6.17]
2 [50]	2-1/2″[2-1/2″]	11-13/16 [300]	5-45/64 [145]	6-31/32 [177]	18.74 [8.5]

The **Series WMH Multi-Jet Hot Water Meter** is a series of mechanical, water totalizing meters that display the total water usage in gallons with m³ options. They are available in a range of body sizes and include NPT or BSPT optional couplings. The high temperature resistant brass body is compatible in applications with high temperature water not suitable with standard brass water meters and maintains its accuracy.

BENEFITS/FEATURES

- High temperature threshold of 190°F (88°C) ideal for high temperature applications
- Multi-jet design allows for simplicity and accuracy with wide flow ranges, even in low flow applications
- Magnetically driven, hermetically sealed register does not leak or fog and is completely separated from the water
- Designed for long service life and maintenance-free operation
- Integral strainer that protects meter from particulate damage
- Easy installation with included coupling adapters
- Pulsed output proportional to flow allows for remote flow totalization

APPLICATIONS

- HVAC applications
- Measuring total condenser water flow in residential, commercial and industrial applications
- Remote hot water monitoring

SPECIFICATIONS

Service: Water.
Wetted Materials: Body: Brass; Couplings: Brass; Measuring chamber: Brass.
Flow Range: See model chart.
Accuracy: WMH-A-X-XX: Transitional flow: ±3%; Nominal flow: ±1.5%.
Temperature Limit: 190°F (88°C).
Pressure Limit: 150 psi (10 bar).
Totalizing Display Maximum: See model chart.
Output Signal: Pulse output with frequency proportional to flow rate.
Pulse Options: 0.1 gal, 1 gal, 10 gal, 100 gal per pulse (1 L, 10 L, 100 L, 1000 per pulse) See model chart.*
Electrical Rating: 0.01A @ 24VAC/DC.
Electrical Connections: Color-coded lead wires, 4.5´ (1.5 m) long.
Mounting Orientation: Horizontal with register facing up.
Weight: See dimension chart.

*Consult factory for m³, BSPT units or additional pulse output options.

USA: California Proposition 65
WARNING: This product can expose you to chemicals including Lead, which is known to the State of California to cause cancer and birth defects or other reproductive harm. For more information go to www.P65Warnings.ca.gov.

MODEL CHART

Model	Size	Coupling Size	GPM (Gallons Per Minute) Max Flow	Nominal Flow Range	Transitional Flow	Display Max (Gallons)	Pulse Rate (Gal/Pulse)
WMH-A-C-01	5/8″ x 1/2″	1/2″ NPT	20	1 to 20	0.25	9,999,999.99	0.1
WMH-A-C-02	5/8″ x 3/4″	3/4″ NPT	20	1 to 20	0.25	9,999,999.99	0.1
WMH-A-C-03	3/4″ SL	3/4″ NPT	30	2 to 30	0.5	9,999,999.99	0.1
WMH-A-C-06	1″	1″ NPT	50	3 to 50	0.75	9,999,999.99	0.1
WMH-A-C-01-1	5/8″ x 1/2″	1/2″ NPT	20	1 to 20	0.25	9,999,999.99	1
WMH-A-C-02-1	5/8″ x 3/4	3/4″ NPT	20	1 to 20	0.25	9,999,999.99	1
WMH-A-C-03-1	3/4″ SL	3/4″ NPT	30	2 to 30	0.5	9,999,999.99	1
WMH-A-C-06-1	1″	1″ NPT	50	3 to 50	0.75	9,999,999.99	1
WMH-A-C-07-1	1-1/2″	1-1/2″ NPT	100	5 to 100	1.5	9,999,999.9	1
WMH-A-C-08-1	2″	2″ NPT	160	8 to 160	2	9,999,999.9	1
WMH-A-C-01-10	5/8 x 1/2″	1/2″ NPT	20	1 to 20	0.25	9,999,999.99	10
WMH-A-C-02-10	5/8 x 3/4″	3/4″ NPT	20	1 to 20	0.25	9,999,999.99	10
WMH-A-C-03-10	3/4″ SL	3/4″ NPT	30	2 to 30	0.5	9,999,999.99	10
WMH-A-C-06-10	1″	1″ NPT	50	3 to 50	0.75	9,999,999.99	10
WMH-A-C-07-10	1-1/2″	1-1/2″ NPT	100	5 to 100	1.5	9,999,999.9	10
WMH-A-C-08-10	2″	2″ NPT	160	8 to 160	2	9,999,999.9	10

SERIES WNT

MULTI-JET BRASS BODY WATER METER

NSF Certified, Lead Free, Economical

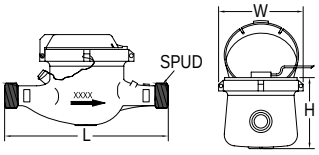

Size in [mm]	Spud NPSM [BSPP]	Length 'L' in [mm]	Width 'W' in [mm]	Height 'H' in [mm]	Weight lb [kg]
5/8 x 1/2 [15]	3/4″[3/4″]	7-31/64 [190]	3-45/64 [94]	4-15/64 [107.5]	3.58 [1.63]
5/8 x 3/4 [15]	1″[1″]	7-31/64 [190]	3-45/64 [94]	4-15/64 [107.5]	3.81 [1.73]
3/4 [20]	1″[1″]	10-1/4 [260]	3-55/64 [98]	4-5/8 [117.5]	6.02 [2.73]
1 [25]	1-1/4″[1-1/4″]	10-1/4 [260]	3-55/64 [98]	4-5/8 [117.5]	6.02 [2.73]
1-1/2 [40]	2″ [2″]	11-13/16 [300]	4-51/64 [122]	4-5/8 [117.5]	12.02 [5.45]
2 [50]	2-1/2″ [2-1/2″]	11-13/16 [300]	5-45/64 [145]	5-9/16 [141.5]	13.23 [6]

The **Series WNT Multi-Jet Brass Body Water Meter** is a series of mechanical, water totalizing meters that display the total water usage in gallons or cubic meter. They are available in a range of body sizes and include NPT or BSPT couplings. Its lead free, NSF certified body is ideal for potable water applications.

BENEFITS/FEATURES

- NSF/ANSI makes it ideal for no lead portable water requirements
- Multi-jet design allows for simplicity and accuracy with wide flow ranges, even in low flow applications
- Magnetically driven, hermetically sealed register does not leak or fog and is completely separated from the water
- Designed for long service life and maintenance-free operation
- Integral strainer that protects meter from particulate damage
- Easy installation with included coupling adapters
- Pulsed output proportional to flow allows for remote flow totalization

APPLICATIONS

- Potable water applications
- Residential water measurement
- Remote water monitoring

SPECIFICATIONS

Service: Water.
Wetted Materials: Body: ECO BRASS®; Couplings: ECO BRASS®; Measuring chamber: ABS plastic.
Flow Range: See model chart.
Accuracy: Transitional flow: ±3%; Nominal flow: ±1.5%.
Temperature Limit: 122°F (50° C).
Pressure Limit: 150 psi (10 bar).
Totalizing Display Maximum: See model chart.
Output Signal: Pulse output with frequency proportional to flow rate.
Pulse Options: 0.1 gal, 1 gal, 10 gal, 100 gal per pulse.
Electrical Rating: 0.01 A @ 24 VAC/DC.
Electrical Connections: Color-coded lead wires, 4.5´ (1.5 m) long.
Mounting Orientation: Horizontal with register facing up.
Weight: See dimension chart.
Compliance: NSF.

USA: California Proposition 65
WARNING: This product can expose you to chemicals including Lead, which is known to the State of California to cause cancer and birth defects or other reproductive harm. For more information go to www.P65Warnings.ca.gov.

MODEL CHART

Model	Size	Coupling Size	GPM (Gallons Per Minute) Max Flow	Nominal Flow Range	Transitional Flow	Display Max (Gallons)	Pulse Rate (Gal/Pulse)
WNT-A-C-01	5/8″ x 1/2″	1/2″ NPT	20	1 to 20	0.25	9,999,999.99	0.1
WNT-A-C-02	5/8″ x 3/4″	3/4″ NPT	20	1 to 20	0.25	9,999,999.99	0.1
WNT-A-C-05	3/4″ x 1″	1″ NPT	30	2 to 30	0.5	9,999,999.99	0.1
WNT-A-C-06	1″	1″ NPT	50	3 to 50	0.75	9,999,999.99	0.1
WNT-A-C-07-1	1-1/2″	1-1/2″ NPT	100	5 to 100	1.25	9,999,999.9	1
WNT-A-C-08-1	2″	2″ NPT	160	8 to 160	2	9,999,999.9	1

ECO Brass® is a registered trademark patent by Mitsubishi Materials Corporation

Dwyer

SERIES WM2 & WMT2

MULTI-JET WATER METER

Economical, Brass Body, Dry Dial

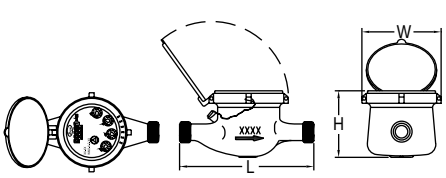

WM2

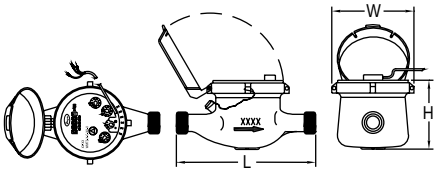

WMT2

WM2

WMT2

Size in (mm)	Spud NPSM (BSPP)	Length 'L' in (mm)	Width 'W' in (mm)	Height 'H' in (mm)	Weight lb (kg)
5/8 x 1/2 (15)	3/4″ (3/4″)	6-1/2 (165)	3-45/64 (94)	4-15/64 (107.5)	3.75 (1.7)
5/8 x 3/4	1″ (1″)	7-1/2 (190)	3-45/64 (94)	4-15/64 (107.5)	3.97 (1.8)
3/4 (20)	1″ (1″)	7-1/2 (190)	3-45/64 (94)	4-15/64 (107.5)	4.9 (2.2)
1 (25)	1-1/4″ (1-1/4″)	10-1/4 (260)	3-55/64 (98)	4-5/8 (117.5)	6.4 (2.9)
1-1/4 (32)	1-1/2″ (1-1/2″)	10-1/4 (260)	3-55/64 (98)	4-5/8 (117.5)	8.2 (3.7)
1-1/2 (40)	2″ (2″)	11-13/16 (300)	4-51/64 (122)	5-9/16 (141.5)	13.52 (6.17)
2 (50)	2-1/2″ (2-1/2″)	11-13/16 (300)	5-45/64 (145)	6-31/32 (177)	18.74 (8.5)

The **Series WM2 Multi-Jet Water Meter** is a series of mechanical, water totalizing meters that display the total water usage in gallons or m³. They are available in a range of body sizes and include NPT or BSPT couplings. The **Series WMT2 Multi-Jet Water Meter with Pulsed Output** is a series of mechanical, water totalizing meters that display the total water usage in gallons or m³ and provide a reed switch output proportional to flow rate. They are available in a range of body sizes and include NPT or BSPT couplings.

BENEFITS/FEATURES

- Multi-jet design allows for simplicity and accuracy with wide flow ranges, even in low flow applications
- Magnetically driven, hermetically sealed register does not leak or fog and is completely separated from the water
- Designed for long service life and maintenance-free operation, even under harsh conditions
- Integral strainer that protects meter from particulate damage
- Easy installation with included coupling adapters

APPLICATIONS

- Irrigation
- Cooling systems
- Filtration systems
- Water monitoring

SPECIFICATIONS

Service: Water.
Wetted Materials: Body: Brass, polyethylene; Couplings: Brass; Measuring chamber: Polyethylene, ABS plastic, ferrite, acetal.
Flow Range: See model chart.
Accuracy: Transitional flow: ±5%; Nominal flow: ±2%.
Temperature Limit: 104°F (40°C).
Pressure Limit: 232 psi (16 bar).
Totalizing Display Maximum: See model chart.
Output Signal: Pulse output with frequency proportional to flow rate (WMT2 only).
Pulse Options: 0.1 gal, 1 gal, 10 gal, 100 gal per pulse (1 L, 10 L, 100 L per pulse) (WMT2 only).
Electrical Rating: 0.01 A @ 24 VAC/DC (WMT2 only).
Electrical Connections: Color-coded lead wires, 4.5´ (1.5 m) long (WMT2 only).
Mounting Orientation: Horizontal with the register face pointing up.
Weight: See dimension chart.

MODEL CHART

Model	Size	Coupling Size	Max Flow GPM (Gallons Per Minute)	Nominal Flow Range	Transitional Flow	Display Max (Gallons)
WM2-A-C-01	5/8 x 1/2″	1/2″ NPT	20	1 to 20	0.25	9,999,999.99
WM2-A-C-02	5/8 x 3/4″	3/4″ NPT	20	1 to 20	0.25	9,999,999.99
WM2-A-C-03	3/4″	3/4″ NPT	30	2 to 30	0.5	99,999,999.9
WM2-A-C-04	1″	1″ NPT	50	3 to 50	0.75	99,999,999.9
WM2-A-C-06	1-1/2″	1-1/2″ NPT	100	5 to 100	1.5	99,999,999.9
WM2-A-C-07	2″	2″ NPT	160	8 to 160	2	99,999,999.9

MODEL CHART

Model	Size	Coupling Size	Max Flow m³/h	Nominal Flow Range	Transitional Flow	Display Max (m³)
WM2-B-C-08	15 mm	1/2″ BSPT	3	0.12 to 1.5	0.03	99,999.9999
WM2-B-C-10	20 mm	3/4″ BSPT	5	0.2 to 2.5	0.05	99,999.9999
WM2-B-C-11	25 mm	1″ BSPT	7	0.28 to 3.5	0.07	99,999.9999
WM2-B-C-12	32 mm	1-1/4″ BSPT	12	0.48 to 6	0.12	99,999.9999
WM2-B-C-13	40 mm	1-1/2″ BSPT	20	0.8 to 10	0.2	999,999.9999
WM2-B-C-14	50 mm	2″ BSPT	30	1.2 to 15	0.3	999,999.9999

MODEL CHART

Model	Size	Coupling Size	Max Flow GPM (Gallons Per Minute)	Nominal Flow Range	Transitional Flow	Display Max (Gallons)	Pulse Rate (Gal./Pulse)
WMT2-A-C-01	5/8 x 1/2″	1/2″ NPT	20	1 to 10	0.25	9,999,999.99	0.1
WMT2-A-C-02	5/8 x 3/4″	3/4″ NPT	20	1 to 20	0.25	9,999,999.99	0.1
WMT2-A-C-03*	3/4″	3/4″ NPT	30	2 to 30	0.25	9,999,999.99	0.1
WMT2-A-C-04	1″	1″ NPT	50	3 to 50	0.75	99,999,999.9	0.1
WMT2-A-C-01-1	5/8 x 1/2″	1/2″ NPT	20	1 to 10	0.25	9,999,999.99	1
WMT2-A-C-02-1	5/8 x 3/4″	3/4″ NPT	20	1 to 20	0.25	9,999,999.99	1
WMT2-A-C-03-1*	3/4″	3/4″ NPT	30	2 to 30	0.25	9,999,999.99	1
WMT2-A-C-04-1	1″	1″ NPT	50	3 to 50	0.75	99,999,999.9	1
WMT2-A-C-06-10	1-1/2″	1-1/2″ NPT	100	5 to 100	1.5	99,999,999.9	10
WMT2-A-C-07-10	2″	2″ NPT	160	8 to 160	2	99,999,999.9	10
WMT2-A-C-04-100	1″	1″ NPT	50	3 to 50	0.75	99,999,999.9	100
WMT2-A-C-07-100	2″	2″ NPT	160	8 to 160	2	99,999,999.9	100

*Does not include inlet filter.

MODEL CHART

Model	Size	Coupling Size	Max Flow m³/h	Nominal Flow Range	Transitional Flow	Display Max (m³/h)	Pulse Rate (L/Pulse)
WMT2-B-C-08-1	15 mm	1/2″ BSPT	3	0.12 to 1.5	0.03	99,999.9999	1
WMT2-B-C-10-1*	20 mm	3/4″ BSPT	5	0.2 to 2.5	0.05	99,999.9999	1
WMT2-B-C-11-1	25 mm	1″ BSPT	7	0.25 to 3.5	0.07	99,999.9999	1
WMT2-B-C-12-1	32 mm	1-1/4″ BSPT	12	0.48 to 6	0.12	99,999.9999	1
WMT2-B-C-08-10	15 mm	1/2″ BSPT	3	0.12 to 1.5	0.03	99,999.9999	10
WMT2-B-C-12-10	32 mm	1-1/4″ BSPT	12	0.48 to 6	0.12	99,999.9999	10
WMT2-B-C-14-10	50 mm	2″ BSPT	30	1.2 to 15	0.3	999,999.9999	10
WMT2-B-C-12-100	32 mm	1-1/4″ BSPT	12	0.48 to 6	0.12	99,999.9999	100
WMT2-B-C-14-100	50 mm	2″ BSPT	30	1.2 to 15	0.3	999,999.9999	100

*Does not include inlet filter.

USA: California Proposition 65
⚠ **WARNING:** This product can expose you to chemicals including Lead, which is known to the State of California to cause cancer and birth defects or other reproductive harm. For more information go to www.P65Warnings.ca.gov.

Dwyer

SERIES WVT

VERTICAL WATER METERS

Polymer Body, Vertical or Horizontal Installation, Pulse Output

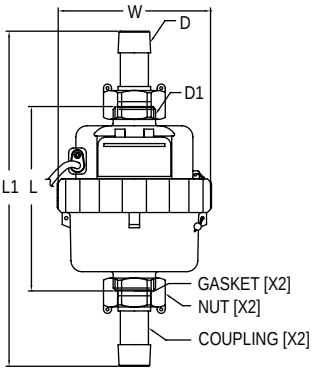

DIMENSIONS CHART				
Spud Size	Length "L" in [mm]	Length with NPT Coupling "L1" in [mm]	Width "W" In [mm]	Weight lb [kg]
G3/4	4.53 [115]	8.23 [209]	3.78 [96]	1.15 [0.52]
G1	6.50 [165]	10.16 [258]	4.17 [106]	1.34 [0.6]

The **Series WVT Vertical Water Meter** is a series of rotary piston water meters that display total water usage. The piston displacement technology results in accurate and reliable operation in either horizontal or vertical mounting. Polymer and stainless steel construction provides high durability and environmental resistance at an economical price. The optional pulse output can be used for flow verification and totalization. Adapter couplings are included to convert BSPP threads on the meter to NPT.

FEATURES/BENEFITS
- Accurate flow measurement in vertical and horizontal orientations
- Polymer materials prevent corrosion and chemical damage
- Pulse output for flow monitoring
- One-way valve prevents backflow into the meter

APPLICATIONS
- Irrigation Flow monitoring
- Water usage in manufactured equipment
- Residential water metering

SPECIFICATIONS

Service: Water.
Wetted Materials: ABS, POM, SS, Buna-N.
Flow Range: See model chart.
Accuracy: Nominal flow: ±2%; Transitional flow: ±5%.
Temperature Limit: 122°F (50°C).
Pressure Limit: 150 psi (1034 kPa).
Totalizing Display Maximum: 999,999.99 gallons.
Output Signal: Pulse output with frequency proportional to flowrate.
Pulse Rate: 0.05 gal/pulse.
Electrical Rating: 0.01 A @ 24 VAC/DC.
Electrical Connections: 3.5mm² stranded color-coded lead wires, 5´ (1.5 m) length.
Mounting Orientation: Horizontal or vertical.
Weight: See dimension chart.

MODEL CHART

Model	Meter Size	Coupling Size	Output	GPM (Gallons Per Minute) Min Flow	Transitional Flow	Max Flow
WVT-A-01	3/4″	1/2″ NPT	None	0.07	0.11	13.75
WVT-A-02	1″	3/4″ NPT	None	0.11	0.18	22
WVT-A-01-1	3/4″	1/2″ NPT	Pulse	0.07	0.11	13.75
WVT-A-02-1	1″	3/4″ NPT	Pulse	0.11	0.18	22

SERIES WPT

MULTI-JET PLASTIC WATER METER

Lead Free, Economical Plastic Body, Pulse Output

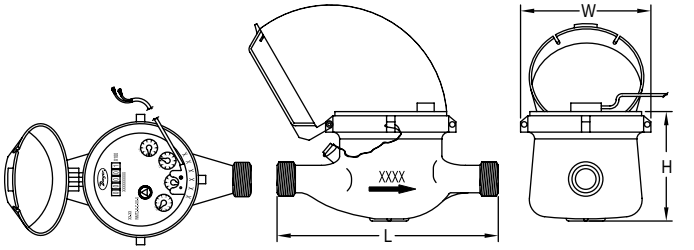

Size in [mm]	Spud NPSM [BSPP]	Length 'L' in [mm]	Width 'W' in [mm]	Height 'H' in [mm]	Weight lb [kg]
5/8 x 1/2 [15]	3/4″ [3/4″]	6-1/2 [165]	3-23/32 [94]	4-15/64 [107.5]	1.55 [0.7]
5/8 x 3/4	1″ [1″]	7-1/2 [190]	3-23/32 [94]	4-15/64 [107.5]	1.77 [0.8]
3/4 x 1 [20]	1-1/4″ [1-1/4″]	10-1/4 [260]	3-23/32 [94]	4-15/64 [107.5]	2.43 [1.1]
1 [25]	1-1/4″ [1-1/4″]	10-1/4 [260]	3-23/32 [94]	4-15/64 [107.5]	2.43 [1.1]
1-1/2 [40]	2″ [2″]	9-5/8 [245]	4-13/16 [122]	5-45/64 [141.5]	4.41 [2]

The **Series WPT Multi-Jet Plastic Water Meter** is a series of mechanical, water totalizing meters that display the total water usage in gallons with m³ options. They are available in a range of body sizes and include NPT or BSPT optional couplings. The plastic body water meters can be used in potable water applications, some corrosive environments, or where an economical water totalizer is desired.

BENEFITS/FEATURES
- Plastic body ideal for lead free requirements
- Multi-jet design allows for simplicity and accuracy with wide flow ranges, even in low flow applications
- Magnetically driven, hermetically sealed register does not leak or fog and is completely separated from the water
- Designed for long service life and maintenance-free operation
- Integral strainer that protects meter from particulate damage
- Easy installation with included coupling adapters
- Pulsed output proportional to flow allows for remote flow totalization

SPECIFICATIONS

Service: Water.
Wetted Materials: Body: Nylon 66; Couplings: Nylon 66, 1-1/2″ (40 mm) sizes lead free ECO BRASS® alloy; Measuring Chamber: ABS Plastic.
Flow Range: See model chart.
Accuracy: WPT-A-X-XX: Transitional Flow: ±3%; Nominal Flow: ±1.5%.
Temperature Limit: 122°F (50°C).
Pressure Limit: 150 psi (10 bar).
Totalizing Display Maximum: See model chart.
Output Signal: Pulse output with frequency proportional to flow rate.
Pulse Options: 0.1 gal, 1 gal, 10 gal, 100 gal per pulse (1 L, 10 L, 100 L, 1000 per pulse) See model chart.*
Electrical Rating: 0.01 A @ 24 VAC/DC.
Electrical Connections: Color-coded lead wires, 4.5´ (1.5 m) long.
Mounting Orientation: Horizontal with register facing up.
Weight: See dimension chart.

*Consult factory for m³, BSPT units or additional pulse output options.

MODEL CHART

Model	Size	Coupling Size	GPM (Gallons Per Minute) Max Flow	Nominal Flow Range	Transitional Flow	Display Max (Gallons)	Pulse Rate (Gal/Pulse)
WPT-A-C-01	5/8″ x 1/2″	1/2″ NPT	20	1 to 20	0.25	9,999,999.99	0.1
WPT-A-C-02	5/8″ x 3/4″	3/4″ NPT	20	1 to 20	0.25	9,999,999.99	0.1
WPT-A-C-03	3/4″ x 1″	1″ NPT	30	2 to 30	0.5	9,999,999.99	0.1
WPT-A-C-04	1″	1″ NPT	50	3 to 50	0.75	9,999,999.99	0.1
WPT-A-C-01-1	1/2″	1/2″ NPT	20	1 to 20	0.25	9,999,999.99	1
WPT-A-C-02-1	5/8″ x 3/4″	3/4″ NPT	20	1 to 20	0.25	9,999,999.99	1
WPT-A-C-03-1	3/4″ x 1″	1″ NPT	30	2 to 30	0.5	9,999,999.99	1
WPT-A-C-04-1	1″	1″ NPT	50	3 to 50	0.75	9,999,999.99	1
WPT-A-C-05-1	1-1/2″	1-1/2″ NPT	100	5 to 100	1.5	9,999,999.9	1
WPT-A-C-01-10	1/2″	1/2″ NPT	20	1 to 20	0.25	9,999,999.99	10
WPT-A-C-02-10	5/8″ x 3/4″	3/4″ NPT	20	1 to 20	0.25	9,999,999.99	10
WPT-A-C-03-10	3/4″ x 1″	1″ NPT	30	2 to 30	0.5	9,999,999.99	10
WPT-A-C-04-10	1″	1″ NPT	50	3 to 50	0.75	9,999,999.99	10
WPT-A-C-05-10	1-1/2″	1-1/2″ NPT	100	5 to 100	1.5	9,999,999.9	10

APPLICATIONS
- Low cost residential water measurement
- Agriculture (fertilizers, pesticides, and herbicides)
- Irrigation
- Remote water monitoring

USA: California Proposition 65
⚠ **WARNING:** This product can expose you to chemicals including Lead, which is known to the State of California to cause cancer and birth defects or other reproductive harm. For more information go to www.P65Warnings.ca.gov.

ECO BRASS® is a registered mark patented by Mitsubishi Shindoh

MULTI-JET NSF CERTIFIED PLASTIC WATER METER

Lead Free, Economical Plastic Body, Pulse Output

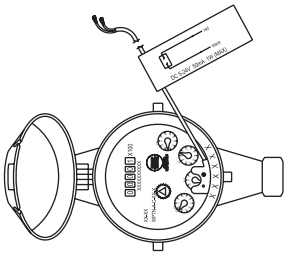

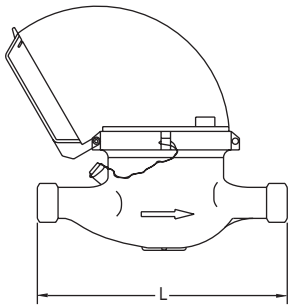

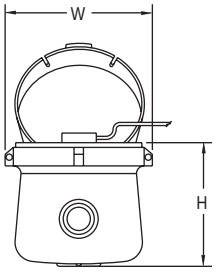

Spud Size (BSPP)	Coupling Size (NPT)	L	W	H	Weight
5/8″	1/2″	6-1/2″ [165 mm]	3-23/32″ [94 mm]	4-15/64″ [107.5 mm]	1.55 lb [0.7 kg]
5/8″	3/4″	7-1/2″ [190 mm]	3-23/32″ [94 mm]	4-15/64″ [107.5 mm]	1.77 lb [0.8 kg]
3/4″	1″	10-1/4″ [260 mm]	3-55/64″ [98 mm]	4-5/8″ [117.5 mm]	2.43 lb [1.1 kg]
1″	1″	10-1/4″ [260 mm]	3-55/64″ [98 mm]	4-5/8″ [117.5 mm]	2.43 lb [1.1 kg]
1-1/2″	1-1/2″	11-13/16″ [300 mm]	4-13/16″ [122 mm]	5-45/64″ [141.5 mm]	4.41 lb [2 kg]

The **Series WPTN Multi-Jet NSF Certified Plastic Water Meter** is a series of plastic mechanical water totalizing meters with NSF certification. The meters display the total water usage in gallons. They are available in a range of body sizes and include NPT optional couplings. The plastic body water meters can be used where standard brass is not compatible, in potable water applications, some corrosive environments, or where an economical water totalizer is desired.

BENEFITS/FEATURES

- Plastic, NSF certified body is ideal for potable water applications
- Multi-jet design allows for accuracy in various flow ranges, even in low flow applications
- Magnetically driven, hermetically sealed register does not leak or fog and is completely separated from the water
- Designed for long service life and maintenance-free operation
- Integral strainer protects meter from particulate damage
- Included coupling adapters simplify installation
- Pulsed output proportional to flow allows for remote flow totalization

APPLICATIONS

- Potable water
- Commercial water usage
- Chiller water usage
- Low cost residential water measurement
- Agriculture (fertilizers, pesticides, and herbicides)
- Irrigation
- Remote water monitoring

SPECIFICATIONS

Service: Water.
Wetted Materials: Body: PA; Couplings: PA; Measuring chamber: ABS plastic.
Flow Range: See model chart.
Accuracy: WPTN-A-X-XX: Minimum flow: ±3%; Nominal flow: ±1.5%.
Temperature Limit: 112°F (50°C).
Pressure Limit: 150 psi (10 bar).
Pressure Drop: See pressure drop curve.
Totalizing Display Maximum: See model chart.
Output Signal: Pulse output with frequency proportional to flow rate.
Pulse Options: 0.1 gal, 1 gal, 10 gal, 100 gal per pulse (1 L, 10 L, 100 L, 1000 L per pulse*). See model chart.
Electrical Rating: 0.01 A @ 24 VAC/DC.
Electrical Connections: 3.5 mm^2 stranded lead wires, 4.5´ (1.5 m) long.
Mounting Orientation: Horizontal with meter face facing up.
Weight: See dimension chart.
Approvals: NSF/ANSI 61.

*Consult factory.

MODEL CHART

Model	Size	Coupling Size	GPM (Gallons Per Minute) Maximum Flow	Nominal Flow Range	Minimum Flow	Display Max (Gallons)	Pulse Rate (Gal/Pulse)
WPTN-A-C-01	5/8″ x 1/2″	5/8″ x 1/2″	20	1 to 20	0.25	9,999,999.99	0.1
WPTN-A-C-02	5/8″ x 3/4″	5/8″ x 3/4″	20	1 to 20	0.25	9,999,999.99	0.1
WPTN-A-C-03	3/4″ x 1″	3/4″ x 1″	30	2 to 30	0.5	9,999,999.99	0.1
WPTN-A-C-04	1″	1″	50	3 to 50	0.75	9,999,999.99	0.1
WPTN-A-C-01-1	5/8″ x 1/2″	5/8″ x 1/2″	20	1 to 20	0.25	9,999,999.99	1
WPTN-A-C-02-1	5/8″ x 3/4″	5/8″ x 3/4″	20	1 to 20	0.25	9,999,999.99	1
WPTN-A-C-03-1	3/4″ x 1″	3/4″ x 1″	30	2 to 30	0.5	9,999,999.99	1
WPTN-A-C-04-1	1″	1″	50	3 to 50	0.75	9,999,999.99	1
WPTN-A-C-05-1	1-1/2″	1-1/2″	100	5 to 100	1.5	99,999,999.9	1
WPTN-A-C-01-10	5/8″ x 1/2″	5/8″ x 1/2″	20	1 to 20	0.25	9,999,999.99	10
WPTN-A-C-02-10	5/8″ x 3/4″	5/8″ x 3/4″	20	1 to 20	0.25	9,999,999.99	10
WPTN-A-C-03-10	3/4″ x 1″	3/4″ x 1″	30	2 to 30	0.5	9,999,999.99	10
WPTN-A-C-04-10	1″	1″	50	3 to 50	0.75	9,999,999.99	10
WPTN-A-C-05-10	1-1/2″	1-1/2″	100	5 to 100	1.5	99,999,999.9	10
WPTN-A-C-01-100	5/8″ x 1/2″	5/8″ x 1/2″	20	1 to 20	0.25	9,999,999.99	100
WPTN-A-C-02-100	5/8″ x 3/4″	5/8″ x 3/4″	20	1 to 20	0.25	9,999,999.99	100
WPTN-A-C-03-100	3/4″ x 1″	3/4″ x 1″	30	2 to 30	0.5	9,999,999.99	100
WPTN-A-C-04-100	1″	1″	50	3 to 50	0.75	9,999,999.99	100
WPTN-A-C-05-100	1-1/2″	1-1/2″	100	5 to 100	1.5	99,999,999.9	100

Dwyer

SERIES UFB

ULTRASONIC FLOWMETER SETS

Non-Invasive Pipe Flow Measurement, Easy Operation

CALIBRATION SERVICES AVAILABLE

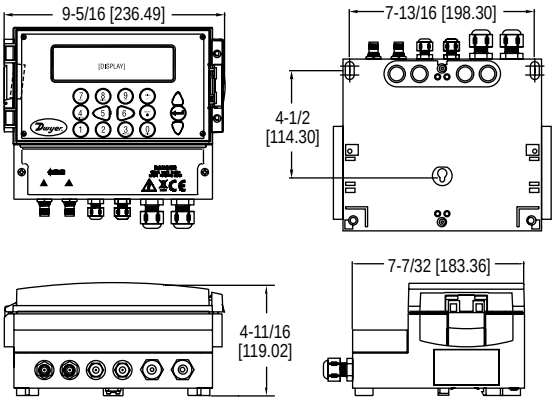

The **Series UFB Ultrasonic Flowmeter Sets** utilize the transit-time difference for measuring flow rates in pipes. These units are permanent mount, where the converters can be mounted on a surface or pipe with a 4-20 mA and pulse output capabilities for pipe sizes from 1/2 to 79″ (13 to 2000 mm).

BENEFITS/FEATURES

- Non-invasive pipe measurement
- Easy-to-use compact and lightweight design, intended for homogeneous liquids that contain no air
- Simple installation with all necessary components included such as converter, sensor, cables and mounting accessories
- Sturdy IP65 rating, protecting it from dust and direct water contact

APPLICATIONS

- Water treatment
- Industrial systems
- Irrigation applications
- Treated water flow
- River water
- Sea water
- Potable water
- Demineralized water
- Glycol/water mix
- Hydraulic system
- Diesel oil
- Water use data logging

KIT INCLUDES

- Converter
- Set of transducers
- Ruled guide rail
- Steel banding
- Banding clips
- Set of transducer cables
- Set of high temperature interface cables
- Ultrasonic coupling grease

MODEL CHART - STANDARD VERSION		
Model	**Pipe Size Range in (mm)**	**Power Supply**
UFB-122	0.5 to 4.5 (13 to 115)	86-264 VAC
UFB-123	2 to 79 (50 to 2000)	86-264 VAC
UFB-222	0.5 to 4.5 (13 to 115)	24 VAC/VDC
UFB-223	2 to 79 (50 to 2000)	24 VAC/VDC

OPTIONS	
Use order code:	**Description**
NISTCAL-FU	NIST traceable calibration certificate

SPECIFICATIONS

Service: Homogeneous liquids that do not contain more than 3% of air bubbles or particulate and capable of ultrasonic wave propagation.
Inputs: TNC cable from sensors.
Range: 0.33 to 33 ft/s (0.1 to 10 m/s).
Display: 240 x 64 pixel graphic display, high contrast black on white with backlight; Languages: English, French, German, Swedish, Italian, Spanish, Portuguese, Russian, Norwegian, and Dutch; 5″ W x 1.3″ H (5 x 33.02 mm).
Accuracy: ±0.5 to ±2% of flow reading of flow rate > 0.03 ft/s (0.01 m/s) and pipe OD > 3.0 in (75 mm); ±3% of flow reading for flow rate > 0.03 ft/s (0.01 m/s) and pipe OD 0.5 to 3 in (13 to 75 mm); ±6% of flow reading for flow rate < 0.03 ft/s (0.01 m/s).
Power Requirements: 86-264 VAC (50 to 60 Hz) or 24 VAC/VDC (1 A max).
Power Consumption: 10.5 W.
Temperature Limits: Transducer: -4 to 275°F (-20 to 135°C); Controller: -4 to 122°F (-20 to 50°C).
Outputs: Analog 1 opto-isolated output: 4-20 mA, 0-16 mA or 0-20 mA (selectable); Error current: 0-26 mA (selectable); Load resistance: 620 Ω max; Alarm: 2 opto-isolated MOSFET NO relays, 48 V at 500 mA, maximum 200 Hz; Pulsed: 1 opto-isolated MOSFET relay, 48 V at 500 mA, 1 to 250 pps; Pulse width: 2 to 500 ms (selectable).
Enclosure Rating: IP65 when using TNC connector; Transducers IP54.
Materials: Plastic ABS and aluminum.
Repeatability: ±0.5 % of measured value or 0.03 ft/s (0.01 m/s).
Electrical Connections: Removable screw-in type terminal block.
Mounting: Wall mounted using 3 type M4 screws.
Turbidity: < 3 % by volume of particulate content.
Permissible Air Content: < 3% by volume.
Response Time: < 500 ms.
Weight: Unit not including accessories: 2.80 lb (1.26 kg); Unit including accessories: 9.92 lb (4.5 kg).
Compliance: CE.

ADDITIONAL SPECIFICATIONS
Applicable Pipe Material: Carbon steel, SS, copper, UPVC/PVDF, concrete, mild steel, glass, brass.
Applicable Pipe Lining: Rubber, glass, concrete, epoxy, steel, other*.
Pipe Wall Thickness: 0.04 to 3″ (1 to 75 mm).
Pipe Lining Thickness: < 1″ (< 25 mm).

*Selectable option for special material with known propagation rate of lining material.

USA: California Proposition 65
⚠**WARNING:** This product can expose you to chemicals including Lead, which is known to the State of California to cause cancer and birth defects or other reproductive harm. For more information go to www.P65Warnings.ca.gov.

Dwyer

SERIES UFM2

COMPACT ULTRASONIC FLOWMETER

Cost Effective, Compact and Adjustable Design, Non-Invasive

CALIBRATION SERVICES AVAILABLE

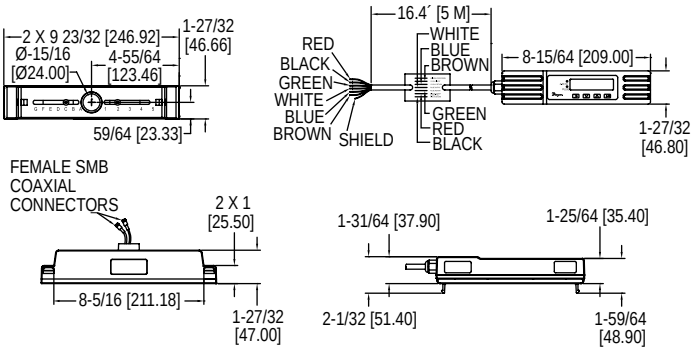

The **Series UFM2 Compact Ultrasonic Flowmeters** are economical, clamp-on, ultrasonic flowmeters. The UFM2 implements the transit-time difference to measure flow rates in pipes and can measure velocity and flow in pipes with outside diameters ranging from 3/4 to 7″ (25 to 180 mm). This model comes with a volume pulse and 4-20 mA flow rate output.

BENEFITS/FEATURES

- Save on installation costs with non-invasive pipe measurement
- Simplified installation with all necessary components included, such as converter, sensor, cables and mounting accessories
- Fit application requirements with compact and lightweight design, that can be easily installed, all in one clamp-on unit intended for homogeneous liquids that contain no air
- Cut down evaluation time with easy-to-read text displaying both flow rate and total with a convenient backlight for visual comfort

APPLICATIONS

- Flow measurement for heat metering
- Metering and monitoring in:
  - Chilled water
  - Potable water
  - Process water

KIT INCLUDES

- Converter with adjustable guiderail
- Set of pipe clamps (model dependent)
- Set of small pipe adaptor circle clamps
- Set of small pipe adaptor V clamps
- Ultrasonic coupling grease

SPECIFICATIONS

Service: Clean water with <3% by volume of particulate content.
Range: 0.33 to 32.8 ft/s (0.1 to 10 m/s).
Display: Backlit: 3.27″ H x 0.74″ W (83.1 mm x 18.8 mm), 2 line x 16 characters.
Accuracy: ±3% of flow reading for >0.98 ft/s (>0.3 m/s).
Power Requirements: 12-24 VDC/VAC.
Power Consumption: 7 W max.
Temperature Limits: Process: 32 to 185°F (0 to 85°C); Ambient: 32 to 122°F (0 to 50°C).
Outputs: Analog: 1 opto-isolated: 4-20 mA; Error current: 3.5 mA; Load resistance: 620 Ω max; Pulse: 1 opto-isolated MOSFET relay, 500 mA max, 166 pps max, 200 Hz max.
Enclosure Rating: IP54.
Enclosure Material: Plastic polycarbonate.
Repeatability: ±0.15% of measured value.
Electrical Connections: 16.4´ (5 m) cable.
Response Time: <1 s.
Weight: 2.9 lb (1.315 kg).
Compliance: CE.

ADDITIONAL SPECIFICATIONS

Applicable Pipe Material: Steel, copper, or plastic.
Pipe Outside Diameter: 3/4 to 7″ (25 to 180 mm)*.
Applicable Pipe Lining: None.
Pipe Wall Thickness: 0.02 to 0.39″ (0.5 to 10 mm).

*Pipe size is dependent on pipe material and internal diameter.

MODEL CHART

Model	Description
UFM2-14	Compact ultrasonic flowmeter, pulse and 4-20 mA outputs, 3/4 to 4″ (25 to 115 mm) pipe
UFM2-16	Compact ultrasonic flowmeter, pulse and 4-20 mA outputs, 5 to 7″ (125 to 180 mm) pipe

OPTIONS

Use order code:	Description
NISTCAL-FU	NIST traceable calibration certificate

MODEL UTG

ULTRASONIC THICKNESS GAGE

Ideal For Use with Ultrasonic Flow Transmitters, Adjustable Sound Velocity

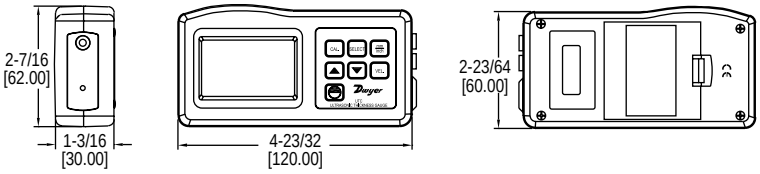

The **Model UTG Ultrasonic Thickness Gage** measures the thickness of a variety of materials. The UTG works on a variety of parallel surface material ranging from 0.05 to 7.9″ (1.2 to 200 mm).

BENEFITS/FEATURES

- Non-invasive thickness measurement
- Reads in inches or millimeters and features an adjustable sound velocity to allow for an array of materials to be measured
- Allows the user to find the wall thickness of the pipe when programming an ultrasonic transmitter without cutting or removing a section of the pipe to measure it
- Ideal for monitoring corrosion in closed vessels such as boilers and chemical tanks and with any ultrasonic flow transmitter

APPLICATIONS

- Pipe thickness measurement
- Finding wall thickness
- Monitoring corrosion in closed vessels
- Industrial applications
- Automotive
- HVAC
- Plumbing

SPECIFICATIONS

Service: Steel, cast iron, aluminum, red copper, brass, zinc, quartz glass, polyethylene, PVC, gray cast iron, nodular cast iron, other. Selectable option for special materials with known sound propagation rate.*
Range: 0.047 to 7.874″ (1.2 to 200 mm).
Accuracy: ±0.5%.
Resolution: 0.001″ / 0.1 mm.
Sound Velocity: 1118 to 20132 mph (500 to 9000 m/s).
Temperature Limits: 32 to 122°F (0 to 50°C).
Humidity Limit: < 80%.
Display: 4 digits, 0.394″ (10 mm) LCD.
Power Requirement: (4) 1.5 V AAA alkaline batteries, not included, user replaceable.
Weight: 5.78 oz (164 g).

*Material must be uniform with minimal coating/paint.

MODEL CHART

Model	Description
UTG	Ultrasonic thickness gage

USA: California Proposition 65
WARNING: This product can expose you to chemicals including Lead, which is known to the State of California to cause cancer and birth defects or other reproductive harm. For more information go to www.P65Warnings.ca.gov.

Dwyer

SERIES PUB & PUF

PORTABLE ULTRASONIC FLOWMETER KITS

Portable, Non-Invasive and Data Logging Option

CALIBRATION SERVICES AVAILABLE

PUB

PUF

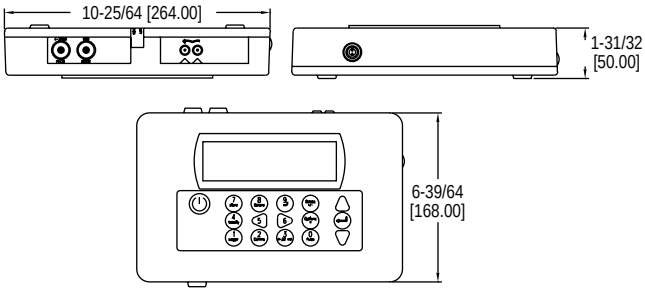

The **Series PUB & PUF Portable Ultrasonic Flowmeter Kits** utilize the transit-time difference for measuring flow rates in pipes non-invasively. Units offer flow rate local display with analog and pulsed outputs. The Series PUF offers the same features plus data logging capability.

BENEFITS/FEATURES
- Non-invasive pipe measurement
- Compact and lightweight
- Incorporate the latest electronics and signal processing technologies realizing high performance and easy operation
- Ideal for on-the-go flow monitoring, capable of 20 hours continuous operation with built-in, rechargeable battery
- Easy to read graphic display with convenient backlight for visual comfort
- Efficient layout of the function keys for easy to use programming
- PUB features rugged carrying case with molded foam inserts
- PUF boasts an IP67 rated case to hold and protect all equipment conveniently

APPLICATIONS
- Water treatment
- Industrial systems
- Irrigation applications
- Treated water flow
- River water
- Sea water
- Potable water
- Demineralized water
- Glycol/water mix
- Hydraulic system
- Diesel oil
- Water use data logging

KIT INCLUDES
- Converter
- Set of transducers
- Transducer holders
- Set of transducer cables (6.56´ (2 m))
- 4-20 mA communication cables
- 12 VDC power supply
- Ultrasonic coupling grease
- Set of chains
- Ruled guide rail
- Test block
- Carrying case

MODEL CHART - STANDARD VERSION	
Model	**Pipe Size Range in (mm)**
PUB-20	2 to 40 (50.7 to 1016)

MODEL CHART - DATA LOGGING VERSION	
Model	**Pipe Size Range in (mm)**
PUF-1001	0.5 to 78 (13 to 2000)
PUF-1002	0.5 to 4.5 (13 to 115)

OPTIONS	
Use order code:	**Description**
NISTCAL-FU	NIST traceable calibration certificate

SPECIFICATIONS

Service: Homogeneous liquids that do not contain air bubbles capable of ultrasonic wave propagation.
Inputs: Lemo connector cable from sensors.
Range: 0.33 to 65.62 ft/s (0.1 to 20 m/s).
Display: 240 x 64 pixel graphic display, high contrast black on white with backlight; Languages: English, French, German, Swedish, Italian, Spanish, Portuguese, Russian, Norwegian, and Dutch; 5.2″ W x 1.5″ H.
Accuracy: ±0.5 to 2% of flow reading for flow rate > 0.66 ft/s (0.2 m/s) and pipe ID > 2.95 in (75 mm); ±3% of flow reading for flow rate > 0.66 ft/s (0.2 m/s) and pipe ID in range 0.512 to 2.95″ (13 to 75 mm); ±6% of flow reading for flow rate < 0.66 ft/s (0.2 m/s).
Power Requirements: 9-24 VDC, (1) 5-Cell NiMH battery, internal, factory replaceable (continuous operation time: 20 hours with back-light and output off) (recharging time: 6.5 hours, power adaptor used).
Power Consumption: 10.5 W.
Power Adaptor: 110/240 VAC adaptor. UK,US, European adaptors included.
Temperature Limits: -4 to 275°F (-20 to 135°C).
Outputs: Analog: 1 opto-isolated output: 4-20 mA, 0-16 mA or 0-20 mA (selectable); Error current: 0-26 mA (selectable); Load resistance: 620 Ω max; Pulse: 1 opto-isolated MOSFET relay, 150 mA max, 500 pps max, 200 Hz max.
Serial Communications: USB; RS-232 (PUF only).
Enclosure Rating: Converter: IP54; Transducers: IP51.
Materials: Flame retardant injection molded ABS plastic.
Repeatability: ±0.5 % of measured value or ±0.066 ft/s (0.02 m/s).
Electrical Connections: Multi-pin Lemo plugs.
Turbidity: < 3% by volume of particulate content.
Permissible Air Content: < 3% by volume.
Response Time: < 500 ms.
Weight: Unit without accessories: 2.3 lb (1.06 kg); Unit with accessories in carrying case: 13.23 lb (6.0 kg).
Compliance: CE.

ADDITIONAL SPECIFICATIONS
Applicable Pipe Material: Carbon steel, SS, copper, UPVC/PVDF, concrete, galvanized steel, mild steel, glass, brass.
Applicable Pipe Lining: Rubber, glass, concrete, epoxy, steel, other*.
Pipe Wall Thickness: 0.04 to 3″ (1 to 75 mm).
Pipe Lining Thickness: < 1″ (< 25 mm).

*Selectable option for special material with known propagation rate of lining material.

USA: California Proposition 65
⚠**WARNING:** This product can expose you to chemicals including Lead, which is known to the State of California to cause cancer and birth defects or other reproductive harm. For more information go to www.P65Warnings.ca.gov.

CLAMP-ON ULTRASONIC THERMAL ENERGY METER

NEMA 4 Enclosure with Integral Mounting Bracket

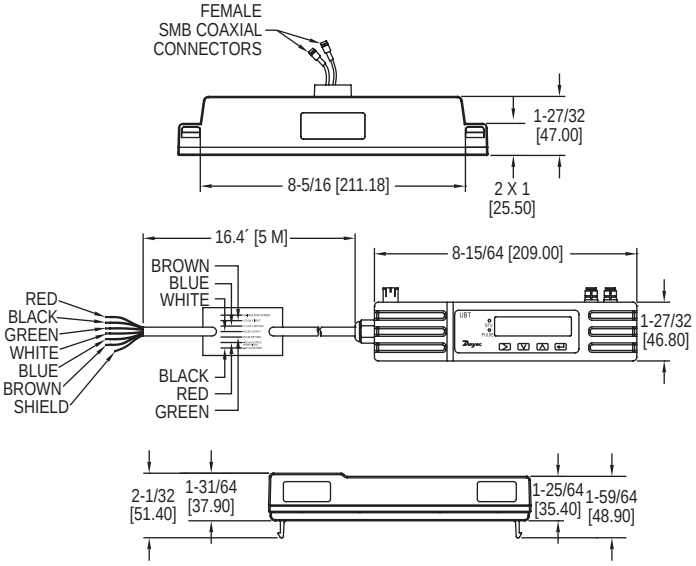

The **Series UBT Clamp-On Ultrasonic Thermal Energy Meter** is an economical clamp-on ultrasonic heat meter. It is an ultrasonic alternative to the traditional inline thermal energy meters. The series uses temperature sensors for energy measurement and ultrasonic waves with time differentials for flow measurement.

BENEFITS/FEATURES

- Save on installation costs with non-invasive pipe measurement
- Simplified installation with all necessary components included, such as converter, sensor, cables and mounting accessories
- Fit application requirements with compact and lightweight design, that can be easily installed, all in one clamp-on unit intended for homogeneous liquids that contain no air
- Cut down evaluation time with easy-to-read text displaying both energy rate and totalized energy with pulse output and communication options with a convenient backlight for visual comfort

APPLICATIONS

- Building services
- Energy management
- Heat/energy metering for energy management or building services utilizing chilled water circuits

MODEL CHART

Model	Description
UBT-14	Clamp-on ultrasonic thermal energy meter, 3/4 to 4˝ (25 to 115 mm) pipe size
UBT-16	Clamp-on ultrasonic thermal energy meter, 5 to 7˝ (125 to 180 mm) pipe size
UBT-24	Clamp-on ultrasonic thermal energy meter with pulse and Modbus® communication output, 3/4 to 4˝ (25 to 115 mm) pipe size
UBT-26	Clamp-on ultrasonic thermal energy meter with pulse and Modbus® communication output, 5 to 7˝ (125 to 180 mm) pipe size

SPECIFICATIONS

Service: Clean water with <3% by volume of particulate content, or up to 30% ethylene glycol.
Range: 0.3 ft/s to 32 ft/s (0.1 m/s to 10 m/s).
Display: Backlit: 2.28˝ x 0.43˝ (58 mm x 11 mm), 2 line x 16 characters.
Accuracy: ±3% of flow reading for velocity rate >1 ft/s (0.3 m/s).
Power Requirements: 12 V to 24 V ±10% AC/DC at 7 watts per unit. Optional plug-in 12 V power supply.
Power Consumption: 7 W (DC) or 7 VA (AC) max.
Temperature Limits: Process: 32 to 185°F (0 to 85°C); Ambient: 32 to 122°F (0 to 50°C).
Outputs: Pulse: 1 optoisolated MOSFET relay, 500 mA max, 166 pps max, 200 Hz max.
Humidity Limit: 90% RH at 122°F (50°C) max.
Communication: Pulse, Optional Modbus® communication.
Enclosure Rating: IP54.
Enclosure Material: Plastic polycarbonate.
Repeatability: ±0.15% of measured value.
Electrical Connections: 16.4´ (5 m) cable.
Flow Direction: Any.
Mounting Orientations: Any.
Weight: 1.10 lb (0.5 kg).
Agency Approvals: CE.

ADDITIONAL SPECIFICATIONS

Applicable Pipe Material: Steel, SS, copper, or plastic.
Pipe Outside Diameter: 3/4 to 4˝ (25 to 115 mm); 5 to 7˝ (125 to 180 mm).*
Applicable Pipe Lining: None.
Pipe Wall Thickness: 0.02 to 0.36˝ (0.5 to 10 mm).

*Pipe size is dependent on pipe material and internal diameter.

Modbus® is a registered trademark of Schneider Automation, Inc.

Dwyer

SERIES MFS & MFS2

MAGNETIC INDUCTIVE FLOW SENSORS

No Moving Parts, Frequency and 4-20 mA Output, Maintenance-Free

MFS

Model	L1	L2	D1	D2
MFS2-1	4″	0.86″	1/2-14″ NPT	0.31″
MFS2-2	4″	0.86″	1/2-14″ NPT	0.31″
MFS2-3	4.02″	0.86″	3/4-14″ NPT	0.55″
MFS2-4	4.41″	1.04″	1-11.5″ NPT	0.71″
MFS2-5	4.41″	1.04″	1-11.5″ NPT	0.71″
MFS2-6	4.81″	1.13″	1-1/4-11.5″ NPT	0.98″

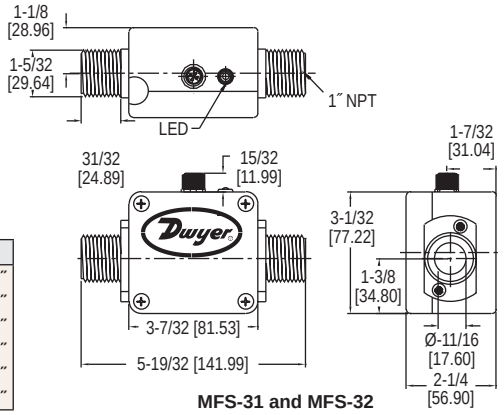

MFS-31 and MFS-32

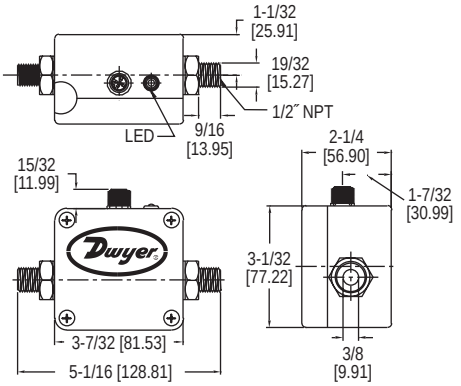

MFS-11 and MFS-12
MFS-21 and MFS-22

MFS2

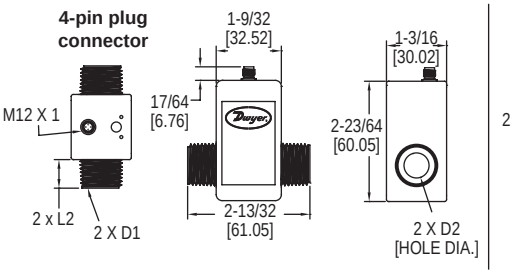

MFS2-6

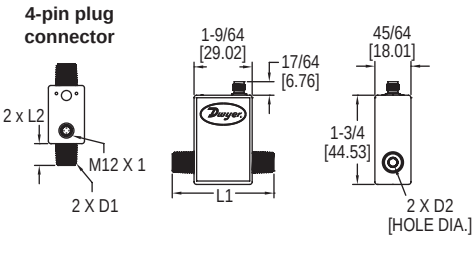

MFS2-1/5

The **Series MFS & MFS2 Magnetic Inductive Flow Sensors** are compact, 316 SS body, in line flowmeters with pulse and optional analog 4-20 mA output. It is available in a variety of flow ranges from 0.25 to 52.8 GPM (1 to 200 LPM) and process connection sizes of 1/2″ and 1″ NPT.

BENEFITS/FEATURES

- Long life cycle with no moving parts to wear or break
- Can be applied in applications dealing with contaminated media with no mechanical component in the flow
- Obstruction free pipe cross-section yields low pressure drop
- Unaffected by change in temperature, density, viscosity or concentration

APPLICATIONS

- Contaminated liquid flow monitoring
- Flow of conductive liquids
- Water and wastewater treatment
- Industrial systems
- Irrigation applications

SPECIFICATIONS

Service: Compatible, non-coating, conductive liquids.
Range: See model chart.
Wetted Materials: Electrodes: 316 SS; Process connections: MFS: 316 SS; MFS2: PVDF; Measuring pipe: MFS: PEEK-GF30; Gasket: EPDM.
Accuracy: MFS: ±2% of reading; MFS2: ±1% or reading.
Repeatability: 1%.
Temperature Limits: MFS: Process: 32 to 194°F (0 to 90°C); Ambient: 41 to 158°F (5 to 70°C); MFS2: Process: 14 to 140°F (-10 to 60°C); Ambient: 41 to 140°F (5 to 60°C).
Pressure Limits: MFS: 232 psi (16 bar); MFS2: 145 psi (10 bar) @ 68°F (20°C); 116 psi (8 bar) @ 104°F (40°C); 87 psi (6 bar) @ 140°F (60°C).
Response Time: MFS: < 500 ms; MFS2:< 100 ms.
Power Requirements: 24 VDC ±10%.
Power Consumption: 0.6 W.
Output: Frequency: Square-wave, NPN or PNP; Analog: 4-20 mA.
Loop Resistance: 250 Ω.
Current Consumption: Max 80 mA.
Minimum Conductivity of Medium: 50 µS/cm.
Flow Indication: LED green, flow proportional blinking.
Enclosure Rating: NEMA 4 (IP65).
Process Connection: See model chart.
Electrical Connection: Plug connector M12x1.
Weight: MFS-1X: 1.5 lb (0.68 kg); MFS-2X: 1.7 lb (0.77 kg); MFS-3X: 1.9 lb (0.87 kg); MFS2-1, -2, -3, -4, -5: 8 oz (226.8 g); MFS2-6: 1 lb (0.45 kg).

MODEL CHART

Model	Range GPM (LPM)	Minimum Output Signal GPM (LPM)	Process Connection	Output
MFS-11	0.25 to 5.3 (1 to 20)	0.13 (0.5)	1/2″ NPT	Frequency
MFS-21	0.5 to 10.5 (2 to 40)	0.25 (1)	1/2″ NPT	Frequency
MFS-31	2.5 to 52.8 (10 to 200)	1.3 (5)	1″ NPT	Frequency
MFS-12	0.25 to 5.3 (1 to 20)	0.13 (0.5)	1/2″ NPT	Frequency and analog

MODEL CHART

Model	Range GPM (LPM)	Process Connection	Output
MFS2-1	0.07 to 1.3 (0.25 to 5)	1/2″ male NPT	Frequency
MFS2-2	0.26 to 5.3 (1.0 to 20)	1/2″ male NPT	Frequency
MFS2-3	0.66 to 13.2 (2.5 to 50)	3/4″ male NPT	Frequency
MFS2-4	1.3 to 26.4 (5.0 to 100)	1″ male NPT	Frequency
MFS2-5	2.6 to 52.8 (10 to 200)	1″ male NPT	Frequency
MFS2-6	3.3 to 66.0 (12.5 to 250)	1-1/4″ male NPT	Frequency

ACCESSORIES

Model	Description
MFS-C3	4 pin cable socket M12x1 connect, 9.8 ft (3 m)
MFS-C5	4 pin cable socket M12x1 connect, 16.4 ft (5 m)
MFS-C10	4 pin cable socket M12x1 connect, 32.8 ft (10 m)

MFS-X 4 pin cable

Dwyer

SERIES IEF

INSERTION ELECTROMAGNETIC FLOW TRANSMITTER

Field Configurable, High Accuracy, BACnet or Modbus® Protocol

CALIBRATION SERVICES AVAILABLE

DEALER DESIGN AWARDS

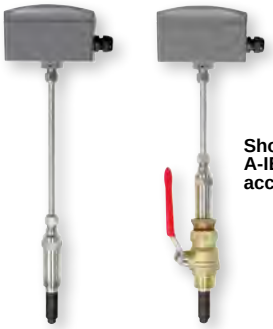

Shown with A-IEF-VLV-BR** accessory valve kit

-LCD option shown

A-IEF-KIT

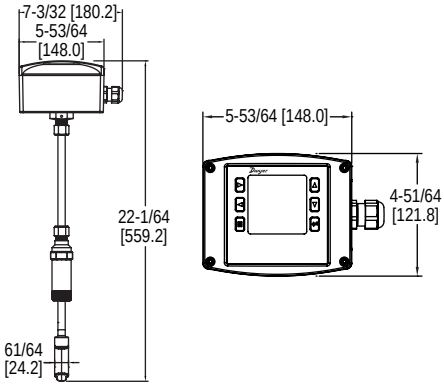

The **Series IEF Insertion Electromagnetic Flow Transmitter** is an adjustable insertion flowmeter featuring electromagnetic technology that accurately and reliably measures fluid velocity in addition to providing several continuous signal outputs. This series is specifically designed to offer superior performance paired with simple installation and use. One unit is adjustable to fit pipe sizes from 4 to 36˝ (102 to 914 mm), and offers several output options including selectable BACnet MS/TP or Modbus® RTU communications protocol over 2-wire RS-485 in addition to the standard analog, frequency and alarm outputs.

BENEFITS/FEATURES

- Meet application requirements with field configurable setup displays (-LCD integral option or remote accessory A-IEF-DSP), which accommodate a variety of application configurations with one model through multiple display configurations i.e. pipe size, pipe material, liquid type, analog output, pulse/frequency output, alarm outputs, communication outputs, damping, and calibration factor
- Maintain system efficiency with high performance accuracy that is maintained through changes in temperature, density or viscosity
- Quick and easy ordering and set up with Setup Wizard and installation tool that are simple to use and allow for precise installation
- Save time with accessory setup kit A-IEF-KIT that ensures exact installation application depth with included thickness gage and measuring tape
- Reduced costs, long product life, and minimal maintenance requirements with no moving parts to wear or break and electrodes that discourage fouling
- Minimize installation costs with isolation valve accessory options to allow for installation in operational systems via hot-tap kit or easy removal without system downtime
- Required documents included with NIST traceable pass/fail verification certificate included standard for Carbon Steel Schedule 40 pipes sized 4˝ (102 mm), 6˝ (150 mm), 8˝ (200 mm)

APPLICATIONS

- Boiler feed water
- Chilled water
- Open and closed loop condenser water
- Irrigation system
- Process and coolant flow
- Ground water remediation
- Chemical processing
- Pump protection
- Wastewater
- Mining

SPECIFICATIONS

Service: Compatible clean or dirty non coating, conductive liquids.
Range: 0 to 20 ft/s (0 to 6 m/s).*
Wetted Materials: Body shaft/fitting: 316 SS; Electrodes: 316 SS; Electrode cap: Polymer/Polystyrene; O-ring: Silicon.
Accuracy: High accuracy units: ±0.5% of reading at calibrated velocity; ±1% of reading from 2 to 20 ft/s (0.6 to 6 m/s); ±0.02 ft/s (±0.006 m/s) at < 2 ft/s (0.6 m/s); Standard accuracy units: ±1% FS.
Temperature Limits: Ambient: -20 to 160°F (-29 to 71°C); Process: 15 to 250°F (-9 to 121°C); Storage: -40 to 185°F (-40 to 85°C).
Process Connection: 1˝ NPT or BSPT with accessory full port ball valve options.
Pressure Limits: 400 psi (27.6 bar) @ 100º F (37.8°C).
Pressure Drop: < 0.1 psi at 12 ft/s in 4˝ (101.6 mm) and larger pipe.
Outputs:
(1) Analog: 4-20 mA, 0-5 V, 0-10 V or 2-10 V (display selectable);
(1) Pulse/Frequency: 0-15 V peak pulse, 0 to 500 Hz or scalable pulse output (display selectable);
(2) Alarm: (1) Empty pipe detection or minimum/maximum velocity, (display selectable); (1) Reverse flow output indication.
Power Requirements: 12-42.4 VDC, .25 A @ 24 VDC; 12-36 VAC.

Electrical Connection: Removable terminal blocks, model selectable 1/2˝ female NPT conduit connection, PG 16 gland or PG 16 gland with (2) 10 ft (3 m) 9 conductor 22 AWG plenum rated cables, accessory cable lengths up to 200 ft (61 m) optional.
Display (-LCD option): 2˝ (5.08 cm) x 2˝ (5.08 cm) graphic LCD with backlight.
Conductivity: >20 microsiemens.
Enclosure Material: Powder coated die cast aluminum.
Enclosure Ratings: NEMA 6P (IP68) (Non display models); NEMA 4X (IP66) (-LCD option).
Compliance: BTL, CE.

COMMUNICATIONS (-COM OPTION)
Type: BACnet MS/TP or Modbus® RTU communication protocol (default disabled, display selectable).
Supported Baud Rates: 9600, 19200, 38400, 57600, 76800, or 115200 bps (display selectable).
Device Load: 1/8 unit load.

ADDITIONAL SPECIFICATIONS
Applicable Pipe Material: Most popular plastic and metal pipes; i.e. Carbon steel, SS, copper, UPVC/PVDF, galvanized steel, mild steel, and brass.
Applicable Pipe Size: 4-36˝ (101 to 914 mm), model dependent. See model chart.
Diameter Length Requirements: >10 upstream; >5 downstream.
Glycol: 0 to 100% display selectable.

*For max flowrates >10 ft/s (3 m/s) order option -CC.

MODEL CHART

Example	IEF	-H	N	-CND	-LCD	IEF-HN-CND-LCD
Series	IEF					Insertion electromagnetic flow transmitter
Accuracy		L G S F I E T H				Standard accuracy 4 to 10˝ (200 to 250 mm) pipe; 1% FS Standard accuracy > 10 to 36˝ (250 to 900 mm) pipe; 1% FS Standard accuracy 4 to 36˝ (100 to 900 mm) pipe; 1% FS High accuracy 4˝ (100 mm) pipe; 1% of reading High accuracy 6˝ (150 mm) pipe; 1% of reading High accuracy 8˝ (200 mm) pipe; 1% of reading High accuracy 10˝ (250 mm) pipe; 1% of reading High accuracy 4 to 10˝ (100 to 250 mm) pipe; 1% of reading
Process Connection			N B			1˝ male NPT 1˝ male BSPT
Housing Electrical Connection				CND PG 10		1/2˝ female NPT conduit connection without cable PG gland without cable PG gland with 10´ (3 m) cable
Options					CC COM FC LCD NIST	Custom configured for specific installation BACnet or Modbus® communication protocol (display selectable) Factory calibration certificate for 0.5% of reading at single point Integral LCD display Six point NIST traceable calibration certificate

Note: For CC option, must provide completed configuration paperwork.
Note: For maximum performance select -LCD option or setup display accessory.

ACCESSORIES

Model	Description
A-IEF-CBL-50	Plenum rated cable 50 ft (15.2 m)
A-IEF-DSP	Setup display
A-IEF-KIT	Setup kit (includes setup display, thickness gage and measuring tape), and universal power adaptor
A-IEF-PA	AC wall adaptor
A-IEF-VLV-BR	1-1/4˝ full port isolation valve brass kit
A-IEF-VLV-SS	1-1/4˝ full port isolation valve 316 SS kit

Modbus® is a registered trademark of Schneider Electric USA, Inc.

A-IEF Remote Display now available: See page 293

Dwyer

SERIES IEFB

INSERTION THERMAL ENERGY METER

Field Adjustable, BACnet/Modbus® Outputs

CALIBRATION SERVICES AVAILABLE

IEFB-X-X-TXX

IEFB-X-X-TXX Shown with A-IEF-VLV-BR accessory valve

-LCD option

A-IEFB-THW-XX (2)

Hot-tap thermowells for model IEFB-X-X-RXX (2) shown with A-IEFB-VLV-BR-1 accessory valve

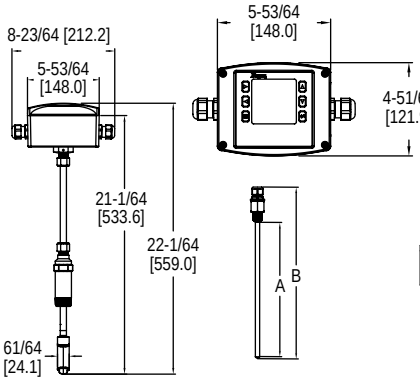

A-IEFB-THW-XX (2)

IEFB-X-X-RXX (2)

THERMOWELL MODEL CHART		
Model	**A**	**B**
A-IEFB-THW-4	4-11/16″ [119.0 mm]	5-25/32 [146.8 mm]
A-IEFB-THW-6	6-11/16″ [169.8 mm]	7-25/32 [197.6 mm]

The **Series IEFB** is a field-adjustable insertion thermal energy meter that uses electromagnetic technology to accurately and reliably measure fluid velocity and energy consumption. The high accuracy IEFB is adjustable to fit pipe sizes from 4 to 10″ (100 to 250 mm), while the standard accuracy IEFB fits pipe sizes 4 to 36″ (100 to 900 mm). The energy meter is simple to install and incorporates a temperature meter and calculator into a single unit. The IEFB incorporates a temperature meter and a calculator into a single unit. The LCD display provides clear readings of the meter's values, including temperature and energy consumption, making it ideal for installation on chillers, boilers, and other heating and cooling applications. The high measuring accuracy and long lifetime keeps annual operating costs at a minimum. In addition, it offers several output options, including selectable BACnet MS/TP or Modbus® RTU communications protocol over 2-wire RS-485 and standard analog, frequency, and alarm outputs.

BENEFITS/FEATURES

- Save time and reduce installation costs with flow, temperature sensors and calculator delivered in one preprogrammed, complete package.
- Maintain system energy efficiency with high performance accuracy that is maintained through changes in temperature, density or viscosity per universally accepted standard
- Meet application requirements with field configurable setup displays (-LCD integral option or remote accessory A-IEF-DSP), which accommodate a variety of application configurations with one model through multiple display configurations i.e. pipe size, pipe material, liquid type, analog output, pulse/frequency output, alarm outputs, communication outputs, damping, and calibration factor
- Quick and easy ordering and set up with Setup Wizard and installation tool that are simple to use and allow for precise installation
- Save time with accessory setup kit A-IEF-KIT that ensures exact installation application depth with included thickness gage and measuring tape
- Reduced costs, long product life, and minimal maintenance requirements with no moving parts to wear or break and electrodes that discourage fouling
- Minimize installation costs with isolation valve accessory options to allow for installation in operational systems via hot-tap kit or easy removal without system downtime
- Required documents included with NIST traceable pass/fail verification certificate included standard for Carbon Steel Schedule 40 pipes sized 4″ (102 mm), 6″ (150 mm), 8″ (200 mm)

APPLICATIONS

- Monitoring chiller cooling output performance
- Industrial boiler heating performance
- Energy efficiency monitoring
- Optimization of heat energy performance
- Commercial and residential heat energy consumption and metering
- District heating and cooling monitoring
- Energy cost allocation monitoring

SPECIFICATIONS

Service: Compatible clean or dirty non coating, conductive liquids.
Range: 0 to 20 ft/s (0 to 6 m/s).*
Wetted Materials: Body shaft/fitting: 316 SS; Electrodes: 316 SS; Electrode cap: Polymer/polystyrene; O-ring: Silicone; Thermowells: 304 SS.
BTU Accuracy per EN1434/ASTM E3137/CSA C900.1-13: High accuracy units: Class 2 for 2 to 20 ft/s (0.6 to 6 m/s)**; Standard accuracy units: Class 3 for 6.5 to 20 ft/s (2 to 6 m/s)**.
Flow Sensor Accuracy: High accuracy units: ±0.5% of reading at calibrated velocity, ±1% of reading from 2 to 20 ft/s (0.6 to 6 m/s) ±0.02 ft/s (±0.006 m/s) at < 2 ft/s (0.6 m/s); Standard accuracy units: ±1% FS.
Temperature Accuracy: Class B ±(0.30 + 0.005*t)°C per EN60751.
Differential Temperature Accuracy: Et = ±(0.5 +3*ΔΘmin/ΔΘ) % per EN1434.
Calculator Accuracy: Ec = ±(0.5 +ΔΘmin/ΔΘ) % per EN1434.
Temperature Compensation: 140 to 220°F (60 to 104.4°C) < 2% error over ±30°F (-1.1 °C) change, 40 to 70°F (4.4 to 21.1°C) < 2% error over ±10°F (-12.2°C) change.
Temperature Limits: Ambient: -20 to 160°F (-29 to 71°C)**; LCD -4 to 158°F (-20 to 70°C); Process: 15 to 250°F (-9 to 121°C); Storage: -40 to 185°F (-40 to 85°C).
Process Connection: Flowmeter: 1″ NPT or BSPT with accessory full port ball valve options; Thermowell: (2) 1/2″ NPT or BSPT thermowell with 1″ full port ball valve options.
Pressure Limit: 400 psi (27.6 bar) @ 100°F (37.8°C).
Pressure Drop: < 0.1 psi at 12 ft/s in 4″ (<0.01 bar at 3.7 m/s in 100 mm) and larger pipe.
Outputs: (1) Analog: 4-20 mA, 0-5 V, 0-10 V or 2-10 V (display selectable); (1) Pulse/Frequency: 0-15 V peak pulse, 0 to 500 Hz or scalable pulse output (display selectable); (2) Alarm: Empty pipe detection or minimum/maximum velocity, (display selectable) and reverse flow output indication.
Power Requirements: 12-42 VDC, .25 A @ 24 VDC; 12-36 VAC.
Electrical Connection: Removable terminal blocks, (2) model selectable 1/2″ female NPT conduit connection, (2) PG 16 gland or (2) PG 16 gland with 10 ft (3 m) 9 conductor 22 AWG plenum rated cables, accessory cable lengths up to 200 ft (61 m) optional.
Display (-LCD option): 2 x 2″ (50 x 50 mm) graphic LCD with backlight.
Conductivity: >20 microsiemens.
Enclosure Material: Powder coated die cast aluminum.
Enclosure Ratings: NEMA 6P (IP68) (Non display models); NEMA 4X (IP66) (-LCD option).
Compliance: BTL.

COMMUNICATIONS (-COM OPTION)
Type: BACnet MS/TP or Modbus® RTU communication protocol (default disabled, display selectable).
Supported Baud Rates: 9600, 19200, 38400, 57600, 76800, or 115200 bps (display selectable).
Device Load: 1/8 unit load.

ADDITIONAL SPECIFICATIONS
Applicable Pipe Material: Most popular plastic and metal pipes; i.e. Carbon steel, SS, copper, UPVC/PVDF, galvanized steel, mild steel, and brass.
Applicable Pipe Size: 4 to 36″ (100 to 900 mm), model dependent. See model chart.
Diameter Length Requirements: >10 upstream, >5 downstream.
Temperature Resistance: Matched 4 wire platinum RTD's.
Relative Humidity: 10 to 90% non-condensing.
Output Impedance: 4-20 mA: 536 Ω; 5V: 500 Ω; 10V: 1.27k Ω.

*For max flowrates >10 ft/s (3 m/s) order option -CC.
**Verified at standard temperature 73.4°F (23°C) refer to listed standards for detailed accuracy formulations.

Dwyer

SERIES IEFB

INSERTION THERMAL ENERGY METER

Field Adjustable, BACnet/Modbus® Outputs

CALIBRATION SERVICES AVAILABLE

MODEL CHART							
Example	**IEFB**	**-L**	**N**	**-CND**	**-R10**	**-LCD**	**IEFB-LN-CND-R10-LCD**
Series	IEFB						Insertion thermal energy meter
Accuracy		L G S F I E T H					Standard accuracy 4 to 10″ (200 to 250 mm) pipe; 1% FS Standard accuracy > 10 to 36″ (250 to 900 mm) pipe; 1% FS Standard accuracy 4 to 36″ (100 to 900 mm) pipe; 1% FS High accuracy 4″ (100 mm) pipe; 1% of reading High accuracy 6″ (150 mm) pipe; 1% of reading High accuracy 8″ (200 mm) pipe; 1% of reading High accuracy 10″ (250 mm) pipe; 1% of reading High accuracy 4 to 10″ (100 to 250 mm) pipe; 1% of reading
Process Connection			N B				1″ Male NPT 1″ Male BSPT
Housing Electrical Connection				CND PG 10			1/2″ female NPT PG 16 gland without cable PG 16 gland with (2) 10′ (3 m) cables
Temperature Sensors					T10 T20 T50 R10 R20 R50		(2) 10′ (3 m) PT temperature sensors* (2) 20′ (6 m) PT temperature sensors* (2) 50′ (15 m) PT temperature sensors* (2) 10′ (3 m) PT temperature sensors with hot-tap thermowells (2) 20′ (6 m) PT temperature sensors with hot-tap thermowells (2) 50′ (15 m) PT temperature sensors with hot-tap thermowells
Options						CC COM FC LCD NIST	Custom configuration (required input) BACnet or Modbus® communications protocol (display selectable) Factory calibration certification for 0.5% of reading at single point Integral LCD display NIST traceable calibration certification for flow and temperature
*Thermowells not included. Refer to accessories model chart to purchase permanent thermowells.							
Note: For maximum performance select -LCD option or setup display accessory.							

ACCESSORIES	
Model	**Description**
A-IEF-DSP	Setup display
A-IEF-KIT	Setup kit (includes setup display, thickness gage, and measuring tape) and universal power adaptor
A-IEF-VLV-BR†	1-1/4″ full port isolation valve brass kit**
A-IEF-VLV-SS†	1-1/4″ full port isolation valve 316 SS kit
Thermowells	
A-IEFB-THW-4	(2) 1/2″ NPT, 4″ thermowell for 4 to 7″ pipe
A-IEFB-THW-4-BSPT	(2) 1/2″ BSPT, 4″ thermowell for 4 to 7″ pipe
A-IEFB-THW-6	(2) 1/2″ NPT, 6″ thermowell for ≥ 8″ pipe
A-IEFB-THW-6-BSPT	(2) 1/2″ BSPT, 6″ thermowell for ≥ 8″ pipe
Hot-Tap Valves	
A-IEFB-VLV-BR-1†	(2) 1″ NPT full port isolation valve brass for temperature sensor with 1″ branch outlet and 1″ nipple**
A-IEFB-VLV-SS-1†	(2) 1″ NPT full port isolation valve 316 SS for temperature sensor with 1″ branch outlet and 1″ nipple
**Brass fittings and pipe are not to be used with NSF Certified models. Brass valves are non-RoHS compliant. †BSPT valves also available.	

Modbus® is a registered trademark of Schneider Electric USA, Inc.

SERIES A-IEF

REMOTE DISPLAY FOR SERIES IEF AND IEFB

Convenient Access to IEF and IEFB Meter Readings

Full functional display
A-IEF-FDSP-RM

Indicator display
A-IEF-IDSP-RM

Shown with IEF-HN-PG and
A-IEF-VLV-BR accessory valve

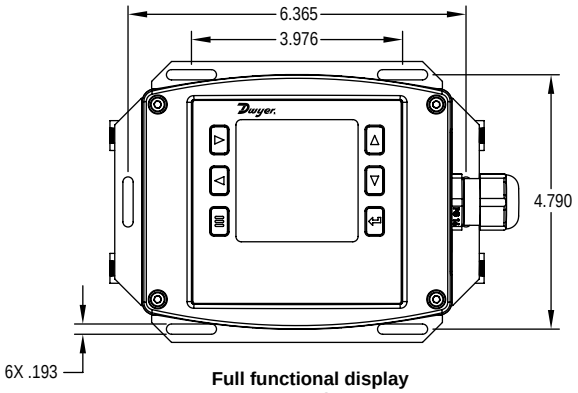

Full functional display
A-IEF-FDSP-RM

The **Series A-IEF Remote Display** can be installed almost anywhere near a Series IEF flow transmitter or IEFB thermal energy meter. Both the indicator display (A-IEF-IDSP-RM) and the full functional display (A-IEF-FDSP-RM) have a maximum display cable length of 100 ft (30 m) to permit easy viewing of flow readings. The full functional display allows for convenient adjustment of configuration settings and allows the user to save the IEF or IEFB configuration settings to a computer for printing.

BENEFITS/FEATURES
- Full functional display can be used to set up the IEF/IEFB and adjust the settings if it is installed in a hard-to-reach location
- Indicator display makes it convenient to read process values if the meter is inaccessible
- Varying cable lengths of up to 100 ft (30 m) allows for flexible installation on a wall or pipe mount
- Easy to install and wire in the field

APPLICATIONS
- Mechanical rooms with a small footprint
- Hard-to-reach piping
- Boilers and chillers
- Chilled water
- Condenser water
- Make-up water
- Heating water
- Boiler feed water
- Steam condensate

SPECIFICATIONS
Temperature Limits: Ambient: -4 to 158°F (-20 to 70°C); Storage: -40 to 185°F (-40 to 85°C). **Display:** 3.3″ diagonal graphic LCD. Backlight (full functional display only). **Enclosure Material Housing:** Powder coated die cast aluminum. **Enclosure Rating:** NEMA 4X (IP66). **Electrical Connection:** Removable terminal blocks, #22 AWG (100 ft (30 m) max). **Mounting:** Wall or pipe mount. **Mounting Orientation:** Any orientation. **Weight:** 2.46 lbs (1.12kg). **Compliance:** CE.

MODEL CHART	
Model	**Description**
A-IEF-IDSP-RM	A-IEF-DSP-RM indicator remote display
A-IEF-FDSP-RM	A-IEF-DSP-RM full functional remote display

ACCESSORIES	
Model	**Description**
A-IEF-CBL-50	Plenum rated cable 50 ft (15.2 m)

Dwyer
SERIES TUF

ULTRASONIC ENERGY METERS

Flow and Temperature Monitoring Capability, Modbus® or BACnet Communication

TUF-150/400

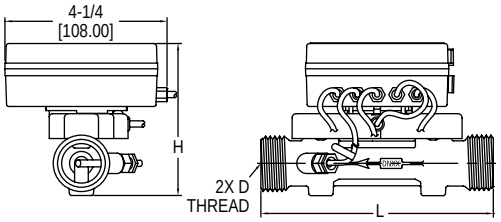

DIMENSIONS in [mm]			
Model	**L**	**D**	**H**
TUF-150-XX	4-21/64 [110.00]	G3/4B	3-31/32 [101.00]
TUF-200-XX	5-1/8 [130.00]	G1B	3-31/32 [101.00]
TUF-250-XX	6-19/64 [160.00]	G11/4B	4-11/64 [106.00]
TUF-320-XX	7-3/32 [180.00]	G11/2B	4-29/64 [113.00]
TUF-400-XX	7-7/8 [200.00]	G2B	4-49/64 [121.00]

TUF-500

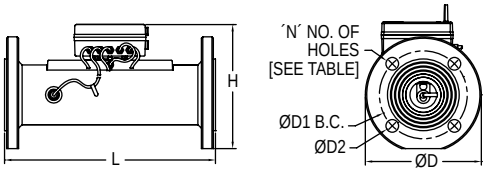

DIMENSIONS in [mm]						
Model	**L**	**ØD**	**H**	**ØD1**	**ØD2**	**N**
TUF-500-XX	7-7/8 [200]	6-1/2 [165.00]	9-27/32 [250]	4-59/64 [125.00]	45/64 [18.00]	4
TUF-650-XX	7-7/8 [200]	7-9/32 [185.00]	10-7/16 [265]	5-45/64 [145.00]	45/64 [18.00]	4
TUF-800-XX	8-55/64 [225]	7-7/8 [200.00]	11-1/32 [280]	6-19/64 [160.00]	45/64 [18.00]	8
TUF-1000-XX	9-27/32 [250]	8-21/32 [220.00]	12-13/64 [310]	7-3/32 [180.00]	45/64 [18.00]	8
TUF-1250-XX	9-27/32 [250]	9-27/32 [250.00]	12-63/64 [330]	8-17/64 [210.00]	45/64 [18.00]	8

VIDEO ONLINE

The **Series TUF Ultrasonic Energy Meters** are highly accurate and stable energy meter that utilizes ultrasonic technology to measure heating and cooling energy consumption. The Series TUF is a compact meter with a flowmeter and energy calculator in one, making it great for installation on chillers and boilers.

BENEFITS/FEATURES
- Lower maintenance costs with local parameter display and no moving parts
- Seamless data transfer with serial communication output standard
- Eliminate the need for multiple units with a flow and temperature monitor in one

APPLICATIONS
- Heat metering
- Utilities billing
- Tenant billing
- Monitoring of water heating or cooling: radiators, fan coils

INSTRUCTIONS FOR ORDERING
- Choose 1 ultrasonic energy meter model (includes 2 BSPP pipe fittings, 2 tightening nuts, 2 O-rings, and 1 thermowell with welding collar)
- Choose 1 pipe fitting model given the appropriate fitting size if NPT or BSPT connections are required (for DN15 to DN40 only)*

Example: TUF-150-MD, Fitting Size: A, select pipe fitting Model WM-ACC-C01 or WM-ACC-C11.

Note: Series TUF units are factory set for supply line installation. (Can be modified in the field via communication protocol.)

SPECIFICATIONS

Service: Clean, compatible liquids.
Wetted Materials: Brass and 316L SS.
Range: See chart.
Display: 8-digit LED.
Accuracy: BTU: EN1434/CJ128 Class 2; Flow: ±(2+(0.02 Qp / Q))%; Temperature: ±0.1°C.
Power Requirements: 24 VDC/VAC (model dependent)•• or 3.6 V ER26500 lithium metal battery, user supplied and installed, battery acts as back-up if power is lost.
Power Consumption: 1 W.
Temperature Limits: Ambient: 41 to 131°F (5 to 55°C); Process: 36 to 203°F (2 to 95°C).
Humidity Limit: < 93%.
Pressure Limits: 232 psi (16 bar) for DN15 to DN40; 362 psi (25 bar) for >DN50.
Pressure Drop: < 1.5 psi (10 kPa).
Process Connection: See chart.
Serial Communications: Modbus® RTU or BACnet MSTP (selectable)•.
Enclosure Rating: IP65.
Enclosure Material: Plastic.
Repeatability: Flowmeter: 1%.
Electrical Connections: 3´ (0.91 m) 4x0.2 mm² cable with terminal block.
Flow Direction: Unidirectional.
Mounting Orientation: Horizontal or vertical.
Weight: See chart.
Compliance: CE.

•M-BUS available upon request.
••Power supply must be floating, not grounded. Model numbers ending in "-DC" are for DC only applications.

MODEL CHART

Ultrasonic Energy Meter Model	Body Size**	Pipe Size in	Pipe Size mm	Fitting Size	Communication	Meter Connection	GPM (LPM) Min Flow (Qi)	GPM (LPM) Nominal Flow Range (Qp)	GPM (LPM) Max Flow (Qs)	Weight lb (kg)
TUF-150-MD	DN15	1/2	15	A	Modbus®	G-3/4	0.1 (0.5)	6.6 (25)	13 (50)	3.1 (1.4)
TUF-200-MD	DN20	3/4	20	B	Modbus®	G1	0.2 (0.8)	11 (42)	22 (83)	3.1 (1.4)
TUF-250-MD	DN25	1	25	C	Modbus®	G1-1/4	0.3 (1.2)	15 (58)	31 (117)	4.1 (1.8)
TUF-320-MD	DN32	1-1/4	32	D	Modbus®	G1-1/2	0.5 (2)	26 (100)	53 (200)	5.2 (2.3)
TUF-400-MD	DN40	1-1/2	40	E	Modbus®	G2	0.9 (3)	44 (167)	88 (333)	6.6 (3)
TUF-500-MD*	DN50	2	50	-	Modbus®	Flange	1.3 (5)	66 (250)	132 (500)	33 (15)
TUF-650-MD	DN65	2-1/2	65	-	Modbus®	Flange	2.2 (8.3)	110 (417)	220 (833)	10.1 (4.6)
TUF-800-MD	DN80	3	80	-	Modbus®	Flange	3.5 (13.3)	176 (667)	352 (1333)	13.5 (6.1)
TUF-1000-MD	DN100	4	100	-	Modbus®	Flange	5.3 (20)	264 (1000)	528 (2000)	16.5 (7.5)
TUF-1250-MD	DN125	5	125	-	Modbus®	Flange	8.8 (33)	440 (1667)	881 (3333)	21.1 (9.6)
TUF-150-BN	DN15	1/2	15	A	BACnet	G-3/4	0.1 (0.5)	6.6 (25)	13 (50)	3.1 (1.4)
TUF-200-BN	DN20	3/4	20	B	BACnet	G2	0.2 (0.8)	11 (42)	22 (83)	3.1 (1.4)
TUF-250-BN	DN25	1	25	C	BACnet	G1-1/4	0.3 (1.2)	15 (58)	31 (117)	4.1 (1.8)
TUF-320-BN	DN32	1-1/4	32	D	BACnet	G1-1/2	0.5 (2)	26 (100)	53 (200)	5.2 (2.3)
TUF-400-BN	DN40	1-1/2	40	E	BACnet	G2	0.9 (3)	44 (167)	88 (333)	6.6 (3)
TUF-500-BN*	DN50	2	50	-	BACnet	Flange	1.3 (5)	66 (250)	132 (500)	33 (15)
TUF-650-BN	DN65	2-1/2	65	-	BACnet	Flange	2.2 (8.3)	110 (417)	220 (833)	10.1 (4.6)
TUF-800-BN	DN80	3	80	-	BACnet	Flange	3.5 (13.3)	176 (667)	352 (1333)	13.5 (6.1)
TUF-1000-BN	DN100	4	100	-	BACnet	Flange	5.3 (20)	264 (1000)	528 (2000)	16.5 (7.5)
TUF-1250-BN	DN125	5	125	-	BACnet	Flange	8.8 (33)	440 (1667)	881 (3333)	21.1 (9.6)

Model	Power Requirements
TUF-XXX-XX	24 VAC/VDC
TUF-XXX-XX-DC	24 VDC

*A pipe fitting is required to use the DN15 to DN40 energy meters. The DN50 has a flange connection and does not require a pipe fitting.
**For additional sizes up to 8″ (203.2 mm) contact factory.

MODEL CHART

Fitting Size	Pipe Fitting Model***	Process Connection Size	Weight lb (kg)	Fitting Size	Pipe Fitting Model*	Process Connection Size	Weight lb (kg)
A	**WM-ACC-C01**	1/2″ NPT	0.6 (0.3)	C	**WM-ACC-C13**	1″ BSPT	1.8 (0.8)
A	**WM-ACC-C11**	1/2″ BSPT	0.6 (0.3)	D	**WM-ACC-C14**	1-1/4″ BSPT	2.3 (1.1)
B	**WM-ACC-C02**	3/4″ NPT	1.2 (0.5)	E	**WM-ACC-C05**	1-1/2″ NPT	4.4 (2)
B	**WM-ACC-C12**	3/4″ BSPT	1.2 (0.5)	E	**WM-ACC-C15**	1-1/2″ BSPT	4.4 (2)
C	**WM-ACC-C03**	1″ NPT	1.8 (0.8)				

***Each model includes 1 fitting.

USA: California Proposition 65
WARNING: This product can expose you to chemicals including Lead, which is known to the State of California to cause cancer and birth defects or other reproductive harm. For more information go to www.P65Warnings.ca.gov.

Modbus® is a registered trademark of Schneider Electric USA, Inc.

DIGITAL FLOW METER

Multi-Parameter, Multi-Gas, Field Configurable

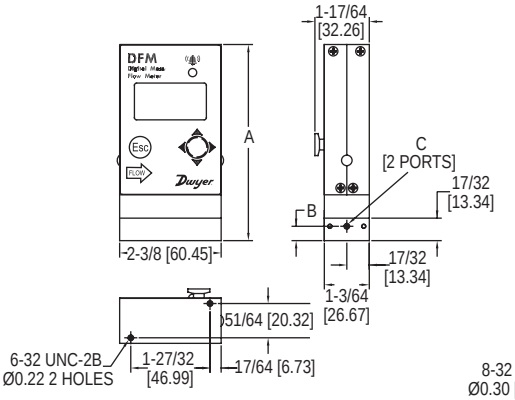

Ranges 0.5 mL/min-20 L/min (DFM-01/50)

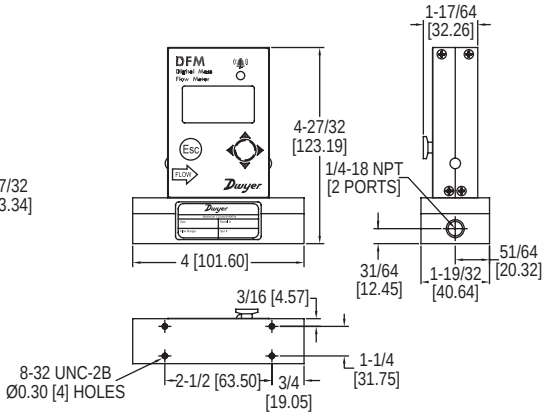

Ranges 21 L/min-100 L/min (DFM-51/56)

Range	A in [mm]	B in [mm]	C
0.5 mL/min-50 mL/min	4-13/32 [111.76]	4-37/64 [116.33]	10-32 UNF-2B
51 mL/min-20 L/min	4-37/64 [116.33]	4-13/32 [111.76]	1/8-27 NPT

The **Series DFM Digital Flow Meter** is the industry leader in the measurement of mass and volumetric flow rates of process gases. Using the OLED/joystick interface, the flowmeter can measure up to 30 different gases. TSimultaneous displays of mass flow, volumetric flow, pressure and temperature parameters promote applications in a variety of industries.

BENEFITS/FEATURES

- Quick (< 20ms) response time
- Multi-parameter functionality
- Multi-gas functionality
- Capable of storing up to 90 gases and 20 custom gas mixes
- Field configurable
- Modifiable outputs
- High, low or in-range alarms with preset action delay for mass flow, temperature and pressure

APPLICATIONS

- Gas flow measurement
- Operating pumps and valves
- Process equipment
- Scientific and analytical
- Bioreactors and surface depositions
- Gas sampling
- General manufacturing

SPECIFICATIONS

Service: Clean, non-corrosive gases compatible with wetted parts.
Wetted Materials: 316 SS, 416 SS, high temperature polyamide, alumina ceramic, epoxy, silicone, glass, gold. FKM O-rings.
Accuracy: ±(0.5% of reading + 0.2% FS).
Repeatability: ±0.15% FS.
Response Time: 10 ms.
Output: 0-5 VDC, 0-10 VDC and 4-20 mA.
Relay Rating: Programmable solid state relay.
Max. Particulate Size: 20 microns.
Temperature Limits: 14 to 140°F (-10 to 60°C).
Power Supply: 9-26 VDC.
Process Connections: 1/8″ compression fitting for flow rates ≤ 10 L/min; 1/4″ for ≤ 50 L/min; 3/8″ for ≤ 100 L/min.
Display: 2 x 16 character OLED (model selectable).
Pressure Limits: 120 psig (8.27 bar).
Leak Integrity: 1 x 10^{-9} sccs of helium.
Weight: DFM-01/50: 0.85 lb (0.4 kg); DFM-51/56: 1.15 lb (0.52 kg).
Agency Approvals: CE.

MODEL CHART

Example	DFM	-22	010	-V	-A	L	A	2	DFM-22010-V-ALA2
Series	DFM								Digital flow controller
Range*		22 26 32 37 39 43 48 56							0-100 mL/min 0-200 mL/min 0-500 mL/min 0-1000 mL/min 0-2 L/min 0-5 L/min 0-10 L/min 0-100 L/min
Body Size			005 010 050 100						Very low flow Low flow Medium flow High flow
Seal Materal				V					Fluoroelastomer
Fittings					A B D				1/4″ compression (low) 1/8″ compression (medium) 3/8″ compression (high)
Display						L			LED display
Output Signal							A		0-5 VDC default (4-20 mA, 0-10 VDC display selectable)
Digital Interface								2 3	RS-232 default (RS-485 display selectable) RS-232 with Modbus® (RS-485 selectable)

*Consult factory for ranges up from 0-0.5 mL/min to 0-100 L/min.

ACCESSORIES

Model	Description
GFM-110P	110 V power supply
GFM-220PE	220 V power supply

Note: 1.5 ft RS-232 interface 3-wire 9-pin D connector included. For RS-485 contact factory for A-DFM-CBL-A485DP 3 ft RS-485 3.5 mm stereo-audio connection with stripped ends available for purchase.

Modbus® is a registered trademark of Schneider Automation, Inc.

Dwyer
SERIES GFM

GAS MASS FLOW METERS

Flow Range Up to 1000 L/min, Pressures Up to 1000 psi, NIST Traceable

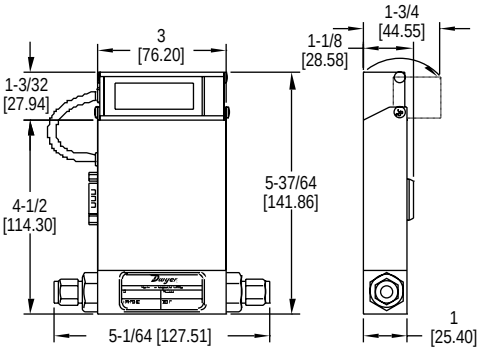

Model GFM-1101 thru GFM-1111 and GFM-2101 thru GFM-2111

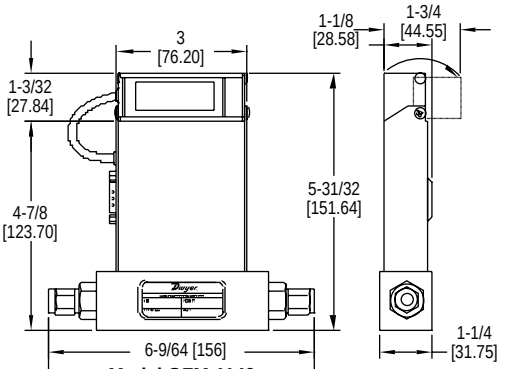

Model GFM-1140 thru GFM-1142 and GFM-2140 thru GFM-2142

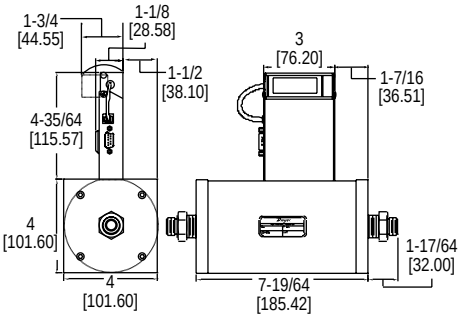

Model GFM-1130 thru GFM-1133 and GFM-2130 thru GFM-2133

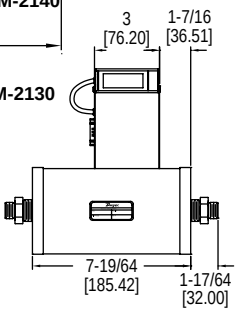

Model GFM-1143 thru GFM-1145 and GFM-2143 thru GFM-2145

Series GFM Gas Mass Flow Meters combine a straight tube sensor with a restrictor flow element to provide high accuracy and repeatability. Flow rates are virtually unaffected by temperature and pressure variations. Actual gas flow is displayed in engineering units on a 3-digit, 90° tiltable LCD readout. Units can be used with Series GFT Flow Totalizer for applications requiring totalization. Series GFM includes a NIST traceable certificate.

SPECIFICATIONS

Service: Clean gases compatible with wetted parts.
Wetted Materials: GFM-1XXX: Anodized aluminum, brass, 316 SS and fluoroelastomer O-rings; GFM-2XXX: 316 SS and fluoroelastomer O-rings.
Accuracy: ±1% FS including linearity over 59 to 77°F (5 to 25°C) and 5 to 60 psia (0.34 to 4 bar); Series X143, X144, X145, ±1.5% FS.
Repeatability: ±0.25% of FS.
Response Time: 2 s to within ±2% of actual flow.
Output: Linear 0-5 VDC and 4-20 mA.
Max. Particulate Size: 5 microns.
Temperature Limits: 32 to 122°F (0 to 50°C).
Power Supply: ±12 VDC.
Process Connections: 1/4″ compression fitting for flow rates ≤50 L/m; 3/8″ for 100 and 200 L/m; 1/2″ for 500 L/min; 3/4″ for 1000 L/min.
Pressure Limits: 1000 psig (68.9 bar); Series GFM-X143, X144, X145, 500 psig (34.5 bar).
Leak Integrity: 1 x 10-9 sccs of He.
Display: 90° tiltable, 3-1/2 digit.
Compliance: CE.

MODEL CHART

Model*	Material	Flow Range	Process Connector Compression Fitting	Model*	Material	Flow Range	Process Connector Compression Fitting
GFM-1101	Aluminum	0 to 10 mL/m	1/4″	**GFM-2101**	SS	0 to 10 mL/m	1/4″
GFM-1102	Aluminum	0 to 20 mL/m	1/4″	**GFM-2102**	SS	0 to 20 mL/m	1/4″
GFM-1103	Aluminum	0 to 50 mL/m	1/4″	**GFM-2103**	SS	0 to 50 mL/m	1/4″
GFM-1104	Aluminum	0 to 100 mL/m	1/4″	**GFM-2104**	SS	0 to 100 mL/m	1/4″
GFM-1105	Aluminum	0 to 200 mL/m	1/4″	**GFM-2105**	SS	0 to 200 mL/m	1/4″
GFM-1106	Aluminum	0 to 500 mL/m	1/4″	**GFM-2106**	SS	0 to 500 mL/m	1/4″
GFM-1107	Aluminum	0 to 1000 mL/m	1/4″	**GFM-2107**	SS	0 to 1000 mL/m	1/4″
GFM-1108	Aluminum	0 to 2 L/min	1/4″	**GFM-2108**	SS	0 to 2 L/min	1/4″
GFM-1109	Aluminum	0 to 5 L/min	1/4″	**GFM-2109**	SS	0 to 5 L/min	1/4″
GFM-1111	Aluminum	0 to 15 L/min	1/4″	**GFM-2111**	SS	0 to 15 L/min	1/4″
GFM-1131	Aluminum	0 to 30 L/min	1/4″	**GFM-2131**	SS	0 to 30 L/min	1/4″
GFM-1133	Aluminum	0 to 50 L/min	1/4″	**GFM-2133**	SS	0 to 50 L/min	1/4″
GFM-1142	Aluminum	0 to 100 L/min	3/8″	**GFM-2142**	SS	0 to 100 L/min	3/8″
GFM-1143	Aluminum	0 to 200 L/min	3/8″	**GFM-2143**	SS	0 to 200 L/min	3/8″
GFM-1144	Aluminum	0 to 500 L/min	1/2″	**GFM-2144**	SS	0 to 500 L/min	1/2″
GFM-1145	Aluminum	0 to 1000 L/min	3/4″	**GFM-2145**	SS	0 to 1000 L/min	3/4″

*Specified flow ranges are for an equivalent flow of nitrogen at 70°F (21°C) @ 760 mm Hg.

ACCESSORIES

Model	Description
GFM-110P	110 V power supply
GFM-220PE	220 V power supply
GFM-CBL4	3´ cable for 4-20 mA output
GFM-CBL5	3´ cable for 0-5 VDC output

USA: California Proposition 65
WARNING: This product can expose you to chemicals including Lead, which is known to the State of California to cause cancer and birth defects or other reproductive harm. For more information go to www.P65Warnings.ca.gov.

Dwyer
SERIES DFC

DIGITAL FLOW CONTROLLER

Multi-Parameter, Multi-Gas, Field-Configurable

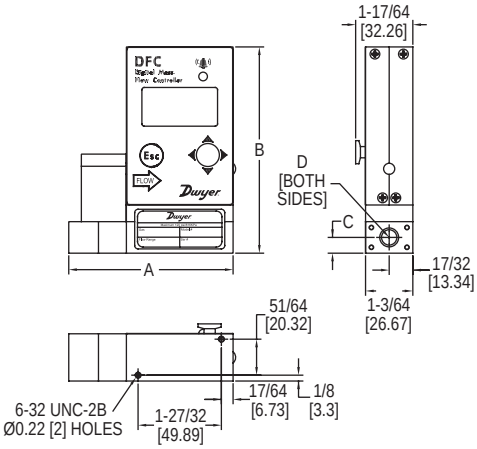

Ranges 0.5 mL/min-20L/min (DFC-01/50)

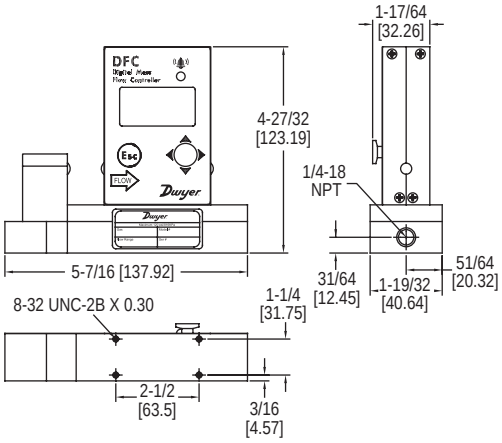

Ranges 21 L/min-100 L/min (DFC-51/56)

Range	A in [mm]	B in [mm]	C in [mm]	D
0.5 mL/min-50 mL/min	3-11/16 [93.47]	4-37/64 [116.33]	11/32 [8.64]	10-32 UNF
51 mL/min-20 L/min	3-21/32 [92.96]	4-13/32 [111.76]	11/32 [8.64]	1/8 NPT

The **Series DFC Digital Flow Controller** combines a straight tube sensor with a restrictor flow element to provide accurate readings and control. Simultaneous displays of mass flow, volumetric flow, pressure and temperature parameters promote applications in a variety of industries.

BENEFITS/FEATURES

- Able to quickly see changes due to fast <20 ms response rate
- Simple setup using configuration/calibration software
- Works for a variety of application with up to 90 different user selectable gases and gas mixes
- Meet application requirements with high accuracy and repeatability
- Minimize downtime with self-diagnostics through status LED or OLED indication

APPLICATIONS

- Gas flow measurement
- Gas flow control
- Operating pumps and valves
- Process equipment
- Vacuum process
- Scientific and analytical
- Bioreactors and surface depositions

SPECIFICATIONS

Service: Clean, non-corrosive gases compatible with wetted parts.
Wetted Materials: 316 SS, 416 SS, high temperature polyamide, alumina ceramic, epoxy, silicone, glass, gold. FKM O-rings.
Accuracy: ±(0.5% of reading + 0.2% FS).
Repeatability: ±0.2% FS.
Response Time: 150 ms.
Output: 0-5 VDC, 4-20 mA and 0-10 VDC.
Relay Rating: Programmable solid state relay.
Max. Particulate Size: 20 microns.
Temperature Limits: 14 to 140°F (-10 to 60°C).
Power Supply: 12-26 VDC.
Process Connections: 1/8″ compression fitting for flow rates ≤ 10 L/min (-005, -010); 1/4″ for ≤ 50 L/min (-050); 3/8″ for ≤ 100 L/min (-100).
Pressure Limits: 120 psig (8.27 bar).
Leak Integrity: 1 x 10^{-9} sccs of helium.
Display: 2 x 16 character OLED.
Weight: DFC-01/50: 1.40 lbs (0.635 kg); DFC-51/56: 1.66 lbs (0.755 kg).
Agency Approvals: CE.

MODEL CHART

Example	DFC	-22	010	-V	-A	L	A	2	DFC-22010-V-ALA2
Series	DFC								Digital flow controller
Range*		22 26 32 37 39 43 48 56							0 to 100 mL/min 0 to 200 mL/min 0 to 500 mL/min 0 to 1000 mL/min 0 to 2 L/min 0 to 5 L/min 0 to 10 L/min 0 to 100 L/min
Body Size			005 010 050 100						Very low flow Low flow Medium flow High flow
Seal Materal				V					Fluoroelastomer
Fittings					A B D				1/8″ compression (very low, low) 1/4″ compression (medium) 3/8″ compression (high)
Display						L			LED display
Output Signal							A		0-5 VDC default (4-20 mA, 0-10 VDC display selectable)
Digital Interface								2 3	RS-232 default (RS-485 display selectable) RS-232 default with Modbus® (RS-485 display selectable), body size 005, 010, 050 RS-232 default with Modbus® (RS-485 display selectable), body size 100

*Consult factory for ranges from 0-0.5 mL/min up to 0-100 L/min.

ACCESSORIES

Model	Description
GFM-110P **GFM-220PE**	110 V power supply 220 V power supply

Note: 1.5 ft RS-232 interface 3-wire 9-pin D connector included. For RS-485 contact factory for A-DFM-CBL-A485DP 3 ft RS-485 3.5 mm stereo-audio connection with stripped ends available for purchase.

Modbus® is a registered trademark of Schneider Automation, Inc.

Dwyer
SERIES GFC

GAS MASS FLOW CONTROLLERS

Flow Range Up to 1000 L/min, Pressures Up to 500 psi, NIST Traceable

CALIBRATION SERVICES AVAILABLE

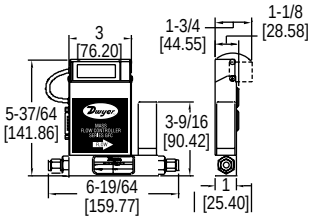

Model GFC-1101 thru GFC-1111 and GFC-2101 thru GFC-2111

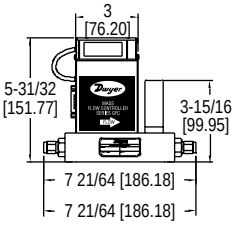

Model GFC-1130 thru GFC-1133 and GFC-2130 thru GFC-2133

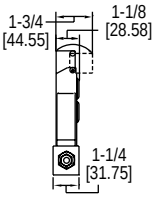

Model GFC-1140 thru GFC-1142 and GFC-2140 thru GFC-2142

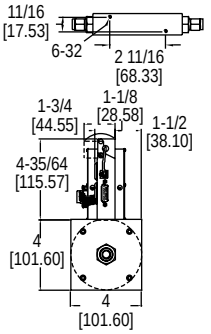

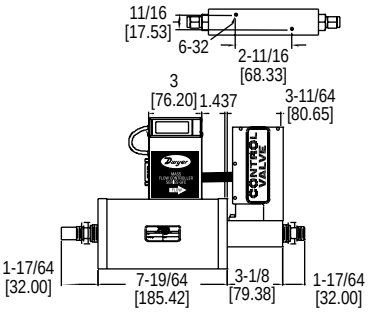

Model GFC-1143 thru GFC-1145 and GFC-2143 thru GFC-2145

The **Series GFC Gas Mass Flow Controllers** combine a straight tube sensor with a restrictor flow element. It is available for flow ranges up to 1000 L/min and offered in aluminum or 316 SS in 1/4˝, 3/8˝, 1/2˝ and 3/4˝ sizes.

BENEFITS/FEATURES
- Provides high accuracy and repeatability
- Flow rates are virtually unaffected by temperature and pressure variations
- Utilizes an electromagnetic valve and PID electronics to maintain continuous control by comparing measured sensor signal set to flow rates
- Set points can be adjusted with local potentiometers or remotely via 0-5 VDC or 4-20 mA analog signal
- Actual gas flow is displayed in engineering units on a 3-1/2 digit, 90° tiltable LCD readout
- Can be used with Series GFT2 Flow Totalizer for applications requiring totalization
- NIST traceable certificate included

APPLICATIONS
- Gas flow measurement
- Gas flow control
- Operating pumps and valves
- Process equipment
- Vacuum processes
- Glass and metal coating
- Film deposition

SPECIFICATIONS

Service: Clean gases compatible with wetted parts.
Wetted Materials: GFC-1XXX: Anodized aluminum, brass, 316 SS and fluoroelastomer O-rings; GFC-2XXX: 316 SS and fluoroelastomer O-rings.
Accuracy: ±1% FS including linearity over 59 to 77°F (5 to 25°C) and 5 to 60 psia (0.34 to 4 bar); Series GFC X143, X144, X145, ±1.5% FS.
Repeatability: ±0.25% FS.
Response Time: 2 s to within ±2% of actual flow.
Output: Linear 0-5 VDC and 4-20 mA.
Max. Particulate Size: 5 microns.
Temperature Limits: 32 to 122°F (0 to 50°C).
Power Supply: ±12 VDC.
Process Connections: 1/4˝ compression fitting for flow rates ≤50 L/m; 3/8˝ for 100 and 200 L/m; 1/2˝ for 500 L/min; 3/4˝ for 1000 L/min.
Pressure Limits: 1000 psig (68.9 bar); Series GFC-X143, X144, X145, 500 psig (34.5 bar).
Leak Integrity: 1 x 10^{-9} sccs of He.
Display: 90° tiltable, 3-1/2 digit.
Compliance: CE.

MODEL CHART

Aluminum Model	SS Model	Flow Range	Process Connector Compression Fitting
GFC-1101*	**GFC-2101***	0 to 10 mL/m	1/4˝
GFC-1102*	**GFC-2102***	0 to 20 mL/m	1/4˝
GFC-1103*	**GFC-2103***	0 to 50 mL/m	1/4˝
GFC-1104*	**GFC-2104***	0 to 100 mL/m	1/4˝
GFC-1105*	**GFC-2105***	0 to 200 mL/m	1/4˝
GFC-1106*	**GFC-2106***	0 to 500 mL/m	1/4˝
GFC-1107*	**GFC-2107***	0 to 1000 mL/m	1/4˝
GFC-1108*	**GFC-2108***	0 to 2 L/min	1/4˝
GFC-1109*	**GFC-2109***	0 to 5 L/min	1/4˝
GFC-1111*	**GFC-2111***	0 to 15 L/min	1/4˝
GFC-1131*	**GFC-2131***	0 to 30 L/min	1/4˝
GFC-1133*	**GFC-2133***	0 to 50 L/min	1/4˝
GFC-1142*	**GFC-2142***	0 to 100 L/min	3/8˝
GFC-1143*	**GFC-2143***	0 to 200 L/min	3/8˝
GFC-1144*	**GFC-2144***	0 to 500 L/min	1/2˝
GFC-1145*	**GFC-2145***	0 to 1000 L/min	3/4˝

*Specified flow ranges are for an equivalent flow of nitrogen at 70°F (21°C) @ 760 mm Hg

ACCESSORIES

Model	Description
GFC-110P	110 V power supply
GFC-220PE	220 V power supply
GFC-CBL1	8´ cable with 15-pin connector
GFC-CBL3	3´ extension cable for LCD readout

USA: California Proposition 65
⚠**WARNING:** This product can expose you to chemicals including Lead, which is known to the State of California to cause cancer and birth defects or other reproductive harm. For more information go to www.P65Warnings.ca.gov.

SELECTION GUIDE
pages 300-303

TYPICAL APPLICATIONS
pages 304-305

Level Indicators
pages 306-307

Water Leak Detectors
page 308

Level Switches, Float
pages 309-319

Level Switches, Optical
page 320

Level Switches, Displacer
page 320

Level Switches, Capacitive
pages 321-322

Level Switches, Vibrating Rod
page 322

Level Switches, Tuning Fork
page 323

Level Switches, Paddle
pages 324-325

Level Switches, Diaphragm
pages 326-327

Level Transmitters, Submersible
pages 328-331

Level Transmitters, Capacitive
page 332

Level Transmitters, Float
page 333

Level Transmitters, Ultrasonic
pages 334-335

Level/Pump Controllers
pages 336-338

Control Enclosures
page 339

Bin Vibrators
page 340

FEATURED PRODUCTS

CAPACITIVE LEVEL SWITCH

SERIES CLS2 | page 321

- No moving parts to jam, wear, or break
- Auto calibrates for easy set up

SUBMERSIBLE LEVEL TRANSMITTER

SERIES PBLTX | page 330

- Durable cage style design ensures long life in harsh application environments
- Large flush 316 SS diaphragm will not clog
- cULus intrinsically safe

Dwyer

LIQUID
Level Switches

SERIES	L4 - page 309	L6 - page 310	L8 - page 311	L10 - page 312
Service	Liquids	Liquids	Liquids	Liquids
Wetted Materials	316 SS	304 SS	316 SS	304 SS
Temperature Limits	275°F (135°C)	220°F (105°C)	212°F (100°C)	200°F (93°C)
Pressure Limits	2000 psig with option bar	2000 psi (138 bar)	150 psig (10.34 bar)	2000 psi (138 bar)
Process Connection	1-1/2″ or 2-1/2″ male NPT	1″ male NPT or 1″ female NPT with external float	1″ male NPT	1″ male NPT
Min. Specific Gravity	0.7	0.9	0.6	0.9
Output	SPDT or DPDT	SPDT or DPDT	SPDT	SPST
Mounting Orientation	Horizontal with optional vertical	Horizontal	Horizontal	Horizontal
Compliance	ATEX, CE, CSA, FM, IECEx,UL	ATEX, CE, CSA, FM, IECEx, KTL, UL	CE, cURus	CSA, UR

LIQUID
Level Switches

SERIES	123 - page 318	102 - page 318	CFS2 - page 319	FSW2 - page 319
Service	Liquids	Liquids	Liquids	Liquids
Wetted Materials	304 SS	Cast iron	Polypropylene	Polypropylene
Temperature Limits	365°F (185°C)	425°F (218°C)	122°F (50°C)	122°F (50°C)
Pressure Limits	150 psig (10.34 bar)	400 psig (27.6 bar)	14.5 psi (1 bar)	29 psi (2 bar)
Process Connection	1″ female NPT	1″ female NPT	N/A	N/A
Min. Specific Gravity	0.88	0.6	0.6	0.6
Output	SPDT, DPDT or (2) SPDT	SPDT, DPDT or (2) SPDT	SPST or SPDT	SPST or SPDT
Mounting Orientation	Vertical	Vertical	Horizontal	Vertical
Compliance	CSA, UL	UL	CE, UL/CSA	CE

These Selection Guides are for quick comparison of similar products. Please refer to the catalog page number referenced for complete product information and specifications.

LIQUID
Level Switches

SERIES	F6 & F7 - page 313	F6 & F7 - page 314	F7-MM - page 316	F7-MS - page 317
Service	Liquids	Liquids	Liquids	Liquids
Wetted Materials	Polypropylene, 316 SS, or Buna-N*	Polypropylene, 316 SS, or Buna-N*	Brass or 316 SS	Brass or 316 SS
Temperature Limits	176°F (80°C) or higher*	176°F (80°C) or higher*	180°F (82.2°C) or higher*	Buna-N floats: 180°F (82.2°C) in oil, 230°F (110°C) in water; SS floats: 300°F (148.9°C)
Pressure Limits	50 psig (3 bar) or higher*	15 psig (1 bar) or higher*	1000 psi (68.95 bar)	750 psi (51.7 bar)
Process Connection	M16x2, 18″ male NPT, 1/2″ male NPT, 3/4″ female NPT, or 3/8″-24″ UNF-2A*	1/8″ or 1/4″ male NPT*	1/8″, 3/4″, or 1″ male NPT, 3-5/8″ flange, 1-5/16-12UNF-2A, 3/8″-24 thread, or 2″ male NPT with 1/2″ conduit	1/2″, 1-1/4″, 2″, or 3″ 150# flange
Min. Specific Gravity	0.45 or higher*	0.45 or higher*	0.45	0.55
Output	SPST	SPST	SPST	SPST or SPDT
Mounting Orientation	Horizontal	Vertical	Vertical	Vertical ±30°
Compliance	N/A	CE, UL*	N/A	N/A

*Varies per product

LIQUID
Level Switches

SERIES	OLS - page 320	B-190 - page 320	CLS2 - page 321	CLS1 - page 322
Service	Liquids	Liquids	Liquids, powder, bulk materials	Solids, liquids, slurries
Wetted Materials	316 SS, Polysulfone or PFA	316 SS	316 SS	CPVC
Temperature Limits	200°F (93.3°C)	200°F (93.3°C)	185°F (85°C)	240°F (116°C)
Pressure Limits	1000 psig (69 bar)	125 psig (8.6 bar)	365 psi (25 bar)	30 psig (2.06 bar)
Process Connection	1/2″ male NPT	4″ 125 # cast iron flange	3/4″, 1″, or 1-1/2″ male NPT or BSPT or 1-1/2″ or 2″ sanitary clamp	1″ male NPS
Min. Specific Gravity	N/A	0.5	N/A	N/A
Output	NPN open collector	SPST or SPDT	DPDT	SPDT
Mounting Orientation	Any position	Vertical	Vertical or horizontal	Vertical or horizontal
Compliance	N/A	UL	CE, cULus	N/A

These Selection Guides are for quick comparison of similar products. Please refer to the catalog page number referenced for complete product information and specifications.

Dwyer

BULK
Level Switches

SERIES	CLS2 - page 321	CLS1 - page 322	VRLS - page 322	TFLS - page 323	CTF - page 323
Service	Liquids, powder and bulk	Liquids, slurries, powder and bulk	Powder and bulk	Powder and bulk	Powder and bulk
Sensing Technology	Capacitance	Capacitance	Vibrating rod	Vibrating tuning fork	Vibrating tuning fork
Wetted Materials	316 SS	CPVC	304 SS	316 SS	304 SS
Temperature Limits	185°F (85°C)	240°F (116°C)	176°F (80°C)	176°F (80°C)	212°F (100°C)
Pressure Limits	365 psi (25 bar)	30 psig (2.06 bar)	150 psi (10 bar)	145 psig (10 bar)	600 psi (40 bar)
Process Connection	3/4″, 1″, or 1-1/2″ male NPT or BSPT or 1-1/2″ or 2″ sanitary clamp	1″ male NPS	1″ male NPT	1-1/2″ male NPT	1″ male NPT
Output	DPDT	SPDT	SPDT	SPDT	PNP/NPN
Mounting Orientation	Vertical or horizontal	Vertical or horizontal	Vertical or horizontal	Vertical or horizontal	Vertical or horizontal
Agency Approvals	CE, cULus	N/A	N/A	N/A	N/A

SUBMERSIBLE
Level Transmitters

SERIES	SBLT2/SBLTX - page 328	MBLT - page 329	PBLT2/PBLTX - page 330	FBLT - page 331
Service	Liquids	Liquids	Liquids	Liquids
Wetted Materials	316 SS	316 SS	316 SS	316 SS
Temperature Limits	150°F (66°C)	176°F (80°C)	PBLT2: 180°F (82°C) PBLTX: 176°F (80°C)	176°F (80°C)
Pressure Limits	2x FS	2x FS	2x FS	2x FS
Accuracy	±0.25% FS	±0.25% FS	±0.25% FS	±0.25% FS
Range	0 to 300 psi (10 to 693 ft w.c) (3.2 to 211 m w.c)	0 to 300 psi (10 to 693 ft w.c) (3.2 to 211 m w.c)	0 to 300 psi (10 to 693 ft w.c) (3.2 to 211 m w.c)	0 to 300 psi (10 to 693 ft w.c) (3.2 to 211 m w.c)
Output	4-20 mA	4-20 mA or 0 to 5 V	4-20 mA	4- 20 mA
Agency Approvals	SBLT2: CE; SBLTX: CE, cULus	CE	PBLT2: CE; PBLTX: CE, cULus	CE

These Selection Guides are for quick comparison of similar products. Please refer to the catalog page number referenced for complete product information and specifications.

BULK
Level Switches

SERIES	DBLM - page 324	PLS2 - page 324	PLS - page 325	ULTRA-MAG™ - pages 326-327
Service	Powder and bulk	Powder and bulk	Powder and bulk	Powder and bulk
Sensing Technology	Rotating paddle	Rotating paddle	Rotating paddle	Magnetic linkage and diaphram
Wetted Materials	Polycarbonate	304 SS	316 SS	Aluminum or 304 SS with urethane, Buna-N, PTFE, silicone rubber, polyester, fluoroelestomer, white Buna-N or EPDM diaphragm
Temperature Limits	140°F (60°C)	176°F (80°C)	300°F (148.9°C)	350°F (176°C)
Pressure Limits	N/A	11.6 psi (0.8 bar)	30 psig (2.07 bar)	60 psig (4.14 bat)
Process Connection	3/4″ male NPT, optional flange and 1-1/4″ to 3/4″ reducer	1-1/4″ male NPT	1-1/4″ male NPT, optional flange	8-3/8″ (212.73 mm) diameter bolt hole circle
Output	SPDT	SPDT	SPDT or DPDT	SPDT
Mounting Orientation	Vertical or horizontal	Vertical or horizontal	Vertical or horizontal	Vertical
Agency Approvals	CE	CE, FM	cUL	CSA, UL

CAPACITIVE, ULTRASONIC AND FLOAT
Level Transmitters

SERIES	CRF2 - page 332	CLT - page 333	ULT - page 334	ULSS/ULSM/ULSL - page 335
Service	Liquids, powders, bulk material	Liquids	Liquids	Fluids/liquids
Wetted Materials	316 SS	Brass	303 SS	PVDF, FKM
Temperature Limits	Ambient: 185°F (85°C); Process: 250°F (121°C)	180°F (82°C) in water, 230°F (110 °C) in oil, 230°F (110°C) SS floats	140°F (60°C)	140°F (60°C)
Pressure Limits	100 psi (6.9 bar)	150 psig (10 bar)	30 psi (2 bar)	30 psi (2 bar)
Accuracy	±0.25% FS	±1 mm	±0.2% FS	ULSS: ±0.125″ (3 mm); ULSM/ULSL: ±0.2% FS
Range	12 to 30 ft (3.7 to 9.1 m)	Options from .5 to 68″ (0.01 to 1.73 m)	0 to 24.6 ft (0 to 7.5 m) or 0 to 32.8 ft (0 to 10 m)	ULSS: 0 to 4.1 ft (0 to 1.25 m); ULSM: 0 to 9.8 ft (0 to 3 m); ULSL: 0 to 18 ft (0 to 5.5 m)
Output	4-20 mA	4-20 mA or 0-5 V	4- 20 mA	4-20 mA
Agency Approvals	N/A	N/A	CE, FM	CE

These Selection Guides are for quick comparison of similar products. Please refer to the catalog page number referenced for complete product information and specifications.

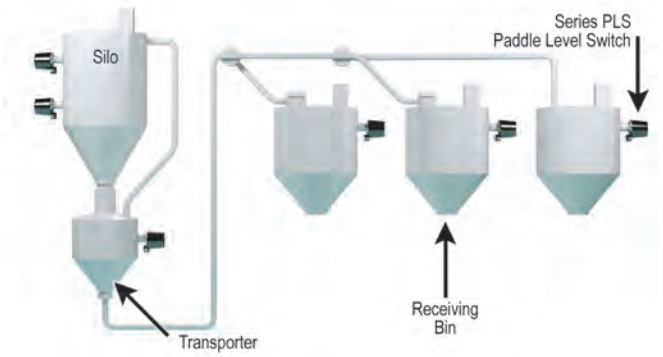

Proximity® Series PLS is used to indicate level status in pneumatic conveying systems

Pneumatic conveying systems use air to transport powder and dry bulk solids through conveying lines. The air is pressurized by positive pressure or vacuum to move the product through the lines into and out of silos, transporters, and receivers. Typical applications have high and low level indication in the storage bins to control the flow of product in or out. The Series PLS is perfect for level use in these storage bins. It has a rotating paddle that is inserted into the bin. As the product level builds up in the bin it stops the paddle from rotating and triggers the level output. The Series PLS is great for this application as it is not affected by pressure changes in the bin.

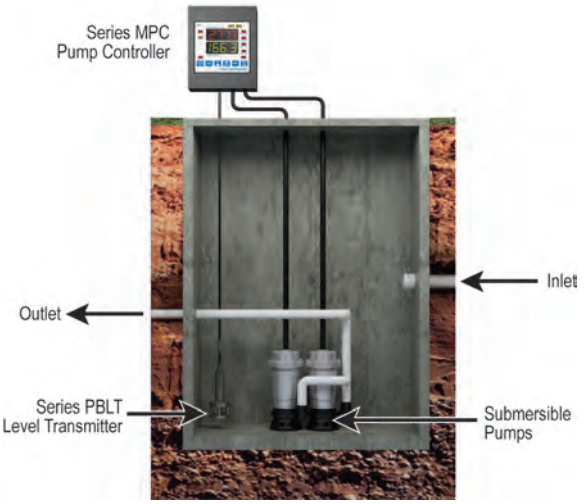

Mercoid® pump controller with level transmitter control pumps in wastewater lift stations

Lift stations are used to transmit wastewater to the treatment facility. Wastewater is transmitted by gravity feed so it has to be continually elevated to provide height to generate the flow. Lift stations are pits located at points in the wastewater system to collect the wastewater that usually have two submersible pumps. Wastewater in the lift station is pumped out to a higher level from where it can flow on to the next lift station or to the treatment facility. The Mercoid® Series MPC pump controller is used with the Series PBLT level transmitter to control the level in the lift station. The Series PBLT is a level transmitter that is submersed in the tank and sends a linear output of the height of wastewater above it. The Series MPC takes the height input and controls the pumps according to how it has been programmed.

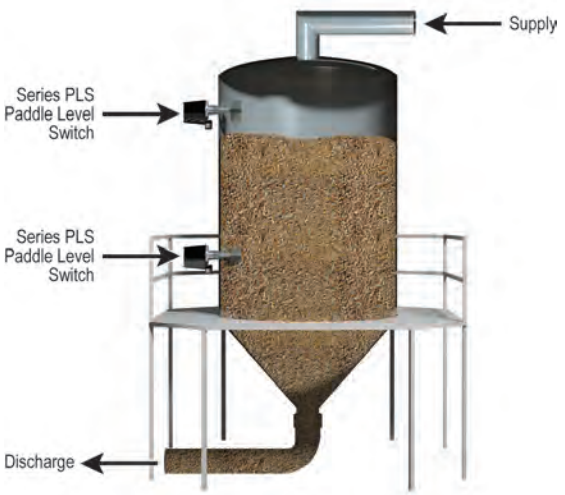

Grain hopper level controlled by Series PLS Paddle Level Switch

The supply of grain pneumatically conveyed to this dispensing hopper is controlled by two Proximity® Series PLS paddle level switches. When the grain level falls to the low limit switch, the supply is turned on until the hopper fills to the level of the high limit switch which turns off the supply. Since grain dust is explosive, the explosion-proof Series PLS provides the required safety protection. The Series PLS is a paddle level switch and is not affected by the varying pressure in the hopper due to the cycling of the pneumatic conveying system.

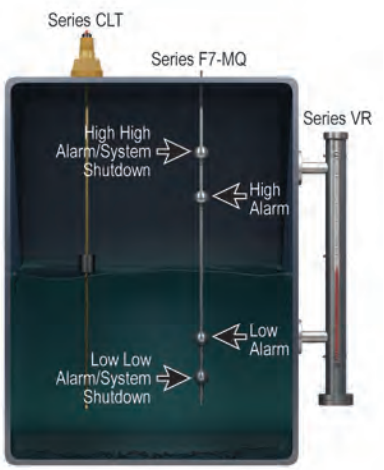

Custom level sensing devices are built to meet each customer's specific requirements, providing visual indication, continuous measurement, and point level control

To meet various tank level measuring needs, Dwyer Instruments, Inc. offers custom-configured products built to customer specifications that provide visual indication, continuous level measurement, and multiple point level measurement. Series VR or MVR View-Rite Level Indicators are a safe way to keep the process isolated while providing true visible indication. Unlike sight glasses, which can crack or break, View-Rite Indicators contain liquids entirely within their stainless steel enclosure. For continuous level measurement needs, the Series CLT uses reed switch technology to offer a more economical solution than expensive ultrasonic, submersible or RT transmitters. Lastly, the Series F7-MQ can be used in virtually any tank to indicate high and low alarms or to control pumps and valves.

Mercoid® displacer type level control is ideal for controlling industrial sump pumps

Industrial sumps and other underground tanks are ideal applications for top-mounted Mercoid® displacer type level controls. Easily installed, these controls use porcelain displacers that do not float on the surface of liquids, but are suspended on a coil spring and cable. As the liquid in the tank reaches the level of the upper displacers, their weight decreases by an amount equal to the liquid displaced, allowing the spring to move the cable upward, actuating the switch and the pump is turned on. As the liquid level falls below the upper displacers they move only a small amount, staying within the switch deadband until the liquid level falls to the center of the bottom displacer. At this point the switch is deactivated stopping the pump. The pump will remain deactivated until the water level rises to the upper displacers, repeating the cycle. The displacers are not affected by turbulence, pressure or chemicals and are excellent for tanks with viscous or dirty liquids. The level differential is easily adjusted by repositioning of the displacers on the 316 SS cable.

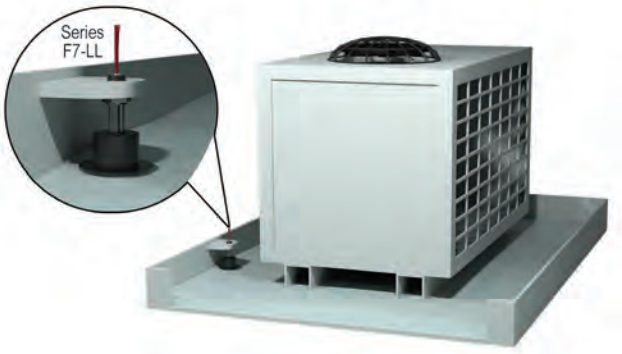

Low level float switch enables sensing in air conditioner drip pans and other shallow level applications

Standard float switches require at least an inch of liquid to attain enough buoyancy to switch. This can be a problem in applications where low level sensing is required. The hat-shaped design of the W.E. Anderson™ Series F7-LL provides necessary buoyancy for switching in only 5/8″ of water. This is essential for air conditioner drip pans, low level sumps, and drains. The Series F7-LL is also ideal for low alarms, where running the process dry can result in catastrophic failure.

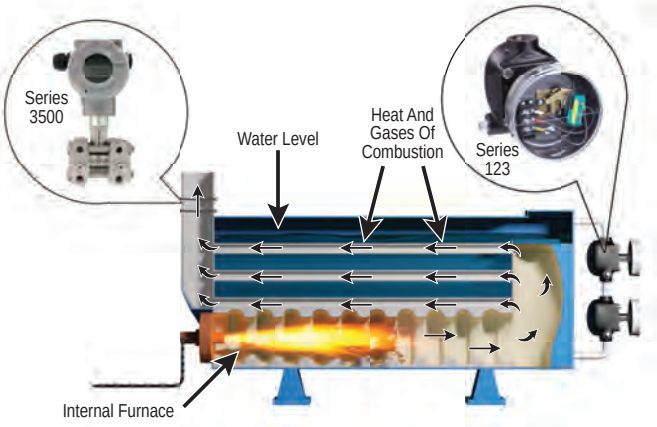

Mercoid® Series 123 level controls provide high and low alarm on large de-aerator tank

Liquid level in the external piping equals level in the tank. When level rises to high limit, float in upper Series 123 is lifted, actuating switch to sound high level alarm. When level drops to low limit, lower Series 123 sounds low level alarm. In addition, a Series 3500 transmitter monitors the flow at the feedwater outlet. This helps to measure the efficiency of the de-aerator system.

W.E. Anderson™ Series OLS indicates level in heavy equipment radiator

Many types of heavy industrial equipment use a liquid cooling system for the motor. A vibratory trench roller is a machine that compacts sub-bases for roads, parking lots, etc., and is an example of the type of equipment that would utilize this system. This machine incorporates a radiator cooling system. In the system, cooling liquid circulates through the engine preventing it from over heating. As the engine is cooled the cooling fluid heats up. The fluid returns to the radiator to cool down before being circulated through again. If there is not enough cooling fluid in the system the engine will not be cooled enough and damage will occur. A W.E. Anderson™ Series OLS optical level switch is installed as a low level alarm. The level alarm is signaled by the Series OLS before the cooling fluid gets to a critical low level, warning the operator of the problem. The Series OLS uses an optical detection system superior for this application as float controls may trip from machine vibration. Also the compact insertion length is ideal for a small radiator.

Dwyer

SERIES VR

VIEW-RITE LEVEL INDICATOR

Customized to Fit Any Application, Durable, 316 SS Housing and Float

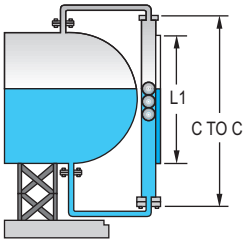

Top and bottom

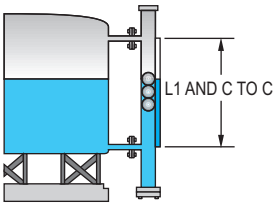

Side and side

TYPICAL MEASUREMENTS	
C to C = L1 + 10.25″ (260.35 mm)	C to C = L1

The **Series VR View-Rite Level Indicator** provides customized level indication to meet a variety of application requirements. Specify any indication length up to 96″ (244 cm) and the View-Rite level indicators incorporate a pressure tight housing with internal float that magnetically activates external level indication flags, switches, or transmitter.

SPECIFICATIONS
Service: Clean, low viscosity liquids. **Pressure Limits:** 275 psi (18.9 bar), 225 psi (15.5 bar) @ 100°F (37.8°C), 215 psi (14.8 bar) @ 300°F (148.9°C), 195 psi (13.4 bar) @ 400°F (204.4°C). **Tube Diameter:** 2-1/2″ (64 mm).

BENEFITS/FEATURES

- Low maintenance with all 316L SS wetted material
- Environmentally friendly with process liquid contained inside a pressure-tight housing
- Durable 316L SS provides maintenance-free operation
- Requires no external power to operate
- Brightly colored flags are easy to read even at long distances

APPLICATIONS

- Pharmaceuticals
- Oil and gas
- Medical equipment
- Food and beverages
- Semiconductor manufacturing
- Boilers

MODEL CHART

Example	VR	-S	SS	1	-TP	D	-0.8	-150	-090	-080	P	1	-I	VR-SSS1-TPD-0.8-150-090-080P1-I
Construction	VR													View-rite level indicator
Wetted Materials		S												316L SS, fluoroelastomer O-ring
Configuration			TB											Top/bottom connections
			SS											Side/side connections
Process Connection				1										1/2″ NPT (female on TB; male on SS configuration)
				2										1″ NPT (female on TB; male on SS configuration)
				4										1″ 150# RF flange
				5										2″ 150# RF flange
				6										1″ 300# RF flange
				7										2″ 300# RF flange
Float Access					TP									Top
					BM									Bottom
					TB									Top and bottom (only with SS configuration)
Drain and Vent						N								None
						D								Drain, 1/2″ female NPT (only with SS configuration)
						V								Vent, 1/2″ female NPT (only with SS configuration)
						B								Drain and vent (only with SS configuration)
Specific Gravity							0.0							Specific gravity of fluid: Minimum is 0.8
Operating Pressure								000						Operating pressure in psi: Maximum is 275 psi (18.9 bar)
Operating Temperature									000					Operating temperature of fluid in °F: Maximum is 400°F (204°C)
Indicating Length, L1										000				Indicator length in whole inches: Maximum of 240″ (6.1 m); Minimum of 6″ (15.25 cm)
Indicating Flags											P			Plastic, white and orange [300°F (149°C) maximum]
											A			Aluminum, silver and black
Visual Indicating Scale												N		None
												1		Feet and inches
												2		Inches only
Output Options													I	4-20 mA transmitter of level [300°F (149°) maximum]
													V	0-5 VDC transmitter of level

Note: Models are built to your specifications.

OPTIONAL SWITCH MODULES

Model	Description
VR-S1	Maximum temperature is 300°F (148.9°C). Polysulfone with 1/4″ female NPT conduit connection.
VR-S2	Maximum temperature is 750°F (399°C). 316 SS with 1/2″ male NPT conduit connection.
VR-S3	Maximum temperature is 750°F (399°C). Explosion-proof terminal box with 1/2″ female NPT conduit connection.

Note: Clamp onto the level indicator. SPST, rated .17 A @ 120 VAC, .08 A @ 240 VAC, .13 A @ 120 VDC, .06 A @ 240 VDC.

Dwyer

SERIES MVR

MINI VIEW-RITE LEVEL INDICATOR

Customized, Visual Level Indication, Compact Size

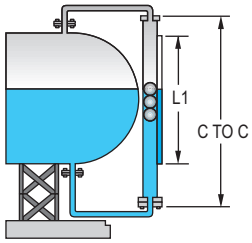

Top and bottom

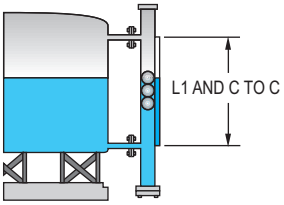

Side and side

TYPICAL MEASUREMENTS	
C to C = L1 + 7.72″ (196.09 mm)	C to C = L1

The **Series MVR Mini View-Rite Level Indicator** provides customized level indication to meet a variety of application requirements in a 1-1/4″ (32 mm) housing. Specify any indication length up to 96″ (244 cm) and the Mini View-Rite level indicators incorporate a pressure tight housing with internal float that magnetically activates external level indication flags, switches, or transmitter.

SPECIFICATIONS
Service: Clean, low viscosity liquids.
Pressure Limits: ≤ 300°F, 400 psi (27.6 bar); ≥ 300°F, 373 psi (25.7 bar).
Tube Diameter: 1-1/4″ (32 mm).

BENEFITS/FEATURES

- Low maintenance with all 316L SS wetted material
- Environmentally friendly with process liquid contained inside a pressure tight housing
- Durable 316L SS provides maintenance-free operation
- Requires no external power to operate
- Brightly colored flags are easy to read even at long distances

APPLICATIONS

- Pharmaceuticals
- Medical equipment
- Food and beverages
- Semiconductor manufacturing
- Boilers

MODEL CHART

Example	MVR	-S	SS	1	-TP	D	-0.8	-150	-090	-080	P	1	-I	MVR-SSS1-TPD-0.8-150-090-080P1-I
Construction	MVR													Mini view-rite level indicator
Wetted Materials		S												316L SS housing, 316L SS float, fluoroelastomer O-ring
Configuration			TB SS											Top/bottom connections Side/side connections
Process Connection				1 3										1/2″ NPT (female on TB; male on SS configuration) 1/2″ 150# RF flange
Float Access					TP BM TB									Top Bottom Top and bottom (only with SS configuration)
Drain and Vent						N D V B								None Drain, 1/2″ female NPT (only with SS configuration) Vent, 1/2″ female NPT (only with SS configuration) Drain and vent (only with SS configuration)
Specific Gravity							0.0							Specific gravity of fluid: Minimum is 0.8
Operating Pressure								000						Operating pressure in psi: Maximum is 400 psi (27.6 bar)
Operating Temperature									000					Operating temperature of fluid in °F: Maximum is 400°F (204°C)
Indicating Length, L1										000				Indicator length in whole inches: Maximum of 240″ (6.1 m); Minimum of 6″ (15.25 cm)
Indicating Flags											P A			Plastic, white and orange [300°F (149°C) maximum] Aluminum, silver and black
Visual Indicating Scale												N 1 2		None Feet and inches Inches only
Output Options													I V	4-20 mA transmitter of level [300°F (149°) maximum] 0-5 VDC transmitter of level

Note: Models are built to your specifications.

OPTIONAL SWITCH MODULES

Model	Description
MVR-S1	Maximum temperature is 300°F (148.9°C). Polysulfone with 1/4″ female NPT conduit connection.
MVR-S2	Maximum temperature is 750°F (399°C). 316 SS with 1/2″ male NPT conduit connection.
MVR-S3	Maximum temperature is 750°F (399°C). Explosion-proof terminal box with 1/2″ female NPT conduit connection.

Note: Clamp onto the level indicator. SPST, rated .17 A @ 120 VAC, .08 A @ 240 VAC, .13 A @ 120 VDC, .06 A @ 240 VDC.

Dwyer

SERIES WD3

WATER LEAK DETECTORS

Battery or External Powered, SPST or DPDT Relays

WD3-BP WD3-LP Bracket

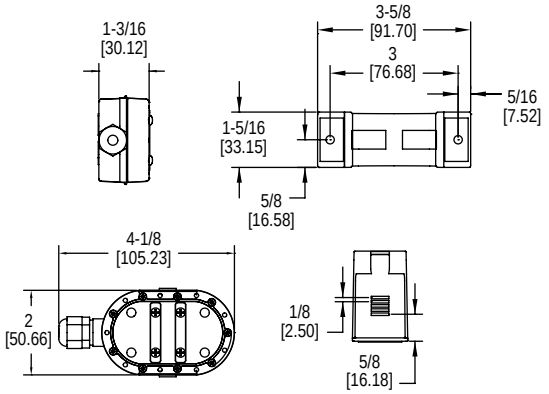

WD3 Bracket

The **Series WD3 Water Leak Detectors** protect equipment from water damage by detecting the presence of water. Model WD3-BP-D1-A is battery powered, all others require AC or DC supply voltages.

BENEFITS/FEATURES
- Audible and visual alerts provide local indication of the alarm condition and internal switch will give remote indication or control to prevent further buildup of water
- Sensing height can be adjusted as low as 1/32″ (0.79 mm) using the included adjustable mounting bracket
- Mounting bracket can attach to any flat surface by either using the attached adhesive strips or mounting screws for easy installation

APPLICATIONS
- AHU drip pans
- Radiant floors
- Data centers
- Sump pumps
- Drains

MODEL CHART

Model	Output	Power	Audible Alarm
WD3-BP-D1-A	SPST NO SSR	Battery	Yes
WD3-LP-D2	DPDT relay	24 VAC (±10%) or 11-27 VDC	No
WD3-LP-D2-A	DPDT relay	24 VAC (±10%) or 11-27 VDC	Yes

SPECIFICATIONS

Service: Water or conductive fluids.
Minimum Sensing Gap: 1/32″.
Switch Type: Battery powered model: SPST NO SSR; External powered models: DPDT relay.
Electrical Ratings: Battery powered model: Pilot duty rating 250 mA @ 24 VDC; External powered models: 1 A @ 24 VAC/DC.
Audible Alarm: At least 85 dB @ 1´ distance (depends on model).
Visual Alarm: Red LED for water level; Yellow LED for low battery (battery powered model only); Green LED for power condition (external powered models only).
Temperature Limits: 32 to 122°F (0 to 50°C).
Power Requirements: Battery powered model: 3V CR2450 lithium metal battery, installed functional, user replaceable; External powered models: 24 VAC (±10%) or 11-27 VDC.
Power Consumption: Battery powered model: 0.9 mA steady state / 3.0 mA during alarm condition; External powered models: 30 mA steady state / 85 mA during alarm condition.
Battery Life: 5 years steady state / 48 hours during alarm condition.
Electrical Connections: 4.9´ (1.5 m), 22 AWG, PVC, UL plenum rated cable.
Enclosure Material: ABS and polycarbonate with flammability classification UL 94 V-0.
Enclosure Rating: Audible alarm models: Watertight up to 3/4 of the body height; Non-audible alarm models: NEMA 6P (IP 68) submersible.
Weight: 4.85 oz (137.5 g).
Compliance: CE.

ACCESSORIES

Model	Description
A-WD3-BRK	Replacement mounting bracket

SERIES WD

WATER DETECTOR AND SENSOR TAPE

Detects Low Levels Of Conductive Liquids, Large Measuring Area

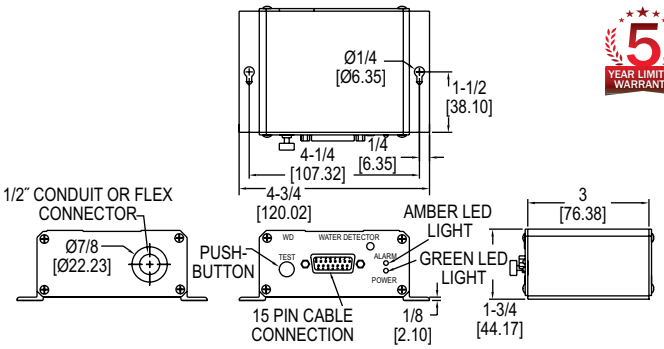

The **Series WD Water Detector and Sensor Tape** is designed for dependable detection of water presence even of low conductive liquids. The water sensing tape attaches to module and if any liquid comes in contact with the tape the resistance is changed and the alarm will be triggered. The sensing tape is 1″ wide and can be bought in lengths of 5, 10, 15 and 25´ and is powered by 24 VAC or 24-30 VDC.

BENEFITS/FEATURES
- Sturdy and reliable aluminum enclosure
- Hydrophobic tape does not absorb any liquid allowing for faster drying time and faster return to service after water leak
- Multiple tapes can be connected together to extend the coverage area

APPLICATIONS
- Drip pans under HVAC equipment
- Computer rooms
- Telecommunication facilities
- Leak detection around water pumps

SPECIFICATIONS

Service: Conductive liquid.
Switch Type: DPDT.
Electrical Rating: 1 A @ 24 VAC/VDC.
Power Requirements: 24 VAC, 24-30 VDC.
Power Consumption: 35 mA maximum.
Electrical Connections: Screw terminals.
Conduit Connections: Hole for 1/2″ conduit.
Enclosure: Extruded aluminum.
Sensor Tape: 1″ (25.4 mm) wide and 5´, 10´, 15´ or 25´ long.
Weight: 8 oz (.23 kg).

MODEL CHART

Model	Description
WD	Water module
TP05	5´ (1.52 m) tape
TP10	10´ (3.05 m) tape
TP15	15´ (4.57 m) tape
TP25	25´ (7.62 m) tape

Dwyer
SERIES L4

FLOTECT® FLOAT SWITCH

Magnetically Operated Switch, Leak Proof Body, Explosion-Proof

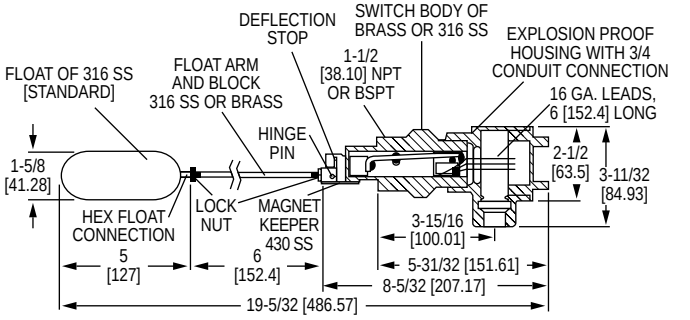

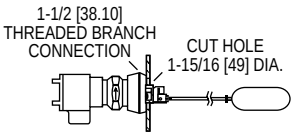

Standard installation

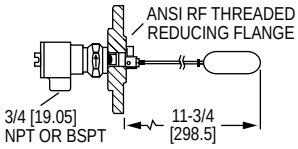

Horizontal, flange installation

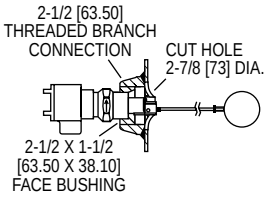

Horizontal, 2-1/2 threaded branch connection installation with optional 2-1/2 [64] spherical float

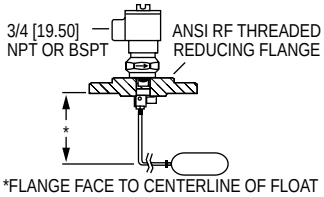

*FLANGE FACE TO CENTERLINE OF FLOAT SPECIFIED BY CUSTOMER. NORMALLY SHOULD NOT EXCEED 20″ [508 mm].

Vertical, flange installation

The **Series L4 Flotect® Float Switch** is a rugged and reliable float switch which operates automatically to indicate tank level.

BENEFITS/FEATURES

- Superior performance due to unique magnetically-actuated switching design
- Long product life with no bellows, springs, or seals to fail
- Avoids clogs using a free-swinging float that attracts a magnet within the solid metal switch body, actuating a snap switch by means of a simple lever arm
- Prevents vertical hang up with float arm hinge design that limits the arm angle

APPLICATIONS

- Direct pump control for maintaining level
- Automatic tank dump operations
- Level control
- Valve control
- Level alarm in sumps, scrubber systems, hydro-pneumatic tanks, boilers, and water/wastewater treatment processes

MODEL CHART

Model	Description	Process Connection
L4	Brass body, side wall mounting	NPT
L4-NH**	Brass body, side wall mounting, no housing	NPT
L4-SS	316 SS* body, sidewall mounting	NPT
L4-SS-NH**	316 SS* body, sidewall mounting, no housing	NPT
L4-BSPT	Brass body, side wall mounting	BSPT
L4-SS-BSPT	316 SS* body, sidewall mounting	BSPT

*316 SS body and float with 430 SS magnet keeper (wetted part).
**No housing option (-NH) has no approvals.

OPTIONS

To order add suffix:	Description
-50	Optional float (2-1/2″ spherical) 304 SS rated 50 psig (3.5 bar) and 0.5 min. s.g.
-150	Optional float (2-1/2″ spherical) 316 SS rated 150 psig (10.3 bar) and 0.7 min. s.g.
-300	Optional float (2-1/2″ spherical) 304 SS rated 300 psig (20.7 bar) and 0.7 min. s.g.
-316	*316 SS magnet keeper option to replace standard 430 SS
-AT	ATEX compliant construction
-BSPT	1-1/2″ female BSPT process connection
-D	DPDT contacts
-IEC	IECEx certified construction
-MT	High temperature rated 400°F (204°C) (see electrical rating in specifications, no listings or approvals)
-MV	Gold plated contacts for dry circuits (see electrical rating in specifications, no listings or approvals)
-NH	No housing
-TOP	Top mounted for vertical flange installation [distance from flange face to centerline of float to be specified, 20″ (508 mm) max]
-TRD	Time delay relay with 2 SPDT contacts, adjustable from 0-1 to 0-31 minutes (decreasing flow) (no listings or approvals)
-TRI	Time delay relay with 2 SPDT contacts, adjustable from 0-1 to 0-31 minutes (increasing flow)

*316 SS body and float with 430 SS magnet keeper (wetted part).

Note: Consult factory for price and availability of fittings for L4 installation. Threaded branch connection, bushings, and flanges are available in a variety of sizes and materials.

SPECIFICATIONS

Service: Liquids compatible with wetted materials.
Wetted Materials: Float and Rod: 316 SS; Body: Brass or 316 SS standard; Magnet Keeper: 430 SS standard, 316 SS or nickel optional.
Temperature Limits: 4 to 275°F (-20 to 135°C) standard, MT high temperature option 400°F (205°C) [MT option not UL, CSA, ATEX or IECEx]. ATEX and IECEx options: Ambient temperature -4 to 163°F (-20 to 73°C); Process temperature -4 to 163°F (-20 to 73°C).
Pressure Limit: Brass body 1000 psig (69 bar), 316 SS body 2000 psig (138 bar). Standard float rated 100 psig (6.9 bar). For other floats, see options.
Enclosure Rating: Weatherproof and Explosion-proof. **Listed with UL and CSA for Class I, Groups C and D; Class II, Groups E, F, and G.
ATEX CE 2813 Ex II 2 G Ex db IIB T6 Gb -20°C≤Tamb≤73°C. -20°C≤Process Temp≤73°C.
EU-Type Certificate No.: KEMA 03 ATEX 2383.
ATEX Standards: EN 60079-0:2012+A11:2013.
IECEx Certified: For Ex db IIB T6 Gb -20°C≤Tamb≤73°C. -20°C≤Process Temp≤73°C.
IECEx Certificate of Conformity: IECEx DEK 11.0071.
IECEx Standards: IEC 60079-0:2011; IEC 60079-1:2014.
Switch Type: SPDT snap switch standard, DPDT snap switch optional.
Electrical Rating: UL, FM, ATEX and IECEx models: 10 A @ 125/250 VAC (V~). CSA models: 5 A @ 125/250 VAC (V~); 5 A res., 3 A ind. @ 30 VDC (V⎓). MV option: 1 A @ 125 VAC (V~); 1 A res., .5 A ind. @ 30 VDC (V⎓). MT option: 5 A @ 125/250 VAC (V~). [MT and MV option not UL, CSA, FM, ATEX or IECEx].
Electrical Connections: UL and CSA models: 16 AWG, 6″ (152 mm) long. ATEX and IECEx unit: terminal block.
Conduit Connection: 3/4″ (19.05 mm) female NPT standard or M25 with -BSPT option.
Process Connection: 1-1/2″ (38.10 mm) male NPT or 1-1/2″ (38.10 mm) male BSPT standard, 2-1/2″ (63.50 mm) male NPT or 2-1/2″ (63.50 mm) male BSPT standard optional floats.
Mounting Orientation: Horizontal installation standard, optional vertical top mount.
Dead Band: 3/4″ (19 mm) for standard float.
Specific Gravity: 0.7 minimum with standard float. For other floats see model chart.
Weight: 4 lb 9 oz (2.07 kg).
Compliance: ATEX, CE, CSA, FM, IECEx, UL**.

**No housing option (-NH) has no approvals.

USA: California Proposition 65
WARNING: This product can expose you to chemicals including Lead, which is known to the State of California to cause cancer and birth defects or other reproductive harm. For more information go to www.P65Warnings.ca.gov.

Dwyer
SERIES L6

FLOTECT® LIQUID LEVEL SWITCHES

Easy In-wall or External Installation, Up to 2000 psig (138 bar), Compact Size

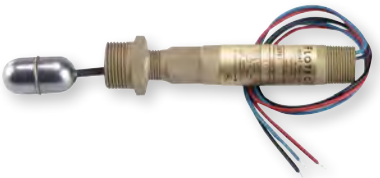

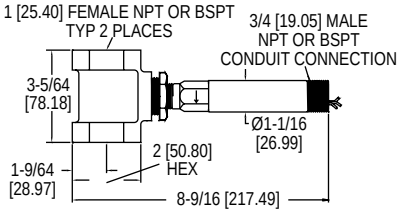

Model L6 with external float chamber

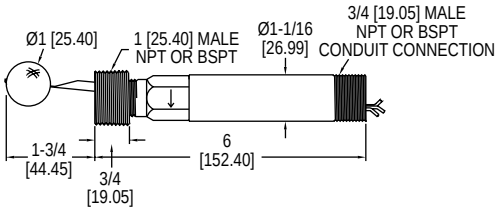

Model L6 with spherical float

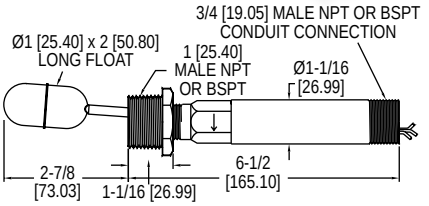

Model L6 with cylindrical float

The **Series L6 Flotect® Liquid Level Switches** are rugged and reliable float switches which operates automatically to indicate tank level. It is offered with a 303 SS or brass body with spherical or cylindrical float options.

BENEFITS/FEATURES

- Trouble-free service due to compact design
- Simple and dependable operation with no mechanical linkage
- Leak-proof lower body machined from bar stock
- Flexible application use with side wall or direct tee mounting options available to act as an external float chamber
- Ideal for demanding outdoor applications with weatherproof and explosion-proof body
- Save on maintenance costs with electrical assembly that can be easily replaced without removing the unit from the installation so that the process does not have to be shut down
- High accuracy with sensitivity to level changes of less than 1/2″ (12 mm)

APPLICATIONS

- Direct pump control for maintaining level
- Automatic tank dump operations
- Level control
- Valve control
- Level alarm in sumps, scrubber systems, hydro-pneumatic tanks, boilers, and water/wastewater treatment processes

OPTIONS

To order add suffix:	Description
-AT	ATEX compliant construction includes, weatherproof and explosion-proof, junction box
-CSA	CSA and UL approved construction, includes weatherproof and explosion-proof junction box
-IEC	IECEx certified construction, weatherproof and explosion-proof, junction box
-MT	High temperature rated 400°F (204°C) (see electrical rating in specifications, no listings or approvals, only available on models with stainless steel floats)
-MV	Gold plated contacts for dry circuits (see electrical rating in specifications)

Note: M25 is not available with the CSA housing.

DPDT Contacts

Note: To order, change seventh character in model number to “D”.
Example: L6EPB-B-D-3-O

Options Not Shown: 1-1/2″ and 2″ (38.10 and 50.80 mm) male NPT or 1-1/2″ and 2″ (38.10 and 50.80 mm) male BSPT process connection, 2″ female NPT or 2″ female BSPT.

SPECIFICATIONS

Service: Liquids compatible with wetted materials.
Wetted Materials: Float: Solid polypropylene or 304 SS; Lower body: Brass or 303 SS; Magnet: Ceramic; External float chamber (tee): Matches lower body choice of brass or 303 SS; Other: Lever arm, spring, pin, etc.: 301 SS.
Temperature Limit: -4 to 220°F (-20 to 105°C) Standard, MT high temperature option 400°F (205°C)(MT not UL, CSA, ATEX, IECEx and KC). ATEX compliant AT, IECEx IEC and KC option ambient temperature -4 to 167°F (-20 to 75°C) process temperature: -4 to 220°F (-20 to 105°C).
Pressure Limits: See model chart.
Enclosure Rating: Weatherproof and explosion-proof. Listed with UL and CSA for Class I, Groups A, B, C and D; Class II, Groups E, F, and G. (Group A on SS body models only).
ATEX CE 2813 Ex II 2 G Ex db IIC T6 Gb Process Temp≤75°C.
EU-Type Certificate No.: KEMA 04ATEX2128.
ATEX Standards: EN 60079-0:2012+A11:2013; EN 60079-1:2014.
IECEx Certified: For Ex d IIC T6 Gb Process Temp≤ 75°C.
IECEx Certificate of Conformity: IECEx DEK II.0039.
IECEx Standards: IEC 60079-0:2011; IEC 60079-1:2014.
Korean Certified (KC) for Ex db IIC T6 Gb Process Temp≤75°C.
KTL Certificate Number: 12-KB4BO-0091.
Switch Type: SPDT snap switch standard, DPDT snap switch optional.
Electrical Rating: UL models: 5 A @ 125/250 VAC (V~). CSA, ATEX and IECEx models: 5 A @ 125/250 VAC (V~); 5 A res., 3 A ind. @ 30 VDC (V⎓). MV option: .1 A @ 125 VAC (V~). MT option: 5 A @125/250 VAC (V~). [MT option not UL, CSA, ATEX or IECEx].
Electrical Connections: UL models: 12-KB4BO-0091 18 AWG, 18″ (457.20 mm) long. ATEX/CSA/IECEx models: Terminal block.
Upper Body: Brass or 303 SS.
Conduit Connection: 3/4″ (19.05 mm) male NPT standard, 3/4″ (19.05) female NPT or M25 with BSPT option on junction box models.
Process Connection: 1″ (25.40 mm) male NPT or 1″ (25.40 mm) male BSPT on models without external float chamber, 1″ (25.40 mm) female NPT or 1″ (25.40 mm) female BSPT on models with external float chamber.
Mounting Orientation: Horizontal with index arrow pointing down.
Specific Gravity: See chart.
Weight: Approximately 1 lb (.5 kg) without external float chamber, 1.75 lb (.8 kg) with external float chamber.
Compliance: ATEX, CE, CSA, IECEx, KTL, UL.

MODEL CHART

Model	Body	Installation	Float Material	Process Connection	Max. Pressure psig (bar)	Min. S.G.
L6EPB-B-S-3-O	Brass	Side wall mounting	Polypropylene spherical	NPT	1000 (69)	0.9
L6EPB-B-S-3-A	Brass	Side wall mounting	304 SS cylindrical	NPT	200 (13.8)	0.5
L6EPB-B-S-3-C	Brass	Side wall mounting	304 SS spherical	NPT	350 (24.1)	0.7
L6EPB-B-S-3-B	Brass	Brass external float chamber (tee)	Polypropylene spherical	NPT	250 (17.2)	0.9
L6EPB-B-S-3-H	Brass	Brass external float chamber (tee)	304 SS spherical	NPT	250 (17.2)	0.7
L6EPS-S-S-3-O	303 SS	Side wall mounting	Polypropylene spherical	NPT	2000 (138)	0.9
L6EPS-S-S-3-A	303 SS	Side wall mounting	304 SS cylindrical	NPT	200 (13.8)	0.5
L6EPS-S-S-3-C	303 SS	Side wall mounting	304 SS spherical	NPT	350 (24.1)	0.7
L6EPS-S-S-3-S	303 SS	304 SS external float chamber (tee)	Polypropylene spherical	NPT	2000 (138)	0.9
L6EPS-S-S-3-L	303 SS	304 SS external float chamber (tee)	304 SS spherical	NPT	350 (24.1)	0.7

Note: BSPT process connection and M25 conduit connection. **Note:** To order, change eighth character in model to “4”. **Example:** L6EPB-B-S-4-A

USA: California Proposition 65
⚠**WARNING:** This product can expose you to chemicals including Lead, which is known to the State of California to cause cancer and birth defects or other reproductive harm. For more information go to www.P65Warnings.ca.gov.

FLOTECT® LIQUID LEVEL SWITCHES

Low Cost, Leak Proof Body, Excellent Chemical Resistance

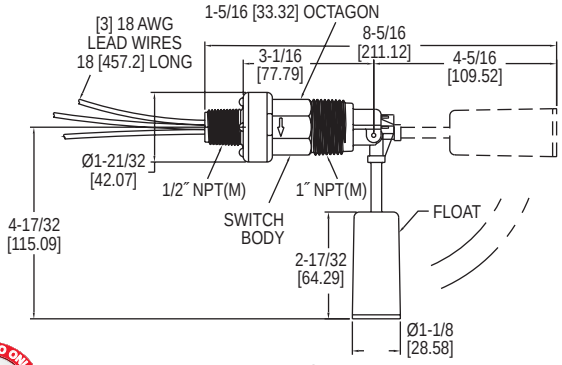

L8

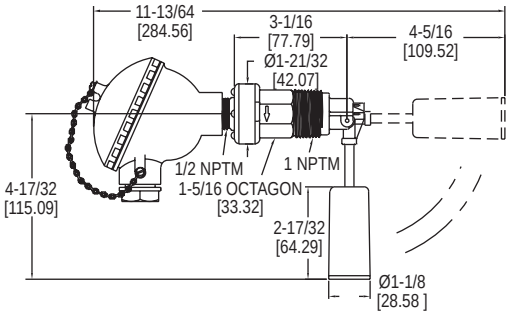

L8-WP2

The **Model L8 Flotect® Liquid Level Switches** are float switches constructed of polyphenylene sulfide, Ceramic 8 and 316 SS. This liquid level switch provides accurate set point control of liquids with specific gravities as low as 0.6.

BENEFITS/FEATURES

- Excellent chemical resistance with float constructed from durable polyphenylene sulfide and leak-proof body
- Longer life and decreased maintenance costs with liquid level snap switch, which is magnetically actuated with no direct mechanical linkage to leak or fail
- Quick and easy installation by simple placement of the unit in a horizontal position with the index arrow pointing down
- Suitable for mounting in a protected environment with UL recognitionas an industrial motor controller per UL standard 508

APPLICATIONS

- Environmental control
- Waste water
- Scrubber systems
- Holding tanks
- Cooling towers
- Chemical/petroleum processing
- Plating and washing tanks
- Sewage treatment
- Car washes
- Remediation systems
- Thermal storage systems
- HVAC and building automation systems

SPECIFICATIONS

Service: Compatible liquids.
Wetted Materials: Float and body: Polyphenylene sulfide (PPS); Pin and spring: 316 SS or Inconel®; Magnet: Ceramic 8.
Temperature Limit: 212°F (100°C).
Pressure Limit: 150 psig (10.34 bar).
Enclosure Rating: General purpose. WP/WP2 option is weatherproof.
Switch Type: SPDT snap switch. MV option is a SPDT gold contact snap switch.
Electrical Rating: 5 A @ 125/250 VAC, 5 A resistive, 3 A inductive @ 30 VDC. MV option: 1 A @ 125 VAC, 1 A resistive, 0.5 A inductive @ 30 VDC.
Electrical Connections: 18 AWG, 18″ (460 mm) long.
Conduit Connection: 1/2″ male NPT, 1/2″ female NPT on WP and WP2.
Process Connection: 1″ male NPT.
Mounting Orientation: Horizontal with index arrow pointing down.
Weight: 5 oz (0.142 kg).
Specific Gravity: 0.6 minimum.
Agency Approvals: CE, cURus.

MODEL CHART

Model	Description
L8	Level switch

OPTIONS

To order add suffix:	Description
-INC	Inconel® alloy. Inconel® alloy replaces standard 316 SS wetted parts. Wetted parts are Inconel® alloy, ceramic 8, and polyphenylene sulfide
-MV	Gold plated contacts for dry circuits. Rated 1 A @ 125 VAC; 1 A resistive, 0.5 A inductive @ 30 VDC
-WP	Weatherproof enclosure. Optional housing is phenylpolioxide and provides weatherproof protection for electrical wiring (not UL approved)
-WP2	Weatherproof enclosure. Optional housing is aluminum and provides weatherproof protection for electrical wiring (not UL approved)
Example: L8-INC	

Inconel® is a registered trademark of Huntington Alloys Corporation

Dwyer
SERIES L10

FLOTECT® MINI-SIZE LEVEL SWITCH

Easy In-wall or External Installation, Specific Gravities as Low as 0.5

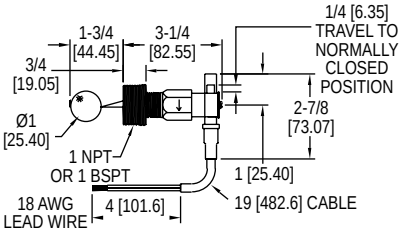

Spherical float

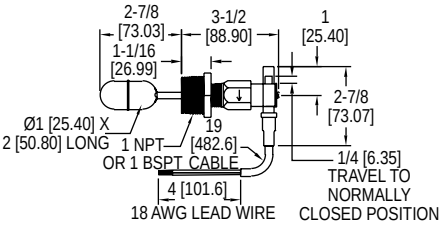

Cylindrical float

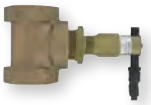

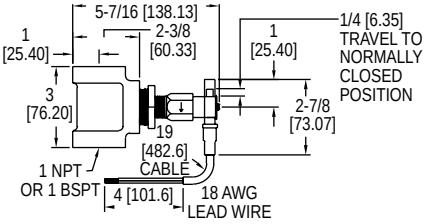

External float chamber

The **Series L10 Flotect® Mini-Size Float Switch** is a series of economical, compact liquid level floats. It is offered in brass or 303 SS bodies and external tees as well as polypropylene or 304 SS floats with 1″ NPT male threads, for direct side mounting through a half coupling, or with factory installed tee for external mounting. This series can be used in liquids with specific gravities as low as 0.5.

BENEFITS/FEATURES

- Long operating life with hermetically sealed, magnetically-actuated SPST reed switch, which is encapsulated in a polypropylene housing
- Easily toggle between normally open (NO) or normally closed (NC) with no change in the electrical connection using simple field switch adjustment
- Quick and low cost maintenance from easily replaceable switch without affecting installation
- Great value and years of reliable liquid level control with top quality materials at a low cost

APPLICATIONS

- Direct pump control for maintaining level
- Automatic tank dump operations
- Level control
- Valve control

SPECIFICATIONS

Service: Compatible liquids.
Wetted Materials: Float: Solid polypropylene or 304 SS; Body: Brass or 303 SS; Magnet: Ceramic; External float chamber (tee): None, brass, or 304 SS; Other: Lever arm, pin, spring, etc.: 301 SS, 302 SS, 316 SS.
Temperature Limit: 200°F (93°C).
Pressure Limit: Brass body: See chart; 303 SS body: Polypropylene float: 2000 psig (138 bar), Cylindrical float: 200 psig (13.8 bar), Spherical float: 350 psig (24.1 bar).
Enclosure Rating: Weatherproof, meets NEMA 4X (IP66).
Switch Type: SPST hermetically sealed reed switch. Field adjustable for NO or NC.
Electrical Rating: 1.5 A @ 24 VDC res., 0.001 A @ 200 VDC res., 0.5 A @ 120 VAC.
Electrical Connections: 18 AWG, 19″ (483 mm) long, PVC jacket. Rated 221°F (105°C).
Process Connection: 1″ male NPT or 1″ male BSPT on models without external float chamber. Change 3 in model number to 4 for 1-1/4″, to 5 for 1-1/2″, or 6 for 2″. 1″ female NPT or 1″ female BSPT on models with external float chamber.
Mounting Orientation: Horizontal with index arrow pointing down.
Specific Gravity: See chart.
Switch Enclosure: Nylon.
Weight: Approximately 10 oz (0.283 kg) without external float chamber, 2.32 lb (1.05 kg) with external float chamber.
Compliance: CE, CSA and UR.

MODEL CHART

Model	Installation	Float Material	Process Connection	Max. Pressure psig (bar)	Min. S.G.
L10-B-3-O	Side wall mounting	Polypropylene spherical	NPT	1000 (69)	0.9
L10-B-3-A	Side wall mounting	304 SS cylindrical	NPT	200 (13.8)	0.5
L10-B-3-C	Side wall mounting	304 SS spherical	NPT	350 (24.1)	0.7
L10-B-3-B	Brass tee	Polypropylene spherical	NPT	250 (17.2)	0.9
L10-B-3-H	Brass tee	304 SS spherical	NPT	250 (17.2)	0.7

OPTIONS

BSPT Process Connection and M25 Conduct Connection
Note: To order, add "-BSPT" to the end of the model number.
Example: L10-B-3-0-BSPT

303 SS Body
Note: To order, change fourth character to "S".
Example: L10-S-3-0

USA: California Proposition 65
⚠ **WARNING:** This product can expose you to chemicals including Lead, which is known to the State of California to cause cancer and birth defects or other reproductive harm. For more information go to www.P65Warnings.ca.gov.

Dwyer

SERIES F6 & F7

LEVEL SWITCHES – HORIZONTAL/SPECIALTY

Low Cost, Hermetically Sealed Contacts

HORIZONTAL

F6-HPS-11

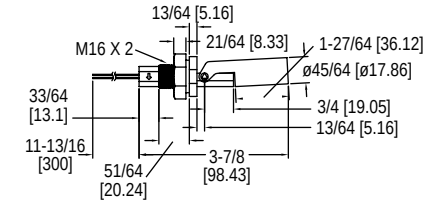

F6-HPS-21

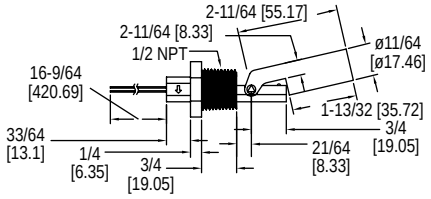

F6-HPS-31

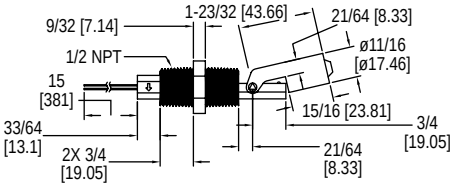

F6-MHS

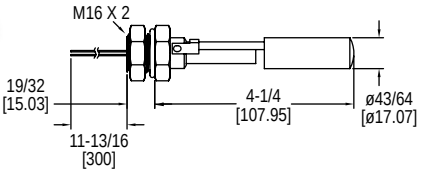

F6-MHS2

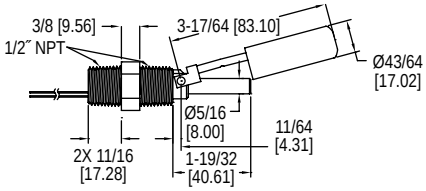

F7-HSS

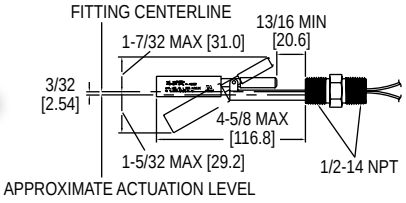

SPECIALTY

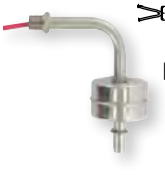

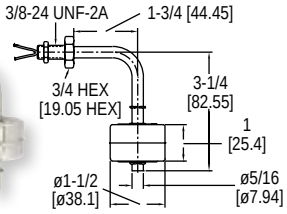

F7-SS6

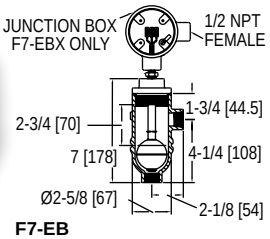

F7-EB

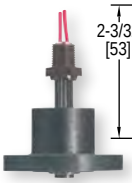

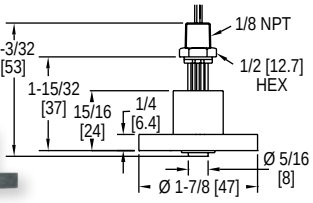

F7-LL

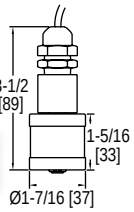

F7-WBB

The **Series F6 & F7 Horizontal and Specialty Level Switches** are designed to mount through the walls of tanks or other vessels and unique applications to provide point level indication.

BENEFITS/FEATURES
- Flexible application design with open or closed circuits for rising or falling levels
- Long product life from hermetically sealed reed switches that are actuated by magnets permanently bonded inside the float arm

APPLICATIONS
- Water level monitoring
- Oil level control
- Chemical level indication
- Sumps
- Stand pipes
- Tank level control

MODEL CHART

Model	Applications	Material Float/Stem	Temperature Limits	Pressure Limits	Min. S.G.	Electrical Rating	Wire Leads	Mtg	Weight oz (g)
F6-HPS-11	Water, oils, chemicals	Polypropylene/ polypropylene	176°F (80°C)	116 psig (8 bar)	0.60	20 VA: 0.08 A @ 240 VAC	20 AWG, 11.8″ (30 cm)	M16 x 2	1.23 (38)
F6-HPS-31	Water, oils, chemicals	Polypropylene/ polypropylene	176°F (80°C)	116 psig (8 bar)	0.60	20 VA: 0.08 A @ 240 VAC	20 AWG, 11.8″ (30 cm)	1/2″ NPT	1.41 (40)
F6-MHS	Corrosives	304 SS/304 SS	257°F (125°C)	218 psig (15 bar)	0.85	20 VA: 0.08 A @ 240 VAC	22 AWG, 11.8″ (30 cm)	M16 x 2	3.35 (95)
F6-MHS2	Water, oils, chemicals	304 SS/304 SS	257°F (125°C)	363 psig (25 bar)	0.85	50 VA: 0.7A @ 250 VAC	22 AWG, 11.8″ (30 cm)	1/2″ NPT	4.8 (136)
F7-HSS†	High temp/pressure, corrosive, expl.	316 SS/316 SS	392°F (200°C)	300 psig (20.7 bar)	0.60	30 VA: 0.14 A @ 220 VAC	22 AWG, 24″ (61 cm)	1/2″ NPT (int/ext)	3 (94)
Model	**Style/Applications**	**Material Float/Stem**	**Temperature Limits**	**Pressure Limits**	**Min. S.G.**	**Electrical Rating**	**Wire Leads**	**Mtg**	**Weight oz (g)**
F7-SS6	Bent stem/liquids with metal particles	316 SS/316 SS	300°F (149°C)	100 psig (7 bar)	0.70	20 VA: 0.08 A @ 220 VAC N.O. operation	22 AWG, 24″ (61 cm)	3/8″-24″ UNF-2A	2 (58)
F7-SS6B	Bent stem/liquids with metal particles	316 SS/316 SS	300°F (149°C)	100 psig (7 bar)	0.70	20 VA: 0.08 A @ 220 VAC N.C. operation	22 AWG, 24″ (61 cm)	3/8″-24″ UNF-2A	2 (58)
F7-EB**	Non-intrusive bottle type/ Outside tank mounting	Brass/316 SS (Brass housing)	300°F (149°C)	500 psig (34 bar)	0.75	20 VA: 0.08 A @ 240 VAC	18 AWG, 24″ (61 cm)	3/4″ NPT female	5 lb 5 oz (2.4 kg)
F7-LL	Vertical/detect levels as low as 5/8″	Polysulfone/ Buna-N	180°F (82°C)	50 psig (3 bar)	-	20 VA: 0.08 A @ 240 VAC	22 AWG, 72″ (182 cm)	1/8″ NPT male	2 (58)
F7-WBB	25´ cable, slosh shield/ Sumps, stand pipes	Brass/Buna-N	180°F (82°C)	150 psig (10 bar)	0.45	20 VA: 0.08 A @ 240 VAC	22 AWG, 25´ (7.6 m)	-	10.8 (310)

† F7-HSS is rated explosion-proof for Class I, Groups A, B, C, D; Class II, Groups E, F, G; Class III.
** Model available with normally closed switch. **Example:** F7-EBNC

USA: California Proposition 65
WARNING: This product can expose you to chemicals including Lead, which is known to the State of California to cause cancer and birth defects or other reproductive harm. For more information go to www.P65Warnings.ca.gov.

Dwyer

SERIES F6 & F7

LEVEL SWITCHES - VERTICAL

Low Cost, Reliable and Compact, Hermetically Sealed Contacts

F7-SB

F7-ST713

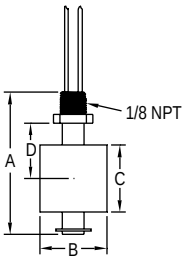

DIMENSIONS - IN (MM)				
Model	(A) Stem Length	(B) Float Diameter	(C) Float Height	(D) Actuation from Hex①
F7-SB	2.75 [70]	1.38 [35]	1.13 [29]	1.2 [31]
F7-SS2	2.06 [52]	1.0 [25]	1.0 [25]	0.73 [19]
F6-SS	2.17 [55]	1.11 [28]	1.11 [28]	–
F7-MPP	1.63 [41]	0.63 [16]	0.63 [16]	0.47 [12]
F7-PP	2.18 [55]	1.18 [30]	1.0 [25]	0.69 [18]
F7-BT	2.18 [55]	1.18 [30]	1.0 [25]	0.69 [18]
F7-PVC	3.44 [87]	1.5 [38]	1.81 [46]	0.75 [19]
F7-T1	3.47 [88]	2.13 [54]	1.94 [49]	0.92 [22]
F7-ST713	3.38 [86]	2.06 [52]	2.06 [52]	1.09 [28]
F7-ST714	3.38 [86]	2.06 [52]	2.06 [52]	1.09 [28]

①Distance between hex and liquid (S.G. = 1.0) level at actuation point will vary with specific gravity changes.

The **Series F6 & F7 Vertical Level Switches** are designed to be mounted at the maximum or minimum level point to provide level indication and control. Models are shipped with normally open switch contacts which close as the float rises toward the mounting threads.

BENEFITS/FEATURES
- Simple installation with low cost and reliable design
- Flexible application design with open or close circuits for rising or falling levels with vertical models that mount internally, oriented within 30° of vertical, or select optional fittings for external mounting
- Long product life from hermetically sealed reed switches that are actuated by magnets permanently bonded inside the float arm
- Switch ratings are suitable for many solid state control systems and monitors or alarms
- Variety of application use with high current, simple relay interfaces

APPLICATIONS
- Water level monitoring
- Oil level control
- Chemical level indication
- Sumps
- Stand pipes
- Tank level control
- High viscosity liquids

ACCESSORIES - FOR EXTERNAL MOUNTING OF VERTICAL MODELS	
Model	Description
A-347	1/8″ x 1-1/4″ NPT carbon steel adaptor
A-347-SS	1/8″ x 1-1/4″ NPT 316 SS adaptor
A-348	1/8″ x 1-1/2″ NPT carbon steel adaptor

MODEL CHART

Model	Applications	Material Float/Stem	Temperature Limits	Pressure Limits	Min. S.G.	Electrical Rating	Wire Leads	Mtg NPT (M)	Weight oz (g)
F7-SB*	General purpose	Buna-N and epoxy/316 SS	220°F (105°C)	150 psig (10 bar)	0.60	50 VA: 1.5 A, 200 V max DC or AC peak	22 AWG 18″ (45 cm)	1/8″	2 (58)
F7-SS2*	High temp/pressure, corrosives	316 SS (CYC)/316 SS	300°F (149°C)	450 psig (31 bar)	0.75	50 VA: 1.5 A, 200 V max DC or AC peak	22 AWG 18″ (45 cm)	1/8″	1.2 (34)
F6-SS	Corrosives	316 SS/316 SS	257°F (125°C)	218 psig (15 bar)	0.65	20 VA: 0.08 A @ 240 VAC	20 AWG 11.8″ (30 cm)	1/8″	1.59 (45)
F7-MPP**	Broad chemical compatibility	Polypropylene/ polypropylene	180°F (82°C)	100 psig (6.89 bar)	0.90	10 VA: 0.1 A @ 100 VAC	22 AWG 24″ (61 cm)	1/8″	0.8 (23)
F7-MPP-NO**	Broad chemical compatibility	Polypropylene/ polypropylene	176°F (80°C)	100 psig (6.89 bar)	0.90	50 VA: 0.2 A @ 240 VAC	22 AWG 24″ (61 cm)	1/8″	0.8 (23)
F7-PP*	Broad chemical compatibility	Polypropylene and epoxy/ polypropylene	220°F (105°C)	100 psig (6.89 bar)	0.60	30 VA: 0.14 A @ 220 VAC	22 AWG 24″ (61 cm)	1/8″	0.8 (23)
F7-BT*	Oils and fuels	Buna-N and epoxy/PBT***	220°F (105°C)	150 psig (10 bar)	0.45	30 VA: 0.14 A @ 220 VAC	22 AWG 24″ (61 cm)	1/8″	0.7 (20)
F7-PVC	Chemical and plating	CPVC/CPVC	180°F (82°C)	15 psig (1 bar)	0.85	20 VA: 0.08 A @ 240 VAC	22 AWG 24″ (61 cm)	1/4″	5 (140)
F7-T1	Viscous, sticky or corrosive liquids	PTFE/TFE	300°F (149°C)	30 psig (2 bar)	0.80	20 VA: 0.08 A @ 240 VAC	22 AWG 24″ (61 cm)	1/4″	6 (170)
F7-ST713	Oils, water and chemicals	316 SS/316 SS	300°F (149°C)	750 psig (52 bar)	0.80	20 VA: 0.08 A @ 240 VAC	22 AWG 24″ (61 cm)	1/4″	6 (170)

*UL listed. **F7-MPP is normally closed/F7-MPP-NO is normally open. ***PBT-Polybutylene terephthalate.

USA: California Proposition 65
⚠**WARNING:** This product can expose you to chemicals including Lead, which is known to the State of California to cause cancer and birth defects or other reproductive harm. For more information go to www.P65Warnings.ca.gov.

MODEL F7-LPP

VERTICAL LEVEL FLOAT SWITCH

Low Cost, Hermetically Sealed Contacts

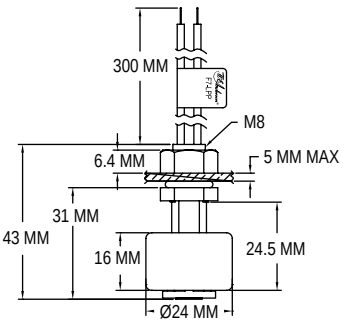

The **Model F7-LPP Vertical Level Float Switch** provides simple, cost-effective control of the liquid level within a tank. Switch ratings are suitable for high current solid-state control systems and monitors or alarms. The F7-LPP's mechanically rugged polypropylene construction is ideal for use in a variety of applications due to its heat and chemical resistance.

BENEFITS/FEATURES
- Fast start up due to simple installation
- Long product life due to hermetically sealed, rugged construction reed switches with permanently bonded magnets
- Increase application use by easily rotating the float to reverse switch action
- Meet high demand applications with high current switch

APPLICATIONS
- Water level monitoring
- Oil level control
- Chemical level indication
- Sumps
- Standpipes
- Tank level control
- High viscosity liquids

SPECIFICATIONS

Service: Compatible liquids.
Wetted Materials: Float/stem: Polypropylene; O-ring: Silicone.
Temperature Limits: -4 to 176°F (-20 to 80°C).
Pressure Limit: 72.5 psi (5 bar).
Enclosure Rating: IP67.
Switch Type: SPST field adjustable NO or NC (supplied NO).
Electrical Rating: 140 VAC/200 VDC, 1.2 A max.
Electrical Connection: 24 AWG, 11.8″ (30 cm) long.
Process Connection: M8 threads with included fastening nut.
Float Density: 0.67.
Specific Gravity: 0.8.
Weight: 0.38 oz (11 g).

MODEL CHART	
Model	Description
F7-LPP	Vertical level float switch

Dwyer

SERIES F7-MQ

QUICK-SHIP MULTI-STATION LEVEL SWITCH

Fast Delivery, Customized, Up to Four Actuation Levels

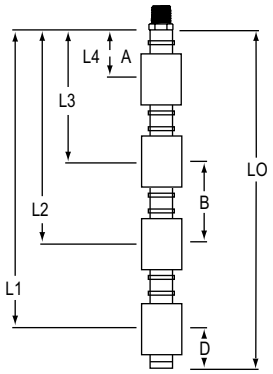

ACTUATION LEVELS		
A	B	D
1-1/2″ (38.10 mm)	3″ (76.20 mm)	2″ (50.80 mm)
Each switching point requires one float. A = Minimum distance from actuation point to bottom of mounting B = Minimum distance between actuation levels D = Minimum distance from end of unit to lowest actuation point		

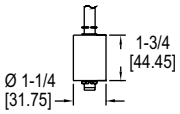

F1 float dimensions

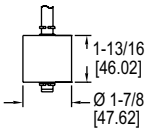

F2 float dimensions

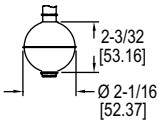

F3 float dimensions

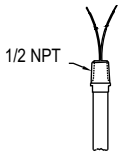

Type 1 mounting dimensions

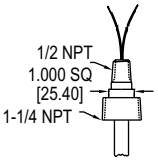

Type 2 mounting dimensions

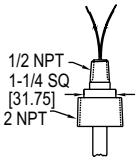

Type 3 mounting dimensions

The **Series F7-MQ Quick-Ship Multi-Station Level Switch** provides a customized level switch to meet application requirements. Switches can be configured with up to four different control points and stem lengths up to 72″ (1.82 m). Stems and floats are available in 316 stainless steel or brass, SPST or SPDT switches, and choice of mountings.

BENEFITS/FEATURES
- Customized level indication quickly and affordably
- Rugged construction with multiple options yielding exceptional versatility
- Capable of supporting larger, more buoyant floats
- Durable construction asserts long reliability in contaminated or turbulent media

APPLICATIONS
- Water level monitoring
- Oil level control
- Tank level control
- Diesel level monitoring

SPECIFICATIONS

Service: Compatible liquids.
Temperature Limits: F1 and F2 with water: 0 to 180°F (-18 to 82°C); Oil: -40 to 230°F (-40 to 110°C); F3: -40 to 300°F (-40 to 149°C).
Electrical Connections: 24″ (61 cm) free leads; #22 AWG TFE and #18 AWG polymeric.
Mounting Orientation: Vertical ±30°.

MODEL CHART

Example	F7-MQ	B	1	-4	F3	3	-07.00	-11.00	-15.00	-20.00	-24.00	J	F7-MQB1-4F33-07.00-11.00-15.00-20.00-24.00-J		
Construction	F7-MQ												Multi-station level, 1 to 4 switch points		
Stem and Connection Material		B S											Brass with beryllium copper stops 316 SS with SS ARMCO PH-15-7MO stops		
Connection Type			1 2 3										1/2″ NPT (float F2, F3 only) 1-1/4″ NPT (float F1 only) 2″ NPT (float F2, F3 only)		
Switch Points				#									Put 1 to 4 for the number of switch points desired		
Float Type					F1 F2 F3								**Material** Buna-N Buna-N 316 SS	**Min. s.g.** 0.75 0.55 0.75	**Max. Pressure** 150 psi (10.3 bar) 150 psi (10.3 bar) 750 psi (51.7 bar)
Switch Type*						1 3							SPST, .17 A @ 120 VAC, .08 A @ 240 VAC, .13 A @ 120 VDC, .06 A @ 240 VDC SPDT, .17 A @ 120 VAC, .08 A @ 240 VAC, .13 A @ 120 VDC, .06 A @ 240 VDC		
Set Point Distance, L4†							00.00						In inches referenced from bottom of process connection		
Set Point Distance, L3†								00.00					In inches referenced from bottom of process connection		
Set Point Distance, L2†									00.00				In inches referenced from bottom of process connection		
Set Point Distance, L1†										00.00			In inches referenced from bottom of process connection		
Overall Length, L0											00.00		Min. length is L1+D; Max. length with connection length is 72″ (1.82 m)		
Options												J	Junction box for wire leads, NEMA 4 (not available with connection type 1)		

NO switch is standard. For NC place an "" after the corresponding set point distance in the model number.
†No numbers needed beyond the number of switches specified.

Note: Models are built to your specifications.

USA: California Proposition 65
⚠**WARNING:** This product can expose you to chemicals including Lead, which is known to the State of California to cause cancer and birth defects or other reproductive harm. For more information go to www.P65Warnings.ca.gov.

Dwyer

SERIES F7-MM

MINIATURE MULTI-STATION LEVEL SWITCH

Custom, Lightweight, Low Cost, 316 Stainless Steel or Buna-N Floats

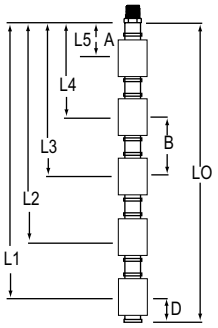

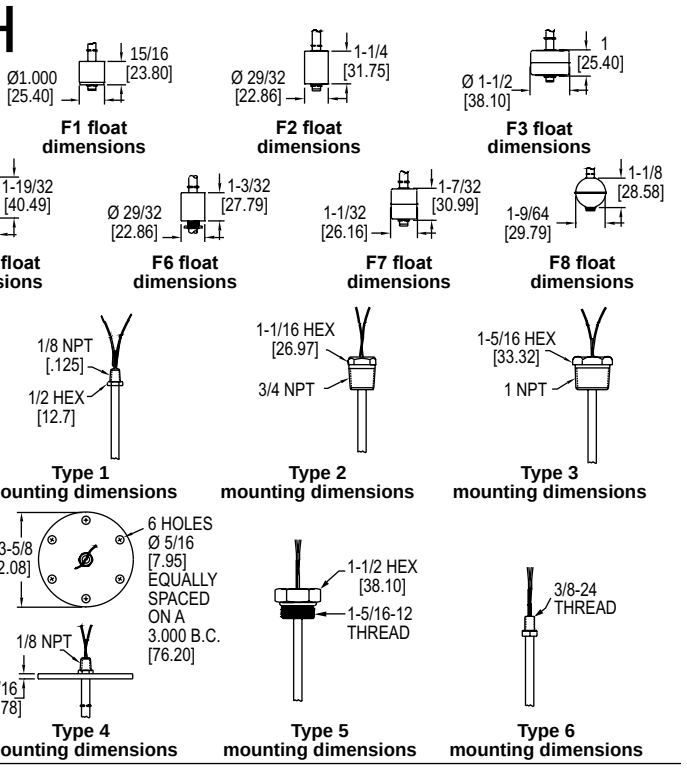

ACTUATION LEVELS			
Float Type	**A**	**B**	**D**
F1	7/8″	1-3/4″	3/4″
F2	3/4″	1-7/8″	1-1/16″
F3	3/4″	1-13/16″	15/16″
F4	13/16″	2-7/16″	1-7/16″
F5	9/16″	2-7/16″	1-3/4″
F6	15/16″	1-7/8″	7/8″ (NO); 1-3/16″ (NC)
F7	13/16″	2″	1-1/8″
F8	3/4″	1-7/8″	1-1/16″

Each switching point requires one float.
A = Minimum distance from actuation point to bottom of mounting
B = Minimum distance between actuation levels
D = Minimum distance from end of unit to lowest actuation point

The **Series F7-MM Miniature Multi-Station Level Switch** provides a customized level switch to meet application requirements in a miniature size. Control up to five different level points across a maximum length of 48″ (121 cm). Stems and mounting fixtures are available in 316 SS or brass.

BENEFITS/FEATURES
- Customized miniature level indication in a compact, lightweight design ideal for tanks less than 4′ (1.2 m) deep
- Rugged construction with multiple options yielding exceptional versatility
- Miniature custom level switches are sturdy, compact and lightweight yet still rugged and durable

APPLICATIONS
- Water level monitoring
- Oil level control
- Tank level control
- Diesel level monitoring

SPECIFICATIONS

Service: Compatible liquids.
Wetted Materials: Stem, connection, and float.
Temperature Limits: F1 and F2: Water, 180°F (82.2°C); Oil, -40 to 250°F (-40 to 121.1°C). All other floats: -40 to 300°F (-40 to 148.9°C).
Electrical Connection: 24″ (61 cm) free leads #22 AWG, TFE jacketed.
Mounting Orientation: Vertical ±30°.

MODEL CHART

Example	**F7-MM**	**B**	**1**	**-5**	**F1**	**1**	**-03.00**	**-07.00**	**-11.00**	**-15.00**	**-20.00**	**-25.00**	**F7-MMB1-5F11-03.00-07.00-11.00-15.00-20.00-25.00**		
Construction	F7-MM												Multi-station level, 1 to 5 switch points		
Stem and Connection Material		B S											Brass with beryllium copper stops 316 SS with SS ARMCO PH-15-7MO stops		
Connection Type			1 2 3 4 5 6										1/8″ NPT 3/4″ NPT (cannot be used with float F1, F3, F7 and F8) 1″ NPT (cannot be used with float F3) 3-5/8″ flange [maximum pressure is 50 psi (3.45 bar)] 1-5/16-12UNF-2A (cannot be used with float F3) 3/8-24		
Switch Points				#									Put 1 to 5 for the number of switch points desired		
Float Type					F1 F2 F3 F4 F5 F6 F7 F8								**Material** Buna-N Buna-N 316 SS 316 SS 316 SS PTFE 316 SS 316 SS	**Min. s.g.** 0.45 0.60 0.70 0.85 1.10 0.65 0.85 0.90	**Max. Pressure** 300 psi (20.68 bar) 250 psi (17.24 bar) 100 psi (6.89 bar) 150 psi (10.34 bar) 400 psi (27.58 bar) 1000 psi (68.95 bar) 275 psi (18.96 bar) 600 psi (41.37 bar)
Switch Type*						1 2							SPST, .17 A @ 120 VAC, .08 A @ 240 VAC, .13 A @ 120 VDC, .06 A @ 240 VDC SPST, .8 A @ 120 VAC, .4 A @ 240 VAC		
Set Point Distance, L5†							00.00						In inches referenced from bottom of process connection		
Set Point Distance, L4†								00.00					In inches referenced from bottom of process connection		
Set Point Distance, L3†									00.00				In inches referenced from bottom of process connection		
Set Point Distance, L2†										00.00			In inches referenced from bottom of process connection		
Set Point Distance, L1†											00.00		In inches referenced from bottom of process connection		
Overall Length, L0												00.00	Min. length is L1+D; Max. overall length is 48″ (121 cm)		

NO switch is standard. For NC place an "" after the corresponding set point distance in the model number.
†No numbers needed beyond the number of switches specified.

Note: Models are built to your specifications.

USA: California Proposition 65
⚠**WARNING:** This product can expose you to chemicals including Lead, which is known to the State of California to cause cancer and birth defects or other reproductive harm. For more information go to www.P65Warnings.ca.gov.

Dwyer

SERIES F7-MS

MULTI-STATION LEVEL SWITCH

Customize To Fit Application, Up to Six 316 Stainless Steel or Buna-N Floats

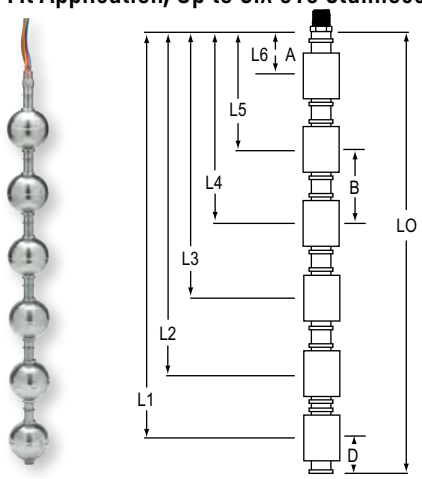

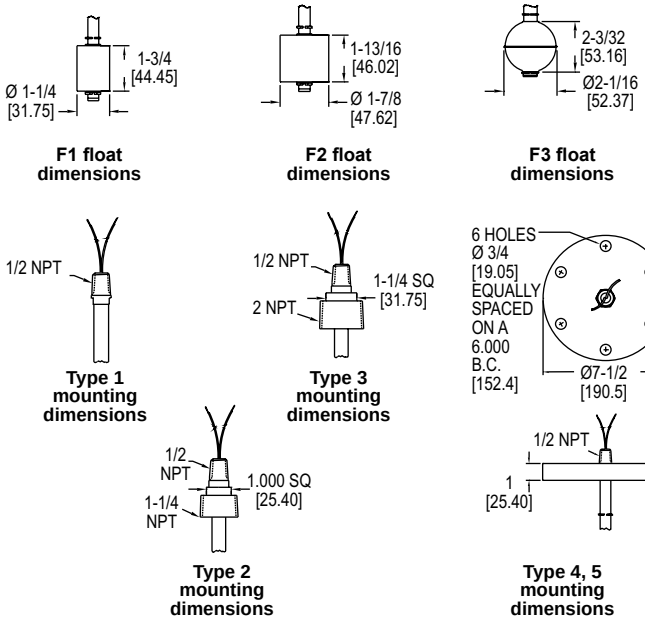

ACTUATION LEVELS		
A	B	D
1-1/2″ (38.10 mm)	3″ (76.20 mm)	2″ (50.80 mm)

Each switching point requires one float.
A = Minimum distance from actuation point to bottom of mounting
B = Minimum distance between actuation levels
D = Minimum distance from end of unit to lowest actuation point

The **Series F7-MS Multi-Station Level Switch** provides a customized level switch to meet application requirements. Switches can be configured with up to six different control points and stem lengths up to 140″ (3.56 m). Stems and floats are available in 316 SS or brass, SPST or SPDT switches, and choice of mountings.

BENEFITS/FEATURES
- Customized level indication quickly and affordably
- Rugged construction with multiple options yielding exceptional versatility
- Capable of supporting larger, more buoyant floats
- Durable construction asserts long reliability in contaminated or turbulent media

APPLICATIONS
- Water level monitoring
- Oil level control
- Tank level control
- Diesel level monitoring

SPECIFICATIONS

Service: Compatible liquids.
Wetted Materials: Stem, connection, and float.
Temperature Limits: Buna-N floats: 180°F (82.2°C) in water, -40 to 230°F (-40 to 110°C) in oil; SS floats: -40 to 300°F (-40 to 148.9°C).
Wire Leads: 24″ (61 cm) free leads; #22 AWG, TFE jacketed, and #18 AWG polymeric.
Mounting Orientation: Vertical ±30°.

MODEL CHART

Example	F7-MS	B	1	-5	F3	1	-04.00	-07.00	-11.00	-15.00	-20.00		-24.00	J	F7-MSB1-5F31-04.00-07.00-11.00-15.00-20.00-24.00-J
Construction	F7-MS														Multi-station level, 1 to 6 switch points
Stem and Connection Material		B S													Brass with beryllium copper stops 316 SS with SS ARMCO PH-15-7MO stops
Connection Type			1 2 3 4 5												1/2″ NPT (float F2, F3 only) 1-1/4″ NPT (float F1 only) 2″ NPT 3″ 150# flange carbon steel (conn. material S only, float F2, F3 only) Max. pressure: 150 psi (10.3 bar) 3″ 150# flange 316 SS (conn. material S only, float F2, F3 only) Max. pressure: 150 psi (10.3 bar)
Switch Points				#											Put 1 to 6 for the number of switch points desired
Float Type					F1 F2 F3										**Material** / **Min. s.g.** / **Max. Pressure** Buna-N / 0.75 / 150 psi (10.3 bar) Buna-N / 0.55 / 150 psi (10.3 bar) 316 SS / 0.75 / 750 psi (51.7 bar); Units >72″: 300 psi (20.7 bar)
Switch Type*						1 2 3									SPST, .17 A @ 120 VAC, .08 A @ 240 VAC, .13 A @ 120 VDC, .06 A @ 240 VDC SPST, .8 A @ 120 VAC, .4 A @ 240 VAC SPDT, .17 A @ 120 VAC, .08 A @ 240 VAC, .13 A @ 120 VDC, .06 A @ 240 VDC
Set Point Distance, L6†							00.00								In inches referenced from bottom of process connection
Set Point Distance, L5†								00.00							In inches referenced from bottom of process connection
Set Point Distance, L4†									00.00						In inches referenced from bottom of process connection
Set Point Distance, L3†										00.00					In inches referenced from bottom of process connection
Set Point Distance, L2†											00.00				In inches referenced from bottom of process connection
Set Point Distance, L1†												00.00			In inches referenced from bottom of process connection
Overall Length, L0													00.00		Min. length is L1+D; Max. length with connection type 1: 36″ (91.4 cm), type 2: 60″ (152.4 cm) and types 3, 4, 5: 140″ (355.6 cm)
Options														J	Junction box for wire leads, NEMA 4 (not available with connection type 1)

NO switch is standard. For NC place an "" after the corresponding set point distance in the model number.
†No numbers needed beyond the number of switches specified.

Note: Models are built to your specifications.

USA: California Proposition 65
⚠**WARNING:** This product can expose you to chemicals including Lead, which is known to the State of California to cause cancer and birth defects or other reproductive harm. For more information go to www.P65Warnings.ca.gov.

Dwyer

SERIES 123 & 125

BOILER WATER LEVEL CONTROL

Heavy Duty, Cast Iron Chamber

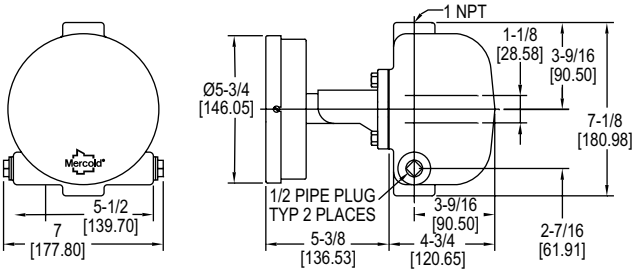

The **Series 123 & 125 Boiler Water Level Control** is designed for boiler applications, the Model 123 is primarily used for low water cut-off or feed-water control. The 125 offers the same long lasting service with a direct action mercury switch movement that provides a close deadband where needed.

BENEFITS/FEATURES
- Special snap action switch mechanism options eliminates frequent operation due to surging water level
- Transparent cover provides convenient visible operation of the switch
- Flanged chamber for easy clean out and replacement of float or switch mechanism without removing the unit from piping

APPLICATIONS
- Boiler low water cut-off
- Boiler feed-water control
- Condensate tanks
- Deaerators

MODEL CHART	
Model	**Switch Type**
123-153	SPDT mercury
123-7000-153	SPDT snap

SPECIFICATIONS

Service: Compatible liquids. Cast iron is not for use with lethal or flammable substances either liquid or gaseous.
Wetted Materials: Body: Cast iron; Float: 304 SS; Trim and packing gland: Brass; Packing: Carbon; Body gasket: Carbon.
Temperature Limit: Ambient temperature: 212°F (100°C); Process temperature: 365°F (185°C).
Pressure Limit: 150 psig (10.34 bar).
Enclosure Rating: General purpose. Optional weatherproof.
Switch Type: SPDT snap switch or mercury switch. Optional DPDT or two stage.
Electrical Rating: Snap switch: 12 A @ 120 VAC, 5 A @ 240 VAC, 0.5 A @ 125 VDC resistive, 0.25 A @ 250 VDC resistive; Mercury switch: 4 A @ 120 VAC/DC, 2 A @ 240 VAC/DC.
Electrical Connections: Screw terminal.
Conduit Connection: 7/8″ (22.23 mm) hole for 1/2″ (12.7 mm) conduit.
Process Connections: 1″ female NPT.
Mounting Orientation: Vertical.
Deadband: Approximately 1-1/2″ (38.1 mm).
Specific Gravity: 0.88 min.
Options: Manual reset.
Weight: 20 lb (9.1 kg).
Compliance: CSA, UL. (Snap switch is not rated).

SERIES 102 & 1102

FLANGED CHAMBER TYPE LEVEL CONTROL

Operating Pressures to 300 PSIG

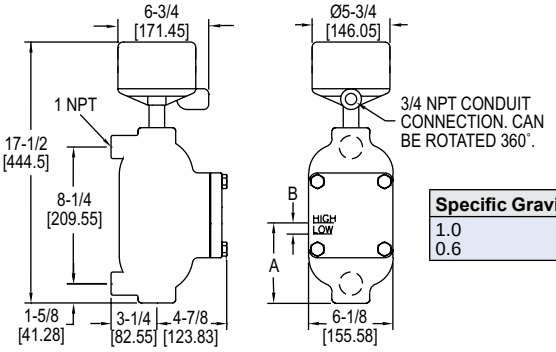

Specific Gravity	A	B
1.0	5-1/16 [129 mm]	3/4 [19 mm]
0.6	5-13/16 [148 mm]	1 [25.4 mm]

The **Series 102 & 1102 Flanged Chamber Type Level Control** is external cage type level switches which are self-contained in a side mount body. The 102 series will operate to a minimum specific gravity of 0.60 and the 1102 series will operate to a specific gravity of 0.40. These series contain a stainless steel float and offer a choice of cast iron, cast steel, or cast 316 stainless steel float chamber.

BENEFITS/FEATURES
- Unique design allows the simple removal of four bolts from the inspection plate to examine the float and chamber for cleaning or wear without disconnecting the piping or electrical circuitry
- Electrical enclosures provide general purpose, weatherproof, explosion-proof or explosion-proof/vapor proof capability as well as cost effective cast 316 stainless steel float chamber option
- Electrical circuits using hermetically sealed snap action or mercury contacts are available in a variety of actions including SPST, SPDT, DPDT and DPST combinations
- The 102 design features three 1″ NPT process connections for side/side or side/bottom piping allowing the bottom 1″ NPT connection to be used as a drain when using the side/side process connection

APPLICATIONS
- Pressure or vacuum vessels
- Chemical processing plants
- Steam and electric generating stations
- Hydraulic accumulators
- Vapor-liquid separators
- Scrubbers
- Oil refineries
- Storage tanks

MODEL CHART	
Model	**Switch Type**
102-WT-4810-C-60	SPDT mercury
102-WT-7810-C-60	SPDT snap
102-WT-7810HM-C-60	SPDT hermetically sealed snap

SPECIFICATIONS

Service: Compatible liquids. Cast iron is not for use with lethal or flammable substances either liquid or gaseous.
Wetted Materials: Body: Cast iron. Optional cast steel or 316 SS; Float and trim: 303 SS, 304 SS, 316 SS, and 430 SS. Option of all 316 SS; Body gasket: Carbon.
Temperature Limit: Ambient Temperature: 212°F (100°C); Process Temperature: 425°F (218°C).
Pressure Limit: 300 psig (20.7 bar). Optional rating to 400 psig (27.6 bar).
Enclosure Rating: NEMA 4X (IP66). Optional general purpose or explosion-proof.
Repeatability: ±1/4″ (6.4 mm).
Switch Type: SPDT snap switch, hermetically sealed snap switch, or mercury switch. Optional DPDT or two stage.
Electrical Rating: Snap switch: 12 A @ 120 VAC, 5 A @ 240 VAC, 0.5 A @ 125 VDC resistive, 0.25 A @ 250 VDC resistive; Hermetically sealed snap switch: 5 A @ 125 VAC, 5 A @ 240 VAC, 5 A @ 30 VDC resistive; Mercury switch: 4 A @ 120 VAC/DC, 2 A @ 240 VAC/DC. Higher contact ratings available for the mercury switch.
Electrical Connections: Screw terminal.
Conduit Connection: 3/4″ female NPT.
Process Connections: 1″ female NPT.
Mounting Orientation: Vertical.
Set Point Adjustment: ±1″ (25.4 mm).
Specific Gravity: 0.6 min.
Weight: 35 lb (15.9 kg).
Compliance: UL.

USA: California Proposition 65
⚠**WARNING:** This product can expose you to chemicals including Lead, which is known to the State of California to cause cancer and birth defects or other reproductive harm. For more information go to www.P65Warnings.ca.gov.

Dwyer

SERIES CFS2

CABLE FLOAT SWITCH

Mercury-Free, UL/CSA Approved Options

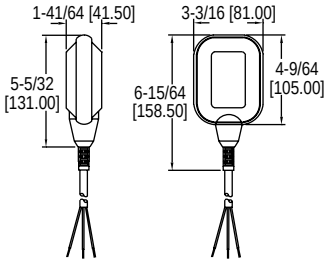

The **Series CFS2 Cable Float Switch** is a mechanically actuated floating switch intended to activate electrical components, such as pumps, to start and stop automatically. Optional cables are available. Contact factory for cable length options ranging from 10 to 70´ (3 to 21 m).

BENEFITS/FEATURES
- High reliability with mercury-free, magnetic, mechanical internal design
- Economical pricing with multiple option available for increased versatility
- Easy installation with counterweights and cable hangers to suit a variety of mounting applications

APPLICATIONS
- Water level monitoring
- Tank level control
- High or low level alarm
- Municipal water control
- Industrial water control
- Filling or draining reservoirs and tanks
- Pump automation

SPECIFICATIONS

Service: Compatible liquids.
Wetted Materials: Enclosure: Polypropylene; Cable: See model chart.
Temperature Limits: 32 to 122°F (0 to 50°C).
Pressure Limits: 14.5 psi (1 bar).
Enclosure Rating: IP68.
Switch Type: See model chart.
Electrical Rating: CFS2-XXBXX-XX: 10 (8) A @ 250 VAC; CFS2-XXDXX-XX: 1 HP @ 125 VAC 16 FLA; 2 HP @ 250 VAC 12 FLA.
Shipping Weight: Enclosure: 5.43 oz (154 g); Cable: 0.77 oz (21.27 g) per ft.
Compliance: See model chart.

ACCESSORIES

Model	Description
A-457	7.76 oz (220 g) counterweight
A-459	Cable hanger

MODEL CHART

Model	Cable Type	Approvals	Switch Type	Cable Length	Model	Cable Type	Approvals	Switch Type	Cable Length
CFS2-ONBPN-20	PVC	CE	SPST NO	20´ (6.10 m)	**CFS2-DNBPN-40**	PVC	CE	SPDT	40´ (12.19 m)
CFS2-ONBPN-30	PVC	CE	SPST NO	30´ (9.14 m)	**CFS2-DNBPN-50**	PVC	CE	SPDT	50´ (15.24 m)
CFS2-ONBPN-40	PVC	CE	SPST NO	40´ (12.19 m)	**CFS2-DNBPN-60**	PVC	CE	SPDT	60´ (19.29 m)
CFS2-ONBPN-50	PVC	CE	SPST NO	50´ (15.24 m)	**CFS2-DNBPN-80**	PVC	CE	SPDT	80´ (24.38 m)
CFS2-CNBPN-20	PVC	CE	SPST NC	20´ (6.10 m)	**CFS2-DNBPN-100**	PVC	CE	SPDT	100´ (30.48 m)
CFS2-CNBPN-30	PVC	CE	SPST NC	30´ (9.14 m)	**CFS2-OGDSN-20**	SJOW	UL/CSA	SPST NO	20´ (6.10 m)
CFS2-CNBPN-40	PVC	CE	SPST NC	40´ (12.19 m)	**CFS2-OGDSN-30**	SJOW	UL/CSA	SPST NO	30´ (9.14 m)
CFS2-CNBPN-50	PVC	CE	SPST NC	50´ (15.24 m)	**CFS2-OGDSN-40**	SJOW	UL/CSA	SPST NO	40´ (12.19 m)
CFS2-DNBPN-7	PVC	CE	SPDT	7´ (2.13 m)	**CFS2-OGDSN-50**	SJOW	UL/CSA	SPST NO	50´ (15.24 m)
CFS2-DNBPN-10	PVC	CE	SPDT	10´ (3.05 m)	**CFS2-CGDSN-20**	SJOW	UL/CSA	SPST NC	20´ (6.10 m)
CFS2-DNBPN-15	PVC	CE	SPDT	15´ (4.57 m)	**CFS2-CGDSN-30**	SJOW	UL/CSA	SPST NC	30´ (9.14 m)
CFS2-DNBPN-20	PVC	CE	SPDT	20´ (6.10 m)	**CFS2-CGDSN-40**	SJOW	UL/CSA	SPST NC	40´ (12.19 m)
CFS2-DNBPN-30	PVC	CE	SPDT	30´ (9.14 m)	**CFS2-CGDSN-50**	SJOW	UL/CSA	SPST NC	50´ (15.24 m)

SERIES FSW2

FREE-FLOATING LEVEL SWITCH

Designed for Industrial Applications, Mercury-Free, Self Counter-Weighted

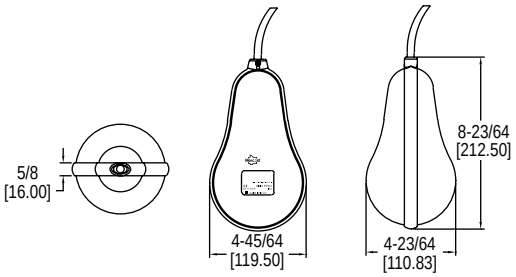

The **Series FSW2 Free-Floating Level Switch** is a self-counterweighted, mechanically actuated floating switch intended to activate electrical components, such as pumps, to start and stop automatically. Optional cables are available. Contact factory for cable length options ranging from 10 to 70´ (3 to 21 m).

BENEFITS/FEATURES
- Body is free of any irregularities allowing substances to effortlessly glide off and consists of a double airtight chamber with high-pressure melted polypropylene re-injection sealing to ensure a perfect seal reducing maintenance events
- High reliability with mercury-free, magnetic, mechanical internal design
- Economical pricing with multiple option available for increased versatility
- Seamless installation with self-counterweighted body and cable hangers to suit a variety of mounting applications

APPLICATIONS
- Wastewater level monitoring
- Tank level control
- High or low level alarm
- Municipal wastewater control
- Industrial wastewater control

SPECIFICATIONS

Service: Compatible liquids, slurries.
Wetted Materials: Enclosure: Polypropylene; Cable: PVC.
Operating Temperature: 32 to 122°F (0 to 50°C).
Pressure Limits: 29 psi (2 bar).
Enclosure Rating: IP68.
Switch Type: See model chart.
Electrical Rating: 10 (3) A @ 250 VAC.
Mounting Orientation: Vertical.
Shipping Weight: Enclosure: 2.4 lb (1100 g); Cable: 0.77 oz (21.27 g) per ft.
Compliance: CE.

ACCESSORIES

Model	Description
A-459	Cable hanger

MODEL CHART

Model	Switch Type	Cable Length ft (m)	Model	Switch Type	Cable Length ft (m)
FSW2-ONPN-20	SPST NO	20 (6.10)	**FSW2-DNPN-10**	SPDT	10 (3.05)
FSW2-ONPN-30	SPST NO	30 (9.14)	**FSW2-DNPN-15**	SPDT	15 (4.57)
FSW2-ONPN-40	SPST NO	40 (12.19)	**FSW2-DNPN-20**	SPDT	20 (6.10)
FSW2-ONPN-50	SPST NO	50 (15.24)	**FSW2-DNPN-30**	SPDT	30 (9.14)
FSW2-CNPN-20	SPST NC	20 (6.10)	**FSW2-DNPN-40**	SPDT	40 (12.19)
FSW2-CNPN-30	SPST NC	30 (9.14)	**FSW2-DNPN-50**	SPDT	50 (15.24)
FSW2-CNPN-40	SPST NC	40 (12.19)	**FSW2-DNPN-60**	SPDT	60 (18.29)
FSW2-CNPN-50	SPST NC	50 (15.24)	**FSW2-DNPN-80**	SPDT	80 (24.38)
			FSW2-DNPN-100	SPDT	100 (30.48)

Dwyer

SERIES OLS

OPTITROL® OPTICAL LEVEL SWITCHES

Low Cost, Compact, LED Indication, No Moving Parts

OLS-10

OLS-11

OLS-12

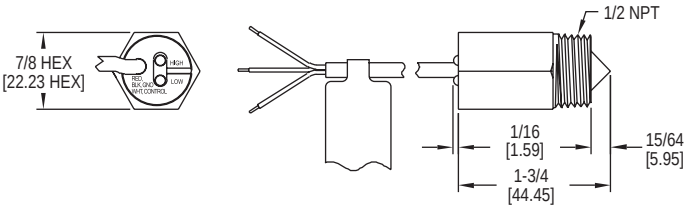

The **Series OLS Optitrol® Optical Level Switches** are low cost, rugged optical level switches that indicate the presence or absence of liquid via infrared light that is reflected back through the prism lens. This series offers three optional materials, 316 stainless steel, polysulfone and PFA.

BENEFITS/FEATURES
- Provides rapid response while employing no moving parts for stable process control
- Bright red and green LED's indicate the presence or absence of liquid for true, local indication
- Three optional materials, 316 stainless steel, polysulfone and PFA provide application flexibility
- Compact switch can be quickly mounted horizontally or vertically for each installation

APPLICATIONS
- Food and beverage systems
- Liquid holding tanks
- Hydraulic reservoirs
- Pharmaceutical systems
- Air conditioning systems
- Sumps

SPECIFICATIONS

Service: Noncoating compatible liquids.
Wetted Materials: See model chart.
Temperature Limit: Process: OLS-10, 11: 200°F (93.3°C), OLS-12: 120°F (48.9°C); Ambient: OLS-10, 11: 175°F (79.4°C), OLS-12: 120°F (48.9°C).
Pressure Limit: OLS-11, 12: 200 psig (13.8 bar); OLS-10: 1000 psig (69 bar).
Repeatability: ±0.02″ (0.5 mm).
Switch Type: NPN open collector.
Power Requirements: 10-28 VDC.
Output Signal: Vout (max) = 28 VDC, Isink (max) = 100 mA.
Current Consumption: 35 mA max.
Electrical Connections: 38″ (965.2 mm) 3 conductor cable, 22 AWG wire.
Process Connection: 1/2″ male NPT.
Mounting Orientation: Can be mounted in any position.
Specific Gravity: No min.
Weight: 3 oz (0.085 kg).

MODEL CHART

Model	Wetted Materials
OLS-10	316 SS/polysulfone
OLS-11	Polysulfone
OLS-12	PFA

SERIES B-190

UL LISTED

LIQUID LEVEL SWITCH-CONTROL

Top Mounted Displacer Type, Adjustable Setpoints, Magnetic Operation, Optional Hermetically Sealed Snap Switch

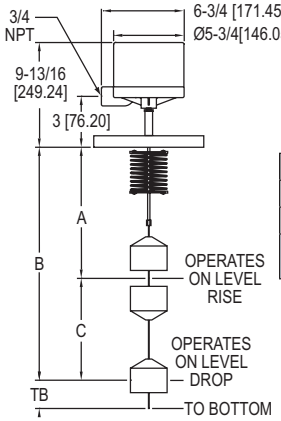

DIMENSIONS FOR 1.0 S.G. @ 100°F (38°C)

A		C		TB	B
Max.	Min.	Max.	Min.	Max.	Min.
116-1/2″ [2.66 m]	6-1/2″ [165 mm]	114″ [2.9 m]	6-3/4″ [172 mm]	2-1/2″ [64 mm]	122-1/4″ [3.1 m]

The **Series B-190 Liquid Level Switch-Control** is a top mount displacer type level control. They work on the principle that submerged solids weigh less in liquids, and as the liquid level rises and their weight decreases, the tension on the spring by which they are suspended is decreased. This Series is offered in a range of cable lengths, specific gravities, circuit types and enclosure ratings.

BENEFITS/FEATURES
- Extremely versatile design
- Displacers are suspended on a coil spring and do not float on the surface of liquids and are unaffected by turbulence or pressure
- Excellent for applications with viscous or dirty liquids

APPLICATIONS
- Pumping stations
- Foaming liquids
- Sanitary/sewage treatment
- Paints and varnishes
- Agitated or turbulent fluids
- Heavy oil refineries
- Chemical plants
- Power generating stations
- Viscous or dirty liquids

MODEL CHART

Model	Switch Type
B190-WT-4810-S-A-1.0-6	SPDT mercury
B190-WT-7810-S-A-1.0-6	SPDT snap
B190-WT-7810HM-S-A-1.0-6	SPDT hermetically sealed snap

SPECIFICATIONS

Service: Compatible liquids.
Wetted Materials: Cable, spring and stops: 316 SS; Optional Inconel® spring; Displacers: Porcelai; Optional 304 SS, 316 SS, or carbon graphite.
Temperature Limits: Ambient temperature: 32 to 200°F (0 to 93°C); Process temperature: 32 to 200°F (0 to 93°C).
Pressure Limit: 125 psig (8.6 bar). Higher ratings available.
Enclosure Rating: NEMA 4X. Optional general purpose or explosion-proof.
Switch Type: SPDT snap switch, hermetically sealed snap switch, or mercury switch. Optional DPDT or two stage.
Electrical Rating: Snap switch: 12 A @ 120 VAC, 5 A @ 240 VAC, 0.5 A @ 125 VDC resistive, 0.25 A @ 250 VDC resistive; Hermetically sealed snap switch: 5 A @ 120 VAC, 5 A @ 240 VAC, 5 A @ 30 VDC resistive; Mercury switch: 4 A @ 120 VAC/DC, 2 A @ 240 VAC/DC. Higher contact ratings available for the mercury switch.
Electrical Connections: Screw terminal.
Conduit Connection: 3/4″ female NPT.
Process Connections: 4″ 125 cast iron flange. Other material, size, and rating flanges are available.
Mounting Orientation: Vertical.
Set Point Adjustment: Adjustable by moving displacers see dimension chart for minimum and maximum values.
Deadband: Adjustable by moving displacers see dimension chart for minimum and maximum values.
Specific Gravity: Standard is 1.0. Specify when ordering by replacing 1.0 in model number with specific gravity setting desired. Settable range is 0.5 to 1.2.
Cable Length: 10′ (3 m) standard. Optional up to 100′ (30.5 m).
Weight: 25 lb (11.34 kg).
Agency Approvals: UL (None on HM switch).

Inconel® is a registered trademark of Huntington Alloys Corporation

Dwyer

SERIES CLS2

CAPACITIVE LEVEL SWITCH

Powder, Bulk, or Liquids, Auto-Calibration

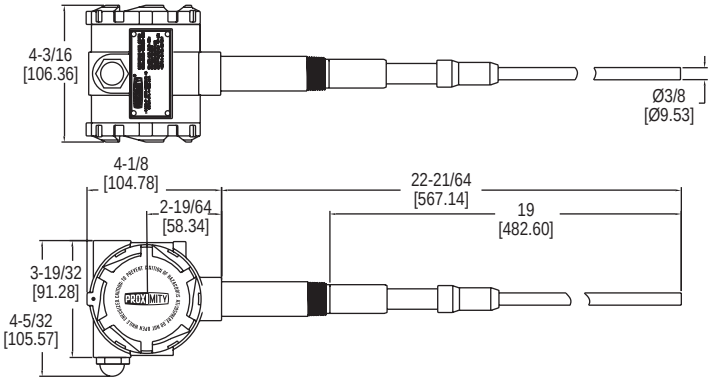

The **Series CLS2 Capacitive Level Switch** is a capacitive technology level switch which can be used for liquids, powders and bulk materials. It is offered with PVDF and 316 SS wetted material, weatherproof enclosure, DPDT output and a variety of process connections.

BENEFITS/FEATURES

- No moving parts permitting for no jams, no wear, nothing to break, and no maintenance
- Impulse RF admittance measurement combined with an active guard, provides excellent level measurement and stability while being insensitive to material buildup
- Immune to external RF sources like walkie-talkies and cell phones as well as minimal interference with radio communication or other electronic systems
- Automatic calibration with no need to turn calibration pots, just push the calibration button and an external magnet to activate the calibration without having to open the enclosure saving time
- Coat guard probe is not affected by sticky, dusty, or clingy materials that coat or build preventing false alarms
- Status indication via an ultra-high brightness external red LED switch status indicator, and internal indicators for power, sensor, and switch status that can be seen externally with window cap option (external LED on weatherproof model only)
- Can be used for liquid interface applications to detect the level of two immiscible liquids that have different dielectric constants such as oil and water
- Failsafe setting with output switches that can be set for NO or NC condition on loss of power
- Time delay prevents false alarms from material splashing, agitation, etc.
- Removable terminal block snaps in and out enabling easy wiring outside of the enclosure
- Universal power supply with one model that works from 12-240 VAC/DC without any jumpers or change of setting
- Wetted materials of PVDF and 316 SS assure great chemical compatibility and meet food grade requirements

APPLICATIONS

- Sewage and wastewater
- Food and beverage
- Pharmaceuticals
- Sumps
- Boilers and steam generators
- Caustics and acids
- Reservoirs

SPECIFICATIONS

Service: Liquids, powder, and bulk materials compatible with wetted materials.
Wetted Materials: 316 SS and polyvinylidene fluoride (PVDF).
Temperature Limits: Ambient: -40 to 185°F (-40 to 85°C), -4 to 185°F (-20 to 85°C) with under 24 VAC/DC power supply; Process: -40 to 250°F (-40 to 121°C).
Pressure Limit: 365 psi (25 bar).
Enclosure Rating: Weatherproof, NEMA 4X (IP66).
Switch Type: DPDT (two form C).
Electrical Rating: 8 A @ 120/240 VAC res., 30 VDC. 1/2 hp @ 120 VAC and 1/4 hp @ 240 VAC ind.
Power Requirements: 12-240 VAC/DC.
Power Consumption: 2.8 watts max.
Electrical Connection: 1/2″ NPT conduit opening, screw termination with removable terminal block.
Process Connection: See model chart.
Mounting Orientation: Vertical or horizontal.
Set Point Adjustment: Trips when product touches probe. Cut or extend probe to length of desired trip point. Can be cut as short as 1″ and can be extended by welding on to probe. (Minimum length will be effected by material being sensed.)
Response Time: 0.2 s.
Time Delay: Adjustable, 0 to 60 s.
Spark/Static Protection: 10 M Ω dissipation resistance with spark gap. Surge current to 100A max.
Sensitivity: 8 selectable settings, 1, 2, 4, 6, 8, 10, 14, 20 pF (at 30 pF nominal free capacitance).
Agency Approvals: cULus.

MODEL CHART

Example	CLS2	-W	1	1	R	K	1	-019	-M20	CLS2-W11RK1-019-M20
Series	CLS2									Capacitive level switch
Enclosure		W								Weatherproof
Switch			1							DPDT rated 8 A @ 12/240 VAC, 30 VDC res.
Power Supply				1						12-240 VAC/DC
Probe Type					R T C					Standard rod: 316 SS, .375″ diameter Threaded rod: 316 SS (can attach 47″ (1.2 m) field extensions.*) Cable: 316 SS with weight
Insulator Material						K				PVDF
Process Connection							1 2 3 4 5 6 8 9			3/4″ male NPT 1″ male NPT 1-1/2″ male NPT 3/4″ BSPT 1″ BSPT 1-1/2″ BSPT 1-1/2″ sanitary clamp 2″ sanitary clamp
Probe Length								XXX		Insertion length in inches. Example 019 is 19″ length. (Minimum length is 6″, with 3/4″ sensing tip)
Options									M20 WC	M20 conduit connection with cable gland Window cap

Example: CLS2-W11RK1-019.

*Extension rods sold separately. Contact factory for part number.

Dwyer

MODEL CLS1

CAPACITANCE LEVEL SWITCH

For Solids, Liquids or Slurries, Fail-Safe Protection, <1 pF Sensitivity

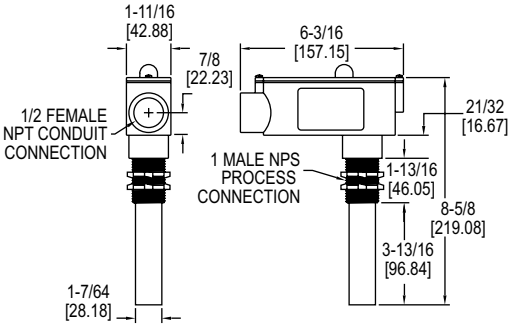

The **Model CLS1 Capacitance Level Switch** provides reliable point level measurement of solids, liquids and slurries in metallic or non-metallic tanks and vessels. It detects the presence or absence of material in contact with the probe by sensing a change in the capacitance.

BENEFITS/FEATURES
- Electronics provide highly sensitive measurement detection (requires less than a 1 picofarad shift from ambient)
- State of the art technology ignores material build-up on the vessel sidewall or along the probe assembly
- One time calibration is simple with a single multi-turn potentiometer
- Red LED on housing indicates sensor status
- Adjustable 1-30 second time delay and a 5 A, SPDT fail-safe relay output
- Added installation flexibility with vertically or horizontally mounting

APPLICATIONS
- High or low level detection
- Bins
- Silos
- Tanks
- Hoppers
- Chutes

SPECIFICATIONS

Service: Solids, liquids, or slurries.
Wetted Material: CPVC.
Temperature Limits: Process: -40 to 240°F (-40 to 116°C); Ambient: -40 to 185°F (-40 to 85°C).
Enclosure Rating: NEMA 4X (IP66), PVC, dust tight, water resistant.
Switch Type: SPDT.
Electrical Rating: 5 A @ 250 VAC.
Power Requirements: 120 VAC, 1.5 VA.
Conduit Connection: 3/4″ female NPT.
Process Connection: 1″ male NPS.
Mounting Orientation: Vertical or horizontal.
Sensitivity: Adjustable to < 1 pF.
Fail-Safe: Switch selectable, high/low.
Time Delay: Adjustable 1 to 30 s.
Weight: 2.0 lb (0.91 kg).

MODEL CHART

Model	Description
CLS1	Capacitance level switch

MODEL VRLS

VIBRATING ROD LEVEL SWITCH

Economical, No Material Build Up, For Powder or Bulk Solids

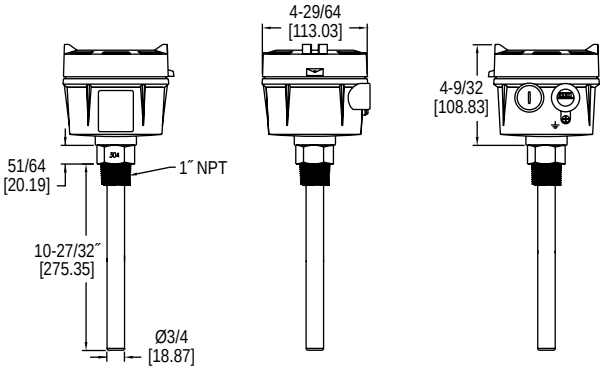

The **Model VRLS Vibrating Rod Level Switch** is economical choice in level detection of powders and bulk solids. The VRLS incorporates a piezoelectric crystal that vibrates the rod at its natural frequency, when contact material is present it dampens the vibrations and the switch changes state.

BENEFITS/FEATURES
- Probe design allows for self-cleaning, ensuring no build-up or bridging of material and accurate detection
- No mechanical moving parts with no routine maintenance required
- Sensitivity is adjustable for detection ranging from large granular material to small powders with low bulk densities.
- The failsafe mode can be set for failure on high level or failure on low level using a selector switch in the enclosure
- Unaffected by the dielectric constant of the sensed material, making it superior to a capacitance level switch for applications where the dielectric constant is too low, where there is more than one material being used in one vessel, and when material moisture content can change
- Ideal for applications where the bulk density is too low for a rotating paddle level switch

APPLICATIONS
- Pulp and paper processing
- Mining
- Food and beverage
- Silos
- Hoppers

SPECIFICATIONS

Service: Dry powder or bulk materials compatible with wetted materials.
Sensitivity: Min. bulk density of 20 lb/ft^3 (320 kg/m^3).
Wetted Materials: 304 SS.
Temperature Limits: Ambient: -40 to 140°F (-40 to 60°C); Process: -40 to 176°F (-40 to 80°C).
Pressure Limit: 150 psi (10 bar).
Power Requirement: 20-250 VAC/VDC, 50/60 Hz.
Power Consumption: 15 VA.
Enclosure: Aluminum, painted.
Enclosure Rating: IP65.
Switch Type: SPDT.
Electrical Rating: 5 A @ 250 VAC.
Electrical Connections: Screw terminals.
Conduit Connection: 1/2″ female NPT x 2.
Process Connection: 1″ male NPT.
Indication Lights: Internal: green and red LED.
Sensing Delay: 0 to 6 s.
Weight: 4.4 lb (2.0 kg).

MODEL CHART

Model	Description
VRLS-01	Vibrating rod level switch

Dwyer

SERIES TFLS

TUNING FORK LEVEL SWITCH

Perfect for Sensing Low Bulk Density or Low Dielectric Materials

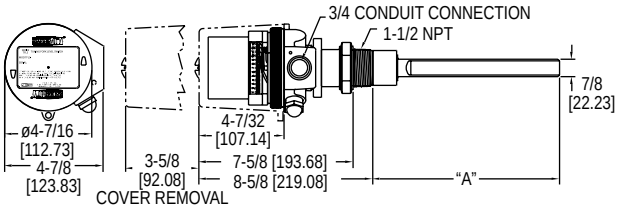

Extension Length	DIM "A"
None	9-1/4 (234.95)
6 in	15-7/8 (403.23)
12 in	21-7/8 (555.63)
18 in	27-7/8 (708.03)
24 in	33-7/8 (860.43)
36 in	45-7/8 (1165.23)
48 in	57-7/8 (1470.03)

The **Series TFLS Tuning Fork Level Switch** is ideal for level control of powders and fine grained solids, especially those with a low bulk density. The TFLS incorporates a piezoelectric crystal that vibrates the fork at its natural frequency, when contact material is present it dampens the vibrations and the switch changes state.

BENEFITS/FEATURES
- Status indication with external LED switch indicator, and internal indicators for normal and alarm status
- No calibration required for quick and easy installation
- No mechanical moving parts with no routine maintenance required
- Unaffected by the dielectric constant of the sensed material, making it superior to a capacitance level switch for applications where the dielectric constant is too low, where there is more than one material being used in one vessel, and when material moisture content can change
- Vibrating fork design is ideal for low bulk density and low dielectric constant products, detecting products down to 1.8 lb/ft³ (30 g/l)
- Ideal for applications where the bulk density is too low for a rotating paddle level switch
- Adjustable sensitivity can be set to ignore lighter bulk density products and only detect heavier products, such as sand, gravel, or polyester chips in water
- Unit is not affected by vibration from conveying systems, motors, or the movement of material
- Mounted in any position and is available with factory built extensions for mounting on the top of the storage vessel
- Failsafe setting with output switch that can be set for NO or NC condition on loss of power
- Time delay prevents false alarms from material surges
- Universal power supply yields one model which works with 90-265 VAC and 24 VDC

APPLICATIONS
- Pulp and paper processing
- Food and beverage
- Lime, styrofoam, tobacco, dry cereals, sugar, animal feed, milk powder, flour, insulation, cement, paper shavings, plastic granules, sawdust, carbon black, light fibers, detergent powders, dyes, chalk, silica, sand, wood chips

SPECIFICATIONS

Service: Dry powder or bulk materials compatible with wetted materials. Can detect bulk materials submerged in liquid.
Sensitivity: Minimum bulk density of 1.8 lb/ft³ (30 g/l), max particle size 0.4´ (10 mm).
Wetted Materials: 316 SS.
Temperature Limits: Ambient: -4 to 140˚F (-20 to 60°C); Process: -4 to 176°F (-20 to 80°C).
Pressure Limit: 145 psig (10 bar).
Power Requirement: 90-265 VAC, 50/60 Hz; 24 VDC.
Power Consumption: 4 VA.
Enclosure: Aluminum, powder coated.
Enclosure Rating: Weatherproof, NEMA 4X (IP66).
Switch Type: SPDT.
Electrical Rating: 5 A @ 230 VAC.
Electric Connections: Screw terminals.
Conduit Connection: 3/4˝ female NPT.
Process Connection: 1-1/2˝ male NPT.
Indication Lights: External: Red LED; Internal: Green and red LED's.
Sensing Delay: (Max) covered probe: 2 s; Uncovered probe: 3 to 7 s.
Time Delay: Separate settings for covering and uncovering the probe. Adjustable from 2 to 20 s.
Weight: 5.5 lb (2.5 kg).

MODEL CHART

Model	Description
TFLS-W11SR1	Tuning fork level switch

Note: Contact factory for fork extension options in stainless steel.

MODEL CTF

MINI TUNING FORK LEVEL SWITCH

Compact, Cost Effective, DIN Connection

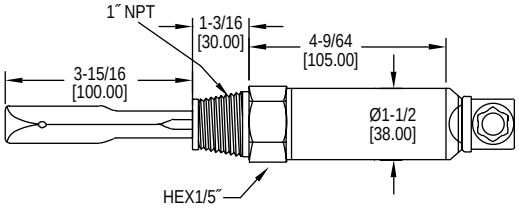

The **Model CTF Mini Tuning Fork Level Switch** is an ideal choice for level control of powders. The CTF incorporates a piezoelectric crystal that vibrates the fork at its natural frequency, when contact material is present it dampens the vibrations and the switch changes state. This series offers a PNP or NPN output.

BENEFITS/FEATURES
- DIN connection and compact size allows for application in places a larger tuning fork level switch may not be suitable, providing great versatility
- No mechanical moving parts with no routine maintenance required
- Unaffected by the dielectric constant of the sensed material, making it superior to a capacitance level switch for applications where the dielectric constant is too low, where there is more than one material being used in one vessel, and when material moisture content can change
- Ideal for applications where the bulk density is too low for a rotating paddle level switch

APPLICATIONS
- Chemical processing
- Pulp and paper processing
- Mining
- Food and beverage

SPECIFICATIONS

Service: Dry powder compatible with wetted materials.
Sensitivity: Min. bulk solid density: 4.4 lb/ft³ (70 g/l).
Wetted Materials: Tuning fork: 316L SS; Process connection: 304 SS.
Temperature Limits: Ambient: -40 to 140°F (-40 to 60°C); Process: -40 to 212°F (-40 to 100°C).
Pressure Limit: 600 psi (40 bar).
Power Requirement: 12-55 VDC.
Power Consumption: 10 mA @ 12-24 VDC; 0.5 W (max.).
Enclosure: Aluminum, painted.
Enclosure Rating: IP65.
Switch Type: 3-wire PNP or NPN output.
Electrical Rating: 350 mA (max) @ 12 to 55 VDC.
Conduit Connection: Valve plug DIN 43650.
Process Connections: 1˝ male NPT.
Indication Lights: External red LED.
Sensing Delay: Max. covered probe: 1 to 3 s.; Uncovered probe: 1 to 3 s.
Weight: 2.2 lb (1.0 kg).
Compliance: CE.

MODEL CHART

Model	Description
CTF-02	Mini tuning fork level switch with NPN output
CTF-03	Mini tuning fork level switch with PNP output

Dwyer

MODEL DBLM

MINI-BIN DRY BULK LEVEL MONITOR

Compact, 4-Vane Paddle

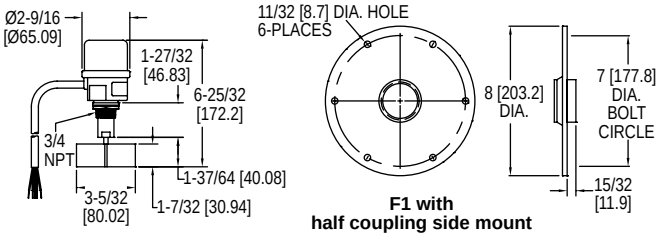

The **Model DBLM Mini-Bin Dry Bulk Level Monitor** provides reliable level sensing for dry bulk solids where mounting space is limited. Model DBLM Mini-Bin operates by using a 1 rpm synchronous motor to rotate a four vane, plastic paddle, and when material surrounds paddle and impedes rotation, the motor is de-energized and triggers a SPDT snap switch. Mount the Mini-Bin with optional 1-1/4″ to 3/4″ reducer to replace standard size units.

BENEFITS/FEATURES
- Compact, side mount control reports high, intermediate, and low level conditions, eliminating overflows, choking, clogs or empty vessels
- Unaffected by the dielectric constant of the sensed material, making it superior to a capacitance level switch for applications where the dielectric constant is too low, where there is more than one material being used in one vessel, and when material moisture content can change

APPLICATIONS
- Mining
- Food and beverage
- Grain silos
- Hoppers

SPECIFICATIONS

Service: Dry bulk solids.
Wetted Materials: Polycarbonate paddle, SS shaft, PTFE washer.
Temperature Limits: -4 to 140°F (-20 to 60°C).
Enclosure Rating: Polycarbonate, NEMA 1 (IP10).
Switch Type: SPDT snap switch.
Electrical Rating: 3 A @ 250 VAC.
Power Requirements: 110 VAC, 50/60 Hz, 220 VAC optional, consult factory.
Power Consumption: 1.5 watt.
Electrical Connections: 18 AWG, 12″ leads wrapped in conduit.
Process Connection: 3/4″ male NPT, optional flange and 1-1/4″ to 3/4″ reducer.
Mounting Orientation: Side mount.
Weight: 0.77 lb (350 g).
Compliance: CE.

MODEL CHART

Model	Power Supply
DBLM3040	110 VAC
DBLM3140	220 VAC

ACCESSORIES

Model	Description
A-335	1-1/4″ to 3/4″ reducer 220

SERIES PLS2

PADDLE LEVEL SWITCH

3 Sensitivity Settings, Top or Side Mounting

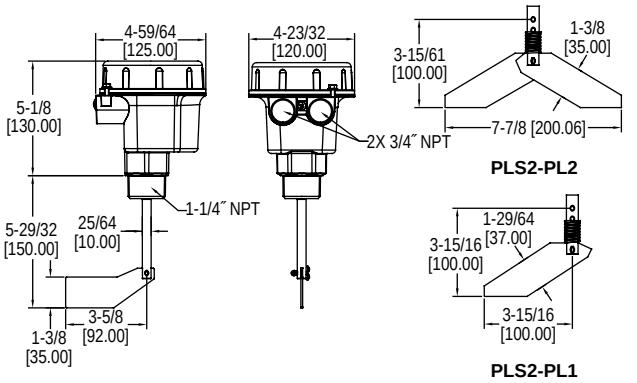

The **Series PLS2 Paddle Level Switch** is an electromechanical level switch designed for level monitoring of bulk materials. The rotating measuring vane is driven by a brushless synchronous motor at one revolution per minute and as product builds up, the paddle rotation is impeded and the resulting motor torque activates the output switch and stops the motor. The PLS2 is designed with the industry standard 1-1/4″ male NPT connection and unit can be side or top mounted.

BENEFITS/FEATURES
- Torque adjusting mechanism eliminates the need for different sized paddles
- 3 sensitivity settings for spring force can be set for light to very sticky materials
- Brushless synchronous motor assures long term reliability and efficiency
- Motor shuts ceases operation when paddle stalls
- Screw cover for easy access with no worries about losing bolts or screws
- Top or side mountable for added installation flexibility
- Unaffected by the dielectric constant of the sensed material, making it superior to a capacitance level switch for applications where the dielectric constant is too low, where there is more than one material being used in one vessel, and when material moisture content can change

APPLICATIONS
- Mining
- Food and beverage
- Silos
- Hoppers

SPECIFICATIONS

Service: Dry powder or bulk materials compatible with wetted materials.
Wetted Materials: Paddle: 304 SS; Exposed shaft: 303 SS; Shaft seal: NBR; Process connection: Aluminum.
Temperature Limits: Process: -13 to 176°F (-25 to 80°C); Ambient: -4 to 140°F (-20 to 60°C).
Pressure Limit: 11.6 psi (0.8 bar).
Power Requirement: Select by model number: 115 VAC, 230 VAC or 24 VDC.
Power Consumption: AC versions: 4 VA; DC version: 2.5 watt.
Enclosure: Aluminum, powder coated.
Enclosure Rating: NEMA 4 (IP66); Rated for Class II & III, Div. 1, Group E, F, G.
Switch Type: SPDT micro switch.
Electrical Rating: 5 A @ 250 VAC, 3 A @ 30 VDC.
Electric Connections: Screw terminals.
Conduit Connection: 3/4″ female NPT.
Process Connection: 1-1/4″ male NPT.
Mounting Orientation: Side or top mounting.
Sensitivity: Min. material density of 6 lb/ft³ (96 kg/m³).
Permitted Mechanical Loading: Standard shaft: 67 lbf (300 N) max; Optional extension: 22 lbf (100 N) max.
Weight: 2.6 lb (1.2 kg).
Compliance: CE, FM.

MODEL CHART

Model	Description
PLS2-E-1-1	Explosion-proof paddle level switch, 115 VAC power supply
PLS2-E-1-2	Explosion-proof paddle level switch, 230 VAC power supply
PLS2-E-1-3	Explosion-proof paddle level switch, 24 VDC power supply

Note: Models include single sided non-spring paddle.

ACCESSORIES

Model	Description
PLS2-EX1	8.5″ shaft extension
PLS2-EX2	19.6″ shaft extension
PLS2-EX3	39.4″ shaft extension
PLS2-EX4	78.7″ shaft extension
PLS2-PL1	Single sided spring paddle
PLS2-PL2	Double sided spring paddle

Dwyer
SERIES PLS

PADDLE LEVEL SWITCH

Weatherproof and Explosion Proof Option, Rotary Paddle Level Control, Top or Side Mounting for Dry Bulk Materials

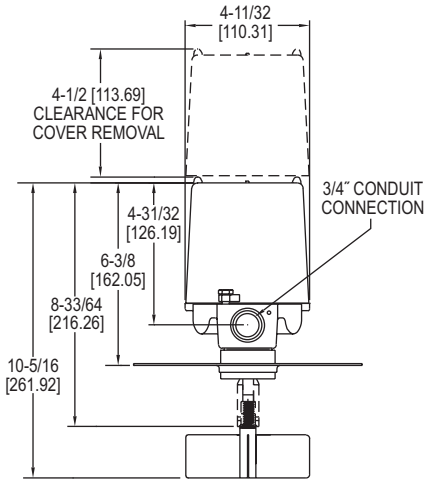

Isolated magnetic drive

PDL-1
Minimum bulk density of 5 lb/ft³ (80 kg/m³).

PDL-2
Minimum bulk density of 30 lb/ft³ (481 kg/m³).

PDL-3
Minimum bulk density of 30 lb/ft³ (481 kg/m³). Fits through a 1-1/4″ coupling eliminating the need for a mounting flange.

PDL-4
Minimum bulk density of 70 lb/ft³ (1122 kg/m³). Fits through 1-1/4″ coupling eliminating the need for a mounting flange.

The **Series PLS Paddle Level Switch** uses a 1 RPM synchronous motor to rotate a paddle and sense the presence of dry powder or bulk materials. Movement is impeded when product comes into contact with the paddle and the resulting motor torque activates the output switches and stops the motor. The PLS is designed with the industry standard 1-1/4″ male NPT connection and mounting flanges.

BENEFITS/FEATURES

- Magnetic drive isolates and completely seals the control head from the process and environment preventing material or dust from entering the control head
- Motor shuts-off when paddle stalls increasing motor life, preventing motor burnout, and decreasing power usage
- Slip clutch design enabled by the magnetic drive that prevents damage to motor and drive mechanism from sudden or excessive loading on the paddle
- Status indication light on weatherproof models
- Screw cover on the enclosure for easy access with no worries about losing bolts or screws
- Modular design to allow field installation of any paddle, flanges, shaft extensions, or shaft guards
- Flexible coupling available for protection of the paddle and drive from side loads, surges or impacts. Recommended for top mount applications with shaft extension and applications with large or heavy materials

APPLICATIONS

- Mining
- Food and beverage
- Silos
- Hoppers

SPECIFICATIONS

Service: Dry powder or bulk materials compatible with wetted materials.
Sensitivity: Min material density of 5 lb/ft³ (80 kg/m³), max of 200 lb/ft³ (3200 kg/m³).
Wetted Materials: Paddles: 316 SS; Exposed shaft: 316 SS; Shaft seal: PTFE; Mounting boss: Aluminum; Flexible coupling: 316 SS; Mounting flanges: Carbon steel or 316 SS; Shaft extension and shaft guards: Galvanized steel or 316 SS.
Temperature Limits: Standard construction: Process: -40 to 300°F (-40 to 148.9°C); Ambient: -40 to 185°F (-40 to 85°C); High temperature option: Process: -40 to 500°F (-40 to 260°C); Ambient: -40 to 185°F (-40 to 85°C).
Pressure Limit: 30 psig (2.07 bar) max for .5 micron or larger material.
Power Requirement: Select by part number: 110-120 VAC, 230 VAC, 24 VAC, 48 VAC or 12 VDC.
Power Consumption: Weatherproof models: 5 watts; Explosion-proof models: 3 watts.
Enclosure: Aluminum, powder coated.
Enclosure Rating: Weatherproof (W, WH construction): NEMA 4X (IP66); Explosion-proof (E, EH construction): NEMA 4X (IP66) and rated for Class I, Div. 1 and 2, Groups C and D, Div. 1 and 2, Groups E, F, and G.
Switch Type: SPDT or optional DPDT snap switch.
Electrical Rating: 15 A @ 120.
Electric Connections: Screw terminals.
Conduit Connection: 3/4″ female NPT.
Process Connection: 1-1/4″ male NPT. Optional flange.
Indication Light: Red LED that activates when switch is made or when switch is not made with RL option (Not available on explosion-proof models).
Options: Time delay relay, high temperature construction, top mount, shaft extensions, shaft shields, flexible couplings, other power voltages, reversed light.
Weight: Control head only: 4 lb (1.81 kg).
Agency Approvals: cUL approved as an auxiliary device or as an auxiliary device for hazardous locations.

MODEL CHART

Paddle Model	Flange Model	Description
PDL-1	**FLG-CSH**	Carbon steel with half coupling
PDL-2	**FLG-CSF**	Carbon steel with full coupling
PDL-3	**FLG-SSH**	316 SS with half coupling
PDL-4	**FLG-SSF**	316 SS with full coupling

Note: Contact the factory for shaft extensions, protective shields, and other options. More detailed information available in our Measurement & Control for Powder, Dust, and Bulk Materials Catalog.

MODEL CHART - CONTROL ASSEMBLIES

Model	Description
PLS-W-S-1-0-0-0-0	Weatherproof construction, SPDT switch, 120 VAC power supply. Order paddles and flanges separately.
PLS-W-S-1-3-0-0-0	Weatherproof construction, SPDT switch, 120 VAC power supply, includes PDL-3 paddle.
PLS-W-S-1-2-CSH-0-0	Weatherproof construction, SPDT switch, 120 VAC power supply, includes PDL-2 paddle and FLG-CSH flange.

Note: 316 SS mounting boss available.

Dwyer

SERIES E, G, & P

ULTRA-MAG™ EXPLOSION-PROOF LEVEL SWITCHES

For Powder and Bulk Solids

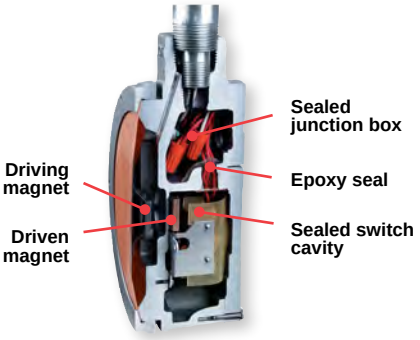

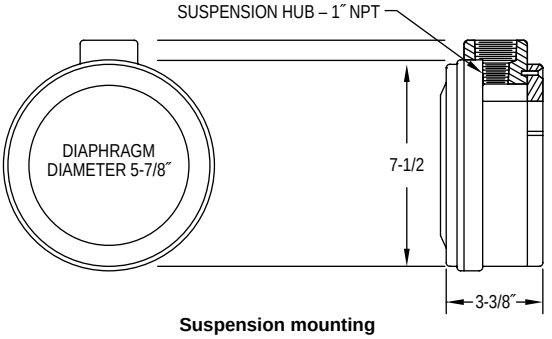

Suspension mounting

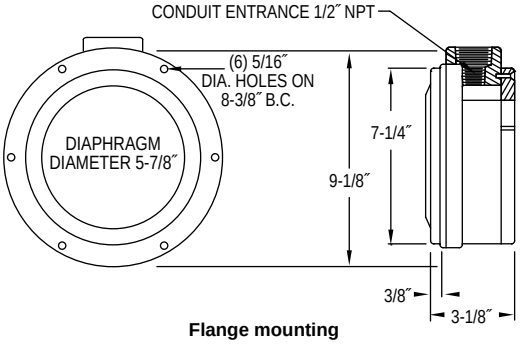

Flange mounting

The **Series E, G, & P Ultra-Mag™ Explosion-Proof Level Switches For Powder and Bulk Solids** are explosion-proof series of level switches for powder and bulk solids that utilize a unique magnetic linkage and diaphragm design to sense the presence of powder and bulk solids in a variety of bins, vessels, and hoppers.

BENEFITS/FEATURES

- Uses a unique magnetic linkage which isolates the electrical compartment from controlled product, reducing maintenance and improving sensitivity
- Sealed switch compartment and sealed leads yield the exceptionally reliable operation
- A wide selection of diaphragms and switches is available with choices of flange or suspension mounting to fit a specific application
- Extremely sensitive indication and very economical
- Magnetic linkage makes this simple explosion-proof diaphragm switch the most rugged and reliable level control for a variety of products

APPLICATIONS

- Mining
- Food and beverage
- Silos
- Hoppers

MOUNTING SELECTION

A choice of either suspension or flange mounting is available to match your application. Flange mounting is the best choice for control of low or intermediate level in vessels containing granular product that does not “bridge”, “rathole”, or otherwise build up on vessel walls. Choose suspension mounting for high level in vessels and for better operation with “bridging” product.❶

Note: The mounting configuration is represented by the letter “S” for suspension or “F” for flange which is the second digit in the part number.❷

DIAPHRAGM SELECTION

A wide variety of diaphragms are available to match product bulk density, flowability, abrasiveness and temperature requirements while providing maximum sensitivity. The best choice for vessels subject to pressure or vacuum is “breathable” fabric (P Series), requiring no venting. Non-porous elastomer (G Series) type diaphragms are the best choice for more abrasive product and broader temperature range applications. Venting is always required with the G series and if used in pressurized vessels, venting to the tank atmosphere is required to allow pressure equalization. A slide rule “Diaphragm Selector” is available from the factory to help you choose the diaphragm best suited to your application.

SPECIFICATIONS

Service: Compatible powder or bulk solids.
Wetted Materials: Mounting flange: See model chart. Aluminum or 304 SS; Diaphragm: See model chart. Urethane, Buna-N, PTFE, silicone rubber, polyester, fluoroelastomers, white Buna-N (food grade), or EPDM.
Temperature Limits: Depends on diaphragm material, see model chart. Standard switch: -40 to 185°F (-40 to 85°C); High temperature switch: -40 to 350°F (-40 to 176°C).
Pressure Limit: 60 psig (4.14 bar).
Enclosure Rating: General purpose or weatherproof and explosion-proof. See model chart.
Switch Type: See model chart.
Electrical Rating: See model chart.
Electrical Connections: 18 gage solid core, 600 V TEW 105°C, style 1015. Epoxy sealed at conduit entrance. 12″ (304.8 mm) long.
Conduit Connection: 1/2″ female NPT.
Process Connection: For flanged models standard is 8-3/8″ (212.725 mm) diameter bolt hole circle.
Mounting Orientation: Flange mount or suspend depending on model.
Set Point Adjustment: Internal screw.
Options: Suspension kits and flange adaptor rings.
Weight: 7 lb (3.18 kg).
Compliance: UL.

❶Suspension and Flange Mounting Kits: See page 327 (Ultra Mag™)
❷Part Number: See page 327 (Ultra Mag™)

ULTRA-MAG™ EXPLOSION-PROOF LEVEL SWITCHES

For Powder and Bulk Solids

DIAPHRAGM SELECTION GUIDE			
Product	**Suggested Diaphragm***	**Product**	**Suggested Diaphragm***
Abrasive	3D	Polypropylene powder	7A
Aggregate	3D	Polypropylene resin	17
Alumina	3D	Polystyrene beads	3D
Ash, dry	3D	Pot ash	3D
Baking powder	7B	Powdered metal	3D
Baking soda	7B	Powdered ore	3D
Barite	3D	PVC powder	7A
Bark, ground	6G	PVC resin	17
Barley, ground or meal	17	Rice	17
Barley, whole	4B	Rye	3D
Beans, edible	4B	Salt	3D
Bentonite	3D	Sand, dry	3D
Bond, foundry	17	Sand, dry silica	3D
Carbon black	7A	Sand, Foundry prepared	5A
Cement, klinker	8A	Sand, shake out	3D
Cement, portland	4B	Sawdust, dry	6G
Chips, hogged fuel	6G	Sea coal	3D
Coal	3D	Sesame seed	3D
Compost	5A	Shale, crushed	3D
Core sand, foundry	3D	Silica, flour	3D
Corn, shelled	8A	Sludge, sewage dried	1A
Diatomaceous earth	7A	Sludge, sewage, ground	1A
Drill mud	3D	Soda ash	3D
Flour	7B	Soybeans, cracked	3D
Fly ash	3D	Soybean, flake	7A
Glass batch	3D	Soybean, flour	7A
Gravel	3D	Soybean meal	3D
Iron ore, crushed	3D	Soybean, whole	3D
Kaolin clay	3D	Sugar beets, whole	6H
Lime, hydrated	5A	Sugar refined	7B
Lime, stone	3D	Sunflower seed	7A
Oats	4B	Taconite pellets	3D
Peanuts in shell	7A	Talcum powder	3D
Peanuts, shelled	3D	Walnut shells, crushed	3D
Perlite	7A	Wheat	8A
Phosphate, rock	3D	Wheat, wet	5A
Polyethylene powder	7A	Wood, chips	6G
Polyethylene resin	17	Wood, dust	6G
Polypropylene fluff	7A		

*Diaphragm codes become 4th and 5th characters in model number.

SUSPENSION MOUNTING

Suspension mounting is normally used for high level monitoring in vessels. For product over 20 lb/ft³, the level switch (diaphragm face) should be located about 1/3 of the distance from the vessel wall to the point of entry of the product. For product less than 20 lb/ft³, the unit should be located closer to the point of entry of the product, about 1/2 the distance from the vessel wall to the point of entry. Pressure required to depress the diaphragm and trip the switch is in the range of 5 to 15 oz in the horizontal direction (perpendicular to the diaphragm). Suspension mounting provides the easiest vertical adjustment capability, greatest sensitivity and best maintenance conditions.

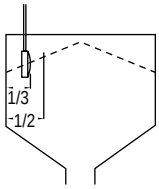

SUSPENSION ASSEMBLY KITS

Pre-assembled kits are available from the factory, or you can build your own kits using standard pipe fittings shown in our Proximity Bill of Materials (Form No. 101). Pipes and fittings are normally galvanized steel, but aluminum and SS pipes and fittings are available. Units are secured to a steel cover plate that rests on a rectangular steel flange welded into the top of the vessel. Aluminum and stainless coverplates and flanges are also available. Standard 48″ L x 1″ pipe provides working depth (WD) up to 48″. Longer pipe (to provide greater WD) is available. GS Series switches have upper (L1 = 28″ standard) and lower (L2 = 20″ standard) 1″ pipes, with a tee (for stilling pot) in between. A stilling pot is required to equalize pressure and keep dirt from building up behind the diaphragm. PS series require a 1/2″ conduit in 1″ suspension pipe for explosion-proof applications. The 1/2″ conduit (56″ standard length) is a standard part of the GS series assembly.

MODEL CHART - ALUMINUM FLANGE ADAPTOR RINGS			
Model	**Tank Outside Diameter**	**Model**	**Tank Outside Diameter**
126-009	15″	**126-016**	84″
126-010	30″	**126-017**	96″
126-011	36″	**126-018**	10′
126-012	42″	**126-019**	12′
126-013	48″	**126-021**	24′
126-014	60″		
126-015	72″		

MODEL CHART - "P" AND "G" SERIES SUSPENSION ASSEMBLY KITS	
Model	**Description**
901-409	″P Series suspension assembly includes 1/2″ pipe (56″ std length), 1″ pipe (48″ std length), 1″ pipe coupling, 1-1/2 NPT strain relief on 1″ pipe. Galvanized mild steel pipe, explosion proof, standard.
901-412	″G″ Series suspension assembly includes 1/2″ pipe (56″ std length), watertight strain relief and 1″ coupling, upper 1″ pipe (28″ std length), lower 1″ pipe (20″ std length), strain relief with 1-1/2″ NPT, 1″x1″x1″ Tee, 1″ street ell and 1″ pipe-4″ long stilling pot. Galvanized steel pipe, explosion proof, standard.
Note: Specials include aluminum or stainless steel assemblies. Flange port and cover assemblies are sold separately. Consult factory for details.	

MODEL CHART									
Example	**E**	**-EX**	**-G**	**-S**	**-D**	**-3D**	**-A**		**EX-G-S-D-3D-A***
Certification 1	E								Ultra-Mag™ explosion-proof level switches
Certification 2		EX							Explosion-proof (UL) Class I, Div I and II, Groups C and D; Class II, Div I and II, Groups E, F, and G General purpose (no code)
Basic Magnetic Pressure Sensing Series			G P						Elastomeric diaphragm-venting required*. (Diaphragms 1A - 8A) Breathable fabric diaphragm-no venting required. (Diaphragms 16 and 17 only)
Mounting (Top = Suspension/ Side = Flanged)				S F T					Suspended (G series require suspension vent fittings)* Subtract 10 lbs./cu. ft.-greater sensitivity Flanged, aluminum standard Flanged, 304 SS
Housing Material					D A E				Aluminum Aluminum, anodized Aluminum, epoxy coated
Diaphragm Material (Temperature) (Bulk Density)						3D 3E 4B 5A 6D 6E 6G 7A 7B 8A 16 17			Urethane, .031″ thick, (10 to 150°F), (> 30 lb/ft³) Urethane, orange, .062″ thick, (10 to 150°F), (> 90 lb/ft³) Buna-N, black, .020″ thick, (-20 to 212°F), (20 to 90 lb/ft³) PTFE/glass on silicone rubber, .024″ thick, (-40 to 350°F), (> 35 lb/ft³) Silicone rubber, gray, .062″ thick, (-40 to 350°F), (15 to 30 lb/ft³) Silicone rubber on glass, red, .032″ thick, (-40 to 350°F), (> 90 lb/ft³) ″6C″ w/urethane overlay, (-40 to 350°F), (wood chips diaphragm with ″A2″) Silicone rubber on glass (White), .015″ thick, (-40 to 350°F), (5 to 40 lb/ft³) Buna-N (food applications-white), .060″ thick, (-20 to 212°F), (30 to 90 lb/ft³) EPDM, black, .036″ thick, (-40 to 275°F), (40 to 90 lb/ft³) Polyester filter fabric, white, 150 micron permeability, (-30 to 275°F), (30 to 90 lb/ft³) Polyester nitex, white, 15 micron permeability (-30 to 275°F), (30 to 90 lb/ft³)
Switch Type							A T V G		Standard, SPDT, 15 A @ 125, 250 VAC High temp, SPDT, 5 A @ 125, 250 VAC; 24 VDC** High vibration, SPDT, 15 A @ 125, 250 VAC Gold contacts, SPDT, 1 A @ 125 VAC, 1/2 A @ 24 VDC
Special Controls								A2 A3	Wood chip control (with ″6G″ diaphragm only) High sensitivity actuator (for very light product)
*GS - G series suspended controls require suspension vent fittings. **Not UL listed.									
Note: The ″EX″ prefix must he added to the 6-digit model number for ″explosion-proof standard″. General purpose units do not require the ″EX″ or other prefix.									

Dwyer

SERIES SBLT2 & SBLTX

SUBMERSIBLE LEVEL TRANSMITTERS

Perfect for Ground Water and Wells, Lightning Protected, Standard 72 Hour Lead Time

SBLT2

SBLTX
(ATEX option available)

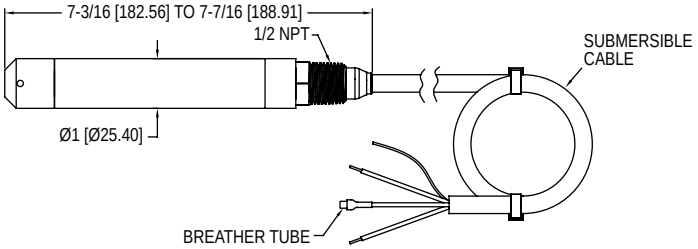

The **Series SBLT2 & SBLTX Submersible Level Transmitters** are manufactured for years of trouble free service. These series measure the height of liquid above the position in the tank referenced to atmospheric pressure. The transmitter consists of a piezoresistive sensing element, encased in a 316 SS housing.

BENEFITS/FEATURES

- Meets application requirements with slim design with bullet nose design which protects the diaphragm from damage
- Increased life with lightning and surge protection utilizing dual arrestor technology, grounded to case, eliminating both power supply surges and lightning ground strike transients (surge protection is not guaranteed and is not covered by warranty) on SBLT2 models
- Eliminates particulate or water droplets from entering the transducer using maintenance-free filter
- Peace of mind with UL approved intrinsically safe on SBLTX models for use in hazardous locations when used with proper barrier
- Decrease ownership cost with durable, 270 lb tensile strength shielded and vented cable and excellent chemical compatibility
- Flexible installation options with NPT connection to rigidly install in a pipe/conduit or duse a A-625 hanging loop to attach a chain to remove from the installation
- Minimal downtime with standard 72 hour lead time

APPLICATIONS

- Well monitoring
- Ground water monitoring
- Environmental remediation
- Surface water monitoring
- Down hole
- Water tanks

SPECIFICATIONS

Service: Compatible liquids.
Wetted Materials: Body: 316 SS, 316 L SS; Bullet nose: PVC; Cable: Polyether polyurethane or ETFE; Seals: Fluoroelastomer.
Accuracy: ±0.25% FS.
Temperature Limit: SBLT2: Polyurethane: 0 to 150°F (-18 to 66°C); ETFE: 0 to 200°F (-18 to 93°C); SBLTX -4 to 176°F (-20 to 80°C); Polyurethane: -4 to 149°F (-20 to 65°C).
Compensated Temperature Range: SBLT2: 0 to 140°F (-18 to 60°C); SBLTX: 0 to 176°F (-18 to 80°C).
Thermal Effect: ±0.02% FS/°F.
Pressure Limit: 2X FS.
Power Requirement: SBLT2: 10-30 VDC (≤ 1000 ft (305 m) of cable); SBLTX: 10-28 VDC.
Output Signal: 4-20 mA DC, 2-wire.
Response Time: 50 ms.
Max. Loop Resistance: 900 Ω at 30 VDC.
Electrical Connections: Wire pigtail.
Mounting Orientation: Suspended in tank below level being measured.
Electrical Protection: SBLT2: Lightning and surge protection; SBLTX: None.
Weight: 2.2 lb (1.0 kg).
Compliance: SBLT2: CE, UKCA; SBLTX: CE, UKCA, cULus intrinsically safe for Class I, Div. 1, Groups A, B, C, D; Class II, Div. 1, Groups E, F, G; Class III Div. 1; ATEX: II 1 G Ex ia IIC T4 Ga and II 1 D Ex ia IIIC T135C Da (according to control drawing 001833-43)**.

**Up to 275´ (83.8 m) for ETFE cable; Up to 470´ (143.3 m) for polyurethane cable.

MODEL CHART

Model	Range psi* (ft w.c.) [m w.c.]	Cable Length ft (m)	Cable Type
SBLT2-5-40-ETFE	5 (11.54) [3.52]	40 (12.2)	ETFE
SBLT2-10-40-ETFE	10 (23.09) [7.04]	40 (12.2)	ETFE
SBLT2-15-60-ETFE	15 (34.63) [10.56]	60 (18.3)	ETFE
SBLT2-20-60-ETFE	20 (46.18) [14.08]	60 (18.3)	ETFE
SBLT2-5-40	5 (11.54) [3.52]	40 (12.2)	Polyurethane
SBLT2-10-40	10 (23.09) [7.04]	40 (12.2)	Polyurethane
SBLT2-15-60	15 (34.63) [10.56]	60 (18.3)	Polyurethane
SBLT2-20-60	20 (46.18) [14.08]	60 (18.3)	Polyurethane
SBLT2-3.5M-5M	4.97 (11.48) [3.5]	16.40 (5)	Polyurethane
SBLT2-5M-10M	14.21 (32.81) [5]	32.81 (10)	Polyurethane
SBLT2-10M-18M	25.58 (59.06) [10]	59.06 (18)	Polyurethane

*Configured ranges below 5 psi (11.54´ w.c.) (3.52 m w.c.) ±1% FS accuracy.

Note: For intrinsically safe approval, change model number from SBLT2 to SBLTX. For custom ranges or cable lengths, contact factory.

OPTIONS

Model	Description
-ATEX	ATEX intrinsically safe
-P1	1/4″ NPT male
-P2	1/4″ NPT female
-P3	1/4″ BSPT male ISO 228 R
-P4	1/4″ BSPT female ISO 228 RC
-P11	3/4″ clean-out type

-P11 option

ACCESSORIES

Model	Description
A-297	Dessicant filter for vent tube. Removes humidity for protection of the sensor. Changes color to show saturation
A-625	316 SS cable hanger use with NPT option for attaching chain for easy pulling out of application
MTL5541	Galvanic barrier
MTL7706	Intrinsically safe zener barrier

A-297

A-625

MINIATURE SUBMERSIBLE LEVEL TRANSMITTER

Only 0.63˝ (16 mm) in Diameter, Perfect for Wells and Boreholes, Low Power Models for Telemetry Systems

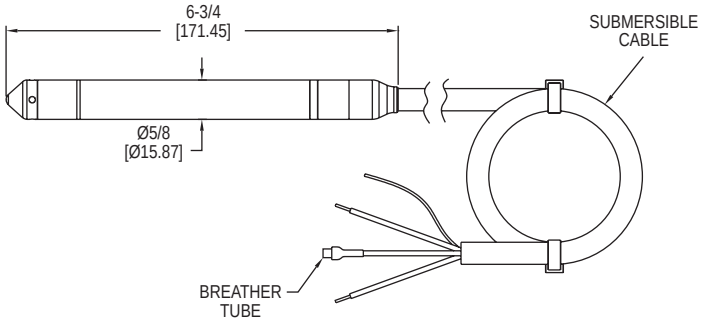

The **Series MBLT Miniature Submersible Level Transmitter** measures the height of liquid above the position in the tank referenced to atmospheric pressure. The transmitter consists of a piezoresistive sensing element, encased in a 0.63˝ (16 mm) diameter 316 SS housing.

BENEFITS/FEATURES

- Fits narrow installation openings with slender 0.63˝ (16 mm) diameter design
- Constructed for years of trouble free service with welded 316 SS body and 316 SS nose cap
- Prevents damage or snares when removing the unit from the installation with tapered 316 SS body top
- More precise than BFSL or BSL rated output with ±0.10% or ±0.25% FS accuracy output
- Eliminates particulate or water droplets from entering the transducer using maintenance-free filter
- Excellent chemical compatibility with choice of polyether polyurethane or ETFE cable materials
- Eliminate both power supply surges and lightning ground strike transients with incorporated lightning and surge protection, (surge protection is not guaranteed and is not covered by warranty)

APPLICATIONS

- Ballast tanks
- Ground water monitoring
- Surface water monitoring
- Dewatering
- Down hole
- Remote telemetry
- Remote flood monitoring
- Narrow conduit or pipe installations
- Remediation and environmental monitoring

SPECIFICATIONS

Service: Compatible liquids.
Wetted Materials: Body and nose: 316 SS; Cable: Polyether polyurethane or ETFE; Seals: Fluoroelastomer; Label: Polyolefin.
Accuracy: ±0.25% or ±0.10% FS**.
Temperature Limits: -4 to 176°F (-20 to 80°C).
Compensated Temperature Limits: 0.25%: (0 to 70°C); 0.10%: (0 to 60°C).
Thermal Effect: 0.25%: ±0.45% FS TEB; 0.10%: ±0.30% FS TEB.
Pressure Limit: 2x FS.
Power Requirements: Current output: 10-33 VDC; Voltage output: 8-33 VDC; 5 mA max (no load).
Output Signal: 4-20 mA DC 2-wire or 0-5 V* (model depending).
Response Time: < 50 ms.
Max Loop Resistance: 1000 Ω @ 30 VDC (current output).
Voltage Output Impedence: 10 Ω + 4.4 Ω / 100´ cable (voltage output).
Electrical Connections: Wire pigtail.
Mounting Connection: Suspended below point being monitored.
Electrical Protection: Surge/lightning protected per EN61000-4-5, Class 5.
Weight: Body: 0.235 lb (0.107 kg); Cable: 0.037 lb (0.017 kg) per foot.
Agency Approvals: CE.

*Consult factory for additional outputs.
**4.3 to 4.9 psi (10 to 11.54 in w.c.) configured ranges ±0.30% FS accuracy.

MODEL CHART

4-20 mA output Model ±0.10%	4-20 mA output Model ±0.25%**	0-5 V output Model ±0.25%**	Range psi (´ w.c.) [m w.c.]	Cable Length	Cable Type
-	MBLT-2SC-IVPP-5-40	MBLT-2SC-VVPP-5-40	5 (11.54) [3.52]	40´	Polyether polyurethane
-	MBLT-2SC-IVPF-15-40	MBLT-2SC-VVPF-15-40	6.50 (15) [4.57]	40´	Polyether polyurethane
-	MBLT-2SC-IVPM-5-12.2	MBLT-2SC-VVPM-5-12.2	7.10 (16.40) [5]	12.2 m	Polyether polyurethane
-	MBLT-2SC-IVPM-10-30**	MBLT-2SC-VVPM-10-30**	14.22 (32.84) [10]	9.14 m	Polyether polyurethane
MBLT-2SB-IVPF-20-40	MBLT-2SC-IVPF-20-40	MBLT-2SC-VVPF-20-40	8.66 (20) [6.10]	40´	Polyether polyurethane
MBLT-2SB-IVPF-30-50	MBLT-2SC-IVPF-30-50	MBLT-2SC-VVPF-30-50	12.99 (30) [9.14]	50´	Polyether polyurethane
MBLT-2SB-IVPM-10-15.2	MBLT-2SC-IVPM-10-15.2	MBLT-2SC-VVPM-10-15.2	14.21 (32.81) [10]	15.2 m	Polyether polyurethane
MBLT-2SB-IVPF-50-70	MBLT-2SC-IVPF-50-70	MBLT-2SC-VVPF-50-70	21.65 (50) [15.24]	70´	Polyether polyurethane
MBLT-2SB-IVPM-20-26	MBLT-2SC-IVPM-20-26	MBLT-2SC-VVPM-20-26	28.42 (65.62) [20]	26 m	Polyether polyurethane
MBLT-2SB-IVPM-30-36	MBLT-2SC-IVPM-30-36	MBLT-2SC-VVPM-30-36	42.63 (98.43) [30]	36 m	Polyether polyurethane
MBLT-2SB-IVPF-100-120	MBLT-2SC-IVPF-100-120	MBLT-2SC-VVPF-100-120	43.31 (100) [30.48]	120´	Polyether polyurethane
MBLT-2SB-IVPM-40-46	MBLT-2SC-IVPM-40-46	MBLT-2SC-VVPM-40-46	56.83 (131.23) [40]	46 m	Polyether polyurethane
MBLT-2SB-IVPF-150-170	MBLT-2SC-IVPF-150-170	MBLT-2SC-VVPF-150-170	64.96 (150) [45.72]	170´	Polyether polyurethane
MBLT-2SB-IVPM-60-66	MBLT-2SC-IVPM-60-66	MBLT-2SC-VVPM-60-66	85.25 (196.85) [60]	66 m	Polyether polyurethane
MBLT-2SB-IVPF-200-220	MBLT-2SC-IVPF-200-220	MBLT-2SC-VVPF-200-220	86.62 (200) [60.96]	220´	Polyether polyurethane
MBLT-2SB-IVPF-350-370	MBLT-2SC-IVPF-350-370	MBLT-2SC-VVPF-350-370	151.58 (350) [106.68]	370´	Polyether polyurethane
MBLT-2SB-IVPM-100-106	MBLT-2SC-IVPM-100-106	MBLT-2SC-VVPM-100-106	142.09 (328.08) [100]	106 m	Polyether polyurethane
MBLT-2SB-IVPM-200-206	MBLT-2SC-IVPM-200-206	MBLT-2SC-VVPM-200-206	284.18 (656.17) [200]	206 m	Polyether polyurethane
MBLT-2SB-IVPF-690-710	MBLT-2SC-IVPF-690-710	MBLT-2SC-VVPF-690-710	298.83 (690) [210.31]	710´	Polyether polyurethane

**4.3 to 4.9 psi (10 to 11.54 in w.c.) configured ranges ±0.30% FS accuracy.

OPTIONS

For custom ranges, cable lengths, or ETFE cable, contact the website.

ACCESSORIES

Model	Description
A-297	Dessicant filter for vent tube. Removes humidity for protection of the sensor. Changes color to show saturation

A-297

Dwyer

SERIES PBLT2 & PBLTX

SUBMERSIBLE LEVEL TRANSMITTERS

Perfect for Sludge and Slurries, Lightning Protected, Standard 72 Hour Lead Time

PBLT2

PBLTX
(ATEX option available)

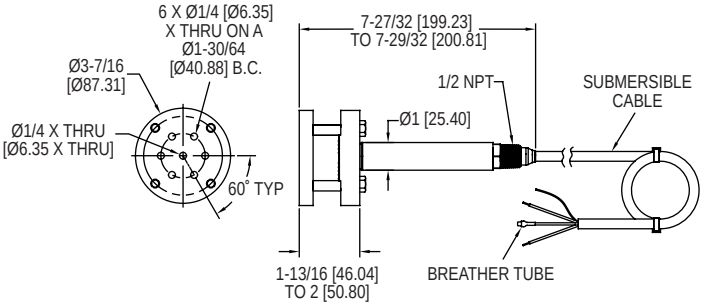

The **Series PBLT2 & PBLTX Submersible Level Transmitters** are manufactured for years of trouble free service in the harshest applications. These Series measure the height of liquid above the position in the tank referenced to atmospheric pressure. The transmitter consists of a piezoresistive sensing element, encased in a 316 SS housing with cage and large diameter 316 SS diaphragm seal.

BENEFITS/FEATURES

- Meet application requirements with durable cage design with large diameter 316 SS diaphragm seal that is non-clogging and damage resistant to floating solids
- Increased life with lightning and surge protection utilizing dual arrestor technology, grounded to case, eliminating both power supply surges and lightning ground strike transients (surge protection is not guaranteed and is not covered by warranty) on PBLT2 models
- Eliminates particulate or water droplets from entering the transducer using maintenance-free filter
- Peace of mind with UL approved intrinsically safe on PBLTX models for use in hazardous locations when used with proper barrier
- Decrease ownership cost with durable, 270 lb tensile strength shielded and vented cable and excellent chemical compatibility
- Flexible installation options with NPT connection to rigidly install in a pipe/conduit or use a A-625 hanging loop to attach a chain to remove from the installation
- Minimal downtime with standard 72 hour lead time

APPLICATIONS

- Wastewater
- Sludge pits, clarifiers, digesters
- Alum tanks
- Chemical storage tanks
- Oil tanks
- Lime slurry
- Sumps
- Reservoirs

SPECIFICATIONS

Service: Compatible liquids.
Wetted Materials: Body: 316 SS, 316L SS; Cable: Polyether polyurethane or ETFE; Seals: Fluoroelastomer.
Accuracy: ±0.25% FS (includes linearity, hysteresis, and repeatability).
Temperature Limit: PBLT2: 0 to 200°F (-18 to 93°C); PBLTX: ETFE -4 to 176°F (-20 to 80°C); Polyurethane: -4 to 149°F (-20 to 65°C).
Compensated Temperature Range: PBLT2: 0 to 180°F (-18 to 82°C); PBLTX: 0 to 176°F (-18 to 80°C).
Thermal Effect: ±0.02% FS/°F.
Pressure Limit: 2X FS.
Power Requirement: PBLT2: 13-30 VDC; PBLTX: 10-28 VDC.
Output Signal: 4-20 mA DC, 2-wire.
Response Time: 50 ms.
Loop Resistance: 900 Ω.
Electrical Connection: Wire pigtail.
Mounting Orientation: Suspended in tank below level being measured.
Electrical Protection: PBLT2: Lightning and surge protection; PBLTX: None.
Weight: 3.8 lb (1.7 kg) to 4.3 lb (2.0 kg).
Compliance: PBLT2: CE, UKCA; PBLTX: CE, UKCA, cULus intrinsically safe for Class I, Div. 1, Groups A, B, C, D; Class II, Div. 1, Groups E, F, G; Class III, Div. 1; ATEX: II 1 G Ex ia IIC T4 Ga and II 1 D Ex ia IIIC T135C Da (According to control drawing 001833-44)**.

**Up to 275´ (83.8 m) for ETFE cable; Up to 470´ (143.3 m) for polyurethane cable.

MODEL CHART

Model	Range psi* (ft w.c.) [m w.c.]	Cable Length ft (m)	Cable Type
PBLT2-5-40	5 (11.54) [3.52]	40 (12.2)	ETFE
PBLT2-10-40	10 (23.09) [7.04]	40 (12.2)	ETFE
PBLT2-15-60	15 (34.63) [10.56]	60 (18.3)	ETFE
PBLT2-20-60	20 (46.18) [14.08]	60 (18.3)	ETFE
PBLT2-5-40-PU	5 (11.54) [3.52]	40 (12.2)	Polyurethane
PBLT2-10-40-PU	10 (23.09) [7.04]	40 (12.2)	Polyurethane
PBLT2-15-60-PU	15 (34.63) [10.56]	60 (18.3)	Polyurethane
PBLT2-20-60-PU	20 (46.18) [14.08]	60 (18.3)	Polyurethane
PBLT2-3.5M-5M-PU	4.97 (11.48) [3.5]	16.40 (5)	Polyurethane
PBLT2-5M-10M-PU	7.10 (16.38) [5]	32.81 (10)	Polyurethane
PBLT2-10M-18M-PU	14.21 (32.78) [10]	59.06 (18)	Polyurethane

*Configured ranges below 5 psi (11.54´ w.c.) (3.52 m w.c.) ±1% FS accuracy.

Note: For intrinsically safe approval, change model number from PBLT2 to PBLTX. For custom ranges or cable lengths, contact factory.

OPTIONS

Model	Description
-ATEX	ATEX intrinsically safe

ACCESSORIES

Model	Description
A-297	Dessicant filter for vent tube. Removes humidity for protection of the sensor. Changes color to show saturation
A-625	316 SS cable hanger use with NPT option for attaching chain for easy pulling out of application
MTL5541	Galvanic barrier
MTL7706	Intrinsically safe zener barrier

A-297

A-625

FLUSH TIP SUBMERSIBLE LEVEL TRANSMITTERS

Perfect for Sludge and Slurries, Lightning Protected, ±0.25% Accuracy, Slim Body

FBLT

FBLT with NPT option

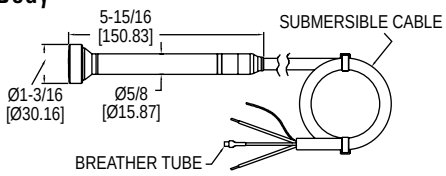

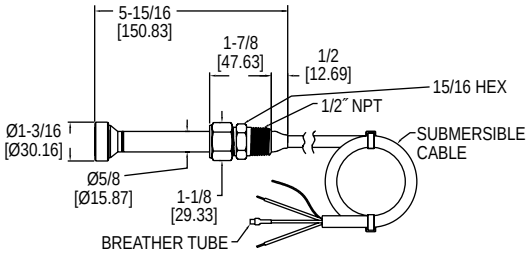

NPT option

The **Series FBLT Flush Tip Submersible Level Transmitters** measure the height of liquid above the position in the tank referenced to atmospheric pressure. The transmitter consists of a piezoresistive sensing element, encased in a narrow 316 SS housing with PTFE coated flush diaphragm tip.

BENEFITS/FEATURES

- Long operating life with a non-clog flush diaphragm tip for harsh applications
- Eliminates particulate or water droplets from entering the transducer using maintenance-free filter
- Suits harsh environments with choice of polyether polyurethane or ETFE cable materials for excellent chemical compatibility
- Increased life with lightning and surge protection utilizing dual arrestor technology, grounded to case, eliminating both power supply surges and lightning ground strike transients (surge protection is not guaranteed and is not covered by warranty)
- Meet application requirements with narrow body design allows the FBLT to fit into stilling wells and narrow installations
- Unit holds up in aggressive fluids with robust FKM fluoroelastomer diaphragm that is PTFE coated for a stick-resistant surface
- Avoid product leaks typically cause by oil or grease with diaphragm cavity that is filled with gel
- Flexible installation options with NPT connection to rigidly install in a pipe/conduit or use the A-625 hanging loop to attach a chain to remove from the installation

APPLICATIONS

- Sewage lift stations
- Industrial slurries
- Industrial sumps
- Landfill leachate
- Reservoirs
- Sludge pits
- Oil tanks

SPECIFICATIONS

Service: Compatible liquids.
Wetted Materials: Body: 316 SS; Cable: Polyether polyurethane or ETFE; Diaphragm: PTFE coated FKM fluoroelastomer; Label: Polyethylene polyamid.
Accuracy: ±0.25% FS (10´ w.c. range is ±0.30% FS).
Temperature Limits: -4 to 176°F (-20 to 80°C).
Compensated Temperature Limits: 32 to 140°F (0 to 60°C).
Thermal Effect: ±0.0075%/°F (±0.0135%/°C).
Pressure Limit: 2x range.
Power Requirements: 10-33 VDC.
Output Signal: 4-20 mA DC 2-wire.
Response Time: < 50 ms.
Max Loop Resistance: 1000 Ω @ 30 VDC.
Electrical Connections: Wire pigtail.
Mounting Connection: Suspended below point being monitored.
Electrical Protection: Surge/lightning protected per EN61000-4-5, Class 5.
Weight: Body: 0.3 lb (0.136 kg); Cable: 0.037 lb (0.017 kg) per foot.
Compliance: CE.

MODEL CHART

Model	Range psi (´ w.c.) [m w.c.]	Cable Length	Cable Type
FBLT-2SC-IVPF-20-40	8.66 (20) [6.10]	40´	Polyurethane
FBLT-2SC-IVPF-30-50	12.99 (30) [9.14]	50´	Polyurethane
FBLT-2SC-IVEF-20-40	8.66 (20) [6.10]	40´	ETFE
FBLT-2SC-IVEF-30-50	12.99 (30) [9.14]	50´	ETFE
FBLT-2SC-IVEP-10-40	10 (32.09) [7.04]	40´	ETFE
FBLT-2SC-IVEP-15-60	15 (34.63) [10.56]	60´	ETFE
FBLT-2SC-IVPP-10-40	10 (32.09) [7.04]	40´	Polyurethane
FBLT-2SC-IVPP-10-60	10 (32.09) [7.04]	60´	Polyurethane
FBLT-2SC-IVPP-15-60	15 (34.63) [10.56]	60´	Polyurethane
FBLT-2SC-IVPF-35-60	15.16 (35) [10.67]	60´	Polyurethane
FBLT-2SC-IVPP-20-60	20 (196.85) [60]	60´	Polyurethane

*4.3 to 4.9 psi (10 to 11.54 in w.c.) configured ranges ±0.30% FS accuracy

Note: Cables can be ordered shorter or longer in polyurethane or ETFE. Other ranges are available and can be ordered in psi, ft w.c., or m w.c. Please see website.

OPTIONS

To order add suffix:	Description
-FC	Factory calibration certificate
-NPT	1/2˝ NPT connection to connect conduit, piping, or cable hanger. All 316 SS

Example: FBLT-2SC-IVPF-20-40-FC

ACCESSORIES

Model	Description
A-297	Dessicant filter for vent tube. Removes humidity for protection of the sensor. Changes color to show saturation
A-625	316 SS cable hanger use with NPT option for attaching chain for easy pulling out of application

A-297

A-625

Dwyer

SERIES CRF2

CAPACITIVE LEVEL TRANSMITTER

Powder, Bulk or Liquids, No-Moving Parts, Excellent Chemical Resistance

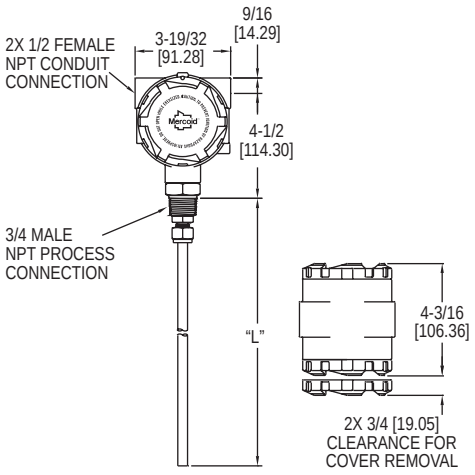

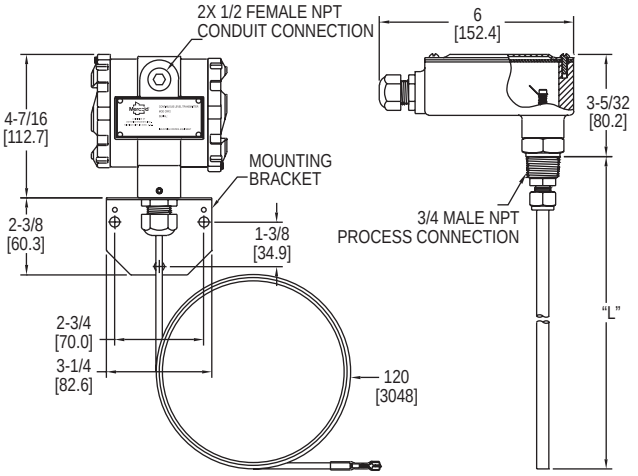

Remote mount housing

The **Series CRF2 Capacitive Level Transmitter** provides a 2-wire 4-20 mA output to indicate level of liquids, powders and bulk materials. The CRF2 senses capacitance changes resulting from the height of the material in the tank between the probe and the tank wall. In non-metallic tanks or tanks that do not have the wall parallel to the probe a ground reference must be used.

BENEFITS/FEATURES

- State of the art sensing technology, uses impulse RF admittance measurement which provides excellent accuracy and stability
- Comes with either a rigid or flexible probe depending on application installation need and probe length required
- Easy push-button calibration of zero and span
- Any length probe can be customer ordered for any specific application
- FEP covered probe is ideal for use with corrosive media
- Immune to external RF sources like walkie-talkies and cell phones as well as minimal interference with radio communication or other electronic systems

APPLICATIONS

- Pulp and paper processing
- Food and beverage
- Plastics

SPECIFICATIONS

Service: Liquids, powders, and bulk materials compatible with wetted materials.
Wetted Materials: Standard: Rod/cable: FEP, Connection: 316 SS; Ground option: Rod/cable and connection: 316 SS; Cable spacers: PVC; Flange option: Material of flange.
Capacitance Range: 0 to 2000 pF.
Sensitivity: 0.15 pF.
Minimum Span: 8 pF.
Accuracy: ±0.5 pF or ±0.25% of span, whichever is greater.
Repeatability: ±0.25 pF or ±0.1% of span, whichever is greater.
Temperature Limits: Ambient: -40 to 185°F (-40 to 85°C); Process: -40 to 250°F (-40 to 121°C).
Pressure Limit: 100 psi (6.9 bar).
Power Requirements: 12-35 VDC.
Output Signal: 4-20 mA or 20-4 mA, 2-wire.
Response Time: 0.5 s.
Electrical Connection: Screw terminal.
Conduit Connection: 1/2″ NPT female.
Process Connection: Standard: 3/4″ NPT male; Optional: See model chart.
Enclosure Rating: NEMA 4X (IP66) weather tight/corrosion resistant.
Spark/Static Protection: 10^6 Ω dissipation resistance with spark gap. Surge current to 100 A max.
Calibration: Zero, span, 4 mA, 20 mA.
Mounting Orientation: Vertical.
Weight: 6´ rod type: 3.6 lb (1.63 kg).

MODEL CHART

Example	CRF2	-W	R	0	1T	-048	-M20	CRF2-WR01T-048-M20
Series	CRF2							Capacitive level transmitter
Enclosure		W R						Weatherproof Remote mount weatherproof housing
Probe Type			R C					Rod Cable
Ground				0 A U				None included Attached ground rod (3″ or 4″ flange process connection types only) Unattached ground rod
Process Connection					1T 2T 3T 1B 2B 3B 1S 2S 3S 1F 2F 3F 4F 5F 6F			3/4″ NPT male 1″ NPT male 1-1/2″ NPT male 3/4″ BSPT 1″ BSPT 1-1/2″ BSPT 1″ sanitary clamp 1-1/2″ sanitary clamp 2″ sanitary clamp 2″ 150# flange, 316 SS 2″ 150# flange, PVC 3″ 150# flange, 316 SS 3″ 150# flange, PVC 4″ 150# flange, 316 SS 4″ 150# flange, PVC
Probe Length						XXX		Insertion length in inches. Example 048 is 48″ length. Rod type min: 24″, max: 144″; Cable type min: 24″, max: 360″
Options							M20	M20 conduit connection with cable gland
Examples: CRF2-WR01T-072; CRF2-WR01T-096								

Dwyer

SERIES CLT

CONTINUOUS LEVEL TRANSMITTER

Customize To Fit Application, 316 Stainless Steel or Buna-N Floats

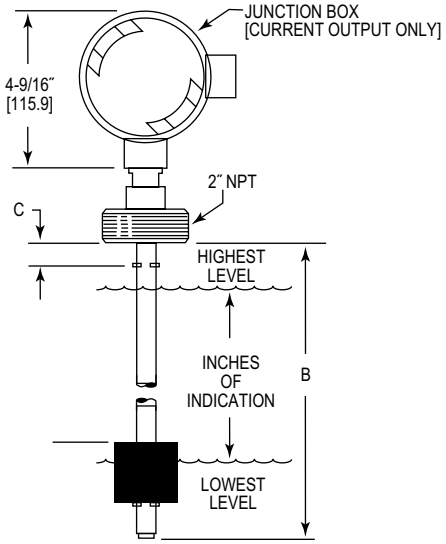

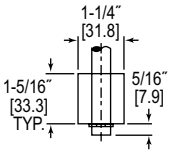

F1 float dimensions

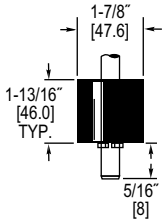

F2 float dimensions

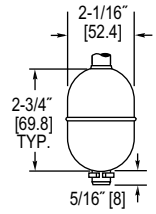

F3 float dimensions

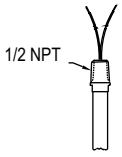

Type 1 mounting dimensions

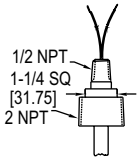

Type 3 mounting dimensions

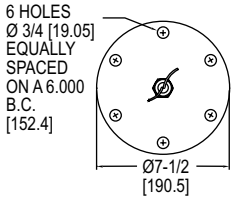

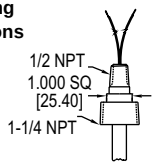

Type 2 mounting dimensions

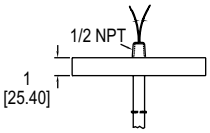

Type 4, 5 mounting dimensions

The **Series CLT Continuous Level Transmitter** provides up to the minute tank level monitoring with a customized level transmitter. Transmitters can be configured for 4-20 mA or proportional voltage output, 316 stainless steel or Buna-N stem and floats, and lengths up to 72″ (183 cm).

BENEFITS/FEATURES

- Customized stem length, actuation point, distance between floats, and lead wire lengths
- 4-20 mA or proportional voltage output outputs continuous level indication

APPLICATIONS

- General purpose level monitoring
- Low specific gravity applications
- Gas and oil

SPECIFICATIONS

Service: Compatible liquids.
Resolution: 1/4″ (6.35 mm).
Temperature Limits: Buna-N floats: 180°F (82°C) in water, -40 to 230°F (-40 to 110°C) in oil; SS floats: -40 to 230°F (-40 to 110°C).
Pressure Limits: Buna-N floats: 150 psig (10 bar); SS floats: 300 psig (21 bar).
Power Requirements: Proportional voltage output models: 10-30 VDC; 4-20 mA output models: 10-40 VDC.
Loop Resistance: 1.4k Ω max.
Electrical Connections: Proportional voltage output: 24″ (61 cm) free leads #22 AWG, TFE jacketed; 4-20 mA output: Junction box.
Enclosure Rating: 4-20 mA models, NEMA 4 (IP56) junction box.
Mounting Orientation: Vertical ±20°.

MODEL CHART

Example	CLT	-V	S	5	F3	-20.25	-02.00	-25.75	CLT-VS5F3-20.25-02.00-25.75			
Construction	CLT								Continuous level transmitter			
Output		V C							Voltage, proportional signal of 0 to supply voltage 4-20 mA (junction box provided)			
Stem and Connection Material			B S						Brass with beryllium copper stops 316 SS with SS ARMCO PH-15-7MO stops			
Connection Type				1 2 3 4 5					1/2″ NPT (output type V only) 1-1/4″ NPT (float F1 only) 2″ NPT 3″ 150# flange, carbon steel (connection material S only) [max. pres. 150 psi (10.3 bar)] 3″ 150# flange, 316 SS (connection material S only) [max. pres. 150 psi (10.3 bar)]			
Float Type					F1 F2 F3				**Material** Buna-N Buna-N 316 SS	**Min. s.g.** 0.55 0.55 0.75	**Max. Pressure** 150 psi (10.3 bar) 150 psi (10.3 bar) 300 psi (20.7 bar)	**Float Factor** 2.0″ (50.8 mm) 2.5″ (63.5 mm) 3.5″ (52.4 mm)
Indication Length						00.00			Length that the unit sends an output for level, maximum is 68″ (173 cm)			
Top Float Stop "C" Dimension Overall							00.00		Distance from bottom of mounting connection to upper float stop, minimum is 1/4″ (6.4 mm)			
Length "B"								00.00	To calculate overall length, add indication length, top float, stop dimension "C", and float factor, maximum length is 72″ (1.82 m)			

Note: Models are built to your specifications.

USA: California Proposition 65
⚠**WARNING:** This product can expose you to chemicals including Lead, which is known to the State of California to cause cancer and birth defects or other reproductive harm. For more information go to www.P65Warnings.ca.gov.

Dwyer
SERIES ULT

ULTRASONIC LEVEL TRANSMITTER

Explosion-Proof, Mapping Software, 3″ (76.2 mm) Measuring Column

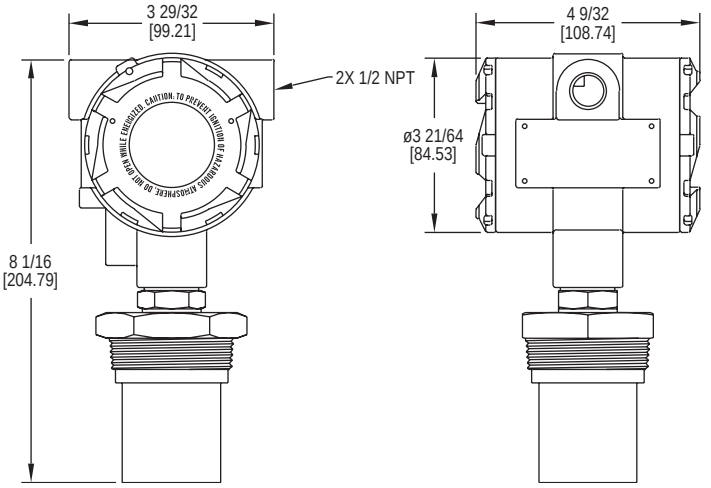

The **Series ULT Ultrasonic Level Transmitter** provides non-contact measurement of liquid levels in an explosion-proof body. It is capable of measuring up to 32.8′ (10 m) with a PVDF sensor and 4-20 mA output.

BENEFITS/FEATURES

- Provides reliable, accurate, and non-contact level measurement of compatible liquids
- Non-contact technology offers no moving parts to wear, jam, corrode, or get coated like contact technologies
- Mapping software makes effective measuring surface only a 3″ (76.2 mm) diameter column with no concerns of ladders, pipes, or other tank intrusions in the remaining sound cone
- FM approved explosion-proof making it ideal for use in hazardous locations
- Easy programming with 6 digit LCD display and simple menu structure
- Output range is adjustable with choices of inputting tank dimensions or by filling and emptying the tank while calibrating and it automatically and scaling to levels it senses
- Window cover allows easy viewing of display
- Fail-safe output options and diagnostic capabilities

APPLICATIONS

- Water and wastewater
- Pulp and paper processing
- Chemical processing
- Food and beverage

MODEL CHART

Model	Range
ULT-11	24.6′ (7.5 m)
ULT-21	32.8′ (10 m)

SPECIFICATIONS

Service: Compatible fluids. Not for use with powder and bulk solids.
Wetted Materials: Sensor: PVDF; Process connection: 303 SS; O-ring: Fluoroelastomer.
Ranges: 24.6′ (7.5 m), 32.8′ (10 m).
Accuracy: ±0.2% FS.
Resolution: 0.079″ (2 mm).
Blind Zone: Under 8″ (20 cm).
Beam Width: 3″ (7.6 cm) diameter.
Temperature Limits: Ambient: -40 to 140°F (-40 to 60°C); Process: -4 to 140°F (-20 to 60°C).
Temperature Compensation: -40 to 140°F (-40 to 60°C).
Pressure Limits: 30 psi (2 bar) up to 25°C (77°C). Above 25°C (77°F), rating decreases 1.667 psi per 1°C increase. See chart.
Power Requirement: 18-28 VDC (2-wire).
Output Signal: 4-20 mA or 20-4 mA (2-wire).
Max. Loop Resistance: 250 Ω at 24 VDC.
Electrical Connections: Screw terminal.
Conduit Connection: 1/2″ NPT female (two) or optional M20.
Process Connection: 2″ NPT male or optional BSPT.
Enclosure Rating: Weather-proof meets NEMA 4X (IP66), explosion-proof rated Class I, Div. 1, Groups B, C, D; Class II/III, Div. 1, Groups E, F, G.
Mounting Orientation: Vertical.
Failsafe: On lost echo after 30 seconds, user selectable to 4, 20, 21, 22 mA or last signal.
Memory: Non-volatile.
Display: 6 character LCD.
Units: In, cm, ft, m, percent.
Programming: 4 button.
Weight: 4.0 lb (1.8 kg).
Agency Approvals: CE, FM.

TEMPERATURE/PRESSURE DERATING

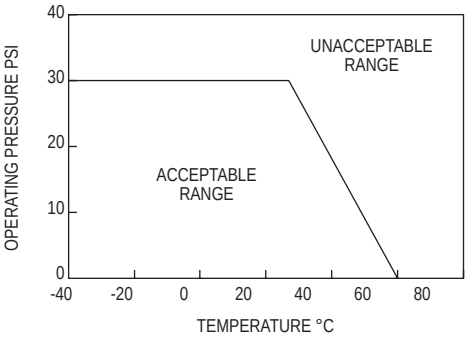

Dwyer

SERIES ULSS, ULSM & ULSL

ULTRASONIC LEVEL SENSORS

Non-Contact Transmitter, SPST Programmable Relays

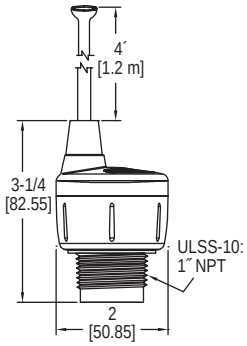

ULSS

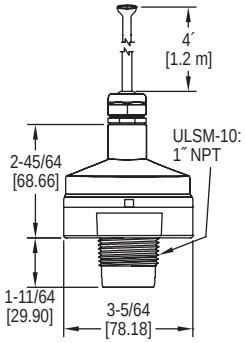

ULSM

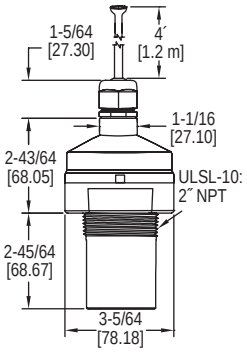

ULSL

VIDEO ONLINE

The **Series ULSS Ultrasonic Level Sensor** provides non-contact, continuous ultrasonic level measurement of fluids for short range applications. It has a 4.1´ (1.2 m) measuring range with a 0.125´´ (3 mm) accuracy.
The **Series ULSM Ultrasonic Level Sensor** provides non-contact, continuous ultrasonic level measurement of fluids for medium range applications. It has a 9.8´ (3 m) measuring range with a ±0.2% of range accuracy.
The **Series ULSL Ultrasonic Level Sensor** provides non-contact, continuous ultrasonic level measurement of fluids for tall range applications. It has a 18´ (5.5 m) measuring range with a ±0.2% of range accuracy.

BENEFITS/FEATURES

- Via free software, units can be programmed to transmit an output signal and operate four relays for control applications
- Provides reliable, accurate, and non-contact level measurement of compatible liquids
- Non-contact technology offers no moving parts to wear, jam, corrode, or get coated like contact technologies
- Mapping software makes effective measuring surface only a 3´´ (76.2 mm) diameter column with no concerns of ladders, pipes, or other tank intrusions in the remaining sound cone
- Ultrasonic technology paired with automatic temperature compensation provides accurate and reliable measurements in almost all conditions
- Fail-safe logic is easily configured to custom applications via free software removing the need for target calibration
- Full NEMA 6P submersible enclosure rating to ensure excellent product durability

APPLICATIONS

- Water and wastewater
- Pulp and paper processing
- Sump and process tanks
- Chemical processing
- Food and beverage

SPECIFICATIONS

Service: Compatible fluids.
Wetted Materials: Sensor: PVDF; O-ring: FKM.
Ranges: See chart.
Accuracy: ULSS: 0.125´´ (3 mm); ULSM & ULSL: ±0.2% of range.
Resolution: ULSS: 0.019´´ (0.5 mm); ULSM: 0.039´´ (1 mm); ULSL: 0.079´´ (2 mm).
Blind Zone: ULSS: 2´´ (5 cm); ULSM: 4´´ (10 cm); ULSL: 8´´ (20 cm).
Beam Width: ULSS & ULSM: 2´´ (5 cm); ULSL: 3´´ (7.62 cm).
Temperature Limits: Process: 20 to 140°F (-7 to 60°C); Ambient: -31 to 140°F (-35 to 60°C).
Temperature Compensation: Automatic.
Pressure Limit: 30 psi (2 bar).
Power Requirement: 12-28 VDC.
Output Signal: 4-20 mA, 2-wire; Invert: 4-20 mA or 20-4 mA; Fail-safe: 4 mA, 20 mA, 21 mA, 22 mA, or hold last.
Loop Resistance: 400 Ω max.
Electrical Connections: 4´ (1.2 m) 9 conductor shielded cable.
Contact Type: 4 SPST relays.
Contact Rating: 1 A max @ 28 VDC max.
Deadband: Selectable (no hysteresis, 1/4´´, 1/2´´, 1´´, 1/2 cm, 1 cm, 2 cm, 5 cm or not available).
Process Connection: 1´´ NPT, 1´´ BSPP (optional).
Enclosure Rating: NEMA 6P (IP68).
Enclosure Material: Polycarbonate; Gland: TPE.
Mounting Orientation: Vertical.
Memory: Non-volatile.
Failsafe: Contact: Power loss: Holds last contact; Power on: Open, close, or last contact.
Programming: Free PC software download (USB adaptor required).
Weight: 1 lb (0.45 kg).
Agency Approvals: CE.

MODEL CHART

Model	Range
ULSS-10	4.1´ (1.25 m)
ULSM-10	9.8´ (3 m)
ULSL-10	18´ (5.5 m)

Note: USB adoptor necessary for calibration. One adaptor can program multiple units.

ACCESSORIES

Model	Description
ULS-ACC-121	2´´ x 1´´ NPT reducer bushing fitting (sch. 40), PVC
ULS-ACC-122	2´´ x 1´´ NPT reducer bushing fitting (sch. 80), PVC
ULS-ACC-131	3´´ x 2´´ NPT reducer bushing fitting (sch. 40), PVC
ULS-ACC-132	3´´ x 2´´ NPT reducer bushing fitting (sch. 80), PVC
ULS-ACC-142	4´´ x 2´´ NPT reducer bushing fitting (sch. 80), PVC
ULS-ACC-221	2´´ socket x 1´´ NPT reducer bushing fitting (sch. 40), PVC
ULS-ACC-222	2´´ socket x 1´´ NPT reducer bushing fitting (sch. 80), PVC
ULS-ACC-231	3´´ socket x 2´´ NPT reducer bushing fitting (sch. 40), PVC
ULS-ACC-232	3´´ socket x 2´´ NPT reducer bushing fitting (sch. 80), PVC
ULS-ACC-241	4´´ socket x 2´´ NPT reducer bushing fitting (sch. 40), PVC
ULS-ACC-242	4´´ socket x 2´´ NPT reducer bushing fitting (sch. 80), PVC
ULS-ACC-510	1´´ NPT polypropylene side mount bracket
ULS-ACC-520	2´´ NPT polypropylene side mount bracket
ULS-ACC-USB	USB adaptor for calibration, PVC

Dwyer
SERIES MPC

PUMP CONTROLLER

One or Two Pump Control with Built-In Alternation, Over Temperature Protection and Seal Failure Monitoring

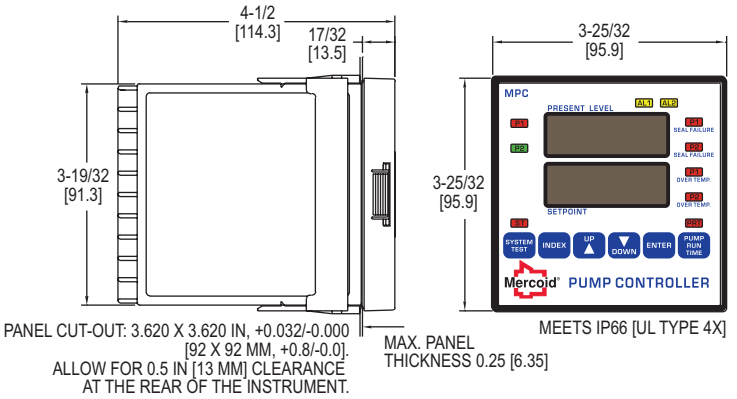

The **Series MPC Pump Controller** provides versatile level control in a standard 1/4 DIN package. Designed for use with almost any style level transmitter the unit displays the present level and main set point value. Incorporated in the MPC is programmable level differential for on/off control of one or two pumps, valves, or other devices through two SPDT relays.

BENEFITS/FEATURES

- Selectable pump alternation when used with two pumps to minimize pump wear, with alternation "on" a seal failure or over temperature condition will force the non-failed pump to lead status and stop alternation
- Alarms can be programmed for output indication of pump seal failure or over temperature
- Selectable time delay, for pump two, on power up to prevent both pumps from starting at the same time
- In the event of power loss, upon regaining power a time delay of up to 60 seconds can be selected to prevent excessively large current draw
- Test system function simulates the process input to ensure the pumps are operating or to test programming
- User-friendly programming menu

APPLICATIONS

- Water and wastewater
- Sump and sludge pits, clarifiers, digesters
- Chemical storage tanks
- Oil tanks
- Reservoirs

SPECIFICATIONS

Inputs: 4 (or 0)-20 mA DC or 2 (or 0)-10 VDC selectable.
Input Impedance: Current = 10 Ω; Voltage = 100 K Ω.
Output Ratings: Control relays: SPDT, rated 10 A @ 240 VAC res., 1/4 hp @ 120 VAC, 1/3 hp @ 240 VAC; Alarm relays: SPST, 3 A @ 240 VAC res., 1/10 hp @ 120 VAC.
Control Type: On/off, reverse (pump out) or direct (pump in) acting.
Output Signal: 4-20 mA current process input retransmission.
Power Requirements: 100-240 VAC nominal, +10%-15%, 50 to 400 Hz, single phase; 132-240 VDC nominal, +10%-15%.
Enclosure Rating: NEMA 4X (IP66) front panel face.
Power Consumption: 7.5 VA max.
Accuracy: ±0.25% of span, ±1 least significant digit.
Display: Two 4 digit, 7 segment 0.56˝ high LED's.
Display Resolution: 1 count.
Memory Backup: Nonvolatile memory (no batteries required).
Serial Communications: Optional RS-232 or RS-485 with Modbus® protocol.
Ambient Operating Temperature/RH: 14 to 131°F (-10 to 55°C)/0 to 90% up to 104°F (40°C) non-condensing, 10 to 50% at 131°F (55°C) non-condensing.
Front Panel Rating: Meets UL Type 4X (IP66).
Loop Power Supply (Isolated): 24 VDC @ 50 mA, regulated.
Seal Failure (Moisture Sensor): Power: 2.5 VDC; Search current: 3 micro amps; Resolution: 10K to 500K Ω in 10K Ω steps.
Weight: 16 oz (454 g).
Agency Approvals: cULus.

MODEL CHART

Model	Description
MPC	Pump controller

OPTIONS

To order add suffix:	Description
-232	RS-232 Modbus® RTU serial communications
-485	RS-485 Modbus® RTU serial communications
-RV	2-20 VDC voltage retransmission

ACCESSORIES

Weatherproof Enclosures, NEMA 4X (IP66).❶

A-901

Modbus® is a registered trademark of Schneider Automation, Inc.

Compatible Level Transmitters: See page 328 (Series SBLT2)
See page 330 (Series PBLT2)
Additional Digital Control Panel Meters: See page 338 (Series APM/MPM/PPM)
❶See page 339 (Series A-900 & A-901)

Dwyer

SERIES MPC JR

PUMP CONTROLLER

One or Two Pump Control with Built-In Alternation

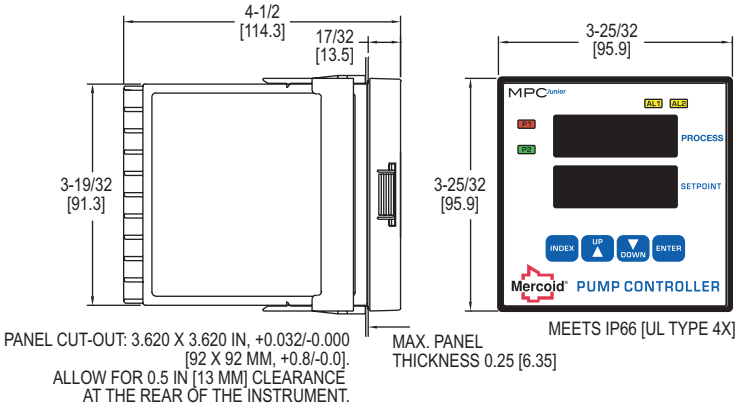

The **Series MPC JR Pump Controller** provides versatile level control in a standard 1/4 DIN package. Designed for use with almost any style level transmitter the unit displays the present level and main set point value. Incorporated in the MPC JR is programmable level differential for on/off control of one or two pumps, valves, or other devices through two SPDT relays.

BENEFITS/FEATURES

- Selectable pump alternation when used with two pumps to minimize pump wear
- Integral 24 VDC power supply for transmitter
- User selectable security lock-out of programming and/or set points
- Optional process input retransmission as a current (4-20 mA) or voltage (2-10 VDC) analog signal
- Analog output on pump "on" condition for activation of separate pump run time meters

APPLICATIONS

- Water and wastewater
- Sump and sludge pits, clarifiers, digesters
- Chemical storage tanks
- Oil tanks
- Reservoirs

SPECIFICATIONS

Inputs: 4 (or 0) to 20 mA DC or 2 (or 0) to 10 VDC selectable.
Input Impedance: Current = 10 Ω; Voltage = 5 K Ω.
Output Ratings: Control relays: SPDT, rated 10 A @ 240 VAC res.,1/4 hp @ 120 VAC, 1/3 hp @ 240 VAC; Alarm relays: SPST, 3 A @ 240 VAC res., 1/10 hp @ 120 VAC; Others: 15 VDC @ 20 mA for output one and output two.
Control Type: On/off, reverse (pump out) or direct (pump in) acting.
Power Requirements: 100-240 VAC nominal, +10%-15%, 50 to 400 Hz, single phase; 132-240 VDC nominal, +10%-15%.
Power Consumption: 7.5 VA max.
Accuracy: ±0.25% of span, ±1 least significant digit.
Display: Two 4-digit, 7 segment 0.56˝ high LED's.
Display Resolution: 1 count.
Memory Backup: Nonvolatile memory (no batteries required).
Serial Communications: Optional RS-232 or RS-485 with Modbus® protocol.
Ambient Operating Temperature/RH: 14 to 131°F (-10 to 55°C)/0 to 90% up to 104°F (40°C) non-condensing, 10 to 50% at 131°F (55°C) non-condensing.
Front Panel Rating: Meets UL Type 4X (IP66).
Loop Power Supply (Isolated): 24 VDC @ 50 mA, regulated.
Weight: 16 oz (454 g).
Agency Approvals: cULus.

MODEL CHART

Model	Description
MPCJR	Pump controller

OPTIONS

To order add suffix:	Description
-232	RS-232 Modbus® RTU serial communications
-485	RS-485 Modbus® RTU serial communications
-RC	Retransmission of input, 4-20 mA
-RV	Retransmission of input, 0-10 VDC

ACCESSORIES

Weatherproof Enclosures, NEMA 4X (IP66).❶

A-901

Modbus® is a registered trademark of Schneider Automation, Inc.

Compatible Level Transmitters: See page 328 (Series SBLT2)
See page 330 (Series PBLT2)
❶See page 339 (Series A-900 & A-901)

Dwyer

SERIES APM, MPM & PPM

PANEL METERS & PUMP CONTROLLERS

Open Channel Flow, Rate and Total, Multi-Pump Control

APM

MPM

PPM

The **Series APM Panel Meter** is a 1/8 DIN digital panel meter perfect for displaying flow rate and total simultaneously from several analog inputs such as a 4-20 mA or 0-10 V from any flow transmitter. When utilized with an ultrasonic level transmitter, such as the Mercoid Series ULT, this series provides an economical way to measure open channel flow. The dual line display can be configured to read flow rate, total, grand total, as well as engineering units.

The **Series MPM Pump Controller** is also a 1/8 DIN digital panel meter but for multi-pump alternation control. This series features, non-latching, sampling, and fail-safe action in addition to its ability to alternate up to four pumps. This series is also capable of linearizing nonlinear inputs with a variety of pre-programmed math functions. This is helpful in applications where volume is monitored in odd shaped tanks as well as open channel flow monitoring. It accepts 0-20 mA, 4-20 mA, 0-5 V, 1-5 V or 0-±10 V standard.

The **Series PPM Panel Meter** is a 1/8 DIN digital panel meter specifically designed for a variety of pulse inputs. This series is particularly well-suited for flow applications with its large six-digit, dual-line display that can display flow rate and total simultaneously with up to 4 programmable relay options and 4-20 mA output. This series features latching, non-latching, sampling, and fail-safe action in addition to its pump alternation function.

For more information on these products: See page 352

1/4 DIN CONTROL ENCLOSURES

Weatherproof, Durable, Pre-Cut Mounting Hole

A-900

A-901

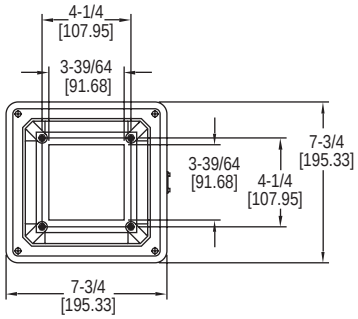

Top view

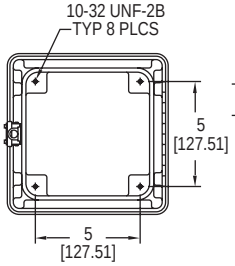

Bottom view

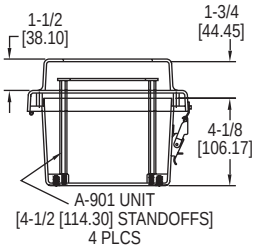

Side view

The **Model A-900 & A-901 1/4 DIN Control Enclosures** are rated weatherproof type NEMA 4X to protect controls from dirt, dust, oil, and water. The Model A-900 comes with a standard 1/4 DIN cutout in the front cover and the Model A-901 comes with a clear plastic front window. Both units feature a lockable latch to prevent unauthorized removal of the control from the enclosure.

BENEFITS/FEATURES

- Can be used outdoors with UV stabilized material
- Simple installation with fiberglass material, which is easily punched or drilled for conduit connections
- Versatile units are compatible with Love® controls Series 2500, 2600, 4B, 4C, and 4G, and Mercoid® Series MPC and MPCJR

APPLICATIONS

- Wastewater remote pump stations
- Outdoor industrial ovens/furnaces/boilers

MODEL CHART	
Model	**Description**
A-900	Weatherproof enclosure, NEMA 4X, control direct panel mounts in the front of the enclosure
A-901	Weatherproof enclosure, NEMA 4X, clear plastic window with rear panel for mounting the control inside the enclosure

FOR MODELS: 25XX3, 26XX3, 26X3X, 26X33, MPC, MPCJR		
Ambient Temperature	**A-900 Maximum Current**	**A-901 Maximum Current**
77°F (25°C)	10 amps	10 amps
104°F (40°C)	10 amps	9 amps
131°F (55°C)	7.5 amps	6 amps

ACCESSORIES	
Model	**Description**
A-600	R/C snubber

SPECIFICATIONS

Service: Indoor or outdoor.
Rating: NEMA 1, 2, 3, 3R, 4, 4X, 12 and 13.
Materials: Body: UV stabilized fiberglass reinforced polyester; Snap latch: 304 SS; Hinge: SS; Mounting feet and screws: 304 SS; Window: UV stabilized polycarbonate; Cover gasket: Neoprene.
Enclosure Rating: NEMA 4X (IP66).
Control Temperature Limits: When using the enclosures with controls that have 10 A relay outputs the extra heat generation decreases the maximum ambient temperature value that the control can be used at inside the enclosure. Other outputs on our controls are not a concern.
Agency Approvals: UL.

Dwyer

SERIES EBV

ELECTRIC BIN VIBRATOR

Adjustable Vibration Intensity

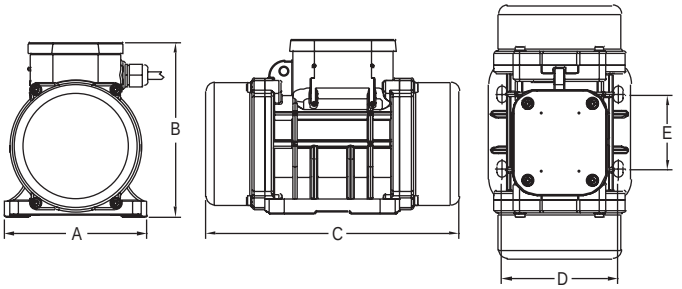

DIMENSIONS - IN (MM)					
Model	**A**	**B**	**C**	**D**	**E**
EBV-1	5-1/8 [130]	5-23/64 [136]	8-5/16 [211]	4-11/64 [106]	2-43/64 [68]
EBV-2	5-1/8 [130]	5-23/64 [136]	8-5/16 [211]	4-11/64 [106]	2-43/64 [68]
EBV-3	5-1/8 [130]	6-17/64 [159]	9-3/32 [231]	4-11/64 [106]	2-43/64 [68]
EBV-4	6-7/64 [155]	6-23/32 [170]	10-23/64 [263]	4-7/16 [113]	5-1/8 [130]

The **Series EBV Electric Bin Vibrator** features an adjustable force, which increases the application flexibility and reduces equipment downtime and labor expense. The low amperage draw at 120 V reduces power consumption and makes the vibrators usable in any application. The EBV is capable of running continuously at 100% force output without overheating or mechanical damage.

BENEFITS/FEATURES

- NEMA 4X (IP66) aluminum housing
- Centrifugal force can be adjusted as needed
- Silent operation at 20 dB

APPLICATIONS

- Bin vents
- Bag houses
- Dust collectors

MODEL CHART						
	Max Power		**Centrifugal Force**		**Current**	**Weight**
Model	**Kw**	**Hp**	**Kg**	**lb**	**Max Amps**	**lb**
EBV-1	0.09	0.12	71	156.5	1.03	9.3
EBV-2	0.11	0.15	95	209.4	1.3	10.1
EBV-3	0.21	0.28	189	416.7	2.62	15.4
EBV-4	0.28	0.38	323	712.1	3.43	21.6

SPECIFICATIONS

Power Requirements: 120 VAC.
Power Consumption: See model chart.
Temperature Limits: -4 to 104°F (-20 to 40°C).
Enclosure: Aluminum.
Enclosure Rating: NEMA 4X (IP66).
Noise Level: 20 dB.
Electrical Connection: Electrical junction box.
Rotational Speed: 3600 RPM.
Weight: See model chart.
Agency Approvals: CE.

SELECTION GUIDE
pages 342-345

TYPICAL APPLICATIONS
pages 346-347

Panel Meters/Indicators
pages 348-352

Annunciators/ Alarm Modules
page 353

Relays
pages 354-355

Current Transformers/ Switches
pages 356-359

Power Transformers
page 360

Signal Converters
page 361

Power Supplies
pages 361-362

Vibration Controls
page 363

Timers
page 364

Intrinsically Safe Barriers
pages 365-366

Safety
pages 367

Timer Controllers
pages 368-373

Particulate (Dust or Broken Bag) Transmitters
page 374

Control Enclosures
pages 375-376

FEATURED PRODUCTS

GRAPHICAL USER INTERFACE PANEL METER

SERIES SPPM2 | page 348

- Large touch screen display allows for easy visibility and setup
- Free design software allows seamless drag and drop functionality to quickly develop unique interface

PARTICULATE TRANSMITTER

SERIES PMT2 | page 374

- Non-stick PTFE coated probe to prevent false readings from moist and conductive dusts, condensate, and dust buildup
- Simple 2-wire installation for PLC and control panels

Dwyer

PANEL METERS
Displays

SERIES	SPPM2 - page 348	SPPM - page 349	DPMA, DPMW, DPMP, & DPML - page 350	DPMX - page 351
Display	Graphical full color TFT	Graphical full color TFT	3-1/2 digit, or 4-1/2 digit, 7 segment backlit LCD (amber, green or red)	3-1/2 digit, 7 segment backlit LCD (red)
Panel Size	4.3″ diag.	2.4″, 2.8″, 3.5″ diag.	2-3/8″ by 1-1/8″	10-19/32″ by 4-5/32″
Display Units	User defined	User defined	None, °F, °C, %, psi, V, A, KW, PF	None
Input Signal	4 analog (0-50 mA, or 0-40 VDC), 8 digital I/O	0-50 mA, or 0-40 VDC	4-20 mA, 0-200 mVDC, 0-5 VDC, 0-10 VDC	4-20 mA, 0-200 mVDC, 0-5 VDC, 0-10 VDC
Output	2 digital I/O, 4 PWM	None	None	None

SWITCHES AND TRANSFORMERS
Current Sensors

SERIES	SCS - page 356	MCS - page 357	CCS - page 357	MSCS - page 358
Type	Current switch	Miniature switch	Current switch	Miniature switch
Case	Solid or split core	Solid core or terminal	Solid or split core	Split core
Range	0.15 A to 200 A	0.5 to 50 A or 0.01 to 1 A	0.5 to 200 A	0.15 to 60 A (0.15 A fixed set point)
Output	1 A @ 30 VAC/DC NO solid state output; Optional 10 A @ 260 VAC (5 A @ 30 VDC) SPST relay	0.3 A @ 130 VAC/DC NO output	0.3 A @ 135 VAC/DC NO output or 1 A @ 240 VAC NO output	1 A @ 30 VAC/DC NO solid state output

These Selection Guides are for quick comparison of similar products. Please refer to the catalog page number referenced for complete product information and specifications.

PANEL METERS
Displays

SERIES	LCI132 - page 351	PPM - page 352
Display	4 digit, 7 segment LED (red)	2 - 6 digit, 7 segment LED (red)
Panel Size	1/32 DIN	1/8 DIN
Display Units	None	User defined
Input Signal	V (DC), mA (DC) or V (AC), A (AC/DC)	mA, V DC, pulse, open collector, NPN, PNP, switch contact
Output	None	None, 4-20mA, or Relay

SWITCHES AND TRANSFORMERS
Current Sensors

SERIES	SSCS - page 358	CCT40/50 - page 359	CCT60/70 - page 359
Type	Current switch with set point based on motor HP	Current transformer	Current transformer
Case	Split core	Solid or split core	Solid or split core
Range	1 to 100 HP	10/20/50 A or 100/150/200 A	10/20/50 A or 100/150/200 A
Output	1 A @ 30 VAC/DC NO solid state output; Optional 10 A @ 260 VAC (5 A @ 30 VDC) SPST relay	0-5 VDC, 0-10 VDC, or 4-20 mA	4-20 mA, true RMS

These Selection Guides are for quick comparison of similar products. Please refer to the catalog page number referenced for complete product information and specifications.

POWER SUPPLIES AND TRANSFORMERS

Power Converters

SERIES	APT - page 360	A-700 - page 361	BPS - page 362	SCD-PS - page 362
Input Voltage	24 VAC, 120 VAC, 240 VAC, 120/208/240/277 VAC, 120/208/240/277/480 VAC, 50/60 Hz	100/120/220/230/240 VAC ±10%. 47 to 63 Hz	24 VAC/VDC 50/60 Hz	120 to 240 VAC/VDC, 50/60 Hz
Output Voltage	24 VAC	24-28 VDC regulated	1.5-27 VDC (full wave rectified and regulated) adjustable 1.5-29 VDC	24 VDC ±3%
Output Current	20, 40, 75, 100, 150 VA	Options from 0.5 A to 4.8 A	0.5 A or 1.5 A	1 A

These Selection Guides are for quick comparison of similar products. Please refer to the catalog page number referenced for complete product information and specifications.

DUST COLLECTOR PULSE VALVE CONTROLLERS

Timers

SERIES	SVT - page 368	DCT500A - page 369	DCT500ADC - page 370	DCT600 - page 371	DCT1000 - page 372	DCT1000DC - page 373
Output Channels	2, 3, 4, 5,or 6; up to 60 with expansion board. Housing includes pilot solenoid valves	4, 6, or 10	4, 6, or 10	4, 6, 10, 22, or 32	6, 10, or 22; up to 255 with expansion board	6, 10, or 22; up to 255 with expansion board
Input	Dry contact	Dry contact	Dry contact	Dry contact	Dry contact or integral pressure sensor	Dry contact or integral pressure sensor
Power	90-240 VAC or 24 VAC/DC	102-132 VAC	10-35 VDC	85-270 VAC	85-270 VAC	10-30 VDC
Size	See catalog page	4-7/8″ by 6-3/4″	4-7/8″ by 6-3/4″	4-7/8″ by 6-3/4″ or 6-7/8″ by 8-3/4″	6-7/8″ by 8-3/4″	6-7/8″ by 8-3/4″
Approvals	CE	CE, cULus	CE	CE, cULus	cULus	CE

These Selection Guides are for quick comparison of similar products. Please refer to the catalog page number referenced for complete product information and specifications.

Monitor the test environment for accurate laboratory tests

The Love Controls® Model LCR20 dual pen circular chart recorder can be used to monitor the humidity and temperature in an environmental chamber. The 10″ chart size makes it easy to see the blue and red pen markings on the chart paper. The recorder takes in most common thermocouples and process inputs for both channels. It is recommended that the LCR20 be used with a Dwyer® RHP series humidity / temperature transmitter for best results.

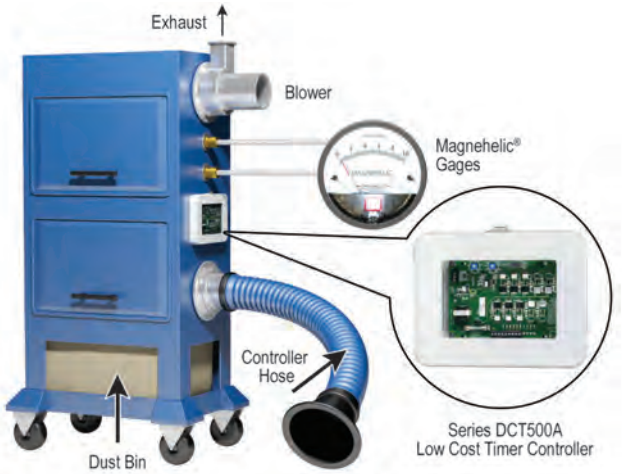

Dust Collector Timer Controller shows filter condition in dust collector

This portable dust collector can be rolled from job to job in an industrial building. An operator places the large diameter collection hose where it is needed and dust is collected by filters located inside the access doors on the units side. The top mounted blower draws air through the filters. To monitor the pressure drop across the filters, the manufacturer supplies a Magnehelic® differential pressure gage. When the pressure drop due to dust build up on the filter indicates that cleaning is necessary, the DCT500A dust collector timer controller is manually activated to initiate a cleaning cycle which involves solenoid valves releasing pulses of air. This process removes the dust from the filters where it drops into a storage bin. A Dwyer® Minihelic® differential pressure gage can be used instead of the Magnehelic® gage, and, if automatic cleaning is required, a Photohelic® differential pressure switch/gage can provide the electrical contact to actuate the cleaning cycle when the pressure drop reaches the preset limit.

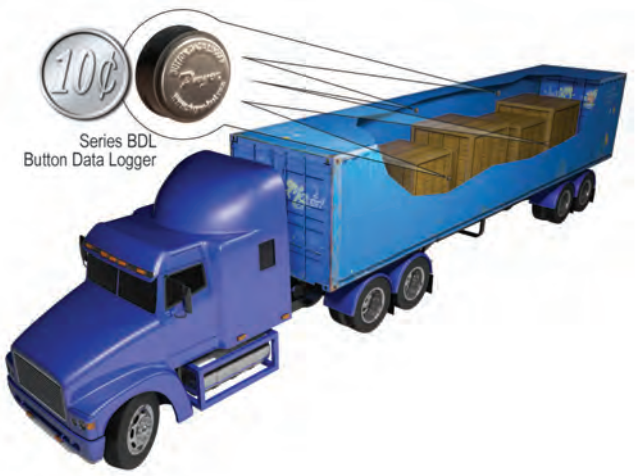

Button Data Logger monitors food and beverage temperature in refrigerated transport vehicles

When transporting temperature-sensitive products such as meat, produce, beer and wine over long distances, it is necessary to verify that the storage compartment has not exceeded the critical preservation temperature at any time. Dwyer® BDL button data loggers offer a low cost way to measure and record storage temperatures throughout transport. By placing several "buttons" throughout the storage compartment and setting an appropriate measurement interval, transportation services can retrieve data at the completion of delivery to assure their customers of adequate preservation temperatures.

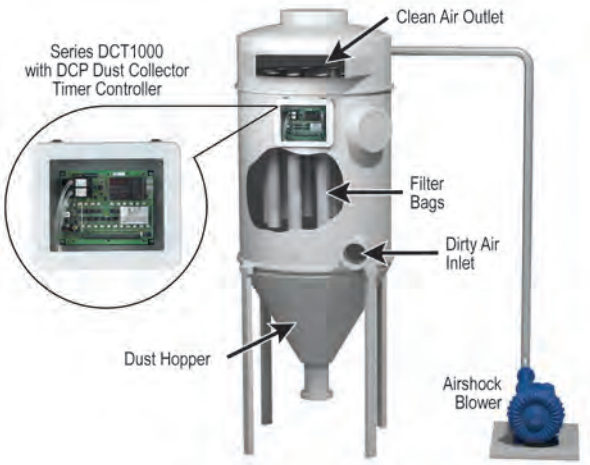

Bag house cleaning system uses Dust Collector Timer Controller to initiate optimum cleaning cycle

A Dwyer® DCT1000 dust collector timer controller with attachable DCP pressure sensing module monitors and controls the dust levels and corresponding pressure drop across the filter bags. The DCT1000/DCP control automatically activates the cleaning cycle when the DCT1000's pre-programmed set points have been exceeded. This on-demand control system alleviates excessive air compressor usage by preventing unnecessary cleaning which lowers energy and maintenance costs.

Providing remote indication of pressure, humidity or temperature

The Series DPML, DPMP, and DPMW digital LCD panel meters as well as the SPPM and SPPM2 HMI panel meters provide remote indication in the designated engineering units for pressure, humidity, temperature as well as customizable measurement units. The panel meters can take a voltage or current input signal from transmitters such as the Dwyer® TTE, Series 626 or Series RHP.

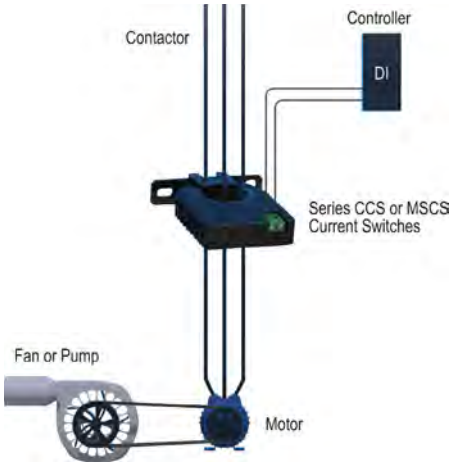

Monitor the status of your fan or pump

The Dwyer® Series SCS current switches monitor the input current into a fan or pump motor starter in order to monitor the status of the equipment. As the current passes through the core of the switches, it generates enough energy to power up the switch eliminating the need for extra power wires. The solid core models are typically used on new installations, while the split core models are able to mount on existing or new installations.

Dwyer

SERIES SPPM2

GRAPHICAL USER INTERFACE PANEL METER

4.3″ (109 mm) Touch Screen Display, Fully Customizable

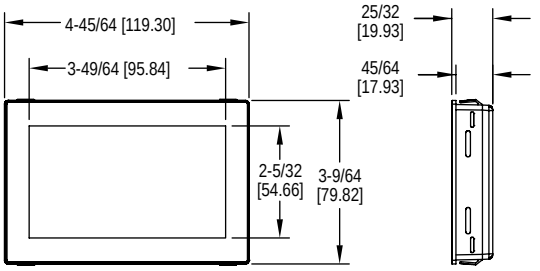

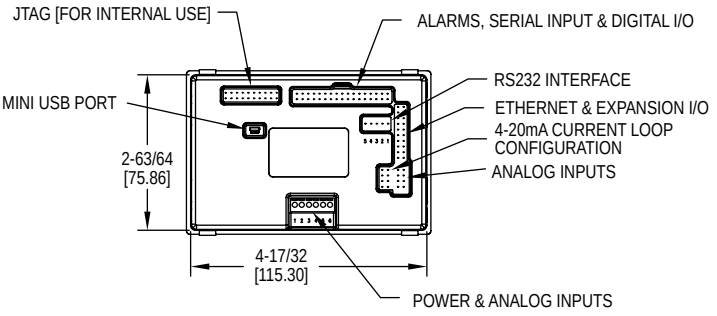

VIDEO ONLINE

The **Series SPPM2 Graphical User Interface Panel Meter** is a configurable, full-color 4.3″ (109 mm) touch screen display that can be used in a variety of applications. By using the free Windows® based Interface Panel Design Studio software, users can personalize the display with buttons, switches, and analog and digital scales to suit their needs. A development kit is also available, which includes a development board with buttons, dials, LEDs, and screw terminals to test the functionality of all inputs and outputs.

BENEFITS/FEATURES

- Large 4.3″ touch screen display can be powered from USB or 5-30 VDC supply
- Free design software allows users to drag and drop elements onto the screen to quickly develop their specific interface
- Accepts up to 4 analog inputs, 8 digital I/O, 4 PWM outputs, and 2 open collector alarm outputs

APPLICATIONS

- Lift station pump control
- Room condition monitoring display
- Walk-in refrigeration/freezer control

MODEL CHART

Model	Description
SPPM2-43	4.3″ interface panel
SPPM2-43-D	4.3″ interface panel with development board

SPECIFICATIONS

Inputs: Mini-USB, 6-line screw terminal analog, 4 x ±40 V, or 4-20 mA, 8 x digital I/O.
Outputs: 4 x PWM, 2 x alarms (open collector).
Accuracy: ±0.05% ±0.1 mV (typ).
Resolution: 0.04 mV (max) or 4 decimal places.
Power Supply: USB port or 5-30 VDC.
Current Consumption: 400 mA at 5 VDC.
Display: 4.3″ (10.9 cm) TFT LCD with 262k colors.
Display Resolution: 480 x 272 pixels.
Sampling Rate: 10 samples/s.
Temperature Limits: 32 to 104°F (0 to 40°C).
Warm Up: 15 s.
Mounting: Panel mount.
Electrical Connection: Multi-pin DIL's, 1 mini-USB, and 1 RS232.
Software Requirements: Compatible with Windows® 7, Windows® 8 and Windows® 10.
Weight: 6.7 oz (181 g).
Approvals: CE.

DEVELOPMENT BOARD SPECIFICATIONS

Inputs: 4 x ±5 VDC.
Outputs: 8 x digital I/O's, 4 x PWM outputs.
Serial Communication: RS232.
Power Supply: USB port or 5-30 VDC.
Weight: 19.7 oz (560 g).

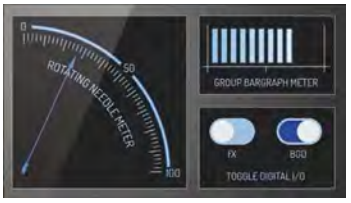

Windows® is a registered trademark of Microsoft Corporation

SMART PROGRAMMABLE PANEL METERS

Fully Field Configurable, 16-Bit Color Touch Screen Display

SPPM-HSG

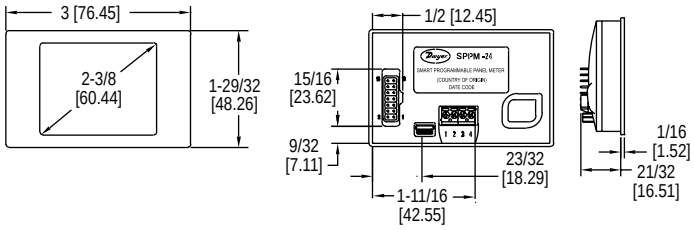

SPPM-24 and SPPM-24-C

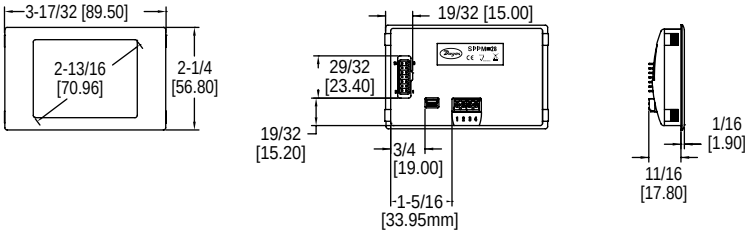

SPPM-28 and SPPM-28-C

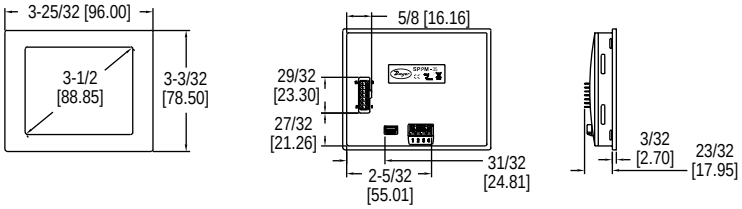

SPPM-35 and SPPM-35-C

The **Series SPPM Smart Programmable Panel Meters** are configurable full-color touch screen displays that can be used in a variety of applications. By using a USB connection, the panel meter can be configured with downloadable software for any computer running Windows® based software. The display features remarkable graphics that can easily be customized to read and/or graph pressure, temperature, humidity, gas concentration, or many other parameters.

BENEFITS/FEATURES

- Available with 2.4″, 2.8″, or 3.5″ color touch screen display
- Free downloadable Windows® software allows the unit to be customized to specific applications

APPLICATIONS

- Tank level
- Power monitoring
- Room pressurization condition
- Indoor air quality conditions

SAMPLE PROGRAMMABLE DISPLAY CONFIGURATIONS

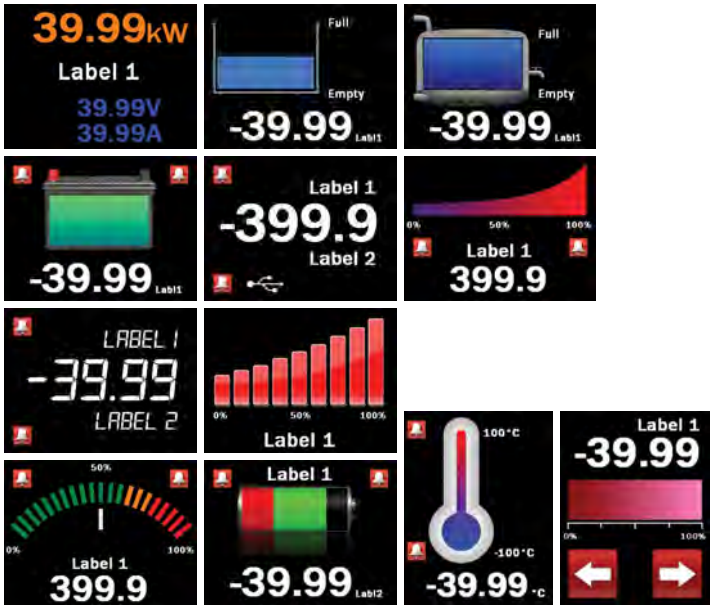

SPECIFICATIONS

SPPM SPECIFICATIONS
Inputs: Current: 0-50 mA, scalable (factory set from 4-20 mA); Voltage: 0-40 VDC, scalable (factory set from 0-10 V).
Accuracy: 0.1%.
Resolution: 0.3 to 9.8 mV (depending on input range).
Power Supply: 4-30 VDC max or via USB.
Current Consumption: 190 mA max.
Display: 2.4″, 2.8″ or 3.5″ TFT full color touch screen.
Display Resolution: 320 x 240 pixels.
Sampling Rate: 3 samples/s.
Temperature Limits: 32 to 104°F (0 to 40°C).
Warm Up: 30 s.
Mounting: Panel mount.
Electrical Connection: Screw terminals, pin connection, or USB.
Computer Requirements: Compatible with Windows® 7, Windows® 8 and Windows® 10.
Weight: 2.8 oz (79.4 g).
Compliance: CE.

SPPM-HSG SPECIFICATIONS
Service: Indoor or outdoor.
Material: Painted aluminum or glass.
Enclosure Rating: NEMA 4X (IP66).

A-SPPM-TC SPECIFICATIONS
Probe Measurement Range:
K-type: -328 to 2462°F (-200 to 1350°C);
J-type: -328 to 2174°F (-200 to 1190°C);
T-type: -328 to 734°F (-200 to 390°C).
Temperature Limits: 14 to 104°F (-10 to 40°C).
Resolution: 1.0°F (0.5°C).
Power Requirements: Powered by USB port through SPPM panel meter.
Accuracy: ±2.0°F (±1.0°C).
Weight: 0.9 oz (25.5 g).
Compliance: CE.

MODEL CHART

Model	Display	Input
SPPM-24	2.4″	Voltage
SPPM-28	2.8″	Voltage
SPPM-35	3.5″	Voltage
SPPM-24-C	2.4″	Current
SPPM-28-C	2.8″	Current
SPPM-35-C	3.5″	Current

ACCESSORIES

Model	Description
A-SPPM-TC	Thermocouple input board
SPPM-CA	Mini USB to full USB cable
SPPM-HSG24	2.4″ display housing
SPPM-HSG28	2.8″ display housing
Note: Additional configurations available via online software.	

Windows® is a registered trademark of Microsoft Corporation

Dwyer

SERIES DPMA, DPMW, DPMP, & DPML

LCD DIGITAL PANEL METERS

3-1/2 and 4-1/2 Digit LCD, User Selectable Engineering Units, Panel Mount

DPMA

DPMW

DPMP

DPML

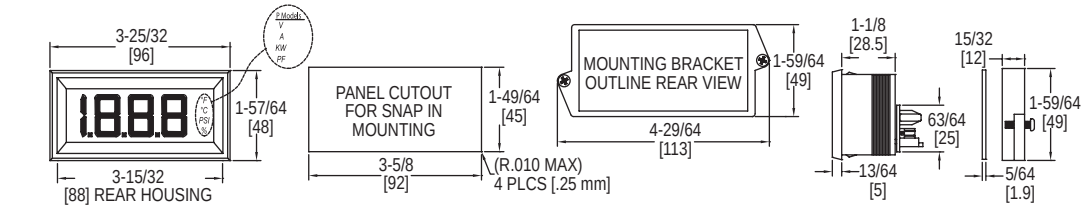

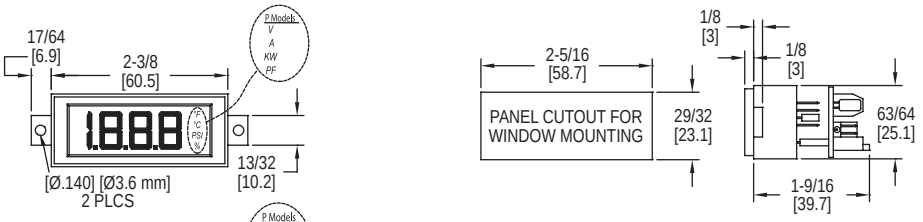

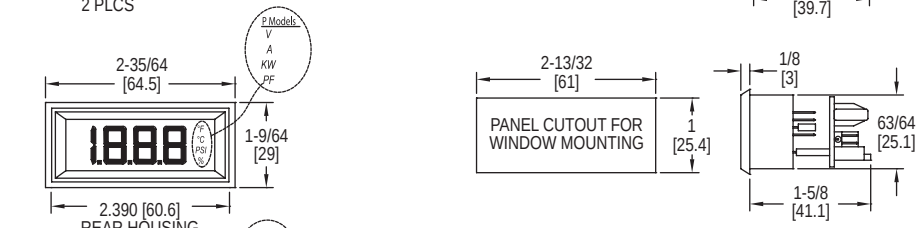

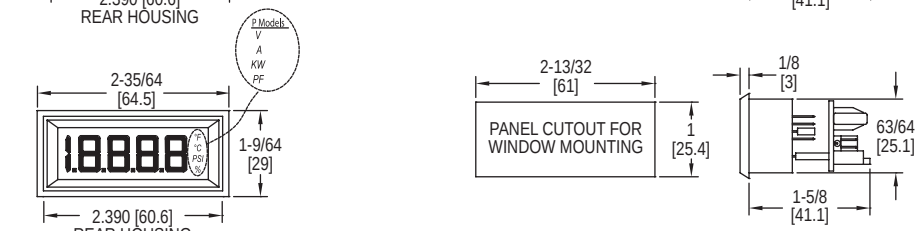

The **Series DPMA, DPMW, DPMP, & DPML LCD Digital Panel Meters** provide easy viewing on the 3-1/2 or 4-1/2 digit LCD display. On the DPMP and DPML the snap-in bezel mount eliminates mounting hardware for quick installation. The DPMA has a high contrast display for easy viewing in a standard 1/8 DIN package. The DPMW window mounts using two screws to sit flush within the panel cutout. This series can accept 4-20 mA, 0-200 mVDC, 0-5 VDC, or 0-10 VDC input signal and requires a 24 VDC power supply to illuminate the colored segments.

BENEFITS/FEATURES

- Panel mount for quick installation
- 3-1/2 or 4-1/2 digit with 0.45″ or 1″ segments
- Colored segments available in black, red, amber, green, or blue
- Jumper selectable engineering units and decimal point positions

APPLICATIONS

- Display process values from pressure, humidity, temperature, voltage, current, watt, or power factor transmitters

SPECIFICATIONS

Input: DPMX-4XX(P): 4-20 mA; DPMX-5XX(P): 0-200 mVDC, 0-5 VDC, or 0-10 VDC.
Input Impedance: DPMX-4XX(P): 300Ω nominal; DPMX-5XX(P): 390Ω nominal.
Accuracy: DPMA: ±(0.05% FS + 1 count); DPMW/P/L: ±(0.1% FS + 2 count).
Power Supply: DPMX-4XX(P): Powered by control loop; DPMX-5XX(P): 12 VDC or 24 VDC.
Backlight Power Supply: 24 VDC @ 35 mA typical.
Span and Zero: Adjustable (±1999 counts).
Display: DPMA: 3-1/2 digits, 7 segments, 1″ (25.4 mm) H; DPMP/W: 3-1/2 digits, 7 segments, 0.45″ (11.4 mm) H; DPML: 4-1/2 digits, 7 segments, 0.45″ (11.4 mm) H.
Decimal Points: DPMA/W/P: 3-position, user selectable; DPML: 4-position, user selectable.
Polarity: Automatic, "-" displayed.
Operating Temperature: 32 to 122°F (0 to 50°C).
Storage Temperature: -4 to 158°F (-20 to 70°C).
Mounting: DPMA: Snap-in panel mount or clamp (gasket included); DPMW: Window mount; DPMP/L: Snap-in bezel mount.
Connection: Screw terminals.
Conversion Rate: 3 per s.
Warm-Up: 10 minutes typical.
Weight: DPMA: 4 oz (113.4 g); DPMW/P/L: 2 oz (56.7 g).

ACCESSORIES

Model	Description
DPM-12P	Regulated 120 VAC to 12 VDC power supply
DPM-24P	Regulated 120 VAC to 24 VDC power supply

MODEL CHART

Model	Input	Segments	Engineering Units	Digits	Model	Input	Segments	Engineering Units	Digits
DPMA-401	Current	Amber	°F, °C, %, psi	3-1/2	**DPMW-401P**	Current	Amber	V, A, KW, PF	3-1/2
DPMA-402	Current	Red	°F, °C, %, psi	3-1/2	**DPMW-402P**	Current	Green	V, A, KW, PF	3-1/2
DPMA-404	Current	Green	°F, °C, %, psi	3-1/2	**DPMW-403P**	Current	Red	V, A, KW, PF	3-1/2
DPMA-501	Voltage	Amber	°F, °C, %, psi	3-1/2	**DPMP-401***	Current	Amber	°F, °C, %, psi	3-1/2
DPMA-502	Voltage	Red	°F, °C, %, psi	3-1/2	**DPMP-402***	Current	Green	°F, °C, %, psi	3-1/2
DPMA-504	Voltage	Green	°F, °C, %, psi	3-1/2	**DPMP-403***	Current	Red	°F, °C, %, psi	3-1/2
DPMA-401P	Current	Amber	V, A, KW, PF	3-1/2	**DPMP-501***	Voltage	Amber	°F, °C, %, psi	3-1/2
DPMA-402P	Current	Red	V, A, KW, PF	3-1/2	**DPMP-502***	Voltage	Green	°F, °C, %, psi	3-1/2
DPMA-404P	Current	Green	V, A, KW, PF	3-1/2	**DPMP-503***	Voltage	Red	°F, °C, %, psi	3-1/2
DPMA-501P	Voltage	Amber	V, A, KW, PF	3-1/2	**DPMP-401P***	Current	Amber	V, A, KW, PF	3-1/2
DPMA-502P	Voltage	Red	V, A, KW, PF	3-1/2	**DPMP-402P***	Current	Green	V, A, KW, PF	3-1/2
DPMA-504P	Voltage	Green	V, A, KW, PF	3-1/2	**DPMP-403P***	Current	Red	V, A, KW, PF	3-1/2
DPMW-401	Current	Amber	°F, °C, %, psi	3-1/2	**DPMP-501P***	Voltage	Amber	V, A, KW, PF	3-1/2
DPMW-402	Current	Green	°F, °C, %, psi	3-1/2	**DPMP-502P***	Voltage	Green	V, A, KW, PF	3-1/2
DPMW-403	Current	Red	°F, °C, %, psi	3-1/2	**DPMP-503P***	Voltage	Red	V, A, KW, PF	3-1/2

***For 4-1/2 digit display, change DPMP to DPML. **Example:** DPML-401

Dwyer

SERIES DPMX

EXTRA LARGE DIGITAL PANEL METER

3-1/2 Digit LED Display, 2.3″ Segment Height, Process Inputs

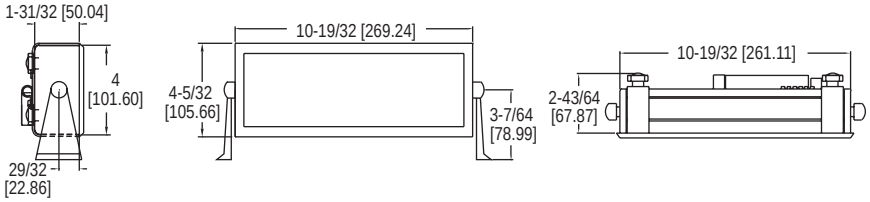

The **Series DPMX Extra Large Digital Panel Meter** can be easily viewed from across a room or in dark areas. The 2.3″ LED segments are available in red, green, or blue. These panel meters come equipped with a universal power supply and user selectable process inputs to fit most applications.

BENEFITS/FEATURES
- Large 10.6″ (269.2 mm) x 4.2″ (105.7 mm) backlit display
- Protective metal casing with adjustable mounting bracket

APPLICATIONS
- Display process values from various transmitters

MODEL CHART

Model	Segments	Power Supply
DPMX-1	Blue	90-250 VAC
DPMX-2	Green	90-250 VAC
DPMX-3	Red	90-250 VAC
DPMX-1-LV	Blue	10.5-30 VAC/VDC
DPMX-2-LV	Green	10.5-30 VAC/VDC
DPMX-3-LV	Red	10.5-30 VAC/VDC

SPECIFICATIONS

Inputs: Set voltage: ±200 mVDC, ±2 VDC, ±20 VDC; Adjustable voltage: 200 mVDC, 5 VDC, 10 VDC; Adjustable current: 0(4)-20 mA DC.
Input Impedance: Set voltage: >1 M Ω (>10 M Ω on 200 mV range); Adjustable voltage: 392 kΩ; Adjustable current: 300 Ω nominal.
Accuracy: ±(1% FS + 1 count).
Power Supply: 90-250 VAC @ 12 VA or 10.5-30 VAC/DC @ 6 VA (depending on model).
Display: 3-1/2 digits, 2.3″ H, 7 segment LED.
Sampling Rate: 3 readings per s.
Operating Temperature: 14 to 122°F (-10 to 50°C).
Storage Range: -40 to 167°F (-40 to 75°C).
Warm Up: 10 minutes.
Mounting: 180° gimbal mounting with 30° stops or bezel mount.

SERIES LCI132

COMPACT PROCESS INDICATOR

1/32 DIN, Fully Programmable

Process display

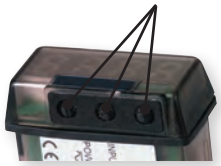

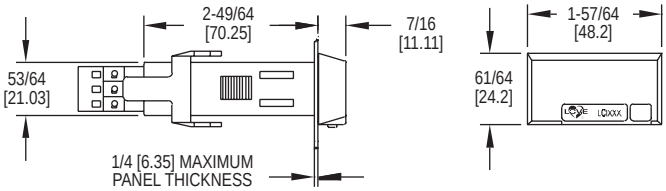

The **Series LCI132 Compact Process Indicator** offers flexibility and value in a low cost, compact 1/32 DIN package. The shallow depth of these full size panel meters allows installation in panels only 2.76″ (70 mm) deep with room to spare.

BENEFITS/FEATURES
- Fits in 1/32 DIN panel cutouts
- IP65 (NEMA 4X) front housing
- Fully programmable
- Various voltage and current inputs fit most processes

APPLICATIONS
- Display process values from various transmitters

MODEL CHART

Model	Input	Supply Voltage
LCI132-00	±100 VDC; ±20 VDC; ±10 VDC; ±200 VDC; ±20 mA DC	120/240 VAC
LCI132-01	±100 VDC; ±20 VDC; ±10 VDC; ±200 VDC; ±20 mA DC	24/48 VAC
LCI132-10	±100 VAC; 600 VAC; 5 A (DC) 1A (AC); -199.9 to +600 VDC; ±100 VDC -1.999 to 5 A (DC) ±1 A (DC)	120/240 VAC
LCI132-11	±100 VAC; 600 VAC; 5 A (DC) 1 A (AC); -199.9 to +600 VDC; ±100 VDC -1.999 to 5 A (DC) ±1 A (DC)	24/48 VAC

SPECIFICATIONS

LCI132-0X
Range: Input volts (DC): ±200 V, ±20 V, ±10 V; Input amperes: ±100 mV, ±20 mA.
Resolution: Input volts (DC): 0.1 V, 0.01 V, 1 mV; Input amperes: 0.1 mV, 0.01 mA; Input impedance: Volts: 1 MΩ, mV: 100 MΩ, mA: 12.1 Ω.

LCI132-1X
Range AC: Input volts: 600.0, 100.0; Input amperes: 5.000, 1.000.
Range DC: Input volts: -199.9, ±600.0, ±100.0; Input amperes: -1.999, +5.000, ±1.000.
Resolution: Input volts: 0.1 V; Input amperes: 1 mA; Input impedance: Volts: 3 M Ω (106), Amps: 12 m Ω (10-3).
Accuracy at 23ºC ±5ºC: 100/600 VDC 1/5 A DC; 600 V/5 A AC: ±(0.2% reading + 3 digits). 100 V / 1 A AC: ±(0.4% reading + 4 digits).
Temperature Coefficient: 100 PPM/°C.
Warm Up: 5 minutes.
Power Supply and Fuses (DIN 41661) (Not supplied): LCI132-X0: 85–265 VAC 50/60 Hz and 100-300 VDC: Fuse: 0.1 A/ 250 V; LCI132-X1: 21-53 VAC 50/60 Hz and 10.5-70 VDC: Fuse 0.5 A/ 250 V.

DISPLAY
Range: -1999 to 9999 (DC) 0 to 9999 (AC).
Type: 4 red digits 10 mm.
Reading Rate: 4/s.
Overflow Indication: OVR.

ENVIRONMENTAL
Operating Temperature: 14 to 140°F (-10 to 60°C).
Storage Temperature: -13 to 185°F (-25 to 85°C).
Relative Humidity (non condensed): < 95% @ 40°C.
Panel Sealing: NEMA 4X (IP66).

Dwyer

SERIES APM, MPM & PPM

DUAL LINE CONFIGURABLE PANEL METERS

1/8 DIN Process and Flow / Rate Totalizers

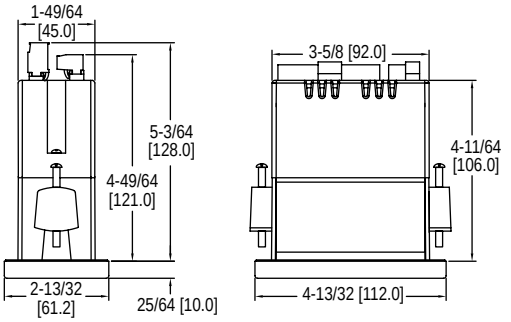

These 1/8 DIN digital panel meters accept signals from various transmitters and flowmeters and displays them on a six-digit, dual line display in engineering units. These meters will also provide power to the field device and include a NEMA 4X front panel. Free, USB based programming software is resident on the meter. Options include up to four relays and a 4-20 mA output.

The **Series MPM Dual Line Configurable Panel Meter** is a general purpose process meter that is field selectable for a 4-20 mA or 0-10 V input signal. It provides 24 VDC to power the transmitter. The dual line display can display the process variable on the upper line and engineering units on the lower line. Or, in dual scale mode, the process variable can be displayed in one units (like height) on the upper display and another (like volume) on the lower display. The meter also has an automatic Round Horizontal Tank function a well as 32 point linearization.

The **Series APM Dual Line Configurable Panel Meter** and **Series PPM Dual Line Configurable Panel Meter** are flow / rate totalizers for analog or pulse inputs. The most useful feature of these products is their dual line display which allows rate and total to be displayed at the same time. A non-resetable grand total can also be programmed. Total can be reset either from the front panel or by connecting a remote switch to the F4 terminal at the rear of the meter. The Series APM accepts either a 4-20 mA or 0-10 V input signal and provides the 24 VDC to power the flowmeter. Other features of the APM include square root extraction for DP flow, and programmable exponents for open channel flow. The Series PPM accepts a pulse input signal and provides either 5, 10 or 24 VDC to power the flowmeter. Adding the 4-20 mA output option converts the pulse into a signal that can be run long distances to a PLC or other device.

BENEFITS/FEATURES

- NEMA 4X / IP65 front panel
- Powers the transmitter / flowmeter
- Dual line 6 digit display
- Free USB based programming software
- Display rate and total at the same time
- Two or four relays and isolated 4-20 mA output options

APPLICATIONS

- Level monitoring
- Pump control
- Flow rate indication
- Flow totalization
- Open channel flow monitoring
- Process control

MODEL CHART

Model	Model	Model	Power	Output 1	Output 2
APM-100	**MPM-100**	**PPM-100**	85-265 VAC	None	None
APM-101	**MPM-101**	**PPM-101**	85-265 VAC	None	4-20 mA
APM-120	**MPM-120**	**PPM-120**	85-265 VAC	2 relays	None
APM-121	**MPM-121**	**PPM-121**	85-265 VAC	2 relays	4-20 mA
APM-140	**MPM-140**	**PPM-140**	85-265 VAC	4 relays	None
APM-141	**MPM-141**	**PPM-141**	85-265 VAC	4 relays	4-20 mA
APM-200	**MPM-200**	**PPM-200**	12-24 VDC	None	None
APM-201	**MPM-201**	**PPM-201**	12-24 VDC	None	4-20 mA
APM-220	**MPM-220**	**PPM-220**	12-24 VDC	2 relays	None
APM-221	**MPM-221**	**PPM-221**	12-24 VDC	2 relays	4-20 mA
APM-240	**MPM-240**	**PPM-240**	12-24 VDC	4 relays	None
APM-241	**MPM-241**	**PPM-241**	12-24 VDC	4 relays	4-20 mA

SPECIFICATIONS

Input: APM and MPM: 0-20 mA, 4-20 mA, 0-5 V, or ±10 V inputs; PPM: Field selectable: Pulse or square wave 0-5 V, 0-12 V, or 0-24 V @ 30 kHz; TTL; open collector 4.7 k Ω pull-up to 5 V @ 30 kHz; NPN or PNP transistor, switch contract 4.7 k Ω pull-up to 5 V @ 40 Hz. Input impedance: 50 to 100 Ω.
Accuracy: ±0.03% of calibrated span ±1 count.
Display: Red LED, Dual-line 6-digit display, 0.60 in and 0.46 in.
Transmitter / Flowmeter Power: 85-265 VAC models: 200 mA @ 24 VDC; 12-24 VDC models: 100 mA @ 24 VDC; Second supply with 4-20 mA output models: 40 mA @ 24 VDC.
Power Requirements: 85-265 VAC 50/60 Hz, 90-265 VDC, 20 W max or 12-24 VDC ±10%, 15 W max.
Temperature Limits: Operating: -40 to 149°F (-40 to 65°C); Storage: -40 to 185°F (-40 to 85°C).
Front Panel: NEMA 4X, IP65 front.
Output Signal (Option): Isolated 4-20 mA.
Switch Rating (Option): 2 or 4 SPDT (Form C) internal and/or 4 SPST (Form A) external; rated 3 A @ 30 VDC and 125/250 VAC resistive load; 1/14 HP @ 125/250 VAC for inductive loads.
Time Delay: 0 to 999.9 s, on and off relay time delays; programmable and independent for each relay.
Shipping Weight: 9.5 oz (269 g).
Compliance: CE, UL.
Programming Software: Free, USB based. Resident on meter, nothing to download.

FREE USB PROGRAMMING SOFTWARE AND CABLE

The PM Series meters come preloaded with free programming software that connects and installs directly to your PC with a standard USB cable, also provided free with each instrument. This eliminates the need to insert CDs, install drivers, or download software from the internet. The software will allow you to configure, monitor, and datalog a PM Series meter using your PC. Just simply connect the meter to your PC with the USB cable and within seconds you will be programming it.

UNIQUE LEVEL MONITORING CAPABILITIES

The MPM meter is particularly well suited for level monitoring, controlling and alarming applications. For instance, the meter can be programmed to display any two of these parameters on its dual line display: height, volume or percent full. Its six digit display allows it to display volumes up to 999,999 gallons, liters, or any other volume. The meter also has a Round Horizontal Tank function which requires the user to enter only the height and length of a round horizontal tank and the meter will display in volume. Up to four relays are available for alarm and control applications, and the relays can even be programmed to alternate for pump control applications.

ACCESSORIES

Model	Description
PMA-01	RS-232 serial adaptor
PMA-03	RS-422/485 serial adaptor
PMA-04	RS-232 to RS-422/485 isolated converter
PMA-05	RS-232 to RS-422/485 non-isolated converter
PMA-07	USB to RS-422/485 isolated converter
PMA-08	USB to RS-422/485 non-isolated converter
PMA-09	Snubber
PMA-10	DIN rail mounting kit for two modules
PMA-11	4 relay expansion module
PMA-12	4 digital inputs and 4 digital outputs module

SERIES SC1

PROCESS/TEMPERATURE ALARM SWITCH MODULE

Two Form C (SPDT) Switches, Small Size, Mounts Easily on 35 mm DIN Rail

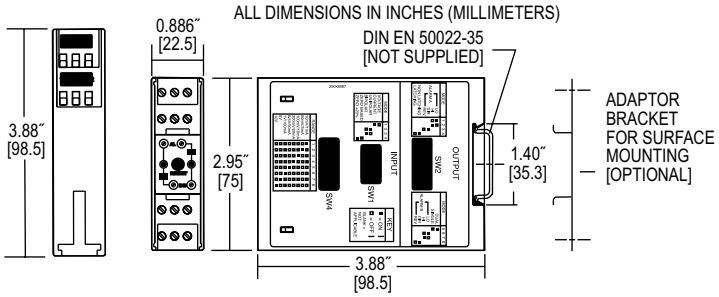

The **Series SC1 Process/Temperature Alarm Switch Module** is an on-off or limit switch with selectable process signal. Each unit has two form C (SPDT relays which can operate independently, or be logically connected to operate as a DPDT output.

BENEFITS/FEATURES
- Accepts current, voltage, thermocouple, or RTD inputs
- Mounts on standard 35 mm DIN rail
- Two color LED indicator to indicate the status of each output relay
- Programmable input type, scale range, output action, and output type

APPLICATIONS
- Stand alone CO monitoring in parking garage
- Industrial processing equipment

MODEL CHART

Model	Description	Power Supply
SC1090	4-20 mA, 10-50 mA, 0-20 mA, 0-10 V, -10-10 mV	85-265 VDC/VAC
SC1290	Thermocouple type J, K, R, S, T, E RTD Pt1000 4-20	85-265 VDC/VAC
SCL1090	mA, 10-50 mA, 0-20 mA, 0-10 V, -10 to 10 mV	12-24 VDC/VAC
SCL1290	Thermocouple type J, K, R, S, T, E	12-24 VDC/VAC

ACCESSORIES

Model	Description
A-360	Aluminum DIN rail 1 m

SPECIFICATIONS

Input: See table.
Power Supply: SC models: 85-265 VDC/VAC, 50 to 400 Hz; SCL models: 12-24 VDC/VAC, 50 to 400 Hz.
Isolation: 1500V rms between outputs, input, and power.
Set Points: Adjustable 0 to 100% of span.
Deadband: Adjustable 0.25% to 100% of span.
Drift: ±0.02%/°C typical ±0.05%/°C maximum.
Ambient Temperature Range: Operating: 32 to 131°F (0 to 55°C); Storage: -40 to 176°F (-40 to 80°C).
Excitation Current: Cu10 Ω = 5 mA; Plt 100 Ω, Ni 100 Ω, Ni 120 Ω = 500 µA; Plt 500 Ω, NiFe 1000 Ω = 100 µA; Plt 1000 Ω = 50 µA.
Lead Compensation Error: ≈ 0.02%/Ω.
Open Lead Protection: Upscale only.
Input Impedance: SC1090: Voltage input = 1 MΩ, current input = 10 Ω; SC1290: 3 MΩ.
Sensor Burnout Protection: Selectable.
Relay Output: Form C, SPDT, one per set point, 5A @ 250 VAC, resistive.
Latch Circuit Reset: Automatic at power up. Manual with reset switch on front of module.
Indicators: One dual color LED per set point. Red = relay on, green = relay off.
Wiring Terminals: Screw driven compression type.

SERIES AN2

INDICATING ALARM ANNUNCIATOR

Up to 8 Inputs, Integral Power Supply

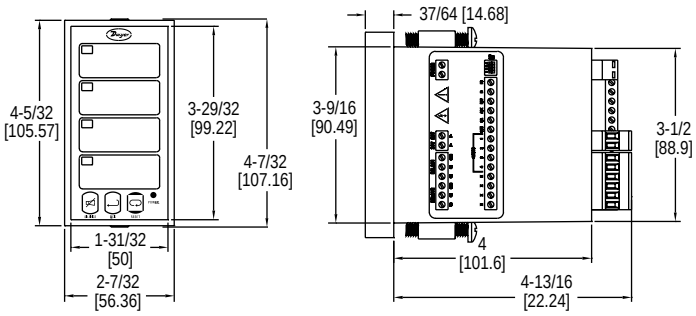

The **Series AN2 Indicating Alarm Annunciator** provides visible and audible alarms for up to eight inputs. Audible alarm conditions can be acknowledged, reset, or silenced either via the front panel push-buttons or the rear terminal block. The annunciator also has two SPDT relay outputs that can be used to initiate external alarms, buzzers, or paging devices.

BENEFITS/FEATURES
- Includes integral 24 VDC power supply to power most switches
- Can be set to any common ISA sequences

APPLICATIONS
- Water and wastewater panels
- Tank level monitoring
- Temperature monitoring process

MODEL CHART

Model	Number of Outputs	Power Supply
AN24-1	4	85-265 VAC
AN24-2	4	12-36 VDC
AN28-1	8	85-265 VAC
AN28-2	8	12-36 VDC

SPECIFICATIONS

Inputs: NO or NC switches, open collector transistor (open circuit voltage = 3.3 VDC); Logic levels: LO = 0-0.9 VDC, HI = 2.4-28 VDC (100 KΩ input impedance).
Outputs: Two SPDT relay (3 A @ 250 VAC or 30 VDC, resistive; 1/14 HP @ 125/250 VAC, inductive).
Temperature Limits: -40 to 149°F (-40 to 65°C).
Power Requirements: 85-265 VAC 50/60 Hz, 90-265 VDC; 12-36 VDC, 12-24 VAC (depending on model).
Power Consumption: 20 W (6 W on low voltage models).
Mounting: 1/8 DIN.
Housing Material: UL rated 94V-0 high impact plastic.
Enclosure Rating: NEMA 4X (IP66) front panel.
Weight: 9.6 oz (272 g).
Compliance: CE, UL.

Dwyer

SERIES 9

ELECTROMECHANICAL RELAYS

30 Amp, SPDT and DPDT Operation

SPDT

DPDT

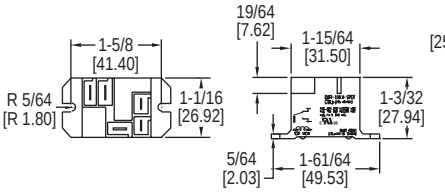

SPDT

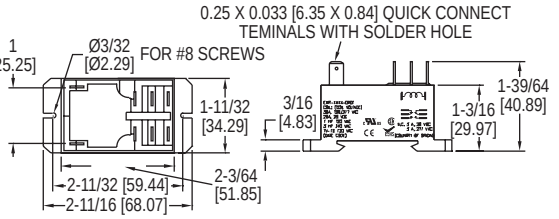

DPDT

The **Series 9 Electromechanical Relays** are small in size, features Class F insulation for a max coil temperature of 155°C, quick-connect terminals for simple connection, and is panel mountable. The relays are compact and impervious to shock and vibration.

BENEFITS/FEATURES
- Easy installation using quick connect terminals and panel mountable design
- Reliable construction is impervious to shock and vibration

APPLICATIONS
- Motor control
- Lighting control
- Refrigeration compressor systems

MODEL CHART

Model	Operation	Input Voltage	Coil Resistance
9AS5A5224	AC	24 VAC 50/60 Hz	500 Ω
9AS5A52120	AC	120 VAC 50/60 Hz	3000 Ω
92S11A22D24	AC	24 VAC 50/60 Hz	250 Ω
9AS5D5224	DC	24 VDC	576 Ω
92S11D22D12	DC	12 VDC	86 Ω
92S11D22D24	DC	24 VDC	1600 Ω

SPECIFICATIONS

Operating and Load Voltage Range: 12-277 VAC; 5-110 VDC.
Electrical Connection: Quick-connect tab terminals. SPDT 0.187″ coil terminal/0.25″ contact terminal; DPDT 0.25″ coil terminal/0.25″ contact terminal.
Switching Operation: SPDT or DPDT.
Electrical Rating: SPDT: NO 30 A @ 240 VAC / 28 VDC; NC 10 A @ 240 VAC / 28 VDC; DPDT: 30 A @ 240 VAC 20 A @ 28 VDC.
Temperature Limits: Storage: -40 to 185°F (-40 to 85°C); Operation: -40 to 131°F (-40 to 55°C).
Voltage Loss: 2.5 VA (VAC); 1W (VDC).
Cycle Life: 100,000 cycles (electrical); 10,000,000 cycles (mechanical).
Housing: Polyester resin.
Weight: 1.16 oz (45 g) (SPDT); 3 oz (85 g) (DPDT).
Agency Approvals: CE, cULus, (EMR-XXXX-DPDT), cURus (EMR-XXXX-SPDT).

ACCESSORIES

Model	Description
16-9ADIN1	Din adaptor
A-360	Aluminum DIN rail 1 m

SERIES 781 & 782

ICE CUBE RELAYS

SPDT or DPDT Operation

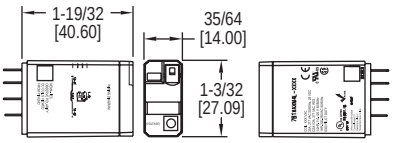

781

Pictures shown with socket accessory (sold separately)

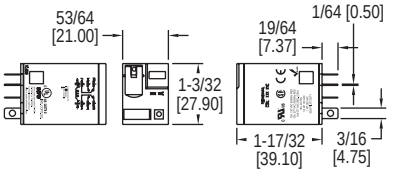

782

The **Series 781 & 782 Ice Cube Relays** are full-featured relays that can be used to handle loads up to 15 amps for AC or DC circuits. It features a flag status indicator and a LED status lamp to let the user know when the relay is activated. In order to differentiate between AC and DC actuated models, the push-to-test button is color coded and a removable lock-down lever holds the test button in place.

BENEFITS/FEATURES
- Clear plastic housing to easily view the contacts
- Flag and LED status indicators for visual confirmation of relay state
- Socket mounted for quick installation/replacement

APPLICATIONS
- Refrigeration compressor systems
- HVAC motor controls
- Water/wastewater pump control

SPECIFICATIONS

Operating and Load Voltage Range: 24-240 VAC; 24 VDC.
Electrical Connection: Silver alloy plug-in contacts.
Switching Operation: SPDT or DPDT.
Electrical Rating: Depends on model, see model chart.
Temperature Limits: Storage: -40 to 185°F (-40 to 85°C); Operation: -40 to 131°F (-40 to 55°C).
Power Consumption: 781: 0.9 VA; 0.7W; 782: 1.2 VA; 0.9W.
Cycle Life: 100,000 cycles (electrical); 10,000,000 cycles (mechanical).
Housing: Plastic polycarbonate.
Weight: 781: 1.02 oz (29 g); 782: 1.3 oz (36 g).
Agency Approvals: CE, CSA, cULus, cURus.

MODEL CHART

Model	Operation	Input Voltage	Coil Resistance	Electrical Rating
781XAXRM4L-24A	AC	24 VAC 50/60 Hz	180 Ω	15 A @ 277 VAC (50/60 Hz) or 28 VDC
781XAXRM4L-120A	AC	120 VAC 50/60 Hz	4430 Ω	15 A @ 277 VAC (50/60 Hz) or 28 VDC
781XAXRM4L-240A	AC	240 VAC 50/60 Hz	15720 Ω	15 A @ 277 VAC (50/60 Hz) or 28 VDC
781XAXRM4L-24D	DC	24 VDC	750 Ω	15 A @ 277 VAC (50/60 Hz) or 28 VDC
782XBXM4L-24A	AC	24 VAC 50/60 Hz	180 Ω	15 A @ 120 VAC 50/60 Hz; 12 A @ 277 VAC 50/60 Hz or 28 VDC (UL); 10 A @ 277 VAC 50/60 Hz (CSA)
782XBXM4L-120A	AC	120 VAC 50/60 Hz	4430 Ω	15 A @ 120 VAC 50/60 Hz; 12 A @ 277 VAC 50/60 Hz or 28 VDC (UL); 10 A @ 277 VAC 50/60 Hz (CSA)
782XBXM4L-240A	AC	240 VAC 50/60 Hz	15720 Ω	15 A @ 120 VAC 50/60 Hz; 12 A @ 277 VAC 50/60 Hz or 28 VDC (UL); 10 A @ 277 VAC 50/60 Hz (CSA)
782XBXM4L-24D	DC	24 VDC	650 Ω	15 A @ 120 VAC 50/60 Hz; 12 A @ 277 VAC 50/60 Hz or 28 VDC (UL); 10 A @ 277 VAC 50/60 Hz (CSA)

ACCESSORIES

Model	Description
70-781D5-1A	Socket for 781 series relay
70-782D8-1A	Socket for 782 series relay

ICE CUBE RELAYS

3PDT or 4PDT Operation

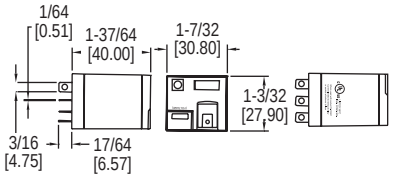

783

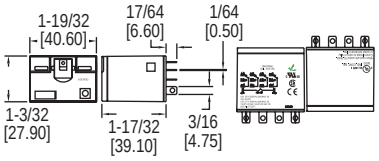

784

Pictures shown with socket accessory (sold separately)

The **Series 783 & 784 Ice Cube Relays** are full-featured relays that can be used to handle loads up to 15 amps for AC or DC circuits. It features a flag status indicator and a LED status lamp to let the user know when the relay is activated. In order to differentiate between AC and DC actuated models, the push-to-test button is color coded and a removable lock-down lever holds the test button in place.

BENEFITS/FEATURES

- Quick installation and replacement using socket mounting
- Simplified diagnosis with flag and LED status indicators and color-coded push-to-test button

APPLICATIONS

- Refrigeration compressor systems
- HVAC motor controls
- Water/wastewater pump control

SPECIFICATIONS

Operating and Load Voltage Range: 24-240 VAC; 24 VDC.
Electrical Connection: Silver alloy plug-in contacts.
Switching Operation: 3PDT or 4PDT.
Electrical Rating: 15 A @ 120 VAC 50/60 Hz; 12 A @ 277 VAC 50/60 Hz or 28 VDC.
Temperature Limits: Storage: -40 to 185°F (-40 to 85°C); Operation: -40 to 131°F (-40 to 55°C).
Power Consumption: 783: 1.5 VA; 1.4 W; 784: 1.5 VA; 1.5 W.
Cycle Life: 100,000 cycles (electrical); 10,000,000 cycles (mechanical).
Housing: Plastic polycarbonate.
Weight: 783: 2.1 oz (60 g); 784: 2.8 oz (80 g).
Agency Approvals: CE, CSA, cULus, cURus.

MODEL CHART

Model	Operation	Input Voltage	Coil Resistance
783XCXM4L-24A	AC	24 VAC 50/60 Hz	103 Ω
783XCXM4L-120A	AC	120 VAC 50/60 Hz	2770 Ω
783XCXM4L-24D	DC	24 VDC	400 Ω
784XDXM4L-24A	AC	24 VAC 50/60 Hz	84.5 Ω
784XDXM4L-120A	AC	120 VAC 50/60 Hz	2220 Ω
784XDXM4L-24D	DC	24 VDC	388 Ω

ACCESSORIES

Model	Description
70-784D14-1	Socket for 784 series relay
70-ASMM-24	Protection modules, MOV suppressor, 24 VAC/VDC
70-ASMM-120	Protection modules, MOV suppressor, 120 VAC/VDC
70-ASMD-250	Protection modules, protection diode, 6 to 250 VDC

Dwyer

SERIES SCS

CURRENT SWITCHES

Optional Relay Output, Solid or Split Core Case

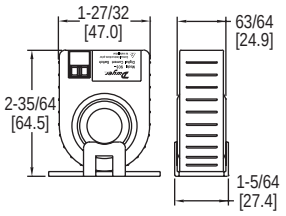

SCS-111100 and SCS-120025

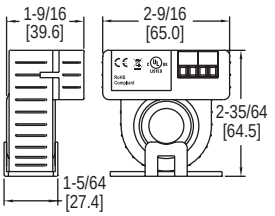

SCS-111100-R

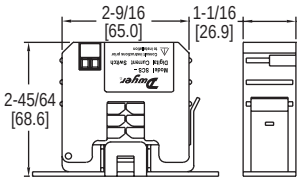

SCS-220015, SCS-220150, and SCS-211125

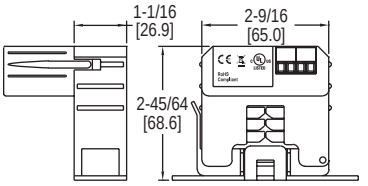

SCS-220150-R and SCS-211125-R

The **Series SCS Current Switches** are ideal for monitoring whether fans, pumps, or motors are operating. The current flowing through the core of the device powers the circuit without an external power supply. All models have a built in solid state output and are easy to install. Optional LED's and 10 Amp relay modules are available. The Series SCS is available in both split and solid core configurations.

BENEFITS/FEATURES

- Integral mounting flange for quick installation
- Solid core or split core configurations

APPLICATIONS

- BAS
- HVAC

SPECIFICATIONS

Output: Isolated, 1 A @ 30 VAC/DC max, NO.
External Relay: SPST N.O., 10 A at 260 VAC (5 A at 30 VDC).
Power Requirements: None, self-powered.
Temperature Limits: 5 to 140°F (-15 to 60°C).
Isolation Voltage: 600 VAC RMS.
Frequency: 50/60 Hz.
Enclosure Rating: UL, 94 V-0 flammability rated, ABS plastic housing.
Agency Approvals: CE, cULus.

MODEL CHART

Model	Case	Amperage Range	Set Point	Switch Mode	Snap-on Relay	Model	Case	Amperage Range	Set Point	Switch Mode	Snap-on Relay
SCS-120025	Solid	.25 to 200 A	0.25 fixed	Under	No	**SCS-220150**	Split	1.5 to 200 A	1.5 fixed	Under	No
SCS-111100	Solid	1 to 135 A	Adjustable	Over/under	No	**SCS-211125**	Split	1.25 to 135 A	Adjustable	Over/under	No
SCS-111100-R	Solid	1 to 135 A	Adjustable	Over/under	Yes	**SCS-220150-R**	Split	1.5 to 200 A	1.5 fixed	Under	Yes
SCS-220015	Split	.15 to 200 A	0.15 fixed	Under	No	**SCS-211125-R**	Split	1.25 to 135 A	Adjustable	Over/under	Yes

Dwyer

SERIES MCS

MINIATURE CURRENT SWITCHES

Low Cost, Solid or No Core, LED Confirmation, Adjustable Set Point

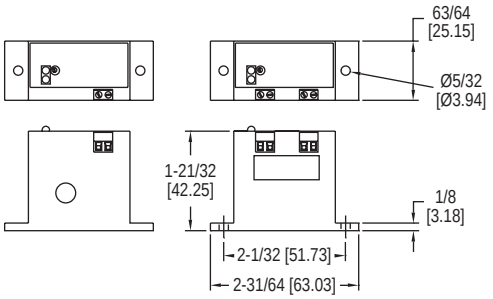

Solid core No core

The **Series MCS Miniature Current Switches** are ideal for monitoring the current usage in fuse boxes and small control panels. Both models have adjustable set points and LED indication to show there is power to the unit and when the switch activates. Set points can be adjusted using the potentiometer next to the LED's. Due to the size of the switch, it is only offered in solid core and no core versions. The no core version has terminal blocks which can accept currents up to 1 A directly into the unit.

BENEFITS/FEATURES
- Integral mounting flange for quick installation
- Compact size fits in any space

APPLICATIONS
- BAS
- HVAC

SPECIFICATIONS

Amperage Range: MCS-111050: 0.5 to 50 A AC continuous; MCS-111001: 0.01 to 1 A AC continuous.
Output Rating: Isolated, N.O. 0.3 A @ 130 V DC/AC.
Power Requirements: None, self-powered.
Hysteresis: 1%.
Response Time: <200 ms.
Temperature Limits: 32 to 122°F (0 to 50°C).
Humidity Limits: 10 to 95% RH (non-condensing).
Enclosure Rating: UL 94 V-0 flammability rated ABS, insulation class 600 V.
Weight: 0.5 oz (14.5 g).
Agency Approvals: CE, cULus.

MODEL CHART

Model	Case	Set Point	Minimum Set Point	LED
MCS-111050	Solid core	Adjustable	0.50	Red/green
MCS-111001	No core (terminal connection)	Adjustable	0.01	Red/green

SERIES CCS

CURRENT SWITCHES

Solid or Split Core, LED Visual Confirmation, Fixed or Adjustable Set Point

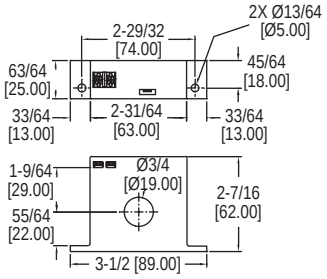

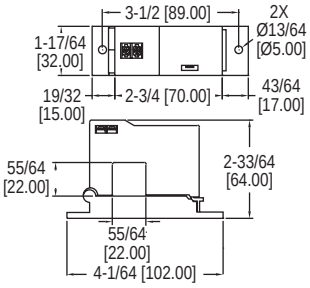

Solid Split

The **Series CCS Current Switches** are ideal for monitoring the operating status of fans, pumps, and motors. These self-powered switches can be hung or tied directly to cables or wires. For use on existing installations, split core models can be installed without disconnecting cables. LED indicators provide a visual confirmation that the current is flowing through the core. Both fixed and adjustable set points are available. The adjustable models utilize a potentiometer to easily adjust the set point.

BENEFITS/FEATURES
- Integral mounting flange for quick installation
- Solid core or split core configurations
- LED indicator
- Fixed and adjustable set points

APPLICATIONS
- Proof of installation/flow
- Monitoring
- Lighting and heating circuits
- Conveyors

SPECIFICATIONS

Amperage Range: 0 to 200 A AC.
Maximum Switch Rating: For dry contact models: 0.3 A @ 135 VAC/DC; For non-dry contact models: 1 A @ 240 VAC.
Power Requirements: None, self-powered.
Temperature Limits: -22 to 158°F (-30 to 70°C).
Humidity Limits: 0 to 95% (non-condensing).
Isolation Voltage: 2000 V.
Frequency: 40 to 400 Hz.
Enclosure Rating: UL 94 V-0 flammability rated, ABS plastic housing.
Agency Approvals: CE, cULus.

MODEL CHART

Model	Case	Set Point	Minimum Set Point (A)	LED	Dry Contact Output
CCS-121050	Solid core	Fixed	0.50 (±0.2)	Red	Yes
CCS-111100	Solid core	Adjustable	1.00 (±0.2)	Red/green	No
CCS-221100	Split core	Fixed	1.00 (±0.2)	Red	Yes
CCS-211150	Split core	Adjustable	1.50 (±0.2)	Red/green	No
CCS-131100	Solid core	Adjustable	1.00 (±0.2)	Red/green	Yes
CCS-231150	Split core	Adjustable	1.50 (±0.2)	Red/green	Yes

Dwyer

MODEL MSCS

MINIATURE CURRENT SWITCHES

Split Core, Integral Mounting Tabs

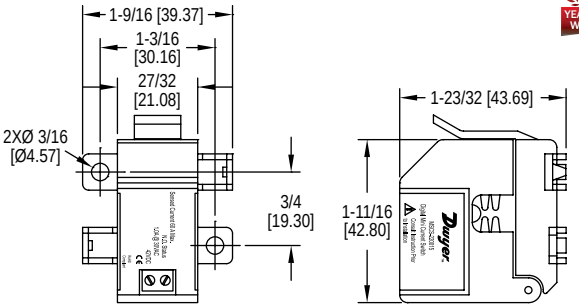

The **Model MSCS Miniature Current Switches** are low cost solutions for monitoring on and off status of light to medium current loads in compact spaces. This unit has a split core design and has a fixed set point of 0.15 amps. It is designed to detect changes in operating current to prevent motor belt loss, slippage, or mechanical failure.

BENEFITS/FEATURES
- Integral mounting flange for quick installation
- Compact size fits in any space

APPLICATIONS
- BAS
- HVAC
- Small industrial motors

MODEL CHART	
Model	**Motor Application**
MSCS-220015	Miniature split core current switch

SPECIFICATIONS

Amperage Range: 0.15 to 60 A.
Output: NO.
Power Requirements: None, self-powered.
Temperature Limits: 5 to 140°F (-15 to 60°C).
Humidity Limits: 0 to 95%, non-condensing.
Isolation Voltage: 300 VAC RMS.
Frequency: 50/60 Hz.
Enclosure Rating: UL 94 V-0 flammability rated, ABS plastic housing.
Compliance: CE, cULus.

SERIES SSCS

SURE-SET CURRENT SWITCHES

Split Core, Adjustable Set Point

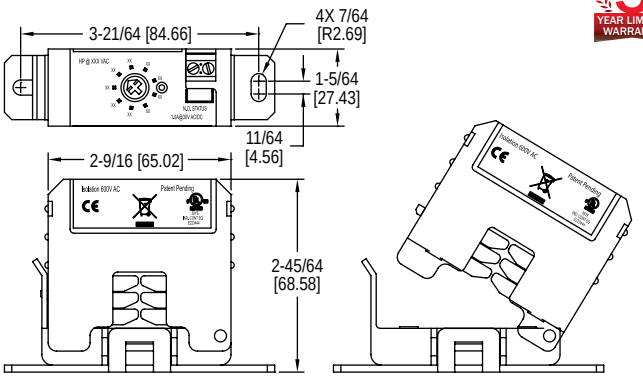

The **Series SSCS Sure-Set Current Switches** provide a unique approach to calibration and installing current sensors in a low cost, fast, and accurate design. Selecting the set point has never been easier, with each model having 9 pre-configured adjustable HP set points. This feature eliminates the need to work within a live enclosure, reducing the risk of arc flash on installation.

BENEFITS/FEATURES
- Models for 230 VAC or 480 VAC applications
- Low and high motor HP ranges available
- 9 pre-set HP set points for faster installation

APPLICATIONS
- BAS
- HVAC
- Industrial motors

SPECIFICATIONS

Output: Isolated, NO.
Power Requirements: None, self-powered.
Temperature Limits: 5 to 140°F (-15 to 60°C).
Humidity Limits: 0 to 95%, non-condensing.
Isolation Voltage: 600 VAC RMS.
Frequency: 50/60 Hz.
Enclosure Rating: UL 94 V-0 flammability rated, ABS plastic housing.
Compliance: CE, cULus.

MODEL CHART			
Model	**Case**	**Motor HP Range**	**Motor Application**
SSCS-211100-230	Split	1, 2, 3, 5, 7.5, 10, 15, 20, 25	230 VAC
SSCS-211200-480	Split	2, 3, 5, 7.5, 10, 15, 20, 25, 30	480 VAC
SSCS-211150-480	Split	15, 20, 25, 30, 40, 50, 60, 75, 100	480 VAC

Dwyer

SERIES CCT40/50

CURRENT TRANSFORMERS

Solid or Split Core, Field Selectable Range

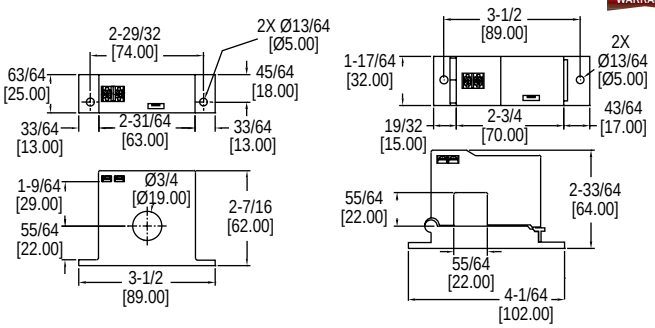

Solid **Split**

The **Series CCT40/50 Current Transformers** are a low cost alternative for measuring power and monitoring the operation of fans, pumps, or other equipment. For use on existing installations, split core models can be installed without disconnecting cables. Each model offers three jumper selectable ranges and a choice of three different outputs.

BENEFITS/FEATURES
- Integral mounting flange for quick installation
- Solid core or split core configurations
- Jumper selectable range

APPLICATIONS
- BAS
- HVAC

SPECIFICATIONS

Amperage Range: Field selectable; up to 200 A (depending on model).
Output: 0-5 V, 0-10 V, or 4-20 mA (depending on model).
Power Requirements: Self-powered or 15-42 VDC loop powered (depending on model).
Accuracy: 1%.
Temperature Limits: -22 to 158°F (-30 to 70°C).
Humidity Limits: 0 to 95% (non-condensing).
Response Time: 250 ms to 90%.
Isolation Voltage: 2000 V.
Frequency: 10 to 400 Hz.
Enclosure Rating: UL 94 V-0 flammability rated, ABS plastic housing.
Compliance: CE, cULus.

MODEL CHART

Model	Range	Output	Power Requirements	Case	Model	Range	Output	Power Requirements	Case
CCT40-202	10/20/50 A	0-5 V	Self-powered	Solid core	**CCT40-200**	10/20/50A	4-20 mA	15 to 42 VDC, loop powered	Solid core
CCT50-202	100/150/200 A	0-5 V	Self-powered	Solid core	**CCT50-200**	100/150/200A	4-20 mA	15 to 42 VDC, loop powered	Solid core
CCT40-102	10/20/50 A	0-5 V	Self-powered	Split core	**CCT40-100**	10/20/50A	4-20 mA	15 to 42 VDC, loop powered	Split core
CCT50-102	100/150/200 A	0-5 V	Self-powered	Split core	**CCT50-100**	100/150/200A	4-20 mA	15 to 42 VDC, loop powered	Split core
CCT40-203	10/20/50 A	0-10 V	Self-powered	Solid core					
CCT50-203	100/150/200 A	0-10 V	Self-powered	Solid core					

SERIES CCT60/70

TRUE RMS CURRENT TRANSFORMERS

Solid or Split Core, Field Selectable Range

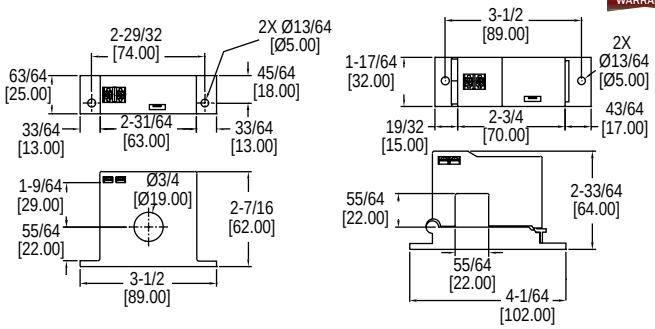

Solid **Split**

The **Series CCT60/70 True RMS Current Transformers** are a low cost alternative for providing true RMS outputs on distorted AC waveforms. True RMS outputs are ideal for nonlinear loads or noisy circuits. For existing installations, split core models can be installed without disconnecting cables. Each model offers three jumper selectable ranges to reduce the risk of ordering the wrong model.

BENEFITS/FEATURES
- Integral mounting flange for quick installation
- Solid core or split core configurations
- Jumper selectable range
- True RMS

APPLICATIONS
- BAS
- HVAC

SPECIFICATIONS

Amperage Range: Up to 200 A (depending on model).
Output: 4-20 mA, true RMS.
Power Requirements: 24 VDC nominal.
Accuracy: 1%.
Temperature Limits: -22 to 158°F (-30 to 70°C).
Humidity Limits: 0 to 95% (non-condensing).
Response Time: 250 ms to 90%.
Isolation Voltage: 2000 V.
Frequency: 10 to 400 Hz.
Enclosure Rating: UL 94 V-0 flammability rated, ABS plastic housing.
Compliance: CE, cULus.

MODEL CHART

Model	Range	Case	Model	Range	Case
CCT60-200	10/20/50 A	Solid core	**CCT60-100**	10/20/50 A	Split core
CCT70-200	100/150/200 A	Solid core	**CCT70-100**	100/150/200 A	Split core

Dwyer

SERIES APT

AC POWER TRANSFORMERS

20 to 150 VA, Single or Dual Hub, Circuit Breaker, UL Class 2

APT-40-3SN

APT-50-5DB

APT-50-5SB

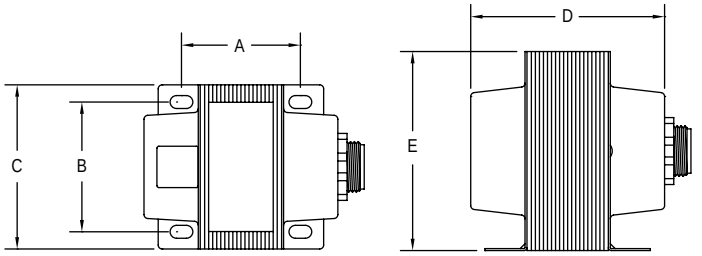

Model	Dimensions in [mm] A	B	C	D	E
APT-20-0SN	1-31/64 [37.6]	1-21/32 [41.9]	1-7/8 [47.5]	2-17/64 [57.4]	2-39/64 [66.2]
APT-20-1SN	1-31/64 [37.6]	1-21/32 [41.9]	1-7/8 [47.5]	2-17/64 [57.4]	2-39/64 [66.2]
APT-40-3SN	1-61/64 [49.5]	1-25/32 [45.2]	2-11/64 [55.0]	2-43/64 [68.0]	2-7/8 [73.0]
APT-40-5DN	1-61/64 [49.5]	1-25/32 [45.2]	2-11/64 [55.0]	2-3/4 [70.0]	2-7/8 [73.0]
APT-50-5DB	1-13/16 [46.0]	1-31/32 [50.2]	2-1/2 [63.5]	3-7/16 [87.1]	3-1/32 [77.0]
APT-50-5SB	1-13/16 [46.0]	1-31/32 [50.2]	2-1/2 [63.5]	3-7/16 [87.1]	3-1/32 [77.0]
APT-75-5DB	2-13/64 [56.0]	1-31/32 [50.2]	2-1/2 [63.5]	3-53/64 [97.1]	3-1/32 [77.0]
APT-75-5SB	2-13/64 [56.0]	1-31/32 [50.2]	2-1/2 [63.5]	3-53/64 [97.1]	3-1/32 [77.0]
APT-100-5DB	2-39/64 [66.0]	1-31/32 [50.2]	2-1/2 [63.5]	4-1/4 [107.1]	3-1/32 [77.0]
APT-100-5SB	2-39/64 [66.0]	1-31/32 [50.2]	2-1/2 [63.5]	4-1/4 [107.1]	3-1/32 [77.0]
APT-150-1DB	2-33/64 [64.0]	1-31/32 [50.2]	2-1/2 [63.5]	3-9/16 [90.5]	3-1/32 [77.0]

The **Series APT AC Power Transformers** provide isolated step-down to 24 VAC with models offering VA ratings of 20, 40, 50, 75, 96, or 150 VA's. These cost efficient transformers are offered in single or dual 1/2″ NPT threaded hub mounts with 8-1/2″ 18 AWG wire leads, to meet the installation requirements of a variety of building automation and control panel applications in HVAC. All models are UL Class 2 listed.

BENEFITS/FEATURES

- Single or dual 1/2″ NPT
- Universal supply voltage input
- With or without integral circuit breaker

APPLICATIONS

- BAS
- HVAC

SPECIFICATIONS

Input Voltage: See model chart.
Input Frequency: 50/60 Hz.
Output Voltage: See model chart.
Output VA Rating: 20, 40, 50, 75, 96, or 150 VA.
Mounting: Slotted foot mount with single, or dual 1/2″ NPT hub.
Current Protection: See model chart.
Electrical Connections: Models ending in -20: 20″ (508 mm) 18 AWG leads; All other models: 8.5″ (210 mm) 18 AWG leads.
Weight: See model chart.
Compliance: CE, cULus.

MODEL CHART

Model	Rating	Input Voltage	Output Voltage	Mounting	Current Protection	Wiring
APT-20-0SN	20 VA	24 VAC	24 VAC	Foot mount with single hub	Inherent	Diagram B
APT-20-1SN	20 VA	120 VAC	24 VAC	Foot mount with single hub	Inherent	Diagram A
APT-40-0SN	40 VA	24 VAC	24 VAC	Foot mount with single hub	Inherent	Diagram B
APT-40-1DN	40 VA	120 VAC	24 VAC	Foot mount with dual hub	Inherent	Diagram A
APT-40-1SN	40 VA	120 VAC	24 VAC	Foot mount with single hub	Inherent	Diagram A
APT-40-2DN	40 VA	240 VAC	24 VAC	Foot mount with dual hub	Inherent	Diagram C
APT-40-2SN	40 VA	240 VAC	24 VAC	Foot mount with single hub	Inherent	Diagram C
APT-40-3SN	40 VA	120/208/240/277 VAC	24 VAC	Foot mount with single hub	Inherent	Diagram D
APT-40-5DN	40 VA	120/208/240/277/480 VAC	24 VAC	Foot mount with dual hub	Inherent	Diagram C
APT-50-1DB	50 VA	120 VAC	24 VAC	Foot mount with dual hub	Button circuit breaker	Diagram A
APT-50-1DN	50 VA	120 VAC	24 VAC	Foot mount with dual hub	Inherent	Diagram A
APT-50-1SB	50 VA	120 VAC	24 VAC	Foot mount with single hub	Button circuit breaker	Diagram A
APT-50-1SN	50 VA	120 VAC	24 VAC	Foot mount with single hub	Inherent	Diagram A
APT-50-2DB	50 VA	240 VAC	24 VAC	Foot mount with dual hub	Button circuit breaker	Diagram C
APT-50-2DN	50 VA	240 VAC	24 VAC	Foot mount with dual hub	Inherent	Diagram C
APT-50-2SB	50 VA	240 VAC	24 VAC	Foot mount with single hub	Button circuit breaker	Diagram C
APT-50-2SN	50 VA	240 VAC	24 VAC	Foot mount with single hub	Inherent	Diagram C
APT-50-5DB	50 VA	120/208/240/277/480 VAC	24 VAC	Foot mount with dual hub	Button circuit breaker	Diagram C
APT-50-5SB	50 VA	120/208/240/277/480 VAC	24 VAC	Foot mount with single hub	Button circuit breaker	Diagram C
APT-75-1DB	75 VA	120 VAC	24 VAC	Foot mount with dual hub	Button circuit breaker	Diagram A
APT-75-1SB	75 VA	120 VAC	24 VAC	Foot mount with single hub	Button circuit breaker	Diagram A
APT-75-2DB	75 VA	240 VAC	24 VAC	Foot mount with dual hub	Button circuit breaker	Diagram C
APT-75-2SB	75 VA	240 VAC	24 VAC	Foot mount with single hub	Button circuit breaker	Diagram C
APT-75-5DB	75 VA	120/208/240/277/480 VAC	24 VAC	Foot mount with dual hub	Button circuit breaker	Diagram C
APT-75-5SB	75 VA	120/208/240/277/480 VAC	24 VAC	Foot mount with single hub	Button circuit breaker	Diagram C
APT-100-1DB	96 VA	120 VAC	24 VAC	Foot mount with dual hub	Button circuit breaker	Diagram A
APT-100-1DB-20	100 VA	120 VAC	24 VAC	Foot mount with dual hub	Button circuit breaker	Diagram A
APT-100-1SB	96 VA	120 VAC	24 VAC	Foot mount with single hub	Button circuit breaker	Diagram A
APT-100-2DB	100 VA	240 VAC	24 VAC	Foot mount with dual hub	Button circuit breaker	Diagram C
APT-100-2SB	100 VA	240 VAC	24 VAC	Foot mount with single hub	Button circuit breaker	Diagram C
APT-100-5DB	100 VA	120/208/240/277/480 VAC	24 VAC	Foot mount with dual hub	Button circuit breaker	Diagram C
APT-100-5SB	100 VA	120/208/240/277/480 VAC	24 VAC	Foot mount with single hub	Button circuit breaker	Diagram C
APT-150-1DB	150 VA	120 VAC	24 VAC	Foot mount with dual hub	Button circuit breaker	Diagram A

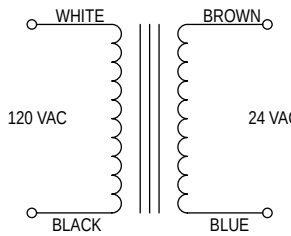

Diagram A

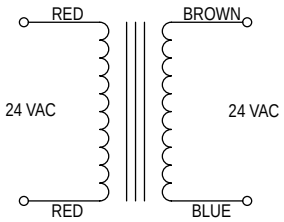

Diagram B

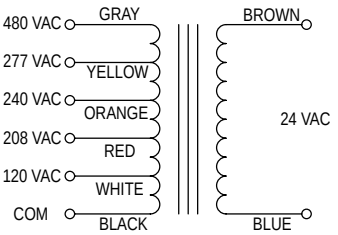

Diagram C

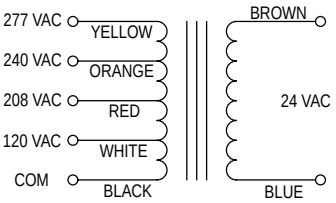

Diagram D

Dwyer

MODEL MN-1

MINI-NODE™ COMMUNICATION SIGNAL CONVERTER

Converts RS-485 to USB, Integral USB Connector, No External Power

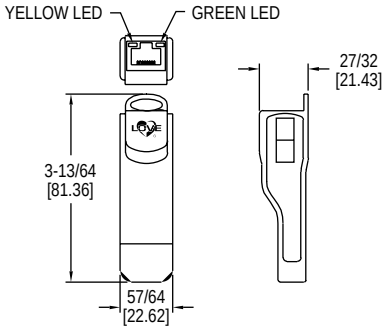

The **Model MN-1 Mini-Node™ Communication Signal Converter** is a economical device that converts half-duplex RS-485 serial communications signals into a signal that can be read by any computer with a USB port. The integral USB connector and RJ-45 connector reduces setup time by eliminating extra wiring. The Model MN-1 is powered via the USB connection which eliminates the need for an external power source. The compact size is great for field installation, control panels, and lab testing.

BENEFITS/FEATURES
- Converts half-duplex RS-485 via USB port
- Reduces setup time of process controllers

APPLICATIONS
- Oven, boiler, or chiller control
- Hot plates/melt pots
- Packaging equipment
- Environmental chambers
- Medical equipment
- Food service equipment

SPECIFICATIONS

Power Requirements: No external power required.
Power Consumption: 0.4 W.
Isolated Voltage: 3000 VDC.
Input Impedance: 96 kΩ.
USB Connector: B-type (female).
RS-485 Connector: RJ-45.
Baud Rate: 75, 150, 300, 600, 1200, 2400, 4800, 9600, 19200, 38400, 57600, and 115200 bps.
Compatibility: Full compliance with USB V.2.0 specification.
Compliance: CE.

MODEL CHART

Model	Description
MN-1	Mini-Node™ USB to RS-485 converter

SERIES A-700

POWER SUPPLY

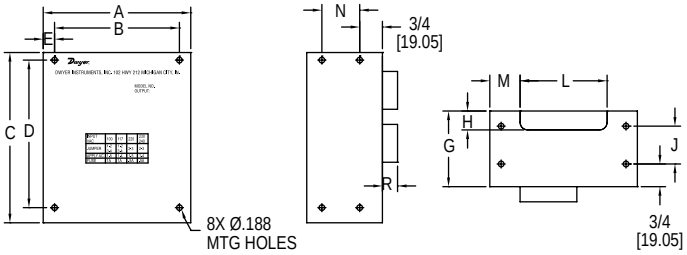

Dim.	0.5 amp	2.4 amp	4.8 amp	Dim.	0.5 amp	2.4 amp	4.8 amp	Dim.	0.5 amp	2.4 amp	4.8 amp
A	4 [101.6]	4-7/8 [123.83]	9 [228.6]	E	25/64 [9.92]	1/4 [6.35]	1/2 [12.7]	L	17/64 [14.68]	2-55/64 [72.63]	-
B	3-3/8 [85.73]	4-1/8 [104.78]	8 [203.2]	G	1-5/8 [41.28]	2-1/2 [63.5]	2-3/4 [69.85]	M	51/64 [20.24]	1-1/32 [26.19]	-
C	4-7/8 [123.84]	5-5/8 [142.88]	4-7/8 [123.83]	H	37/64 [14.68]	43/64 [17.07]	-	N	-	1-1/4 [31.75]	1-1/4 [31.75]
D	4-1/8 [104.78]	4-7/8 [123.83]	4-1/8 [104.78]	J	-	1-1/4 [31.75]	1-1/4 [31.75]	R	29/64 [11.51]	29.64 [11.51]	17/32 [13.49]

The economical and reliable **Series A-700 Power Supply** is suitable for powering all Dwyer pressure, temperature or air velocity transmitters. Inexpensive, open-frame design allows convenient access to input/output solder terminals. Auxiliary inputs are selectable for operation from power sources found worldwide. Compact size eases enclosure installations.

BENEFITS/FEATURES
- Universal supply voltage input
- Compact size

APPLICATIONS
- BAS
- HVAC

SPECIFICATIONS

AC Input: 100/120/220/230-240 VAC ±10%, 47-63 Hz.
DC Output: 24-28 VDC regulated.
Maximum Current Output: A-700: 0.5 A @ 60 Hz, 0.45 A @ 50 Hz; A-700-2: 2 A @ 60 Hz, 1.8 A @ 50 Hz; A-700-3: 4.8 A @ 60 Hz, 4.5 A @ 50 Hz.
Operating Temperature: 32 to 122°F (0 to 50°C).
External Fuse Required: 0.5 A for 100-120 VAC, 0.25 A for 220-240 VAC.
Dimensions: 4-7/8″H x 4″W x 1-5/8″D.
Weight: 2 lb.

MODEL CHART

Model	Description
A-700	0.5 A
A-700-2	2 A
A-700-4	4.8 A

Dwyer

MODEL BPS-005

LOW COST DC POWER SUPPLY

Regulated 0.5 A, 1 A Fuse Protection

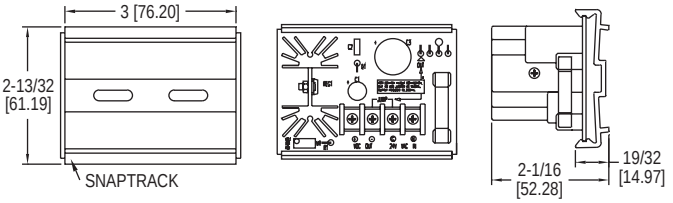

The **Model BPS-005 Low Cost DC Power Supply** is a regulated .5 A power supply that accepts 24 VAC input and provides an adjustable 1.5-29 VDC output. Output voltage adjustments are made using the on-board potentiometer while measuring the output with a multimeter. A compact snap track design allows the power supply to be surface mounted within a panel.

BENEFITS/FEATURES
- Snap track design allowing for easy panel installation
- Regulated 0.5 Amp

APPLICATIONS
- BAS
- HVAC

SPECIFICATIONS

Input: 24 VAC/VDC 50/60 Hz.
Output: 24 VDC (full wave rectified and regulated) adjustable 1.5-29 VDC, 0.5 A max.
Maximum Current Output: 0.5 A.
Over-Current Protection: 1 A fuse.
Operating Temperature: 32 to 130°F (0 to 55°C).
Humidity Limits: 95% (non-condensing).
Weight: 0.4 lb.
Agency Approvals: Meets the technical requirements of EU Directive 2011/65/EU (RoHS II).

MODEL CHART

Model	Description
BPS-005	Low cost DC power supply

MODEL BPS-015

LOW COST DC POWER SUPPLY

Regulated 1.5 A, 3 A Fuse Protection

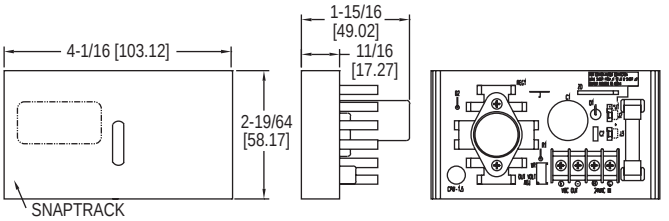

The **Model BPS-015 Low Cost DS Power Supply** is used to convert 24 VAC to a regulated DC power source for transmitters with 4-20 mA outputs. The output voltage can be field adjusted from 1.5-27 V using a potentiometer. The 3 A fuse protects the power supply from over-current conditions. The snap-on bracket can be quickly surface mounted to any flat surface.

BENEFITS/FEATURES
- Snap track design allowing for easy panel installation
- Regulated 1.5 Amp

APPLICATIONS
- BAS
- HVAC

SPECIFICATIONS

Input: 24 VAC/VDC 50/60 Hz.
Output: 24 VDC (full wave rectified and regulated) adjustable 1.5-27 VDC.
Maximum Current Output: 1.5 A (de-rated to 400 mA for non-isolated circuits).
Temperature Limits: 32 to 130°F (0 to 55°C).
Humidity Limits: 95% (non-condensing).
Weight: 0.4 lb.

MODEL CHART

Model	Description
BPS-015	Power supply

MODEL SCD-PS

DIN RAIL MOUNT DC POWER SUPPLY

Regulated 1 A, 24 VDC Output

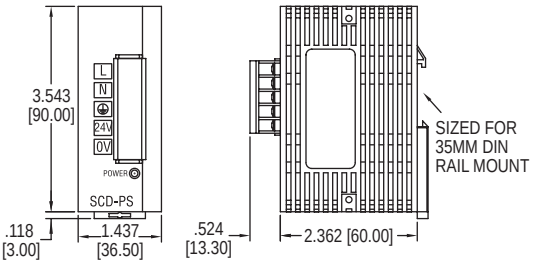

The **Model SCD-PS DIN Rail Mount DC Power Supply** is a compact and economical solution for providing DC power to any Dwyer pressure, humidity, temperature, level or air velocity transmitters. Input voltage can range from 100-240 VAC, 50/60 Hz without any jumpers or dip switch selections. A plastic cover slides over the terminals in order to prevent shock from accidental touching of high voltage wires.

BENEFITS/FEATURES
- DIN rail mount
- Universal supply voltage input

APPLICATIONS
- BAS
- HVAC

SPECIFICATIONS

AC Input: 100-240 VAC, 50/60 Hz.
DC Output: 24 VDC (±3% VDC).
Maximum Current Output: 1 A.
Noise: Under 100 mVp-p typical at full load.
Temperature Limits: 32 to 131°F (0 to 55°C).
Weight: 5.6 oz (158 g).
Agency Approvals: CE, cULus.

MODEL CHART

Model	Description
SCD-PS	DIN rail DC power supply

Dwyer

MODEL VBT-1

VIBRATION TRANSMITTER

Continuous 4-20 mA Output Signal

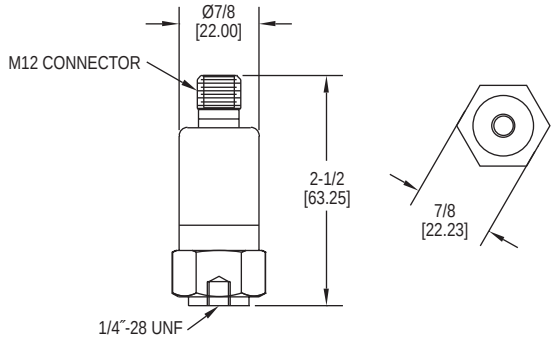

The **Model VBT-1 Vibration Transmitter** continuously detects the vibration in a system and monitors for unusual operating conditions and potential failure. The vibration is converted into an analog signal at the current output. The 2-wire loop power operation, combined with standard M12 micro cable connector and interchangeable mounting studs, make for a fast and reliable installation.

BENEFITS/FEATURES
- Easy set-up and operating concept
- Stainless steel housing
- No software required

APPLICATIONS
Vibration monitoring for:
- Motors
- Pumps
- Fans
- Engines
- Compressors
- Gear boxes

SPECIFICATIONS
Housing Material: 316 SS.
Temperature Limit: -22 to 221°F (-30 to 105°C).
Accuracy: < ±3%.
Connections: M12 connector.
Enclosure Rating: NEMA 6 (IP68).
Electrical Rating: 9.6-32 VDC.
Mounting Orientation: Any position.
Nonlinearity: < ±0.25% of span.
Frequency Range: 10 to 1000 Hz.
Output Signal: 4-20 mA.
Repeatability: < 0.5%.
Weight: 0.28 lb (0.125 kg).
Agency Approvals: CE.

MODEL CHART	
Model	**Description**
VBT-1	Vibration transmitter

ACCESSORIES	
Model	**Description**
A-283	4 wire connector

Dwyer

SERIES LCT216

DIGITAL TIMER/TACHOMETER/COUNTER

3 Controls in 1 Device, DIP Switch Configuration

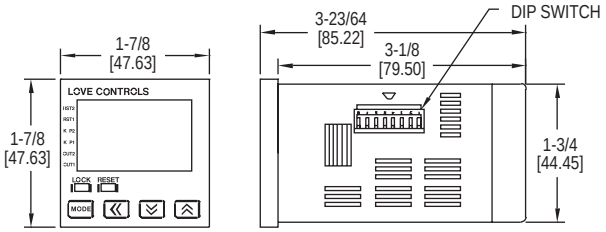

The **Series LCT216 Digital Timer/Tachometer/Counter** combines a versatile timer, counter, and tachometer all in one device. The bright, easy-to-read display shows the desired set point and the current process value as well as the operating mode that the control is functioning in. For quick set up, many of the programming parameters can be set with external dip switches located on the side of the unit.

BENEFITS/FEATURES
- Fourteen pre-programmed timer functions
- One stage, two stage, batch, total, and dual counting modes

APPLICATIONS
- Industrial ovens
- Batch counting in conveyor systems
- Silk screening equipment

MODEL CHART	
Model	**Output Type**
LCT216-100	Transistor
LCT216-110	Relay

SPECIFICATIONS

Operating Temperature Range: 32 to 122°F (0 to 50°C).
Humidity Conditions: 35 to 85% RH (non-condensing).
Control Output Ratings: (Out 1) Relay: SPST 5 A at 250 VAC; Transistor: NPN open collector 100 mA / 30 VDC residual voltage = 1.5 VDC max; (Out 2) Relay: SPST 5 A at 250 VAC, Transistor: NPN open collector 100 mA / 30 VDC residual voltage = 1.5 VDC max.
Reset Time: 0.001 s minimum.
Inputs: Dry contact, PNP, or NPN.
Timing Functions: 14 pre-programmed timing functions.
Supply Voltage: 100 to 240 VAC 50 / 60 Hz.
Power Consumption: Less than 10 VA.
Internal Power Supply: 12 VDC ±10%, 100 mA.
Display: Two-line 6 digit negative transmissive LCD display.
Weight: 4 oz (114 g).
Agency Approvals: CE, cULus.

SERIES LCT316

COUNT DOWN DIGITAL TIMER

Quick Installation, Digital Input, Audible Alarm

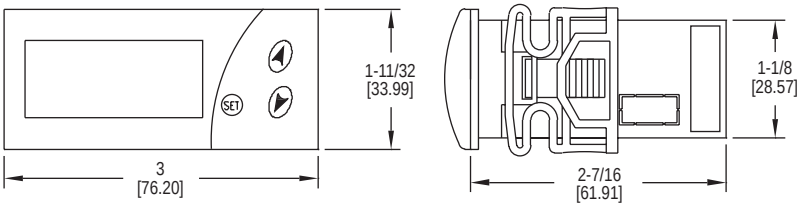

The **Series LCT316 Count Down Digital Timer** provides accurate countdown timing for a variety of applications. The timer can be triggered remotely using the digital input terminals or locally via the set button. Time intervals can be set up to 999 minutes or seconds and an internal buzzer will sound when the time interval has expired.

BENEFITS/FEATURES
- 1 second to 999 minute field set time interval
- Audible alarm for status indication

APPLICATIONS
- Commercial cooking equipment
- Commercial dish washers and refrigeration equipment

MODEL CHART	
Model	**Supply Power**
LCT316-100	115 VAC
LCT316-200	230 VAC
LCT316-300	12 VAC/DC
LCT316-400	24 VAC/DC

SPECIFICATIONS

Operating Temperature Range: 32 to 158°F (0 to 70°C).
Control Output Ratings: Relay, SPST NO, 16 A at 250 VAC resistive.
Status Light: LED shows time and operation.
Inputs: Digital input for start and reset.
Supply Voltage: 115 VAC, 230 VAC, 12 VAC/DC, 24 VAC/DC depending on model.
Power Consumption: 4 VA.
Weight: 5.6 oz (158.8 g).
Agency Approvals: CE, cURus.

ZENER BARRIERS

Intrinsically Safe Barriers for Hazardous Locations

MTL7787

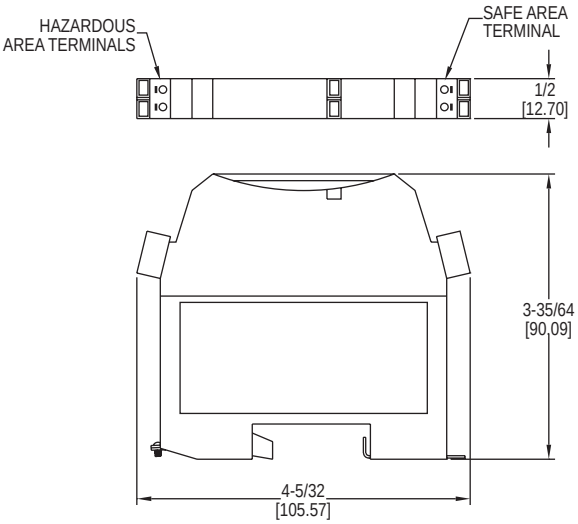

The **Series MTL7706/7787 Zener Barriers** are an intrinsically safe shunt-diode barrier that can be used to communicate with and provide isolations for certain Dwyer® transmitters approved for use in hazardous areas. These barriers limit the amount of energy allowed to pass into the hazardous area, which inhibit ignition in flammable atmospheres.

BENEFITS/FEATURES

- Approved for use in hazardous areas

APPLICATIONS

- Electrically isolates pressure and level transmitters from unregulated circuits for intrinsically safe applications

SPECIFICATIONS

Transmitter Voltage: 16.2 V at 20 mA with 250 Ω load (negative w.r.t. earth); 11.0 V at 20 mA with 500 Ω load (negative w.r.t. earth).
Safe Area Output: 4-20 mA.
Load Resistance: 0 to 500 Ω.
Power Requirement: 20-35 VDC w.r.t. earth.
Accuracy: ±2 µA under all conditions.
LED Indicator: Green: Power indication.
Temperature Limits: Operating: -4 to 140°F (-20 to 60°C); Storage: -40 to 176°F (-40 to 80°C).
Humidity: 5 to 95% RH.
Terminals: Accommodate up to 2.5 mm² stranded or single-core.
Safety Description: 28 µV, 300 Ω, 93 mA.
Weight: 4.9 oz (140 g).
Agency Approvals: See table.

COMPATIBLE MODELS: 637, 608, SBLTX, PBLTX, IS626

Model	Approval	Dwyer Series
MTL7706	UL for class I; div. 1 groups A, B, C, D CL II; div. 1 groups E, F, G; CL III div. 1	IS626, SBLTX, PBLTX
MTL7706	FM for class I, II, III; div. 1 groups B, C, D, E, F, G	637
MTL7706	FM for class I, II, III; div. 1 groups A, B, C, D, E, F, G	608

Note: Compatible models: 637, 608, SBLTX, PBLTX, IS626.

MODEL CHART

Model	Description
MTL7706	Zener barrier
MTL7787	Zener barrier

ACCESSORIES

Model	Description
A-360	Aluminum DIN rail 1 m

MODEL CHART

	FM			BASEEFA (ATEX)		
Model	Group	µF	mH	Group	µF	mH
MTL7706	A & B	0.083	4.2	IIC	0.083	4.2
MTL7787	A & B	0.083	3.05	IIC	0.083	3.05

Region (Authority)	Standard	Approved For	Certificate/File no.
USA (FM) (UL)	3600, 3610 entity 3611, 3810 UL698, UL913 UL1604	AIS/I,II,III/1/Entity ABCDEFG-SCI-942; NI/I/@/ABCD/T4 [I/0] AEx[ia]IIC-SCI-942 Entity; NI/1/2/IIC/T4; Ta=140°F (60°C)	3010737
Canada (CSA)	CAN/CSA E60070, IEC60079, C22.2	Class I, Div.2, Gps A, B, C, D; Ex nA [iA] IIC T4 Class I, Xone 2, Aex nA IIC T4	1345550
UK (BASEEFA)	EN 50014, EN 50020	EEx ia IIC	BAS01ATEX7217
UK (BASEEFA) Systems	EN 50039	EEx ia IIC	Ex01E2219

Dwyer

SERIES MTL5541

GALVANIC BARRIER

Intrinsically Safe Isolators for Hazardous Locations

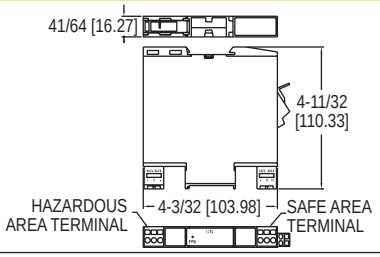

The **Series MTL5541 Galvanic Barrier** provides intrinsically safe isolation for communication with Dwyer® transmitters approved for use in hazardous areas. This galvanic barrier eliminates the need for a high integrity earth ground required when using shunt type diode type safety barriers. DIN rail mounting and plug-in signal and power connectors simplify installation and maintenance.

BENEFITS/FEATURES
- Easy snap-in installation for most DIN rails
- Safe to use in hazardous locations

APPLICATIONS
- Electrically isolates pressure and level transmitters from unregulated circuits for intrinsically safe applications

MODEL CHART	
Model	**Description**
MTL5541	Galvanic barrier

ACCESSORIES	
Model	**Description**
A-360	Aluminum DIN rail 1 m

COMPATIBLE MODELS: 608, SBLTX, PBLTX, IS626		
Model	**Approval**	**Dwyer Series**
MTL 5541	UL for class I; div. 1 groups A, B, C, D class II div. 1 groups E, F, G class III div. 1	IS626, SBLTX, PBLTX
MTL 5541	FM for class I, II, III; div. 1 groups A, B, C, D, E, F, G	608

SPECIFICATIONS

Hazardous Area Input: Signal range: 0-24 mA (including over-range); Transmitter voltage: 16.5 V at 20 mA.
Safe Area Output: Signal range: 4-20 mA; Under/over-range: 0-24 mA; Load resistance: 0 to 360Ω @ 24 mA, or 0 to 450Ω @ 20 mA; Current sink: 600Ω max.; Maximum voltage source: 24 VDC; Output resistance: > 1 MΩ.
Power Requirement: 20-35 VDC
Response Time: Settles to within 10% of final value within 50 µs.
Current Consumption (20 mA signal): 51 mA @ 24V.
Maximum Power Dissipation (20 mA signal): 0.7 W @ 24 VDC, 1.0 W @ 24 VDC.
Isolation: 250 V RMS, tested at 1500 V RMS minimum, between safe-area and hazardous-area terminals; 50 V between safe-area circuits and power supply.
Transfer Accuracy at 68°F (20°C): Better than 15 µA.
LED Indicator: Green: Power indication.
Temperature Limits: Operating: -6 to 140°F (-20 to 60°C); Storage: -40 to 176°F (-40 to 80°C).
Temperature Drift: < 0.8µA/°C.
Humidity: 5 to 95% RH.
Mounting: T-section 35 mm DIN rail (7.5 or 15 mm) to EN 50022.
Terminals: Accommodate up to 2.5 mm² stranded or single-core.
Safety Description: Vo= 28 V, Io= 93 mA, Po= 651mW, Um= 253 RMS or DC.
Weight: 5.3 oz (150 g).
Agency Approvals: See table.

Certifying Authority	Standard	Approved For	Certificate/File no.
FM (USA)	FM3600, FM3610, FM3810	Associated Apparatus providing intrinsically safe circuits for Class I, II, III, Division 1, Groups A, B, C, D, E, F, and G when installed per the control drawing SCI-1028; Non-incendive for Class I, Division 2, Groups A, B, C, and D T4; Intrinsic safety for AEx [ia] IIC when installed per the control drawing SCI-1028; Non sparking for Class I, Zone 2, AExnA IIC T4 Gc hazardous (classified) locations with an ambient temperature rating of -20OC to +60OC	3025815
Canada (CSA)	CSA-C22.2 No. 157-M1992, CSA-C22.2 No. 213-M1987		
UL	UL61010-1 Edition 3 UL913 Edition 8 UL60079-0 Edition 6 UL60079-11 Edition 6	Associated Apparatus for use in Unclassified Locations or Class I, Division 2, Groups A, B, C, D	E120058
CSA	C22.2 No. 142-M1987 C22.2 No. 157-M1992 C22.2 No. 213-M1987 CAN/CSA E60079-0:07 CAN/CSA E60079-11:02 CAN/CSA E60079-15:02	Class I, Division 2, Groups A, B, C, D; Class I, Zone 2, Group IIC; Ex nA [ia] IIC; Ex nC [ia] IIC	LR 36637
ATEX	EN 60079-0:2012 EN 60079-15:2010	Ex nA IIC T4 Gc	Baseefa07ATEX0213 MTL08ATEX5541X BAS01ATEX7217
IECEx (Type 'n')	IEC 60079-0:2011 Edition 6 IEC 60079-15:2010 Edition 4	EX nA IIC T4 Gc	IECEx BAS 15.0119X
IECEx (Intrinsic Safety)	IEC 60079-0:2011 Edition 4 IEC 600709-11:2011 Edition 6	[Ex ia Ga] IIC, [Ex ia Da] IIIC, [Ex ia Ma] I	IECEx BAS 07.0069
IECEx ([Ex ia] I/IIB/IIC)	IEC 60079-0:2004 Edition 4 IEC 60079-11:2006 Edition 1 IEC 60079-0:2004 Edition 1 IEC 60079-11:2005 Edition 1	[Ex ia] I/IIB/IIC, IECEx ITA 08.0009X	IECEx ITA 08.0009X

MODEL KFD0

GALVANIC BARRIER

Loop Powered, Intrinsically Safe Isolators

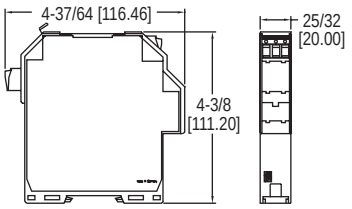

The **Model KFD0 Galvanic Barrier** provides complete isolation for communication with Dwyer® intrinsically safe transmitters approved for use in hazardous areas. This galvanic barrier eliminates the need for a high integrity earth ground required when using shunt type diode type safety barriers. Unlike most other isolators, the Model KFD0-SCSEX1.55 does not require external power and has a low current draw.

BENEFITS/FEATURES
- Designed to mount on most standard DIN rails
- Approved for use in hazardous areas

APPLICATIONS
- Used to isolate voltages for intrinsically safe applications for HHT series

SPECIFICATIONS

Hazardous Area Input: Signal range: 4-20 mA (linear transmission 1-22 mA); Available transmitter voltage: ≥ 16 V for supply voltage > 21 V.
Safe Area Output: Signal range: 4-20 mA; Transmitter voltage: ≤ 30 VDC.
Response Time: ≤ 20 µs at 0, and ≤ 600 µs at 800 load.
Maximum Power Dissipation: 150 mW @ 20 mA and V <24 V.
Temperature Limits: -4 to 140°F (-20 to 60°C).
Temperature Drift: ≤ 0.5 µA/°C.
Weight: 4.2 oz (120 g).
Agency Approvals: CE, FM.

ACCESSORIES	
Model	**Description**
A-360	Aluminum DIN rail 1 m

MODEL CHART								
Model	**Description**	**Approval**	**Dwyer Series**	**Vo (V)**	**Io (mA)**	**Group**	**µF**	**mH**
KFD0-SCS-EX1.55	Loop powered galvanic barrier	FM for class I, zone 1, groups IIC, IIB, IIA; class I, II, III, div. 2, groups A, B, C, D, F, G	HHT-IX	23.1	38.2	IIC (A, B), IIB (C), IIA (D, F, G)	0.042, 0.267, 0.267	0.5, 2.5, 2.5

SAFE-T-GROUND

Explosion-Proof, Intrinsically Safe, Ground Continuity Control

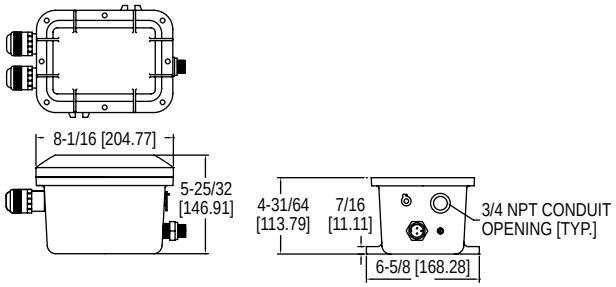

The **Series TR-7 Safe-T-Ground** provides continuous monitoring of a truck's ground connection throughout loading operations. The TR-7 instantly stops loading operations if a tank truck loses its ground. To safeguard loading operations, the Safe-T-Ground circuit can be wired into your pump control, and to an audible alarm or signal light.

BENEFITS/FEATURES
- Explosion-proof housing
- Audible alarm and LED status indicators

APPLICATIONS
- Chemical
- Oil and gas

MODEL CHART						
Example	**TR-7**		**-X**	**B**	**L**	**TR-7-XBL**
Construction	TR-7					Explosion-proof and intrinsically safe
Power Supply Option		- U				120 VAC (standard) 220/240 VAC
Cable Length			- X			36″ coiled, extends to 16´ (standard) 72″ coiled, extends to 32´
Cable Connection				- B		Stud (standard) Battery (alligator) clamp
Options					L*	Red and green indicating lights*
*Not available with 220/240 VAC power supply.						

MODEL CHART	
Model	**Description**
TR-7	Safe-T-Ground
TR-7-L	Safe-T-Ground with integral pilot lights

SPECIFICATIONS

Housing: 356-T6 cast aluminum alloy (copper-free), explosion-proof – Class I, Group D.
Size: 6-5/8″ W x 10-3/8″ H x 5-5/8″ D.
Temperature Limits: -13 to 104°F (-25 to 40°C).
Power Requirements: 105-125 VAC, 60 Hz. 7.75 watts - with light, 1.75 watts - without lights. Optional 220-240 VAC, 50/60 Hz.
Electrical Rating, Relay: DPDT, 10 A, 125 VAC, 60 Hz contact rating.
Wiring: Terminal strip.
Conduit Connection: 3/4″ NPT.
Installation: 7/16″ mounting lugs, integrally cast.
Contactor: (Grounding clamp) molded polyethylene with beryllium copper contact clips. 16-2 type SO coiled cable; retracts to 3´, extends to 16´.
Grounding Studs: 2 supplied. Order a pair for each truck.
Shipping Weight: 20 lb with contactor and cord.
Compliance: UL.

Dwyer

SERIES SVT

SOLENOID VALVE ENCLOSURE WITH TIMER

Compact Size, NEMA 4X Enclosure

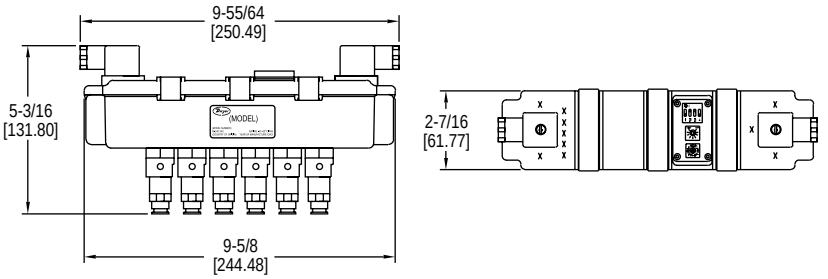

The **Series SVT Solenoid Valve Enclosure with Timer** is a compact, reliable, and economic package that combines a timer board and solenoid valve enclosure into one package. Each model is available with 2, 4, or 6 valves, but expansion modules can easily be daisy chained for a maximum of 60 outputs.

BENEFITS/FEATURES

- Minimize installation time and costs with one enclosure for electronics and valves
- Easy wiring installation that accepts any global voltage input
- Quick customization configuration with field selectable cleaning functions and on/off settings

APPLICATIONS

- Dust collection
- Pneumatic conveying
- Industrial vacuums

SPECIFICATIONS

Service: Compatible gases, filtered and oil-free.
Wetted Materials: Pilot body: Brass; Spring: 302 SS; O-ring: NBR.
Temperature Limits: 14 to 122°F (-10 to 50°C).
Pressure Limit: 116 psi (8 bar).
Power Requirements: 90-240 VAC 50-60 Hz, 24 VAC 50-60 Hz, 24 VDC ±10%.
Power Consumption: 25 VA/25 W.
Fuse: 90-240 VAC 0.5 A delayed, 24 VAC/DC 1.5 A delayed.
Electrical Connection: 2 DIN A 43652 connectors.
Enclosure Rating: NEMA 4X (IP66).
Enclosure Material: Polyamide with carbon fiber, polycarbonate, TPE rubber.
Process Connection: 1/4˝OD push to connect.
Mounting Orientation: Any position.
On-Time: 150 ms to 700 ms.
Off-Time: 4 s to 210 s.
Compliance: CE.

MODEL CHART

Model	Description	Number of Solenoids	Supply Voltage	Model	Description	Number of Solenoids	Supply Voltage
SVT-2	Solenoid valve enclosure with timer	2	90-240 VAC	**SVT-3-DC**	Solenoid valve enclosure with timer	3	24 VDC/VAC
SVT-3	Solenoid valve enclosure with timer	3	90-240 VAC	**SVT-4-DC**	Solenoid valve enclosure with timer	4	24 VDC/VAC
SVT-4	Solenoid valve enclosure with timer	4	90-240 VAC	**SVT-6-DC**	Solenoid valve enclosure with timer	6	24 VDC/VAC
SVT-6	Solenoid valve enclosure with timer	6	90-240 VAC	**SVTE-4**	Expansion module	4	Any
SVT-2-DC	Solenoid valve enclosure with timer	2	24 VDC/VAC	**SVTE-6**	Expansion module	6	Any

Note: SVTE modules are powered from the main enclosure and can be used with either the 90-240 VAC or the 24 VDC/VAC SVT models.

ACCESSORIES

Model	Description
A-SVT-V	Replacement pilot valve assembly

USA: California Proposition 65
WARNING: This product can expose you to chemicals including Lead, which is known to the State of California to cause cancer and birth defects or other reproductive harm. For more information go to www.P65Warnings.ca.gov.

Dwyer

SERIES DCT500A

LOW COST TIMER CONTROLLER

Compact, Easy to Use, 4, 6 or 10 Channels

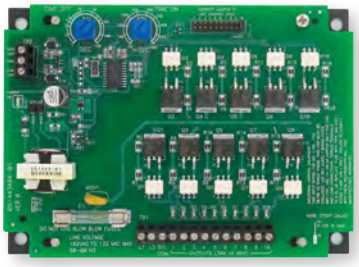

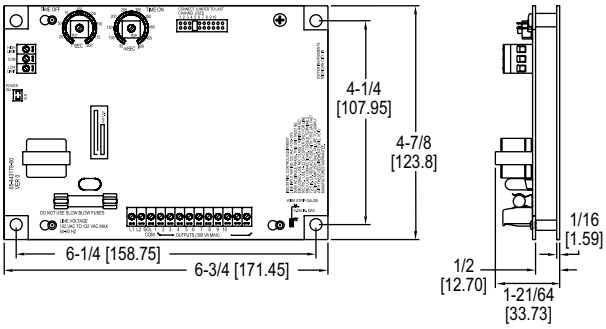

The **Series DCT500A Low Cost Timer Controller** is designed to provide continuous or on-demand cleaning for receivers and pulse jet systems. It is available in either 4, 6, or 10 channels, and each unit is the same size, minimizing enclosure space and reducing overall system installation cost. For added safety, the control circuitry including the control inputs are isolated from the line voltage.

BENEFITS/FEATURES

- Simple and easy to use design
- Optional weatherproof enclosure available

APPLICATIONS

- Dust collection
- Pneumatic conveying
- Cement batch plants

MODEL CHART		
Model	**Description**	**No. of Channels**
DCT504A	Timer controller	4
DCT506A	Timer controller	6
DCT510A	Timer controller	10

OPTIONS	
To order add suffix:	**Description**
-L	Mounting bracket for field retrofits: 8-1/4″ x 6-1/4″ (209.55 mm x 158.75 mm)
-WP	Weatherproof housing: standard models Weatherproof housing: with option -L mounting bracket

SPECIFICATIONS*
Output Channels: 4, 6, and 10 channels.
Power Requirements: 102-132 VAC 50 or 60 Hz.
Power Consumption: 2.5 W.
Solenoid Supply: 3 A max per channel.
Fuse: Type 3 AG, 3 A @ 250 VAC.
Temperature Limits: -40 to 140°F (-40 to 60°C).
Storage Temperature Limits: -40 to 176°F (-40 to 80°C).
On Time: 50 ms to 500 ms.
On Time Accuracy: ±10 ms.
On Time Stability: ±1 ms.
Off Time: 1 second to 180 seconds.
Off Time Accuracy: ±5% of setting.
Weight: 9 oz (255 g).
Compliance: CE, cULus.
*Additional specifications on IOM.

Dwyer

SERIES DCT500ADC

LOW COST TIMER CONTROLLER

For Low Voltage Applications

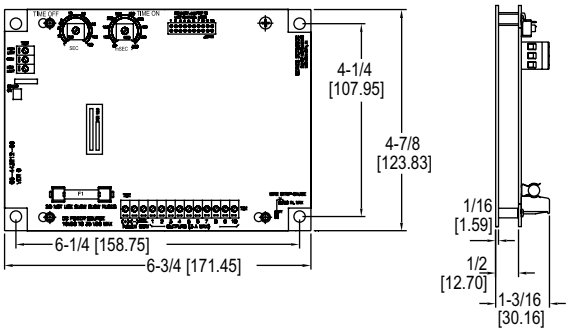

The **Series DCT500ADC Low Cost Timer Controller** is designed to provide continuous or on-demand cleaning for 10-35 V powered receivers and pulse jet systems. It is available in either 4, 6, or 10 channels, and each unit is the same size, minimizing enclosure space and reducing overall system installation cost. For added safety, the control circuitry including the control inputs are isolated from the line voltage.

BENEFITS/FEATURES

- Easy to mount panel versions reducing installation time
- Built in wire strip gauge for ease of installation
- Optional weather proof housing for harsh environments

APPLICATIONS

- Dust collection
- Pneumatic conveying
- Cement batch plants

MODEL CHART

Model	Description	No. of Channels
DCT504ADC	Timer controller	4
DCT506ADC	Timer controller	6
DCT510ADC	Timer controller	10

OPTIONS

To order add suffix:	Description
-L	Mounting bracket for field retrofits: 8-1/4″ x 6-1/4″ (209.55 mm x 158.75 mm)
-WP	Weatherproof housing: standard models Weatherproof housing: with option -L mounting bracket

SPECIFICATIONS*

Output Channels: 4, 6, and 10 channels.
Power Requirements: 10-35 VDC.
Power Consumption: 0.6 W.
Solenoid Supply: 3 A max per channel.
Fuse: Type 3 AG, 3 A @ 250 VAC.
Temperature Limits: -40 to 140°F (-40 to 60°C).
Storage Temperature Limits: -40 to 176°F (-40 to 80°C).
On Time: 50 ms to 500 ms.
On Time Accuracy: ±10 ms.
On Time Stability: < ±1 ms.
Off Time: 1 s to 180 s.
Off Time Accuracy: ±5% of setting.
Weight: 9 oz (255 g).
Compliance: CE.

*Additional specifications on IOM.

TIMER CONTROLLERS

With Universal Power For Both 120 and 220 VAC

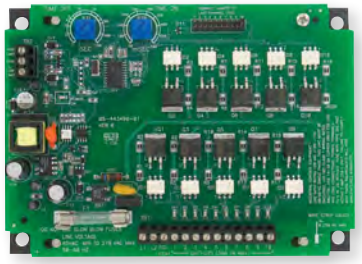

4 thru 10 channel board

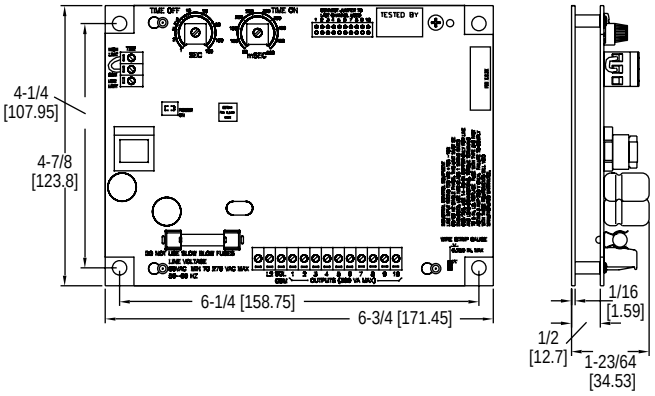

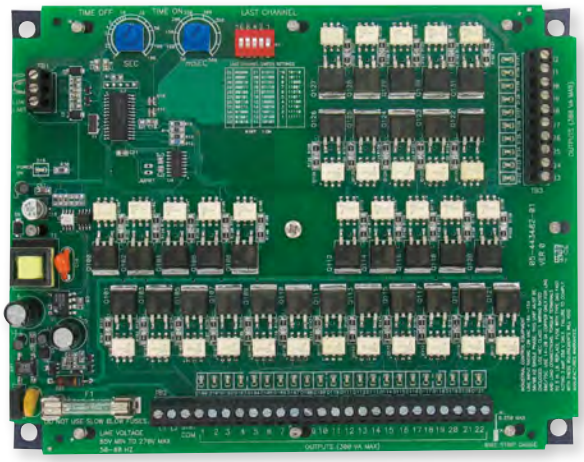

22 and 32 channel board

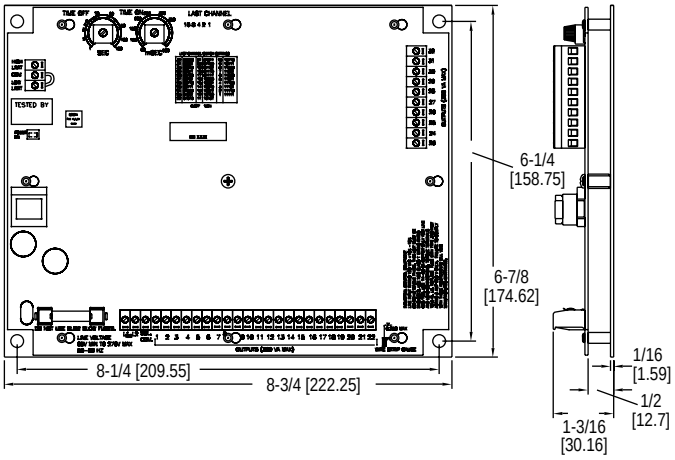

The **Series DCT600 Timer Controllers** are timing systems for pulse-jet type dust collectors or pneumatic conveying systems in either continuous or on-demand cleaning applications. It provides either 4, 6, 10, 22, or 32 channels, and if fewer channels are required than is available on the board, a shorting plug or dip switch allows selection of the last used channel. The new enhanced board circuitry of the DCT600 synchronizes the on-time pulse to the power line to achieve a pulse stability of ±1 msec.

BENEFITS/FEATURES

- Better synchronized on-time pulse to the power line for better pulse stability
- Adjustable potentiometers to select time-on and time-off settings
- Simple and easy to use design

APPLICATIONS

- Dust collection
- Pneumatic conveying

MODEL CHART		
Model	**Description**	**No. of Channels**
DCT604	Timer controller	4
DCT606	Timer controller	6
DCT610	Timer controller	10
DCT622	Timer controller	22
DCT632	Timer controller	32

OPTIONS	
To order add suffix:	**Description**
-L	Mounting bracket for field retrofits: 8-1/4″ x 6-1/4″ (209.55 mm x 158.75 mm)
-WP	Weatherproof housing: 4 thru 10 channel only Weatherproof housing: 22 & 32 channels
Note: L mounting bracket available with 4, 6, or 10 channel models only.	

SPECIFICATIONS*
Output Channels: 4, 6, 10, 22 and 32 channels available.
Power Requirements: 85-270 VAC.
Power Consumption: 1.2 W.
Solenoid Supply: 300 VA.
Fuse: Type 3 AG, 3 A @ 250 VAC.
Temperature Limits: -40 to 140°F (-40 to 60°C).
Storage Temperature Limits: -40 to 176°F (-40 to 80°C).
On Time: 50 ms to 500 ms.
On Time Accuracy: ±5% of setting.
On Time Stability: ±1 ms.
Off Time: 1 s to 180 s.
Off Time Accuracy: 5% of setting.
Weight: 9 oz (255 g).
Compliance: CE, cULus.
*Additional specifications on IOM.

Dwyer

SERIES DCT1000

DUST COLLECTOR TIMER CONTROLLER

Modular Design, User Friendly, Up to 22 Channels

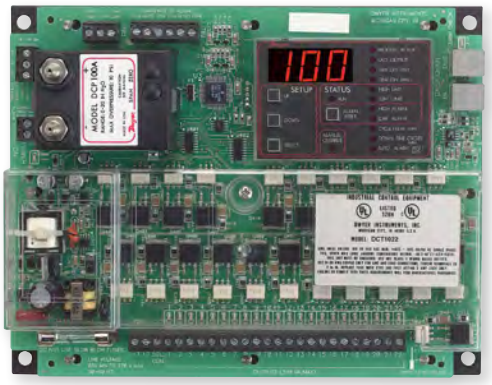

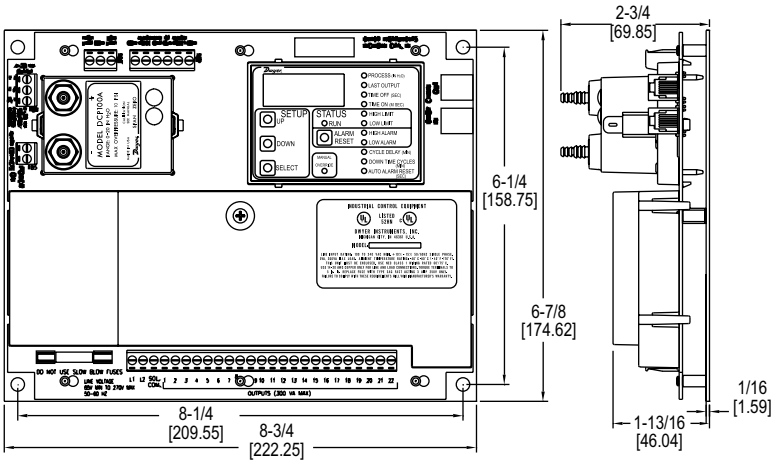

The **Series DCT1000 Dust Controller Timer Controller** simplifies on-demand cleaning requirements by eliminating the need for external devices such as pressure switches, relays, and timers. The modular design allows for use as a continuous cleaning control or on-demand cleaning control using the optional plug-in pressure module. The DCT1000 is the same size for 6, 10, and 22 channels, allowing one board size to be the standard on one enclosure.

BENEFITS/FEATURES

- Universal power requirements for both domestic and overseas use
- Standard mounting holes to other dust collector controllers for use in existing installations
- Able to automatically detect any channel expander connected

APPLICATIONS

- Dust collection
- Pneumatic conveying

MODEL CHART			
Model	**Description**	**No. of Channels**	**D.P. Range**
DCT1022	Master controller	22	-
DCT1010	Master controller	10	-
DCT1006	Master controller	6	-
DCT1122	Channel expander	22	-
DCT1110	Channel expander	10	-
DCP200A	Pressure module	-	20 in w.c.
DCP100A	Pressure module	-	10 in w.c.

OPTIONS	
To order add suffix:	**Description**
-EXPL	Explosion-proof housing
-WP	Weatherproof housing only
-WPP	Weatherproof housing with pressure ports
-WPPS	Weatherproof housing with pressure ports, three position rotary switch installed
Note: Multiple boards stacked in enclosure.	

ACCESSORIES	
Model	**Description**
DPMA-402	Process indicator
Note: DCA channel expander cable available in 1 ft, 2 ft, and 4 ft lengths.	

SPECIFICATIONS

DCT1000 TIMER CONTROLLER

Output Channels: 6, 10, and 22 channels. Expandable to 255 channels using DCT1122 & DCT1110 channel expander boards.
Power Requirements: 85-270 VAC, 50 or 60 Hz.
Power Consumption: 5 W.
Solenoid Supply: 3 A max per channel.
Fuse: 3 A @ 250 VAC. Low voltage control circuitry is isolated from the line voltage for system safety.
Temperature Limits: -40 to 140°F (-40 to 60°C).
Storage Temperature Limits: -40 to 176°F (-40 to 80°C).
On Time: 10 ms to 600 ms, 10 ms steps.
On Time Accuracy: ±10 ms.
Off Time: 1 s to 255 s, 1 s steps.
Off Time Accuracy: ±1% of the value or ±50 ms, whichever is greater.
Weight: 1 lb 3.0 oz (538.6 g).
Compliance: cULus.

DCP PRESSURE MODULE

Pressure Ranges: 10 in w.c. or 20 in w.c.
Temperature Limits: -40 to 140°F (-40 to 60°C).
Pressure Limit: 10 psi (68.95 kPa). Pressure limit (differential): 10 psi (68.95 kPa).
Accuracy: ±1.5% FS @ 73°F (22.8°C).
Output Signal: 4-20 mA.
Alarm Contacts: 1.5 A inductive load, 3 A resistive load @ 30 VAC or 40 VDC.
Process Connections: Two barbed connections for use with 1/8″ (3.18 mm) or 3/16″ (4.76 mm) ID tubing.
Weight: 5.5 oz (155.9 g).

DCT in optional NEMA 4/4X weatherproof enclosure

DCT in optional Explosion-proof enclosure

DCAC02 cable connection for connecting multiple boards

Master board stacked with channel expander

DUST COLLECTOR TIMER CONTROLLER

For Low Voltage Applications

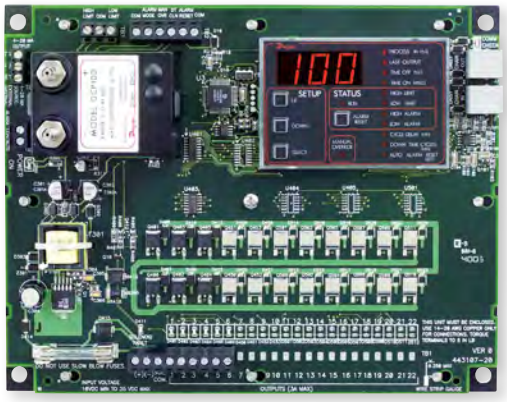

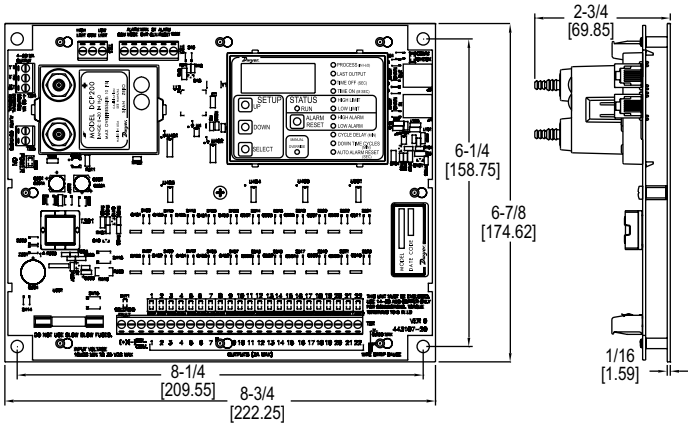

The **Series DCT1000DC Dust Collector Timer Controller** simplifies on-demand cleaning requirements in low voltage applications by eliminating the need for external devices such as pressure switches, relays, and timers. The modular design allows for use as a continuous cleaning control or on-demand cleaning control using the optional plug-in pressure module. The DCT1000 is the same size for 6, 10, and 22 channels, allowing one board size to be the standard on one enclosure.

BENEFITS/FEATURES

- 10-30 VDC power requirement for low voltage applications
- Standard mounting holes to other dust collector controllers for use in existing installations
- Able to automatically detect any channel expander connected

APPLICATIONS

- Dust collection
- Pneumatic conveying

MODEL CHART			
Model	**Description**	**No. of Channels**	**D.P. Range**
DCT1022DC	Master controller	22	-
DCT1010DC	Master controller	10	-
DCT1006DC	Master controller	6	-
DCP200A	Pressure module	-	20 in w.c.
DCP100A	Pressure module	-	10 in w.c.

OPTIONS	
To order add suffix:	**Description**
-EXPL	Explosion-proof housing
-WP	Weatherproof housing only
-WPP	Weatherproof housing with pressure ports
-WPPS	Weatherproof housing with pressure ports, three position rotary switch installed

ACCESSORIES	
Model	**Description**
DPMA-402	Process indicator

SPECIFICATIONS

DCT1000DC TIMER CONTROLLER

Output Channels: 6, 10, and 22 channels.
Power Requirements: 10-30 VDC.
Solenoid Supply: 3 A maximum per channel.
Fuse: 3 A @ 250 VAC.
Temperature Limits: -40 to 140°F (-40 to 60°C).
Storage Temperature Limits: -40 to 176°F (-40 to 80°C).
On Time: 10 ms to 600 ms, 10 ms steps.
On Time Accuracy: ±10 ms.
Off Time: 1 s to 255 s, 1 s steps.
Off Time Accuracy: ±1% of the value or ±50 ms, whichever is greater.
Weight: 1 lb 3.0 oz (538.6 g).

DCP PRESSURE MODULE

Pressure Ranges: 10 in w.c. or 20 in w.c.
Temperature Limits: -40 to 140°F (-40 to 60°C).
Pressure Limit: 10 psi (68.95 kPa).
Pressure Limit (differential): 10 psi (68.95 kPa).
Accuracy: ±1.5% FS @ 73°F (22.8°C).
Output Signal: 4-20 mA.
Alarm Contacts: 1.5 A inductive load, 3 A resistive load @ 30 VAC or 40 VDC.
Process Connections: Two barbed connections for use with 1/8″ (3.18 mm) or 3/16″ (4.76 mm) ID tubing.
Weight: 5.5 oz (155.9 g).
Compliance: CE.

DCT in optional NEMA 4/4X weatherproof enclosure

DCT in optional Explosion-proof enclosure

Dwyer

SERIES PMT2

PARTICULATE TRANSMITTER

Digital Damping, Non-Stick Probe, For Broken Bag Detection

THREADED MOUNT	
Probe Length	A in [mm]
3″	3 [76.20]
5″	5 [127.00]
10″	10 [254.00]
15″	15 [381.00]
20″	20 [508.00]
30″	30 [762.00]
36″	36 [914.40]

1.5″ TRI-CLAMP MOUNT		
Probe Length	A in [mm]	B in [mm]
3″	3-1/2 [88.90]	1-25/32 [45.24]
5″	5-1/2 [139.70]	3-25/32 [96.04]
10″	10-1/2 [266.70]	8-25/32 [223.04]
15″	15-1/2 [393.70]	13-25/32 [350.04]
20″	20-1/2 [520.70]	18-25/32 [477.04]
30″	30-1/2 [744.70]	28-25/32 [731.04]
36″	36-1/2 [927.10]	34-25/32 [883.44]

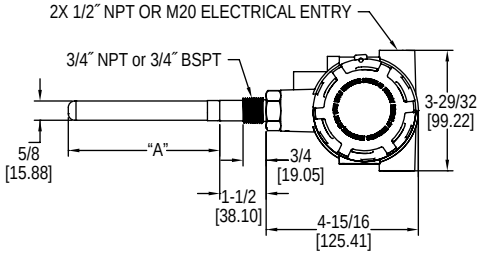

3/4″ male NPT or 3/4″ male BSPT mount

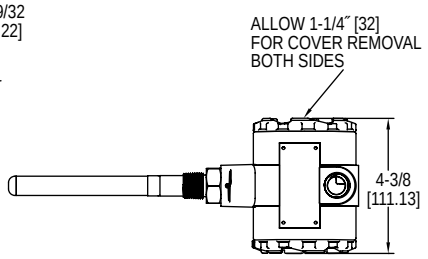

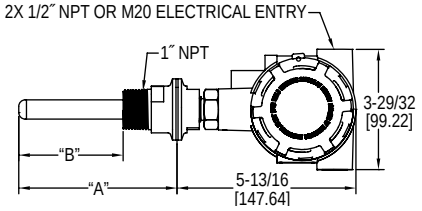

1.5″ tri-clamp option mount

The **Series PMT2 Particulate Transmitter** is designed to measure particulate emission levels from dust collector discharge. Using DC coupled electrostatic induction sensing technology, the transmitter monitors a pA current that is generated as particulate passes near the probe; a 4-20 mA signal will vary based on the particulate level. The PMT2 offers 6 sensitivity ranges allowing the user to choose the range that will best fit the application. The range and test selector switch can also be set to output a 4 mA or 20 mA signal to assist with set up or trouble shooting. Averaging time setting can be used to dampen the signal if desired.

BENEFITS/FEATURES

- Simple 2-wire installation for PLC and control panels
- Non-stick PTFE coated probe to prevent false readings from moist and conductive dusts, condensate, and dust buildup
- Remote zero calibration helps to decrease maintenance time

APPLICATIONS

- Emissions monitoring
- Broken bag detection in dust collectors
- Filter leak or wear detection
- Bin vent monitoring

SPECIFICATIONS

Service: Air and compatible gases, any type of particulate conductive or non-conductive.
Wetted Materials: 316L SS, silicone, and PTFE.
Enclosure: Powder coated aluminum.
Accuracy: ±5% of reading.
Particulate Size: 0.3 microns and higher.
Detection Range: 5 to 5000 pA (6 selectable range options).
Temperature Limits: Ambient: -40 to 145°F (-40 to 63°C); Process: -40 to 248°F (-40 to 120°C).
Pressure Limit: 30 psi (2 bar).
Output Signal: 4-20 mA.
Power Requirements: 12-28 VDC (⎓).
Electrical Connection: Two 1/2″ female NPT electrical entries or two M20 electrical entries (A2 suffix only).
Terminal Block: Removable (16 to 20 AWG wire).
Process Connection: See model chart. BSPT process connections are not UL listed.
Probe Lengths: See model chart.
Enclosure Rating: UL Type 4 (IP66) ATEX/IECEx IP65.
Mounting Orientation: Any.
Averaging Time: 1 to 360 s (10 selectable options).
Weight: Varies with length of probe and type of mount.
Compliance: CE, cULus; ATEX Compliant: CE 2813 Ex II 1 G Ex ia IIB T4 GA (-40°C ≤ Tamb ≤ 63°C) (-40°C ≤ $T_{Process}$ ≤ 120°C) / II 1 D Ex ia IIIC T120°C Da (-40°C ≤ Tamb ≤ 63°C) (-40°C ≤ $T_{Process}$ ≤ 120°C). Type Certificate No.: DEMKO 16ATEX1768 X. ATEX Standards: EN 60079-0:2012/A11:2013; EN 60079-11:2012. IECEx Certified: Ex ia IIB T4 Ga (-40°C ≤ Tamb ≤ 63°C) (-40°C ≤ $T_{Process}$ ≤ 120°C) / Ex ia IIIC T120°C Da (-40°C ≤ Tamb ≤ 63°C) (-40°C ≤ $T_{Process}$ ≤ 120°C). Certificate of Conformity: IECEx UL 16.013X. IECEx Standards: IEC 60079-0: 2011; IEC 60079-11: 2011. UL Listed Intrinsically Safe for Class I, Groups C and D; Class II, Groups E, F and G; Class III; Class I Zone 0 AEx ia IIB T4 Ga; Class I Zone 0 Ex ia IIB T4 Ga.

MODEL CHART

Example	PMT2	-05	-A	-U2		PMT2-05-A-U2
Series	PMT2					Particulate transmitter
Probe Length		03				3″ probe length
		05				5″ probe length
		10				10″ probe length
		15				15″ probe length
		20				20″ probe length
		30				30″ probe length
		36				36″ probe length
Process Connection			A			3/4″ male NPT
			B			1.5″ tri-clamp kit with 1″ male NPT
			C			3/4″ male BSPT
Enclosure Rating				A2		ATEX and IECEx (IS)
				U2		UL (IS)*
Options					M2	Female M20 electrical entries (female 1/2″ NPT standard)
					ST	Stainless steel tag

*Options that do not have ATEX or IECEx.
Attention: Units without the A2 suffix are not Directive 2014/34/EU (ATEX) compliant. These Units are not intended for use in potentially hazardous atmospheres in the EU. These unites may be CE marked for other Directives of the EU.

ACCESSORIES

Model	Description
A-PMT2-FLG	2″ flange with 3/4″ NPT female connection, 316 SS
A-PMT2-M20	1/2″ NPT to M20 conduit adaptor

Dwyer

SERIES CSE-3R

GALVANNEALED STEEL ENCLOSURES

Wall Mounted, NEMA 3R, UL Approved

Enclosure

Sub-panel

Mounting strap

Drip shield

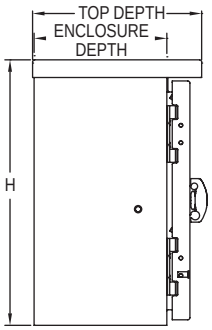

Left side view

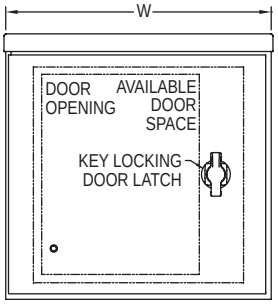

Front view

VIDEO ONLINE

The **Series CSE-3R Galvannealed Steel Enclosures** are spot-welded, wall mounted enclosures designed to house electrical controls, instruments, and components in an outdoor environment. These units are made of carbon steel, NEMA 3R outdoor environment rated and carry a UL approval.

BENEFITS/FEATURES

- Easy instrumentation access with 180° rotating concealed hinges
- Built-in safety with quarter turn latch that can be opened/closed with a screwdriver, and ground studs on the door and body
- Versatile mounting using holes on the back of the enclosure
- Units stay protected from rain, sleet, and snow with rain cap and oil resistant door gasket

APPLICATIONS

- HVAC indoor applications
- Housing general controls and gages

SPECIFICATIONS

Materials: Galvannealed steel enclosure; All other components: Carbon steel.
Rating: NEMA 3R (IP32).
Dimensions: See chart for enclosure dimensions; Sub-panel height = enclosure height - 3″ (76 mm); Sub-panel width = enclosure width - 3″ (76 mm); Mounting strap width = enclosure width - 4″ (102 mm); Drip shield width = enclosure width.
Thickness: 0.048″ (1.22 mm) for drip shields; 0.060″ (1.52 mm) for enclosures < 24″ wide; 0.075″ (1.91 mm) for enclosures ≥ 24″ wide; 0.125″ (3.18 mm) for sub-panels; 0.078″ (1.98 mm) for mounting straps.
Weight: See chart.
Agency Approvals: CSA, cULus. (Meets the technical requirements of EU Directive 2011/65/EU (RoHS II).

MODEL CHART

Enclosure* Model	Height in (cm)	Width in (cm)	Depth in (cm)	Weight lb (kg)	Sub Panel* Model	Weight lb (kg)	Mounting Strap* Model	Weight lb (kg)	Drip Shield* Model	Weight lb (kg)
CSE-3R-161206	16 (41)	12 (30)	6 (15)	16 (7)	**A-SSE-P-1612**	4 (1.8)	**A-CSE-3M-12**	2 (0.9)	**A-CSE-D-12**	2 (0.9)
CSE-3R-201606	20 (51)	16 (41)	6 (15)	25 (11)	**A-SSE-P-2016**	8 (3.6)	**A-CSE-3M-16**	2 (0.9)	**A-CSE-D-16**	2 (0.9)
CSE-3R-242006	24 (61)	20 (51)	6 (15)	32 (15)	**A-SSE-P-2420**	14 (6.4)	**A-CSE-3M-20**	3 (1.4)	**A-CSE-D-20**	3 (1.4)
CSE-3R-302408	30 (76)	24 (61)	8 (20)	60 (27)	**A-SSE-P-3024**	22 (10)	**A-CSE-3M-24**	4 (1.8)	**A-CSE-D-24**	4 (1.8)
CSE-3R-362408	36 (91)	24 (61)	8 (20)	62 (28)	**A-SSE-P-3624**	27 (12.2)			**A-CSE-D-30**	4 (1.8)
CSE-3R-363008	36 (91)	30 (76)	8 (20)	70 (32)	**A-SSE-P-3630**	34 (15.4)				

*For additional sizes contact factory.

ACCESSORIES

Model	Description
A-CSE-K	Replacement keys, includes 2 keys
A-CSE-L	Keylocking wing knob door latch, Includes 1 lock and 2 keys

A-CSE-L

Dwyer

SERIES CSE-KN

CARBON STEEL ENCLOSURES

Wall Mounted, General Purpose Enclosure, UL Approved

Enclosure

Mounting strap

Perforated sub-panel

Full sub-panel

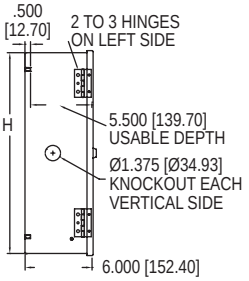

Left side view

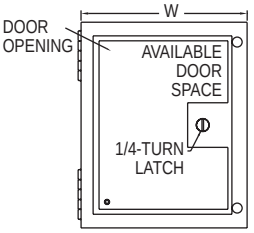

Front view

The **Series CSE-KN Carbon Steel Enclosures** are spot-welded, wall mounted, general purpose enclosures designed to house electrical controls, instruments, and components in general purpose areas. The Series CSE-KN also includes knockouts to allow cords to pass easily into the unit.

BENEFITS/FEATURES

- The door features hinges that allow 180° of rotation for easy instrumentation access
- Quarter turn latch can easily opened or closed with a screwdriver
- Included ground stud for easy electrical grounding
- Mounting holes included on the back of the enclosure allow for versatile mounting and standoffs provide easy installation of optional sub-panels
- Each unit offers optional solid or perforated sub-panel and mounting straps for easy instrument mounting
- The CSE-KN series includes a sub-panel with a 2″ x 2″ (50.8 mm x 50.8 mm) mounting grid mounted on standoffs and lock with keys

APPLICATIONS

- HVAC indoor applications
- Housing general controls and gages
- Securing instrumentation and avoiding tampering

SPECIFICATIONS

Materials: Carbon steel.
Rating: NEMA 1.
Dimensions: See chart.
Thickness: 0.060″ (1.52 mm) for enclosures <24″ wide; 0.075″ (1.91 mm) for enclosures ≥ 24″ wide; 0.060″ (1.52 mm) for perforated sub-panels; 0.075″ (1.91 mm) for solid sub-panels; 0.078″ (1.98 mm) for mounting straps.
Weight: See chart.
Agency Approvals: CSA, cULus. (Meets the technical requirements of EU Directive 2011/65/EU (RoHS II).

MODEL CHART

Mounting Strap* Model	Width in (cm)	Weight lb (kg)
A-CSE-1M-08	7.1 (18)	1 (0.5)
A-CSE-1M-10	9.1 (23)	1 (0.5)
A-CSE-1M-12	11.1 (28)	1 (0.5)
A-CSE-1M-16	15.1 (38)	2 (0.9)
A-CSE-1M-20	19.1 (49)	2 (0.9)
A-CSE-1M-24	23.1 (59)	3 (1.4)

*For additional sizes contact factory.

MODEL CHART

Enclosure Model	Height in (cm)	Width in (cm)	Depth in (cm)	Weight lb (kg)	Mounting Strap Model	Width in (cm)	Weight lb (kg)
CSE-KN-181606	18 (46)	16 (41)	6 (15)	22 (10)	**A-CSE-1M-16**	15.1 (38)	2 (0.9)
CSE-KN-242006	24 (61)	20 (51)	6 (15)	35 (16)	**A-CSE-1M-20**	19.1 (49)	2 (0.9)
CSE-KN-362406	36 (91)	24 (61)	6 (15)	58 (26)	**A-CSE-1M-24**	23.1 (59)	3 (1.4)

ACCESSORIES

Model	Description
A-CSE-K	Replacement keys, includes 2 keys
A-CSE-L	Keylocking wing knob door latch, includes 1 lock and 2 keys

A-CSE-L

SELECTION GUIDE
pages 378-381

TYPICAL APPLICATIONS
page 382

TECHNICAL INFORMATION
page 383

Valves, Ball, Automated
pages 384-400, 404-412

Valves, Ball, Manual
pages 401-403

Valves, Butterfly, Manual
page 413

Valves, Butterfly, Automated
pages 414-415

Actuators
pages 416-417

Valves, Globe
pages 418-421, 430

Valves, Solenoid
pages 422-425

Valves, Diaphragm Pulse
pages 426-427

Bulk Head Connectors
page 428

Valves, Check
page 428

Valves, Needle
page 429

Strainers
page 430

Manifolds
pages 431-432

Position Indicators/ Switches/Transmitters
pages 433-438

Current to Pressure Transducers
pages 439-441

Positioners
pages 442-444

Volume Boosters
page 445

Regulators
page 446

FEATURED PRODUCTS

LUG OR WAFER STYLE BUTTERFLY VALVE

SERIES WE20 | pages 414-415

- Capable of being configured with various actuators and accessories to fit any application
- Limit switches and position indicators can be mounted to manual valves for remote monitoring

QUICK-VIEW® VALVE POSITION INDICATORS/SWITCHES

SERIES QV | pages 433

- Low cost position indication for rotary or linear valves
- Compact design, UL/CSA rated and stocked for fast delivery

Dwyer

2-WAY
Automated Ball Valves

SERIES	WE01 - pages 384-385	WE08 - pages 386-387	WE02 - pages 388-389	WE03 - pages 390-391
				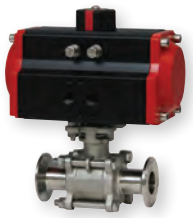
Body Type	2-way 2-piece	2-way 2-piece	2-way 3-piece	2-way 3-piece
Body Material	316 SS	Brass	316 SS	316 SS
Line Sizes	1/2 to 3″	1/2 to 2″	1/2 to 3″	1/2 to 2″
End Connections	Female NPT	Female NPT	Female NPT	Tri-clamp

3-WAY
Automated Ball Valves

SERIES	WE31 - pages 404-405	WE35 - pages 406-407	WE33 - pages 408-409	WE34 - pages 410-411
Body Type	3-way	3-way	3-way	3-way
Body Material	316 SS	Brass	316 SS	316 SS
Line Sizes	1/2 to 2″	1/2 to 2″	1/2 to 2″	1/2 to 3″
End Connections	Female NPT	Female NPT	Tri-clamp	Flange

These Selection Guides are for quick comparison of similar products. Please refer to the catalog page number referenced for complete product information and specifications.

2-WAY
Automated Ball Valves

SERIES	**WE04** - pages 392-393	**WE05** - pages 394-395	**WE06** - pages 396-397	**WE07** - pages 398-399
Body Type	2-way 2-piece	2-way 3-piece	2-way 3-piece V-ball	2-way 2-piece V-ball
Body Material	316 SS	316 SS	316 SS	316 SS
Line Sizes	1/2 to 3″	1/2 to 3″	1/2 to 3″	1/2 to 3″
End Connections	Flange	Socket weld	Female NPT	Flange

POSITIONERS

SERIES	**165 & 265** - pages 442-443	**185 & 285** - page 444
Body Material	Aluminum or 316 SS	Aluminum or 316 SS
Stroke	0.5 to 6″ or 0 to 90°	0.5 to 6″ or 0 to 90°
Air Supply	20 to 101 psig	35 to 116 psi
Enclosure Rating	IP66	NEMA 4X

These Selection Guides are for quick comparison of similar products. Please refer to the catalog page number referenced for complete product information and specifications.

Dwyer

HAND LEVER
Ball Valves

SERIES	DBV - page 401	BV2M - page 401	DBVL - page 402	SWBV - page 402
Body Type	2-way	2-way	2-way	2-way
Body Material	Brass	CF8M	Low lead brass	Brass
Line Sizes	1/4 to 3″	1/4 to 3″	1/4 to 3″	1/4 to 3″
End Connections	Female NPT	Female NPT	Female NPT	Sweat

POSITION INDICATORS/SWITCHES/TRANSMITTERS

SERIES	QV - page 433	Mark 1 - pages 434-436	Mark 3 - pages 434-436
Type	Thru-shaft	Magnetic drive	Magnetic drive
Rotation Travel	5 to 360° (switches only)	0 to 340°	1 to 25 revolutions
Enclosure Material	Polycarbonate	Aluminum or 316 SS	Aluminum or 316 SS
Enclosure Rating	NEMA 4, 4X	NEMA 1, 2, 3, 3R, 3S, 4, 4X, 6, 7, 9, 12, & 13	NEMA 1, 2, 3, 3R, 3S, 4, 4X, 6, 7, 9, 12, & 13

These Selection Guides are for quick comparison of similar products. Please refer to the catalog page number referenced for complete product information and specifications.

HAND LEVER
Ball Valves

SERIES	UBV - page 402	MV - page 403	SMV2 - page 403
Body Type	Uni-flange	2-way	2-way
Body Material	Brass	Chrome-plated brass	SS
Line Sizes	1/2 to 1″	1/8 to 1/2″	1/8 to 1/2″
End Connections	Female NPT	Female x female NPT or Male x female NPT	Female x female NPT or Male x female NPT

POSITION INDICATORS/SWITCHES/TRANSMITTERS

SERIES	Mark 4 - pages 434-436	VPS - page 437	DT - page 438
Type	Thru-shaft	Dual Inductive	Magnetic Point Sensor
Rotation Travel	0 to 340°	N/A	N/A
Enclosure Material	Aluminum or 316 SS	Polybutylene Terephthalate	SS
Enclosure Rating	NEMA 1, 2, 3, 3R, 3S, 4, 4X, 6, 7, 9, 12, & 13	N/A	Designed to NEMA 1, 3, 4, 4X, 6, 7, 9, 12 & 13

These Selection Guides are for quick comparison of similar products. Please refer to the catalog page number referenced for complete product information and specifications.

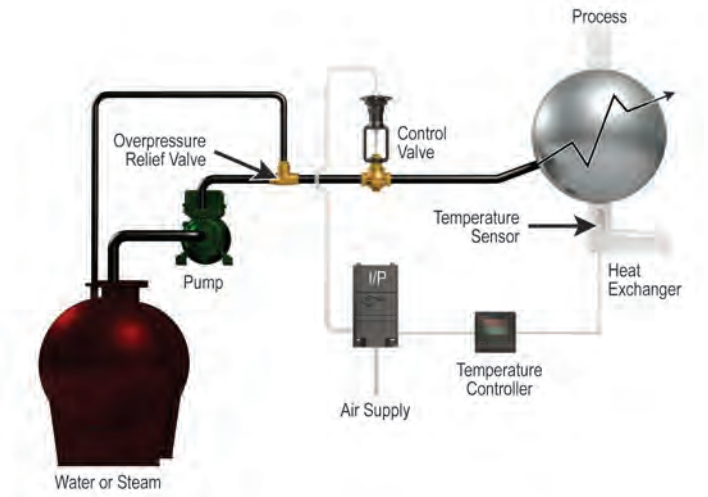

Process temperature control using pneumatic Hi-Flow™ control valves

Pneumatic Hi-Flow™ control valves provide excellent control with high flow, wide rangeability and tight shutoff capabilities. The dispensing application shown uses a Lin-E-Aire® pneumatic actuator, operating off standard 3-15 psi control air signals, and a Hi-Flow™ linear control valve that apportions steam or water to a user process. The valve regulates cooling water or steam flow depending on the process requirement resident in the temperature controller program. This package can be provided with a Precisor® positioner and Proximity® position transmitter which provides an excellent process control application problem solution.

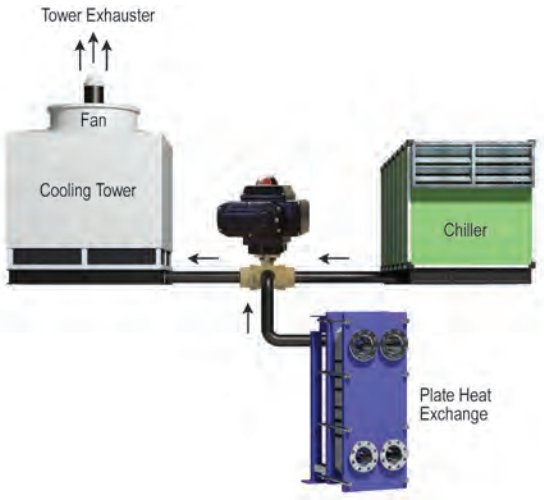

Water-side economizer system includes Series WE31 3-way ball valve for accurate control of flow

To ensure efficient utilization of cold water in HVAC systems, WE31 3-way ball valves are called upon to modulate flow. This common "water-side economizer" allows water from the plate heat exchanger to be diverted directly to the cooling tower if the temperature is cool enough, instead of coming directly from the condenser on the chiller.

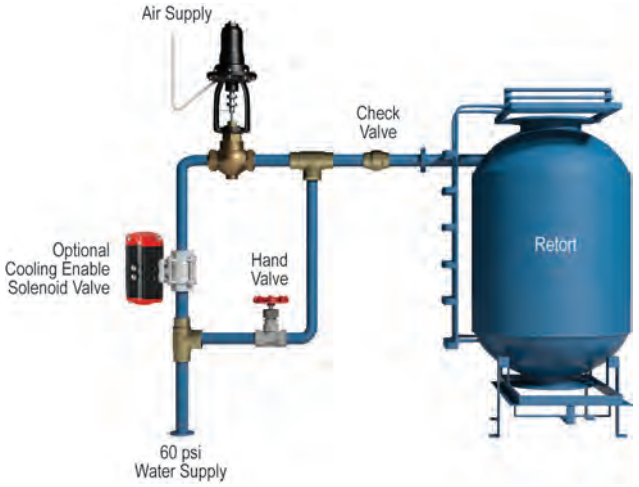

Quick response Hi-Flow™ valves control water flow in cooling process

Dependable W.E. Anderson™ Hi-Flow™ control valves with Lin-E-Aire® air-to-raise actuators combine to provide unsurpassed water flow management. This retort system employs the Hi-Flow™ valve because of its excellent control capabilities, which are necessary for this application. After the cooking process, the valve is opened slowly. Once the desired temperature has been reached, the supply is shut off and any additional cooling is done by use of the hand valve.

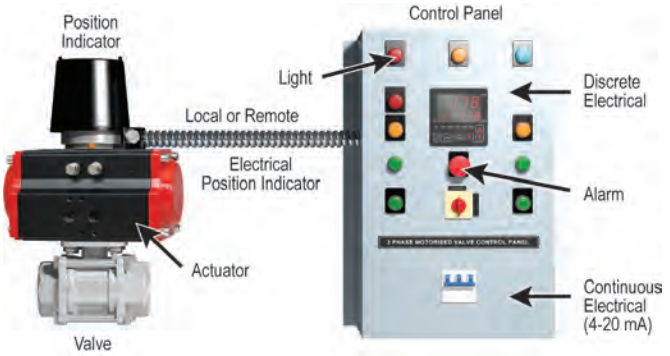

Proximity® Mark Series valve position indicator is perfect for valve position indication on offshore oil rigs

Proximity® Mark Series position indicator is utilized in valve automation packages in harsh environments. The Mark Series mounts onto the top of rotary valve actuators and connects to the actuator shaft or attaches to the shaft of a linear valve for indicating valve position. Standard with the Mark Series is visual position indication with "OPEN", "CLOSED", and degree position status. The Mark Series is available with continuous position retransmission with a 4-20 mA output and up to six adjustable position indication switches for remote indication of valve status. Remote status transmitter is used for indication of exact valve position and switches provide discrete indication of valve open and closed status in the control room. The Mark Series is perfect for this application because of the 316 SS enclosure that withstands the sea spray environment, and the magnetic drive mechanism that completely seals the switch cavity from the environment.

VALVE TECHNICAL INFORMATION

TERMINOLOGY

- **Pressure Drop –** The difference in upstream and downstream pressures of the fluid flowing through the valve.
- **Critical Flow –** The flow has reached the point of being choked. At the choked condition the flow rate has hit a maximum limit and does not increase with further increase in pressure drop across the valve.
- **Cv or Valve Flow Coefficient –** The number of U. S. gallons per minute of water at 60°F that will pass through the valve with a pressure drop of 1 psi. For example, a Hi-Flow™ valve with a maximum C_v of 10.75 has an effective port area in the full open position such that it passes 10.75 GPM of water with a pressure drop of 1 psi.
- **Full Port –** The port diameter of the valve is the same diameter as the piping connections.
- **Rangeability –** The ratio of maximum controllable flow to minimum controllable flow of a valve. For example, a valve with a 50 to 1 rangeability and a total flow capacity of 100 GPM at full open controls flow accurately to as low as 2 GPM.
- **Valve Flow Characteristic –** The relationship between the stem travel or rotation of a valve, expressed in percent travel, and the fluid flow through the valve, expressed in percent of full flow.

CONTROL VALVE SIZING

VIDEO ONLINE

The C_v method is an accepted way to size control valves. Basic equations are provided as a guide to use in sizing a control valve, and the results of the equations will only be as accurate as the information provided of the flowing conditions. The equations are broken down into the type of media - liquid, gas or steam, and whether or not the flow is critical. The critical flow equations are to be used for vapor flow when the pressure drop across the valve is greater than half of the upstream pressure. As a general guide to avoid cavitation do not size a valve for liquid service where the pressure drop is greater than 50% of the upstream pressure.

CONTROL VALVE ACTUATOR SIZING

VIDEO ONLINE

CONTROL VALVE FLOW

VIDEO ONLINE

NOMENCLATURE

C_v = Valve flow coefficient

g = Specific gravity of liquid at flowing conditions

G = Specific gravity of gas at flowing conditions

P_1 = Upstream pressure, psia

P_2 = Downstream pressure, psia

ΔP = Actual pressure drop (P_1-P_2), psi

q = Liquid volumetric flow rate, U.S. GPM

Q = Gas volumetric flow rate, SCFH

W = Steam weight (mass) flow rate, LB/HR

T = Flowing Temperature, °R (460 + °F)

Once the required C_v is determined, selection of the proper size control valve can be obtained by comparing the required C_v to the C_v values for the valve. As a general rule the maximum capacity of a control valve should be 15 to 50% above the maximum process flow, and the minimum required C_v must be within the available rangeability of the valve for proper control. If only the maximum process flow rate was used to calculate C_v, then the percent travel of the valve should be checked and should fall in the range of 65 to 80% of total travel.

SUB-CRITICAL FLOW

Liquid $C_v = q\left(\frac{g}{\Delta P}\right)^{1/2}$

Gas $C_v = \frac{Q}{963}\left(\frac{G \times T}{\Delta P\,(P_1 + P_2)}\right)^{1/2}$

Steam $C_v = \frac{W}{2.1\,[\Delta P\,(P_1 + P_2)]^{1/2}}$

CRITICAL FLOW

Gas or steam where $\Delta P > \frac{P_1}{2}$

$C_v = \frac{Q\,(G \times T)^{1/2}}{750 \times P_1}$

$C_v = \frac{W}{1.65 \times P_1}$

Dwyer

SERIES WE01

2-PIECE NPT STAINLESS STEEL BALL VALVES

Full Port, Vented Ball, Electric or Pneumatic Actuators

WE01-EHD00

WE01-EDA02

WE01-EDA02-AA01

WE01-ETD01-A

WE01-ETI02-A

The **Series WE01 2-Piece NPT Stainless Steel Ball Valves** incorporate a full port valve for great flow rates with minimal pressure drop. The valve features a blowout proof stem for added safety, reinforced PTFE seats and seals for longer life, and a 316 stainless steel (ASTM CF8M) ball for better performance. Actuators are direct mounted creating a compact assembly for tight spaces. Limit switches are able to be mounted directly to the valves allowing for remote position indication.

The Series WE01 can be configured with either an electric or pneumatic actuator. Electric actuators are available in weatherproof or explosion-proof, a variety of supply voltages and two-position or modulating control. Two-position actuators use the supply voltage to drive the valve open or closed, while the modulating actuator accepts a 4-20 mA input for valve positioning. Actuators feature thermal overload protection and permanently lubricated gear train.

The pneumatic double acting actuator uses an air supply to drive the valve open and closed. The actuator has two supply ports, with one driving the valve open and the other driving the valve closed. Spring return pneumatic actuators use the air supply to open the valve and internally loaded springs return the valve to the closed position. Also available is the SN solenoid valve to electrically switch the air supply pressure between the air supply ports for opening and closing the valve. Actuators are constructed of anodized and epoxy coated aluminum for years of corrosion free service.

BENEFITS/FEATURES

- Capable of being configured to fit any application
- Limit switches can be mounted to manual valves for remote monitoring
- Vented ball to reduce operating torque
- Weatherproof or explosion-proof electric actuators
- Double acting or spring return anodized aluminum pneumatic actuators
- Full port design reduces the pressure drop across the valve

APPLICATIONS

- Gas or liquid flow control
- Ideal for quick bubble tight shut-off

SPECIFICATIONS

VALVE

Service: Compatible liquids and gases.
Body: 2-piece.
Line Sizes: 1/2 to 3˝.
End Connections: Female NPT.
Pressure Limits: 28˝ Hg to 1000 psi (-0.7 to 69 bar) up to 250°F.
Wetted Materials: Body and ball: 316 SS (CF8M); Stem: 316 SS; Seat: RTFE/PTFE; Seal; Washer and packing: PTFE.
Temperature Limits: -20 to 392°F (-29 to 200°C).
Other Materials: O-ring: Fluoroelastomer; Handle: 304 SS; Washer: 301 SS; Stem nut, Locking device, Gland ring: 304 SS; Handle sleeve: PVC.
Agency Approvals: Meets the technical requirements of EU Directive 2011/65/EU (RoHS II).

ACTUATORS

Pneumatic "DA" and "SR" Series

Type: DA series is double acting and SR series is spring return (rack and pinion).
Normal Supply Pressure: DA: 40 to 115 psi (2.7 to 7.9 bar); SR: 80 psi (5.5 bar).
Maximum Supply Pressure: 120 psi (8.6 bar).
Air Connections: DA01: 1/8˝ female NPT; DA02 to DA05: 1/4˝ female NPT; SR02 to SR07: 1/4˝ female NPT.
Housing Material: Anodized aluminum body and epoxy coated aluminum end caps.
Temperature Limits: -40 to 176°F (-40 to 80°C).
Accessory Mounting: NAMUR standard.

Electric "TD" and "MD" Series

Power Requirements: 110 VAC, 220 VAC, 24 VAC or 24 VDC (MD models not available in 24 VDC).
Power Consumption: See instruction manual.
Cycle Time (per 90°): TD01 4 s; MD01: 10 s; TD02 and MD02: 20 s; TD03 and MD03: 30 s.
Duty Rating: 85%.
Enclosure Rating: NEMA 4X (IP67).
Housing Material: Powder coated aluminum.
Temperature Limits: -22 to 140°F (-30 to 60°C).
Electrical Connection: 1/2˝ female NPT.
Modulating Input: 4-20 mA.
Standard Features: Manual override, position indicator, and TD models come with two limit switches.

Electric "TI" and "MI" Series

Power Requirements: 110 VAC, 220 VAC, 24 VAC or 24 VDC.
Power Consumption: See instruction manual.
Cycle Time (per 90°): See instruction manual.
Duty Rating: See instruction manual.
Enclosure Rating: NEMA 7, designed to meet hazardous locations: Class I, Group C and D; Class II, Group E, F and G; Division I and II.
Housing Material: Powder coated aluminum.
Temperature Limits: -40 to 140°F (-40 to 60°C).
Electrical Connection: 1/2˝ female NPT.
Modulating Input: 4-20 mA.
Standard Features: Position indicator and two limit switches.

2-PIECE NPT STAINLESS STEEL BALL VALVES

Full Port, Vented Ball, Electric or Pneumatic Actuators

MODEL CHART

Size	Cv (gal/min)	Popular Hand Operated Model	Popular Double Acting Pneumatic Model	Popular Spring Return Pneumatic Model	Popular NEMA 4X Two Position Electric (110 VAC) Model	Popular NEMA 4X Modulating Electric (110 VAC) Model
1/2″	36.64	**WE01-CHD00**	**WE01-CDA01**	**WE01-CSR02**	**WE01-CTD01-A**	**WE01-CMD01-A**
3/4″	67.69	**WE01-DHD00**	**WE01-DDA01**	**WE01-DSR02**	**WE01-DTD01-A**	**WE01-DMD01-A**
1″	110.27	**WE01-EHD00**	**WE01-EDA02**	**WE01-ESR03**	**WE01-ETD01-A**	**WE01-EMD01-A**
1-1/4″	184.73	**WE01-FHD00**	**WE01-FDA02**	**WE01-FSR03**	**WE01-FTD01-A**	**WE01-FMD01-A**
1-1/2″	266.62	**WE01-GHD00**	**WE01-GDA03**	**WE01-GSR04**	**WE01-GTD02-A**	**WE01-GMD01-A**
2″	485.3	**WE01-HHD00**	**WE01-HDA03**	**WE01-HSR05**	**WE01-HTD02-A**	**WE01-HMD02-A**
2-1/2″	791.57	**WE01-IHD00**	**WE01-IDA04**	**WE01-ISR07**	**WE01-ITD03-A**	**WE01-IMD03-A**
3″	1151.95	**WE01-JHD00**	**WE01-JDA05**	**WE01-JSR07**	**WE01-JTD03-A**	**WE01-JMD03-A**

MODEL CHART - HAND OPERATED AND PNEUMATIC ACTUATOR

Example	WE01	-EDA02	-A	A	01		WE01-EDA02-AA01
Series	WE01						316 SS 2-piece NPT
Size and Actuator		CHD00					1/2″ hand operated
		DHD00					3/4″ hand operated
		EHD00					1″ hand operated
		FHD00					1-1/4″ hand operated
		GHD00					1-1/2″ hand operated
		HHD00					2″ hand operated
		IHD00					2-1/2″ hand operated
		JHD00					3″ hand operated
		CDA01					1/2″ double acting
		DDA01					3/4″ double acting
		EDA02					1″ double acting
		FDA02					1-1/4″ double acting
		GDA03					1-1/2″ double acting
		HDA03					2″ double acting
		IDA04					2-1/2″ double acting
		JDA05					3″ double acting
		CSR02					1/2″ spring return
		DSR02					3/4″ spring return
		ESR03					1″ spring return
		FSR03					1-1/4″ spring return
		GSR04					1-1/2″ spring return
		HSR05					2″ spring return
		ISR07					2-1/2″ spring return
		JSR07					3″ spring return
Solenoid			N				No solenoid
			A				NEMA 4X NAMUR solenoid
Solenoid Voltage				N			No solenoid
				A			110 VAC
				B			220 VAC
				C			24 VAC
				D			24 VDC
				E			12 VDC
Positioner and Switches					00		None
					01		42AD0 exp limit switch
					02		45VD0 exp position transmitter
					03		42AD0-B ATEX limit switch
					04		42AD0-IE IECEX limit switch
					06		QV-210101 poly limit switch
					07		VPS and P1 prox switch
					08		265ER-D5 positioner
					09		285ER-D5 smart positioner
Options						NO	Fail open spring return actuator

ACCESSORIES

Model	Description
VB-01	Volume booster

MODEL CHART - ELECTRIC ACTUATOR

Example	WE01	-GMD01	-A	WE01-GMD01-A
Series	WE01			316 SS 2-piece NPT
Size and Actuator		CTD01		1/2″ NEMA 4X two-position
		DTD01		3/4″ NEMA 4X two-position
		ETD01		1″ NEMA 4X two-position
		FTD01		1-1/4″ NEMA 4X two-position
		GTD02		1-1/2″ NEMA 4X two-position
		HTD02		2″ NEMA 4X two-position
		ITD03		2-1/2″ NEMA 4X two-position
		JTD03		3″ NEMA 4X two-position
		CMD01		1/2″ NEMA 4X modulating
		DMD01		3/4″ NEMA 4X modulating
		EMD01		1″ NEMA 4X modulating
		FMD01		1-1/4″ NEMA 4X modulating
		GMD01		1-1/2″ NEMA 4X modulating
		HMD02		2″ NEMA 4X modulating
		IMD03		2-1/2″ NEMA 4X modulating
		JMD03		3″ NEMA 4X modulating
		CTI01		1/2″ exp two-position
		DTI01		3/4″ exp two-position
		ETI02		1″ exp two-position
		FTI02		1-1/4″ exp two-position
		GTI02		1-1/2″ exp two-position
		HTI04		2″ exp two-position
		ITI05		2-1/2″ exp two-position
		JTI06		3″ exp two-position
		CMI01		1/2″ exp electric modulating
		DMI01		3/4″ exp electric modulating
		EMI02		1″ exp electric modulating
		FMI02		1-1/4″ exp electric modulating
		GMI02		1-1/2″ exp electric modulating
		HMI04		2″ exp electric modulating
		IMI05		2-1/2″ exp electric modulating
		JMI06		3″ exp electric modulating
Actuator Voltage			A	110 VAC
			B	220 VAC
			C	24 VAC
			D	24 VDC

REPAIR KIT

Model	Valve Series and Size
VRK-02	WE01-1/2″
VRK-03	WE01-3/4″
VRK-04	WE01-1″
VRK-06	WE01-1-1/2″
VRK-07	WE01-2″
VRK-08	WE01-2-1/2″
VRK-09	WE01-3″

Parts List - Included in Kit

1 PTFE thrust washer
1 FKM O-ring
2 PTFE stem packing
2 PTFE seals
2 RTFE seats

Dwyer

SERIES WE08

2-PIECE NPT BRASS BALL VALVES

Full Port, Vented Ball, Electric or Pneumatic Actuators

WE08-EHD00

WE08-EDA02

WE08-ETD01-A

WE08-ETI02-A

VIDEO ONLINE

The **Series WE08 2-Piece NPT Brass Ball Valves** incorporate a full port 2-piece brass ball valve for great flow rates with minimal pressure drop. The valve features a blowout proof stem for added safety, reinforced PTFE seats and seals for longer life, and a brass ball for better performance. Actuators are direct mounted creating a compact assembly for tight spaces.

The Series WE08 can be configured with either an electric or pneumatic actuator. Electric actuators are available in weatherproof or explosion-proof, a variety of supply voltages, and two-position or modulating control. Two-position actuators use the supply voltage to drive the valve open or closed, while the modulating actuator accepts a 4-20 mA input for valve positioning. Actuators feature thermal overload protection and permanently lubricated gear train.

The pneumatic double acting actuator uses an air supply to drive the valve open and closed. The actuator has two supply ports, with one driving the valve open and the other driving the valve closed. Spring return pneumatic actuators use the air supply to open the valve and internally loaded springs return the valve to the closed position. Also, between the air supply ports for opening and closing the valve, actuators are constructed of anodized and epoxy coated aluminum for years of corrosion free service.

BENEFITS/FEATURES

- Capable of being configured to fit any application
- Limit switches can be mounted to manual valves for remote monitoring
- Vented ball to reduce operating torque
- Weatherproof or explosion-proof electric actuators
- Double acting or spring return anodized aluminum pneumatic actuators
- Full port design reduces the pressure drop across the valve

APPLICATIONS

- Gas or liquid flow control
- Ideal for quick bubble tight shut-off

SPECIFICATIONS

VALVE

Service: Compatible liquids and gases.
Body: 2-piece.
Line Sizes: 1/2 to 2˝.
End Connections: Female NPT.
Pressure Limits: 1/2 to 1˝600 psi (41 bar) WOG; 1-1/4 to 2˝230 psi (15 bar) WOG.
Wetted Materials: Body, ball, and stem: Brass; Seat, seal, and packing: PTFE.
Temperature Limits: -20 to 425°F (-30 to 220°C).
Other Materials: O-ring: NBR; Handle, stem nut, ferrule: SS; Handle sleeve: Vinyl; Body and cap: Nickle plated.
Compliance: Meets the technical requirements of EU Directive 2011/65/EU (RoHS II).

ACTUATORS

Pneumatic "DA" and "SR" Series
Type: DA series is a double acting and SR series is a spring return (rack and pinion).
Normal Supply Pressure: DA: 40 to 115 psi (2.7 to 7.9 bar); SR: 80 psi (5.5 bar).
Maximum Supply Pressure: 120 psi (8.6 bar).
Air Connections: DA02 to DA03: 1/4˝ female NPT; SR02 to SR04: 1/4˝ female NPT.
Housing Material: Anodized aluminum body and epoxy coated aluminum end caps.
Temperature Limits: -40 to 176°F (-40 to 80°C).
Accessory Mounting: NAMUR standard.

Electric "TD" and "MD" Series
Power Requirements: 110 VAC, 220 VAC, 24 VAC, or 24 VDC (MD models not available in 24 VDC).
Power Consumption: See instruction manual.
Cycle Time (per 90°): TD01 4 s; MD01: 10 s; TD02: 20 s).
Duty Rating: 85%.
Enclosure Rating: NEMA 4X (IP67).
Housing Material: Powder coated aluminum.
Temperature Limits: -22 to 140°F (-30 to 60°C).
Electrical Connection: 1/2˝ female NPT.
Modulating Input: 4-20 mA.
Standard Features: Manual override, position indicator, and TD models come with two limit switches.

Electric "TI" and "MI" Series
Power Requirements: 110 VAC, 220 VAC, 24 VAC, 24 VDC.
Power Consumption: See instruction manual.
Cycle Time (per 90°): See instruction manual.
Duty Rating: See instruction manual.
Enclosure Rating: NEMA 7, designed to meet hazardous locations: Class I, group C and D; Class II, group E, F and G; division I and II.
Housing Material: Powder coated aluminum.
Temperature Limits: -40 to 140°F (-40 to 60°C).
Electrical Connection: 1/2˝ female NPT.
Modulating Input: 4-20 mA.
Standard Features: Position indicator and two limit switches.

USA: California Proposition 65
⚠**WARNING:** This product can expose you to chemicals including Lead, which is known to the State of California to cause cancer and birth defects or other reproductive harm. For more information go to www.P65Warnings.ca.gov.

2-PIECE NPT BRASS BALL VALVES

Full Port, Vented Ball, Electric or Pneumatic Actuators

MODEL CHART						
Size	Cv (gal/min)	Popular Hand Operated Model	Popular Double Acting Pneumatic Model	Popular Spring Return Pneumatic Model	Popular NEMA 4X Two Position Electric (110 VAC) Model	Popular NEMA 4X Modulating Electric (110 VAC) Model
1/2″	16	**WE08-CHD00**	**WE08-CDA02**	**WE08-CSR02**	**WE08-CTD01-A**	**WE08-CMD01-A**
3/4″	40	**WE08-DHD00**	**WE08-DDA02**	**WE08-DSR03**	**WE08-DTD01-A**	**WE08-DMD01-A**
1″	65	**WE08-EHD00**	**WE08-EDA02**	**WE08-ESR03**	**WE08-ETD01-A**	**WE08-EMD01-A**
1-1/4″	90	**WE08-FHD00**	**WE08-FDA03**	**WE08-FSR03**	**WE08-FTD01-A**	**WE08-FMD01-A**
1-1/2″	135	**WE08-GHD00**	**WE08-GDA03**	**WE08-GSR03**	**WE08-GTD01-A**	**WE08-GMD01-A**
2″	251	**WE08-HHD00**	**WE08-HDA03**	**WE08-HSR04**	**WE08-HTD02-A**	**WE08-HMD01-A**

MODEL CHART - HAND OPERATED AND PNEUMATIC ACTUATOR							
Example	**WE08**	**-EDA02**	**-A**	**A**	**01**		**WE08-EDA02-AA01**
Series	WE08						Brass 2-piece NPT
Size and Actuator		CHD00					1/2″ hand operated
		DHD00					3/4″ hand operated
		EHD00					1″ hand operated
		FHD00					1-1/4″ hand operated
		GHD00					1-1/2″ hand operated
		HHD00					2″ hand operated
		CDA02					1/2″ double acting
		DDA02					3/4″ double acting
		EDA02					1″ double acting
		FDA03					1-1/4″ double acting
		GDA03					1-1/2″ double acting
		HDA03					2″ double acting
		CSR02					1/2″ spring return
		DSR03					3/4″ spring return
		ESR03					1″ spring return
		FSR03					1-1/4″ spring return
		GSR03					1-1/2″ spring return
		HSR04					2″ spring return
Solenoid			N				No solenoid
			A				NEMA 4X NAMUR solenoid
Solenoid Voltage				N			No solenoid
				A			110 VAC
				B			220 VAC
				C			24 VAC
				D			24 VDC
				E			12 VDC
Positioner and Switches					00		None
					01		42AD0 exp limit switch
					02		45VD0 exp position transmitter
					03		42AD0-B ATEX limit switch
					06		QV-210101 poly limit switch
					07		VPS and P1 prox switch
					08		265ER-D5 positioner
					09		285ER-D5 smart positioner
Options						NO	Fail open spring return actuator

MODEL CHART - ELECTRIC ACTUATOR				
Example	**WE08**	**-GMD01**	**-A**	**WE08-GMD01-A**
Series	WE08			Brass 2-piect NPT
Size and Actuator		CTD01		1/2″ electric two-position
		DTD01		3/4″ electric two-position
		ETD01		1″ electric two-position
		FTD01		1-1/4″ electric two-position
		GTD01		1-1/2″ electric two-position
		HTD02		2″ electric two-position
		CMD01		1/2″ electric modulating
		DMD01		3/4″ electric modulating
		EMD01		1″ electric modulating
		FMD01		1-1/4″ electric modulating
		GMD01		1-1/2″ electric modulating
		HMD01		2″ electric modulating
		CTI01		1/2″ exp electric two-position
		DTI01		3/4″ exp electric two-position
		ETI02		1″ exp electric two-position
		FTI02		1-1/4″ exp electric two-position
		GTI02		1-1/2″ exp electric two-position
		HTI03		2″ exp electric two-position
		CMI01		1/2″ exp electric two-position
		DMI01		3/4″ exp electric two-position
		EMI02		1″ exp electric two-position
		FMI02		1-1/4″ exp electric two-position
		GMI02		1-1/2″ exp electric two-position
		HMI03		2″ exp electric two-position
Actuator Voltage			A	110 VAC
			B	220 VAC
			C	24 VAC
			D	24 VDC

USA: California Proposition 65
⚠**WARNING:** This product can expose you to chemicals including Lead, which is known to the State of California to cause cancer and birth defects or other reproductive harm. For more information go to www.P65Warnings.ca.gov.

Dwyer

SERIES WE02

3-PIECE NPT STAINLESS STEEL BALL VALVES

Full Port, Vented Ball, Electric or Pneumatic Actuators

WE02-DHD00

WE02-DDA01-AA01

WE02-CTI01-A

WE02-DDA01

WE02-DTD01-A

The **Series WE02 3-Piece NPT Stainless Steel Ball Valves** incorporate a full port valve for great flow rates with minimal pressure drop. The valve features a blowout proof stem for added safety, reinforced PTFE seats and seals for longer life, and a 316 stainless steel (ASTM CF8M) ball for better performance. Actuators are direct mounted creating a compact assembly for tight spaces. Limit switches are able to be mounted directly to the valves allowing for remote position indication.

The Series WE02 can be configured with either an electric or pneumatic actuator. Electric actuators are available in weatherproof or explosion-proof, a variety of supply voltages and two-position or modulating control. Two-position actuators use the supply voltage to drive the valve open or closed, while the modulating actuator accepts a 4-20 mA input for valve positioning. Actuators feature thermal overload protection and permanently lubricated gear train.

The pneumatic double acting actuator uses an air supply to drive the valve open and closed. The actuator has two supply ports, with one driving the valve open and the other driving the valve closed. Spring return pneumatic actuators use the air supply to open the valve, and internally loaded springs return the valve to the closed position. Also available is the SN solenoid valve to electrically switch the air supply pressure between the air supply ports for opening and closing the valve. Actuators are constructed of anodized and epoxy coated aluminum for years of corrosion free service.

BENEFITS/FEATURES

- Capable of being configured to fit any application
- Limit switches can be mounted to manual valves for remote monitoring
- Vented ball to reduce operating torque
- Weatherproof or explosion-proof electric actuators
- Double acting or spring return anodized aluminum pneumatic actuators
- 3-piece design for each replacement of seals
- Full port design reduces the pressure drop across the valve

APPLICATIONS

- Gas or liquid flow control
- Ideal for quick bubble tight shut-off

SPECIFICATIONS

VALVE

Service: Compatible liquids and gases.
Body: 3-piece.
Line Sizes: 1/2 to 3˝ .
End Connections: Female NPT.
Pressure Limits: 28˝ Hg to 1000 psi (-0.7 to 69 bar) up to 250°F.
Wetted Materials: Body and ball: 316 SS (CF8M); Stem: 316 SS; Seat: RTFE/ PTFE; Seal, washer, and packing: PTFE.
Temperature Limits: -20 to 392°F (-29 to 200°C).
Other Materials: O-ring: Fluoroelastomer; Handle: 304 SS; Washer: 301 SS; Stem nut, Locking device, Gland ring: 304 SS; Handle sleeve: PVC.
Agency Approvals: Meets the technical requirements of EU Directive 2011/65/ EU (RoHS II).

ACTUATORS

Pneumatic "DA" and "SR" Series

Type: DA series is double acting and SR series is spring return (rack and pinion).
Normal Supply Pressure: DA: 40 to 115 psi (2.7 to 7.9 bar); SR: 80 psi (5.5 bar).
Maximum Supply Pressure: 120 psi (8.6 bar).
Air Connections: DA01: 1/8˝ female NPT; DA02 to DA05: 1/4˝ female NPT; SR02 to SR07: 1/4˝ female NPT.
Housing Material: Anodized aluminum body and epoxy coated aluminum end caps.
Temperature Limits: -40 to 176°F (-40 to 80°C).
Accessory Mounting: NAMUR standard.

Electric "TD" and "MD" Series

Power Requirements: 110 VAC, 220 VAC, 24 VAC or 24 VDC (MD models not available in 24 VDC).
Power Consumption: See instruction manual.
Cycle Time (per 90°): TD01: 4 s; MD01: 10 s; TD02 and MD02: 20 s; TD03 and MD03: 30 s.
Duty Rating: 85%.
Enclosure Rating: NEMA 4X (IP67).
Housing Material: Powder coated aluminum.
Temperature Limits: -22 to 140°F (-30 to 60°C).
Electrical Connection: 1/2˝ female NPT.
Modulating Input: 4-20 mA.
Standard Features: Manual override, position indicator, and TD models come with two limit switches.

Electric "TI" and "MI" Series

Power Requirements: 110 VAC, 220 VAC, 24 VAC or 24 VDC.
Power Consumption: See instruction manual.
Cycle Time (per 90°): See instruction manual.
Duty Rating: See instruction manual.
Enclosure Rating: NEMA 7, designed to meet hazardous locations: Class I, Group C and D; Class II, Group E, F and G; Division I and II.
Housing Material: Powder coated aluminum.
Temperature Limits: -40 to 140°F (-40 to 60°C).
Electrical Connection: 1/2˝ female NPT.
Modulating Input: 4-20 mA.
Standard Features: Position indicator and two limit switches.

3-PIECE NPT STAINLESS STEEL BALL VALVES

Full Port, Vented Ball, Electric or Pneumatic Actuators

MODEL CHART

Size	Cv (gal/min)	Popular Hand Operated Model	Popular Double Acting Pneumatic Model	Popular Spring Return Pneumatic Model	Popular NEMA 4X Two Position Electric (110 VAC) Model	Popular NEMA 4X Modulating Electric (110 VAC) Model
1/2″	36.64	**WE02-CHD00**	**WE02-CDA01**	**WE02-CSR02**	**WE02-CTD01-A**	**WE02-CMD01-A**
3/4″	67.69	**WE02-DHD00**	**WE02-DDA01**	**WE02-DSR02**	**WE02-DTD01-A**	**WE02-DMD01-A**
1″	110.27	**WE02-EHD00**	**WE02-EDA02**	**WE02-ESR03**	**WE02-ETD01-A**	**WE02-EMD01-A**
1-1/4″	184.73	**WE02-FHD00**	**WE02-FDA02**	**WE02-FSR03**	**WE02-FTD01-A**	**WE02-FMD01-A**
1-1/2″	266.62	**WE02-GHD00**	**WE02-GDA03**	**WE02-GSR04**	**WE02-GTD02-A**	**WE02-GMD01-A**
2″	485.3	**WE02-HHD00**	**WE02-HDA03**	**WE02-HSR05**	**WE02-HTD02-A**	**WE02-HMD02-A**
2-1/2″	791.57	**WE02-IHD00**	**WE02-IDA04**	**WE02-ISR07**	**WE02-ITD03-A**	**WE02-IMD03-A**
3″	1151.95	**WE02-JHD00**	**WE02-JDA05**	**WE02-JSR07**	**WE02-JTD03-A**	**WE02-JMD03-A**

MODEL CHART - HAND OPERATED AND PNEUMATIC ACTUATOR

Example	WE02	-CSR02	-N	N	09		WE02-CSR02-NN09
Series	WE02						316 SS 3-piece NPT
Size and Actuator		CHD00					1/2″ hand operated
		DHD00					3/4″ hand operated
		EHD00					1″ hand operated
		FHD00					1-1/4″ hand operated
		GHD00					1-1/2″ hand operated
		HHD00					2″ hand operated
		IHD00					2-1/2″ hand operated
		JHD00					3″ hand operated
		CDA01					1/2″ double acting
		DDA01					3/4″ double acting
		EDA02					1″ double acting
		FDA02					1-1/4″ double acting
		GDA03					1-1/2″ double acting
		HDA03					2″ double acting
		IDA04					2-1/2″ double acting
		JDA05					3″ double acting
		CSR02					1/2″ spring return
		DSR02					3/4″ spring return
		ESR03					1″ spring return
		FSR03					1-1/4″ spring return
		GSR04					1-1/2″ spring return
		HSR05					2″ spring return
		ISR07					2-1/2″ spring return
		JSR07					3″ spring return
Solenoid			N				No solenoid
			A				NEMA 4X NAMUR solenoid
Solenoid Voltage				N			No solenoid
				A			110 VAC
				B			220 VAC
				C			24 VAC
				D			24 VDC
				E			12 VDC
Positioner and Switches					00		None
					01		42AD0 exp limit switch
					02		45VD0 exp position transmitter
					03		42AD0-B ATEX limit switch
					04		42AD0-IE IECEX limit switch
					06		QV-210101 poly limit switch
					07		VPS and P1 prox switch
					08		265ER-D5 positioner
					09		285ER-D5 smart positioner
Options						NO	Fail open spring return actuator

ACCESSORIES

Model	Description
VB-01	Volume booster

MODEL CHART - ELECTRIC ACTUATOR

Example	WE02	-ETD01	-B	WE02-ETD01-B
Series	WE02			316 SS 3-piece NPT
Size and Actuator		CTD01		1/2″ NEMA 4X two-position
		DTD01		3/4″ NEMA 4X two-position
		ETD01		1″ NEMA 4X two-position
		FTD01		1-1/4″ NEMA 4X two-position
		GTD02		1-1/2″ NEMA 4X two-position
		HTD02		2″ NEMA 4X two-position
		ITD03		2-1/2″ NEMA 4X two-position
		JTD03		3″ NEMA 4X two-position
		CMD01		1/2″ NEMA 4X modulating
		DMD01		3/4″ NEMA 4X modulating
		EMD01		1″ NEMA 4X modulating
		FMD01		1-1/4″ NEMA 4X modulating
		GMD01		1-1/2″ NEMA 4X modulating
		HMD02		2″ NEMA 4X modulating
		IMD03		2-1/2″ NEMA 4X modulating
		JMD03		3″ NEMA 4X modulating
		CTI01		1/2″ exp two-position
		DTI01		3/4″ exp two-position
		ETI02		1″ exp two-position
		FTI02		1-1/4″ exp two-position
		GTI03		1-1/2″ exp two-position
		HTI04		2″ exp two-position
		ITI05		2-1/2″ exp two-position
		JTI05		3″ exp two-position
		CMI01		1/2″ exp electric modulating
		DMI01		3/4″ exp electric modulating
		EMI02		1″ exp electric modulating
		FMI02		1-1/4″ exp electric modulating
		GMI03		1-1/2″ exp electric modulating
		HMI04		2″ exp electric modulating
		IMI05		2-1/2″ exp electric modulating
		JMI05		3″ exp electric modulating
Actuator Voltage			A	110 VAC
			B	220 VAC
			C	24 VAC
			D	24 VDC

REPAIR KIT

Model	Valve Series and Size
VRK-10	WE02-1/2″
VRK-11	WE02-3/4″
VRK-12	WE02-1″
VRK-14	WE02-1-1/2″
VRK-15	WE02-2″
VRK-16	WE02-2-1/2″
VRK-17	WE02-3″

Parts List - Included in Kit

1 PTFE thrust washer
1 FKM O-ring
2 PTFE stem packing
2 PTFE seals
2 RTFE seats

Dwyer

SERIES WE03

3-PIECE TRI-CLAMP STAINLESS STEEL BALL VALVES

Cavity Filled, Full Port, Electric or Pneumatic Actuators

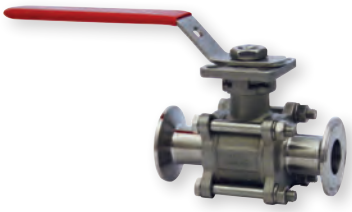

WE03-DHD00

WE03-DDA01

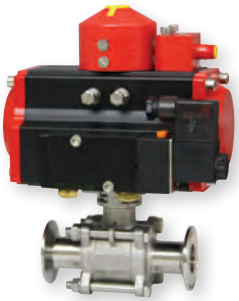

WE03-DDA01-AA07

WE03-DDA01-AA06

WE03-DTD01-A

The **Series WE03 3-Piece Tri-Clamp Stainless Steel Ball Valves** incorporate a full port 3-piece tri-clamp SS ball valve for great flow rates with minimal pressure drop. The valve features a blowout proof stem for added safety, reinforced PTFE seats and seals for longer life, and a 316 stainless steel (ASTM CF8M) ball for better performance. Actuators are direct mounted creating a compact assembly for tight spaces. Limit switches are able to be mounted directly to the valves allowing for remote position indication.

The Series WE03 can be configured with either an electric or pneumatic actuator. Electric actuators are available in weatherproof or explosion-proof, a variety of supply voltages and two-position or modulating control. Two-position actuators use the supply voltage to drive the valve open or closed, while the modulating actuator accepts a 4-20 mA input for valve positioning. Actuators feature thermal overload protection and permanently lubricated gear train.

The pneumatic double acting actuator uses an air supply to drive the valve open and closed. The actuator has two supply ports with one driving the valve open and the other driving the valve closed. Spring return pneumatic actuators use the air supply to open the valve and internally loaded springs return the valve to the closed position. Also available is the SN solenoid valve to electrically switch the air supply pressure between the air supply ports for opening and closing the valve. Actuators are constructed of anodized and epoxy coated aluminum for years of corrosion free service.

BENEFITS/FEATURES

- Capable of being configured to fit any application
- Limit switches can be mounted to manual valves for remote monitoring
- Cavity filled valve for sanitary applications
- Weatherproof or explosion-proof electric actuators
- Double acting or spring return anodized aluminum pneumatic actuators
- Full port design reduces the pressure drop across the valve

APPLICATIONS

- Gas or liquid flow control
- Ideal for quick bubble tight shut-off
- Designed for food and beverage applications

SPECIFICATIONS

VALVE

Service: Compatible liquids and gases.
Body: 3-piece.
Line Sizes: 1/2 to 2″ .
End Connections: Tri-clamp ends.
Pressure Limits: 28″ Hg to 1000 psi (-0.7 to 69 bar) up to 250°F.
Wetted Materials: Body and ball: 316 SS (CF8M); Stem: 316 SS; Seat: RTFE/PTFE; Seal, washer, and packing: PTFE.
Temperature Limits: -20 to 392°F (-29 to 200°C).
Other Materials: O-ring: Fluoroelastomer; Handle: 304 SS; Washer: 301 SS; Stem nut, Locking device, Gland ring: 304 SS; Handle sleeve: PVC.
Agency Approvals: Meets the technical requirements of EU Directive 2011/65/EU (RoHS II).

ACTUATORS

Pneumatic "DA" and "SR" Series

Type: DA series is double acting and SR series is spring return (rack and pinion).
Normal Supply Pressure: DA: 40 to 115 psi (2.7 to 7.9 bar); SR: 80 psi (5.5 bar).
Maximum Supply Pressure: 120 psi (8.6 bar).
Air Connections: DA01: 1/8″ female NPT; DA02: 1/4″ female NPT; SR02 to SR04: 1/4″ female NPT.
Housing Material: Anodized aluminum body and epoxy coated aluminum end caps.
Temperature Limits: -40 to 176°F (-40 to 80°C).
Accessory Mounting: NAMUR standard.

Electric "TD" and "MD" Series

Power Requirements: 110 VAC, 220 VAC, 24 VAC or 24 VDC (MD models not available in 24 VDC).
Power Consumption: See instruction manual.
Cycle Time (per 90°): TD01: 4 s; MD01: 10 s; TD02 and MD02: 20 s.
Duty Rating: 85%.
Enclosure Rating: NEMA 4X (IP67).
Housing Material: Powder coated aluminum.
Temperature Limits: -22 to 140°F (-30 to 60°C).
Electrical Connection: 1/2″ female NPT.
Modulating Input: 4-20 mA.
Standard Features: Manual override, position indicator, and TD models come with two limit switches.

Electric "TI" and "MI" Series

Power Requirements: 110 VAC, 220 VAC, 24 VAC or 24 VDC.
Power Consumption: See instruction manual.
Cycle Time (per 90°): See instruction manual.
Duty Rating: See instruction manual.
Enclosure Rating: NEMA 7, designed to meet hazardous locations: Class I, Group C and D; Class II, Group E, F and G; Division I and II.
Housing Material: Powder coated aluminum.
Temperature Limits: -40 to 140°F (-40 to 60°C).
Electrical Connection: 1/2″ female NPT.
Modulating Input: 4-20 mA.
Standard Features: Position indicator and two limit switches.

3-PIECE TRI-CLAMP STAINLESS STEEL BALL VALVES

Cavity Filled, Full Port, Electric or Pneumatic Actuators

MODEL CHART

Size	Cv (gal/min)	Popular Hand Operated Model	Popular Double Acting Pneumatic Model	Popular Spring Return Pneumatic Model	Popular NEMA 4X Two Position Electric (110 VAC) Model	Popular NEMA 4X Modulating Electric (110 VAC) Model
1/2″	14.39	**WE03-CHD00**	**WE03-CDA01**	**WE03-CSR02**	**WE03-CTD01-A**	**WE03-CMD01-A**
3/4″	42.25	**WE03-DHD00**	**WE03-DDA01**	**WE03-DSR02**	**WE03-DTD01-A**	**WE03-DMD01-A**
1″	86.17	**WE03-EHD00**	**WE03-EDA02**	**WE03-ESR03**	**WE03-ETD01-A**	**WE03-EMD01-A**
1-1/2″	223.61	**WE03-GHD00**	**WE03-GDA02**	**WE03-GSR04**	**WE03-GTD01-A**	**WE03-GMD01-A**
2″	437.98	**WE03-HHD00**	**WE03-HDA02**	**WE03-HSR04**	**WE03-HTD02-A**	**WE03-HMD02-A**

MODEL CHART - HAND OPERATED AND PNEUMATIC ACTUATOR

Example	WE03	-EDA02	-A	A	06		WE03-EDA02-AA06
Series	WE03						316 SS 3-piece tri-clamp
Size and Actuator		CHD00					1/2″ hand operated
		DHD00					3/4″ hand operated
		EHD00					1″ hand operated
		GHD00					1-1/2″ hand operated
		HHD00					2″ hand operated
		CDA01					1/2″ double acting
		DDA01					3/4″ double acting
		EDA02					1″ double acting
		GDA02					1-1/2″ double acting
		HDA02					2″ double acting
		CSR02					1/2″ spring return
		DSR02					3/4″ spring return
		ESR03					1″ spring return
		GSR04					1-1/2″ spring return
		HSR04					2″ spring return
Solenoid			N				No solenoid
			A				NEMA 4X NAMUR solenoid
Solenoid Voltage				N			No solenoid
				A			110 VAC
				B			220 VAC
				C			24 VAC
				D			24 VDC
				E			12 VDC
Positioner and Switches					00		None
					01		42AD0 exp limit switch
					02		45VD0 exp position transmitter
					03		42AD0-B ATEX limit switch
					04		42AD0-IE IECEX limit switch
					06		QV-210101 poly limit switch
					07		VPS and P1 prox switch
					08		265ER-D5 positioner
					09		285ER-D5 smart positioner
Options						NO	Fail open spring return actuator

MODEL CHART - ELECTRIC ACTUATOR

Example	WE03	-CMD01	-A	WE03-CMD01-A
Series	WE03			316 SS 3-piece tri-clamp
Size and Actuator		CTD01		1/2″ NEMA 4X two-position
		DTD01		3/4″ NEMA 4X two-position
		ETD01		1″ NEMA 4X two-position
		GTD01		1-1/2″ NEMA 4X two-position
		HTD02		2″ NEMA 4X two-position
		CMD01		1/2″ NEMA 4X modulating
		DMD01		3/4″ NEMA 4X modulating
		EMD01		1″ NEMA 4X modulating
		GMD01		1-1/2″ NEMA 4X modulating
		HMD02		2″ NEMA 4X modulating
		CTI01		1/2″ exp two-position
		DTI01		3/4″ exp two-position
		ETI02		1″ exp two-position
		GTI02		1-1/2″ exp two-position
		HTI02		2″ exp two-position
		CMI01		1/2″ exp electric modulating
		DMI01		3/4″ exp electric modulating
		EMI02		1″ exp electric modulating
		GMI02		1-1/2″ exp electric modulating
		HMI02		2″ exp electric modulating
Actuator Voltage			A	110 VAC
			B	220 VAC
			C	24 VAC
			D	24 VDC

REPAIR KIT

Model	Valve Series and Size
VRK-19	WE03-1/2″
VRK-20	WE03-3/4″
VRK-21	WE03-1″
VRK-22	WE03-1-1/2″
VRK-23	WE03-2″

Parts List - Included in Kit

1 PTFE thrust washer
1 FKM O-ring
2 PTFE stem packing
2 PTFE seats

ACCESSORIES

Model	Description
VB-01	Volume booster

Dwyer

SERIES WE04

2-PIECE FLANGED STAINLESS STEEL BALL VALVES

150# ANSI Flange, Vented Ball, Electric or Pneumatic Actuators

WE04-DHD00

WE04-DDA02-AA03

WE04-DDA02-NN09

WE04-DTD01-A

WE04-CTI01-A

The **Series WE04 2-Piece Flanged Stainless Steel Ball Valves** incorporate a full port 2-piece flanged SS ball valve for great flow rates with minimal pressure drop. The valve features a blowout proof stem for added safety, reinforced PTFE seats and seals for longer life, and a 316 stainless steel (ASTM CF8M) ball for better performance. Actuators are direct mounted creating a compact assembly for tight spaces. Limit switches are able to be mounted directly to the valves allowing for remote position indication.

The Series WE04 can be configured with either a pneumatic or electric actuator. Electric actuators are available in weatherproof or explosion-proof, a variety of supply voltages, and two-position or modulating control. Two-position actuators use the supply voltage to drive the valve open or closed, while the modulating actuator accepts a 4-20 mA input for valve positioning. Actuators feature thermal overload protection and permanently lubricated gear train.

The pneumatic double acting actuator uses an air supply to drive the valve open and closed. The actuator has two supply ports, with one driving the valve open, and the other driving the valve closed. Spring return pneumatic actuators use the air supply to open the valve, and internally loaded springs return the valve to the closed position. Also available is the SN solenoid valve to electrically switch the air supply pressure between the air supply ports for opening and closing the valve. Actuators are constructed of anodized and epoxy coated aluminum for years of corrosion free service.

BENEFITS/FEATURES

- Capable of being configured to fit any application
- Limit switches can be mounted to manual valves for remote monitoring
- Vented ball to reduce operating torque
- Weatherproof or explosion-proof electric actuators
- Double acting or spring return anodized aluminum pneumatic actuators
- Eliminates threads and reduces installation and maintenance time
- Full port design reduces the pressure drop across the value

APPLICATIONS

- Gas or liquid flow control
- Ideal for quick bubble tight shut-off

SPECIFICATIONS

VALVE

Service: Compatible liquids and gases.
Body: 2-piece.
Line Sizes: 1/2 to 3˝ .
End Connections: 150# ANSI flange.
Pressure Limits: 28˝ Hg to 275 psi (-0.7 to 19 bar) up to 392°F.
Wetted Materials: Body and ball: 316 SS (CF8M); Stem: 316 SS; Seat: RTFE/PTFE; Seal, washer, and packing: PTFE.
Temperature Limits: -20 to 392°F (-29 to 200°C).
Other Materials: O-ring: Fluoroelastomer; Handle: 304 SS; Washer: 301 SS; Stem nut, Locking device, Gland ring: 304 SS; Handle sleeve: PVC.
Agency Approvals: Meets the technical requirements of EU Directive 2011/65/EU (RoHS II).

ACTUATORS

Pneumatic "DA" and "SR" Series
Type: DA series is double acting and SR series is spring return (rack and pinion).
Normal Supply Pressure: DA: 40 to 115 psi (2.7 to 7.9 bar); SR: 80 psi (5.5 bar).
Maximum Supply Pressure: 120 psi (8.6 bar).
Air Connections: DA01: 1/8˝ female NPT; DA02 to DA04: 1/4˝ female NPT; SR02 to SR06: 1/4˝ female NPT.
Housing Material: Anodized aluminum body and epoxy coated aluminum end caps.
Temperature Limits: -40 to 176°F (-40 to 80°C).
Accessory Mounting: NAMUR standard.

Electric "TD" and "MD" Series
Power Requirements: 110 VAC, 220 VAC, 24 VAC or 240 VDC (MD models not available in 24 VDC) .
Power Consumption: See instruction manual.
Cycle Time (per 90°): TD01: 4 s; MD01: 10 s; TD02 and MD02: 20 s; TD03 and MD03: 30 s.
Duty Rating: 85%.
Enclosure Rating: NEMA 4X (IP67).
Housing Material: Powder coated aluminum.
Temperature Limits: -22 to 140°F (-30 to 60°C).
Electrical Connection: 1/2˝ female NPT.
Modulating Input: 4-20 mA.
Standard Features: Manual override, position indicator, and TD models come with two limit switches.

Electric "TI" and "MI" Series
Power Requirements: 110 VAC, 220 VAC, 24 VAC or 24 VDC.
Power Consumption: See instruction manual.
Cycle Time (per 90°): See instruction manual.
Duty Rating: See instruction manual.
Enclosure Rating: NEMA 7, designed to meet hazardous locations: Class I, Group C and D; Class II, Group E, F and G; Division I and II.
Housing Material: Powder coated aluminum.
Temperature Limits: -40 to 140°F (-40 to 60°C).
Electrical Connection: 1/2˝ NPT female.
Modulating Input: 4-20 mA.
Standard Features: Position indicator and two limit switches.

2-PIECE FLANGED STAINLESS STEEL BALL VALVES

150# ANSI Flange, Vented Ball, Electric or Pneumatic Actuators

MODEL CHART						
Size	Cv (gal/min)	Popular Hand Operated Model	Popular Double Acting Pneumatic Model	Popular Spring Return Pneumatic Model	Popular NEMA 4X Two Position Electric (110 VAC) Model	Popular NEMA 4X Modulating Electric (110 VAC) Model
1/2″	36.64	**WE04-CHD00**	**WE04-CDA01**	**WE04-CSR02**	**WE04-CTD01-A**	**WE04-CMD01-A**
3/4″	67.69	**WE04-DHD00**	**WE04-DDA01**	**WE04-DSR02**	**WE04-DTD01-A**	**WE04-DMD01-A**
1″	101.63	**WE04-EHD00**	**WE04-EDA03**	**WE04-ESR03**	**WE04-ETD01-A**	**WE04-EMD01-A**
1-1/2″	266.62	**WE04-GHD00**	**WE04-GDA03**	**WE04-GSR04**	**WE04-GTD02-A**	**WE04-GMD01-A**
2″	485.3	**WE04-HHD00**	**WE04-HDA03**	**WE04-HSR05**	**WE04-HTD02-A**	**WE04-HMD02-A**
2-1/2″	816.9	**WE04-IHD00**	**WE04-IDA04**	**WE04-ISR06**	**WE04-ITD03-A**	**WE04-IMD03-A**
3″	1121.84	**WE04-JHD00**	**WE04-JDA04**	**WE04-JSR06**	**WE04-JTD03-A**	**WE04-JMD03-A**

MODEL CHART - HAND OPERATED AND PNEUMATIC ACTUATOR							
Example	**WE04**	**-GDA03**	**-A**	**B**	**05**		**WE04-GDA03-AB05**
Series	WE04						316 SS 2-piece flanged
Size and Actuator		CHD00					1/2″ hand operated
		DHD00					3/4″ hand operated
		EHD00					1″ hand operated
		GHD00					1-1/2″ hand operated
		HHD00					2″ hand operated
		IHD00					2-1/2″ hand operated
		JHD00					3″ hand operated
		CDA01					1/2″ double acting
		DDA01					3/4″ double acting
		EDA03					1″ double acting
		GDA03					1-1/2″ double acting
		HDA03					2″ double acting
		IDA04					2-1/2″ double acting
		JDA04					3″ double acting
		CSR02					1/2″ spring return
		DSR02					3/4″ spring return
		ESR03					1″ spring return
		GSR04					1-1/2″ spring return
		HSR05					2″ spring return
		ISR06					2-1/2″ spring return
		JSR06					3″ spring return
Solenoid			N				No solenoid
			A				NEMA 4X NAMUR solenoid
Solenoid Voltage				N			No solenoid
				A			110 VAC
				B			220 VAC
				C			24 VAC
				D			24 VDC
				E			12 VDC
Positioner and Switches					00		None
					01		42AD0 exp limit switch
					02		45VD0 exp position transmitter
					03		42AD0-B ATEX limit switch
					04		42AD0-IE IECEX limit switch
					06		QV-210101 poly limit switch
					07		VPS and P1 prox switch
					08		265ER-D5 positioner
					09		285ER-D5 smart positioner
Options						NO	Fail open spring return actuator

MODEL CHART - ELECTRIC ACTUATOR				
Example	**WE04**	**-ITD03**	**-B**	**WE04-ITD03-B**
Series	WE04			316 SS 2-piece flanged
Size and Actuator		CTD01		1/2″ NEMA 4X two-position
		DTD01		3/4″ NEMA 4X two-position
		ETD01		1″ NEMA 4X two-position
		GTD02		1-1/2″ NEMA 4X two-position
		HTD02		2″ NEMA 4X two-position
		ITD03		2-1/2″ NEMA 4X two-position
		JTD03		3″ NEMA 4X two-position
		CMD01		1/2″ NEMA 4X modulating
		DMD01		3/4″ NEMA 4X modulating
		EMD01		1″ NEMA 4X modulating
		GMD01		1-1/2″ NEMA 4X modulating
		HMD02		2″ NEMA 4X modulating
		IMD03		2-1/2″ NEMA 4X modulating
		JMD03		3″ NEMA 4X modulating
		CTI01		1/2″ exp two-position
		DTI01		3/4″ exp two-position
		ETI02		1″ exp two-position
		GTI03		1-1/2″ exp two-position
		HTI04		2″ exp two-position
		ITI04		2-1/2″ exp two-position
		JTI05		3″ exp two-position
		CMI01		1/2″ exp electric modulating
		DMI01		3/4″ exp electric modulating
		EMI02		1″ exp electric modulating
		GMI03		1-1/2″ exp electric modulating
		HMI04		2″ exp electric modulating
		IMI04		2-1/2″ exp electric modulating
		JMI05		3″ exp electric modulating
Actuator Voltage			A	110 VAC
			B	220 VAC
			C	24 VAC
			D	24 VDC

ACCESSORIES	
Model	**Description**
VB-01	Volume booster

REPAIR KIT	
Model	**Valve Series and Size**
VRK-27	WE04-1/2″
VRK-28	WE04-3/4″
VRK-29	WE04-1″
VRK-31	WE04-1-1/2″
VRK-32	WE04-2″
VRK-33	WE04-2-1/2″
VRK-34	WE04-3″
Parts List - Included in Kit	
1 PTFE thrust washer	
1 FKM O-ring	
2 PTFE stem packing	
2 PTFE seals	
2 RTFE seats	

Dwyer

SERIES WE05

3-PIECE SOCKET WELD STAINLESS STEEL BALL VALVES

Full Port, Vented Ball, Electric or Pneumatic Actuators

WE05-EHD00

WE05-FDA02

WE05-DDA01-AA01

WE05-JTD03-A

WE05-ITI05-B

The **Series WE05 3-Piece Socket Weld Stainless Steel Ball Valves** offer the best possible design for socket weld ball valves. The swing out body feature and seat arrangement allow for trouble-free welding installation. The Series WE05 incorporates a full port 3-piece SS ball valve for ideal flow rates with minimal pressure drop. The valve features a blowout proof stem for added safety, reinforced PTFE seats and seals for longer life, and a 316 stainless steel (ASTM CF8M) ball for better performance.

Actuators are directly mounted creating a compact assembly for tight spaces. Limit switches can be mounted directly to the valves, allowing for remote position indication. The Series WE05 can be configured with either an electric or pneumatic actuator. Electric actuators are available in weatherproof or explosion-proof, a variety of supply voltages and two-position modulating control. Two-position actuators use the supply voltage to drive the valve open or close, while the modulating actuator accepts a 4-20 mA input for valve positioning. Actuators feature thermal overload protection and a permanently lubricated gear train.

The pneumatic double acting actuator uses an air supply to drive the valve open and closed. The actuator has two supply ports with one driving the valve open and the other driving the valve closed. Spring return pneumatic actuators use the air supply to open the valve and internally loaded springs return the valve to the closed position. Also available is the SV3 solenoid valve to electrically switch the air supply pressure between the air supply ports for opening and closing the valve. Actuators are constructed of anodized and epoxy coated aluminum for years of corrosion free service.

BENEFITS/FEATURES

- Socket weld ends
- Capable of being configured to fit any application
- Limit switches can be mounted to manual valves for remote monitoring
- Available with a variety of electric and pneumatic actuators

APPLICATIONS

- Gas or liquid flow control

SPECIFICATIONS

VALVE

Service: Compatible liquids and gases.
Body: 3-piece.
Line Sizes: 1/2 to 3˝.
End Connections: Socket weld.
Pressure Limits: 20˝ Hg to 1000 psi (-0.7 to 69 bar) up to 250°F.
Wetted Materials: Body and ball: 316 SS (CF8M); Stem: 316 SS; Seat: RTFE/PTFE; Seal, washer, and packing: PTFE.
Temperature Limits: -20 to 392°F (-29 to 200°C).
Other Materials: O-ring: Fluoroelastomer; Handle: 304 SS; Washer: 301 SS; Stem nut, Locking device, Gland ring: 304 SS; Handle sleeve: PVC.
Agency Approvals: Meets the technical requirements of EU Directive 2011/65/EU (RoHS II).

ACTUATORS

Pneumatic "DA" and "SR" Series
Type: DA series is double acting and SR series is spring return (rack and pinion).
Normal Supply Pressure: DA: 40 to 115 psi (2.7 to 7.9 bar); SR: 80 psi (5.5 bar).
Maximum Supply Pressure: 120 psi (8.6 bar).
Air Connections: DA01: 1/8˝ female NPT; DA02 to DA05: 1/4˝ female NPT; SR02 to SR07: 1/4˝ female NPT.
Housing Material: Anodized aluminum body and epoxy coated aluminum end caps.
Temperature Limits: -40 to 176°F (-40 to 80°C).
Accessory Mounting: NAMUR standard.

Electric "TD" and "MD" Series
Power Requirements: 110 VAC, 220 VAC, 24 VAC or 24 VDC (MD models not available in 24 VDC).
Power Consumption: See instruction manual.
Cycle Time (per 90°): TD01: 4 s; MD01: 10 s; TD02 and MD02: 20 s; TD03 and MD03: 30 s.
Duty Rating: 85%.
Enclosure Rating: NEMA 4X (IP67).
Housing Material: Powder coated aluminum.
Temperature Limits: -22 to 140°F (-30 to 60°C).
Electrical Connection: 1/2˝ female NPT.
Modulating Input: 4-20 mA.
Standard Features: Manual override, position indicator, and TD models come with two limit switches.

Electric "TI" and "MI" Series
Power Requirements: 110 VAC, 220 VAC, 24 VAC or 24 VDC.
Power Consumption: See instruction manual.
Cycle Time (per 90°): See instruction manual.
Duty Rating: See instruction manual.
Enclosure Rating: NEMA 7, designed to meet hazardous locations: Class I, Group C and D; Class II, Group E, F and G; Division I and II.
Housing Material: Powder coated aluminum.
Temperature Limits: -40 to 140°F (-40 to 60°C).
Electrical Connection: 1/2˝ female NPT.
Modulating Input: 4-20 mA.
Standard Features: Position indicator and two limit switches.

3-PIECE SOCKET WELD STAINLESS STEEL BALL VALVES

Full Port, Vented Ball, Electric or Pneumatic Actuators

MODEL CHART

Size	Cv (gal/min)	Popular Hand Operated Model	Popular Double Acting Pneumatic Model	Popular Spring Return Pneumatic Model	Popular NEMA 4X Two Position Electric (110 VAC) Model	Popular NEMA 4X Modulating Electric (110 VAC) Model
1/2″	36.64	**WE05-CHD00**	**WE05-CDA01**	**WE05-CSR02**	**WE05-CTD01-A**	**WE05-CMD01-A**
3/4″	67.69	**WE05-DHD00**	**WE05-DDA01**	**WE05-DSR02**	**WE05-DTD01-A**	**WE05-DMD01-A**
1″	110.27	**WE05-EHD00**	**WE05-EDA02**	**WE05-ESR03**	**WE05-ETD01-A**	**WE05-EMD01-A**
1-1/4″	184.73	**WE05-FHD00**	**WE05-FDA02**	**WE05-FSR03**	**WE05-FTD01-A**	**WE05-FMD01-A**
1-1/2″	266.62	**WE05-GHD00**	**WE05-GDA03**	**WE05-GSR04**	**WE05-GTD02-A**	**WE05-GMD01-A**
2″	485.3	**WE05-HHD00**	**WE05-HDA03**	**WE05-HSR05**	**WE05-HTD02-A**	**WE05-HMD02-A**
2-1/2″	791.57	**WE05-IHD00**	**WE05-IDA04**	**WE05-ISR07**	**WE05-ITD03-A**	**WE05-IMD03-A**
3″	1151.95	**WE05-JHD00**	**WE05-JDA05**	**WE05-JSR07**	**WE05-JTD03-A**	**WE05-JMD03-A**

MODEL CHART - HAND OPERATED AND PNEUMATIC ACTUATOR

Example	**WE05**	**-CSR02**	**-N**	**N**	**09**		**WE05-CSR02-NN09**
Series	WE05						316 SS 3-piece socket weld
Size and Actuator		CHD00					1/2″ hand operated
		DHD00					3/4″ hand operated
		EHD00					1″ hand operated
		FHD00					1-1/4″ hand operated
		GHD00					1-1/2″ hand operated
		HHD00					2″ hand operated
		IHD00					2-1/2″ hand operated
		JHD00					3″ hand operated
		CDA01					1/2″ double acting
		DDA01					3/4″ double acting
		EDA02					1″ double acting
		FDA02					1-1/4″ double acting
		GDA03					1-1/2″ double acting
		HDA03					2″ double acting
		IDA04					2-1/2″ double acting
		JDA05					3″ double acting
		CSR02					1/2″ spring return
		DSR02					3/4″ spring return
		ESR03					1″ spring return
		FSR03					1-1/4″ spring return
		GSR04					1-1/2″ spring return
		HSR05					2″ spring return
		ISR07					2-1/2″ spring return
		JSR07					3″ spring return
Solenoid			N				No solenoid
			A				NEMA 4X NAMUR solenoid
Solenoid Voltage				N			No solenoid
				A			120 VAC
				B			220 VAC
				C			24 VAC
				D			24 VDC
				E			12 VDC
Positioner and Switches					00		None
					01		42AD0 exp limit switch
					02		45VD0 exp position transmitter
					03		42AD0-B ATEX limit switch
					04		42AD0-IE IECEX limit switch
					06		QV-210101 poly limit switch
					07		VPS and P1 prox switch
					08		265ER-D5 positioner
					09		285ER-D5 smart positioner
Options						NO	Fail open spring return actuator

ACCESSORIES

Model	Description
VB-01	Volume booster

MODEL CHART - ELECTRIC ACTUATOR

Example	**WE05**	**-ETD01**	**-B**	**WE05-ETD01-B**
Series	WE05			316 SS 3-piece socket weld
Size and Actuator		CTD01		1/2″ NEMA 4X two-position
		DTD01		3/4″ NEMA 4X two-position
		ETD01		1″ NEMA 4X two-position
		FTD01		1-1/4″ NEMA 4X two-position
		GTD02		1-1/2″ NEMA 4X two-position
		HTD02		2″ NEMA 4X two-position
		ITD03		2-1/2″ NEMA 4X two-position
		JTD03		3″ NEMA 4X two-position
		CMD01		1/2″ NEMA 4X modulating
		DMD01		3/4″ NEMA 4X modulating
		EMD01		1″ NEMA 4X modulating
		FMD01		1-1/4″ NEMA 4X modulating
		GMD01		1-1/2″ NEMA 4X modulating
		HMD02		2″ NEMA 4X modulating
		IMD03		2-1/2″ NEMA 4X modulating
		JMD03		3″ NEMA 4X modulating
		CTI01		1/2″ exp two-position
		DTI01		3/4″ exp two-position
		ETI02		1″ exp two-position
		FTI02		1-1/4″ exp two-position
		GTI03		1-1/2″ exp two-position
		HTI04		2″ exp two-position
		ITI05		2-1/2″ exp two-position
		JTI05		3″ exp two-position
		CMI01		1/2″ exp electric modulating
		DMI01		3/4″ exp electric modulating
		EMI02		1″ exp electric modulating
		FMI02		1-1/4″ exp electric modulating
		GMI03		1-1/2″ exp electric modulating
		HMI04		2″ exp electric modulating
		IMI05		2-1/2″ exp electric modulating
		JMI05		3″ exp electric modulating
Actuator Voltage			A	110 VAC
			B	220 VAC
			C	24 VAC
			D	24 VDC

REPAIR KIT

Model	Valve Series and Size
VRK-10	WE05-1/2″
VRK-11	WE05-3/4″
VRK-12	WE05-1″
VRK-14	WE05-1-1/2″
VRK-15	WE05-2″
VRK-16	WE05-2-1/2″
VRK-17	WE05-3″

Parts List - Included in Kit

1 PTFE thrust washer
1 FKM O-ring
2 PTFE stem packing
2 PTFE seals
2 RTFE seats

Dwyer

SERIES WE06

3-PIECE NPT STAINLESS STEEL V-BALL VALVES

V-Port, Vented Ball, Electric or Pneumatic Actuators

WE06-DHD00-T

WE06-DDA01-T

WE06-DDA01-T-AA01

WE06-DTD01-T-A

WE06-CTI01-T-A

The **Series WE06 3-Piece NPT Stainless Steel V-Ball Valves** incorporate a V-port ball valve for impressive flow rates with minimal pressure drop. Quarter turn control ball valves are compact, lighter weight and much less expensive than comparable sized globe valves and segmented control valves. They also offer bubble tight shut off with zero leakage and can withstand high pressure drops. The 60° and 90° balls offer an equal percentage flow characteristic. W.E. Anderson's V-port ball valves have been designed to offer maximum flow characteristics that are substantially higher than comparably sized globe valves. The natural flow pattern of ball valves increases flow rates and in many applications valves smaller than pipeline size can be used.

Limit switches can be mounted directly to the valves allowing for remote position indication.

The Series WE06 can be configured with an electric or pneumatic actuator. Electric actuators are available in weatherproof or explosion-proof, a variety of supply voltages and two-position or modulating control.

Two-position actuators use the supply voltage to drive the valve open or close, while the modulating actuator accepts a 4-20 mA input for valve positioning. Actuators feature thermal overload protection and a permanently lubricated gear train.

The pneumatic double acting actuator uses an air supply to drive the valve open and closed. The actuator has two supply ports with one driving the valve open and the other driving the valve closed. Spring return pneumatic actuators use the air supply to open the valve and internally loaded springs return the valve to the closed position. Also available is the SV3 solenoid valve to electrically switch the air supply pressure between the air supply ports for opening and closing the valve.

BENEFITS/FEATURES

- The 60° and 90° balls offer an equal percentage flow characteristic
- Limit switches can be mounted to manual valves for remote monitoring
- Available with a variety of electric and pneumatic actuators

APPLICATIONS

- Gas or liquid flow control
- Ideal for bubble tight shut off at high pressure drops

SPECIFICATIONS

VALVE

Service: Compatible liquids and gases.
Body: 3-piece.
Line Sizes: 1/2 to 3˝.
End Connections: Female NPT.
Pressure Limits: 20˝ Hg to 1000 psi (-0.7 to 69 bar) up to 250°F.
Wetted Materials: Body and ball: 316 SS (CF8M); Stem: 316 SS; Seat: RTFE/PTFE; Seal, washer, and packing: PTFE.
Temperature Limits: -20 to 392°F (-29 to 200°C).
Other Materials: O-ring: Fluoroelastomer; Handle: 304 SS; Washer: 301 SS; Stem nut, Locking device, Gland ring: 304 SS; Handle sleeve: PVC.
Agency Approvals: Meets the technical requirements of EU Directive 2011/65/EU (RoHS II).

ACTUATORS

Pneumatic "DA" and "SR" Series

Type: DA series is double acting and SR series is spring return (rack and pinion).
Normal Supply Pressure: DA: 40 to 115 psi (2.7 to 7.9 bar); SR: 80 psi (5.5 bar).
Maximum Supply Pressure: 120 psi (8.6 bar).
Air Connections: DA01: 1/8˝ female NPT; DA02 to DA05: 1/4˝ female NPT; SR02 to SR07: 1/4˝ female NPT.
Housing Material: Anodized aluminum body and epoxy coated aluminum end caps.
Temperature Limits: -40 to 176°F (-40 to 80°C).
Accessory Mounting: NAMUR standard.

Electric "TD" and "MD" Series

Power Requirements: 110 VAC, 220 VAC, 24 VAC or 24 VDC (MD models not available in 24 VDC).
Power Consumption: See instruction manual.
Cycle Time (per 90°): TD01: 4 s; MD01: 10 s; TD02 and MD02: 20 s; TD03 and MD03: 30 s.
Duty Rating: 85%.
Enclosure Rating: NEMA 4X (IP67).
Housing Material: Powder coated aluminum.
Temperature Limits: -22 to 140°F (-30 to 60°C).
Electrical Connection: 1/2˝ female NPT.
Modulating Input: 4-20 mA.
Standard Features: Manual override, position indicator, and TD models come with two limit switches.

Electric "TI" and "MI" Series

Power Requirements: 110 VAC, 220 VAC, 24 VAC or 24 VDC.
Power Consumption: See instruction manual.
Cycle Time (per 90°): See instruction manual.
Duty Rating: See instruction manual.
Enclosure Rating: NEMA 7, designed to meet hazardous locations: Class I, Group C and D; Class II, Group E, F and G; Division I and II.
Housing Material: Powder coated aluminum.
Temperature Limits: -40 to 140°F (-40 to 60°C).
Electrical Connection: 1/2˝ female NPT.
Modulating Input: 4-20 mA.
Standard Features: Position indicator and two limit switches.

3-PIECE NPT STAINLESS STEEL V-BALL VALVES

V-Port, Vented Ball, Electric or Pneumatic Actuators

MODEL CHART							
	Cv (gal/min)		Popular Hand	Popular Double Acting	Popular Spring Return	Popular NEMA 4X Two Position	Popular NEMA 4X Modulating
Size	60°	90°	Operated Model	Pneumatic Model	Pneumatic Model	Electric (110 VAC) Model	Electric (110 VAC) Model
1/2″	7.9	9.1	**WE06-CHD00-T**	**WE06-CDA01-T**	**WE06-CSR02-T**	**WE06-CTD01-T-A**	**WE06-CMD01-T-A**
3/4″	13.6	14.2	**WE06-DHD00-T**	**WE06-DDA01-T**	**WE06-DSR02-T**	**WE06-DTD01-T-A**	**WE06-DMD01-T-A**
1″	22.3	29.1	**WE06-EHD00-T**	**WE06-EDA02-T**	**WE06-ESR03-T**	**WE06-ETD01-T-A**	**WE06-EMD01-T-A**
1-1/4″	31.5	53.7	**WE06-FHD00-T**	**WE06-FDA02-T**	**WE06-FSR03-T**	**WE06-FTD01-T-A**	**WE06-FMD01-T-A**
1-1/2″	46.2	75.5	**WE06-GHD00-T**	**WE06-GDA03-T**	**WE06-GSR04-T**	**WE06-GTD02-T-A**	**WE06-GMD01-T-A**
2″	104.7	138.4	**WE06-HHD00-T**	**WE06-HDA03-T**	**WE06-HSR05-T**	**WE06-HTD02-T-A**	**WE06-HMD02-T-A**
2-1/2″	147.5	220.3	**WE06-IHD00-T**	**WE06-IDA04-T**	**WE06-ISR07-T**	**WE06-ITD03-T-A**	**WE06-IMD03-T-A**
3″	209.1	308.3	**WE06-JHD00-T**	**WE06-JDA05-T**	**WE06-JSR07-T**	**WE06-JTD03-T-A**	**WE06-JMD03-T-A**

MODEL CHART - HAND OPERATED AND PNEUMATIC ACTUATOR								
Example	**WE06**	**-CSR02**	**-T**	**-N**	**N**	**09**		**WE06-CSR02-T-NN09**
Series	WE06							316 SS 3-piece NPT
Size and Actuator		CHD00						1/2″ hand operated
		DHD00						3/4″ hand operated
		EHD00						1″ hand operated
		FHD00						1-1/4″ hand operated
		GHD00						1-1/2″ hand operated
		HHD00						2″ hand operated
		IHD00						2-1/2″ hand operated
		JHD00						3″ hand operated
		CDA01						1/2″ double acting
		DDA01						3/4″ double acting
		EDA02						1″ double acting
		FDA02						1-1/4″ double acting
		GDA03						1-1/2″ double acting
		HDA03						2″ double acting
		IDA04						2-1/2″ double acting
		JDA05						3″ double acting
		CSR02						1/2″ spring return
		DSR02						3/4″ spring return
		ESR03						1″ spring return
		FSR03						1-1/4″ spring return
		GSR04						1-1/2″ spring return
		HSR05						2″ spring return
		ISR07						2-1/2″ spring return
		JSR07						3″ spring return
V-Ball Angle			T					60° v-ball
			N					90° v-ball
Solenoid				N				No solenoid
				A				NEMA 4X NAMUR solenoid
Solenoid Voltage					N			No solenoid
					A			120 VAC
					B			220 VAC
					C			24 VAC
					D			24 VDC
					E			12 VDC
Positioner and Switches						00		None
						01		42AD0 exp limit switch
						02		45VD0 exp position transmitter
						03		42AD0-B ATEX limit switch
						04		42AD0-IE IECEX limit switch
						06		QV-210101 poly limit switch
						07		VPS and P1 prox switch
						08		265ER-D5 positioner
						09		285ER-D5 smart positioner
Options							NO	Fail open spring return actuator

MODEL CHART - ELECTRIC ACTUATOR					
Example	**WE06**	**-ETD01**	**-T**	**-B**	**WE06-ETD01-T-B**
Series	WE06				316 SS 3-piece NPT
Size and Actuator		CTD01			1/2″ NEMA 4X two-position
		DTD01			3/4″ NEMA 4X two-position
		ETD01			1″ NEMA 4X two-position
		FTD01			1-1/4″ NEMA 4X two-position
		GTD02			1-1/2″ NEMA 4X two-position
		HTD02			2″ NEMA 4X two-position
		ITD03			2-1/2″ NEMA 4X two-position
		JTD03			3″ NEMA 4X two-position
		CMD01			1/2″ NEMA 4X modulating
		DMD01			3/4″ NEMA 4X modulating
		EMD01			1″ NEMA 4X modulating
		FMD01			1-1/4″ NEMA 4X modulating
		GMD01			1-1/2″ NEMA 4X modulating
		HMD02			2″ NEMA 4X modulating
		IMD03			2-1/2″ NEMA 4X modulating
		JMD03			3″ NEMA 4X modulating
		CTI01			1/2″ exp two-position
		DTI01			3/4″ exp two-position
		ETI02			1″ exp two-position
		FTI02			1-1/4″ exp two-position
		GTI03			1-1/2″ exp two-position
		HTI04			2″ exp two-position
		ITI05			2-1/2″ exp two-position
		JTI05			3″ exp two-position
		CMI01			1/2″ exp electric modulating
		DMI01			3/4″ exp electric modulating
		EMI02			1″ exp electric modulating
		FMI02			1-1/4″ exp electric modulating
		GMI03			1-1/2″ exp electric modulating
		HMI04			2″ exp electric modulating
		IMI05			2-1/2″ exp electric modulating
		JMI05			3″ exp electric modulating
V-Ball Angle			T		60° v-ball
			N		90° v-ball
Actuator Voltage				A	110 VAC
				B	220 VAC
				C	24 VAC
				D	24 VDC

ACCESSORIES	
Model	**Description**
VB-01	Volume booster

REPAIR KIT	
Model	**Valve Series and Size**
VRK-10	WE06-1/2″
VRK-11	WE06-3/4″
VRK-12	WE06-1″
VRK-14	WE06-1-1/2″
VRK-15	WE06-2″
VRK-16	WE06-2-1/2″
VRK-17	WE06-3″
Parts List - Included in Kit	
1 PTFE thrust washer	
1 FKM O-ring	
2 PTFE stem packing	
2 PTFE seals	
2 RTFE seats	

Dwyer

SERIES WE07

2-PIECE FLANGED STAINLESS STEEL V-BALL VALVES

150# ANSI Flange, V-Ball, Electric or Pneumatic Actuators

WE07-DHD00-T

WE07-DDA01-T-AA03

WE07-DDA01-T-NN09

WE07-DTD01-T-A

WE07-CTI01-T-A

The **Series WE07 2-Piece Flanged Stainless Steel V-Ball Valves** incorporate a V-port ball valve for impressive flow rates with minimal pressure drop. Quarter turn control ball valves are compact, lighter weight and much less expensive than comparable sized globe valves and segmented control valves. They also offer bubble tight shut off with zero leakage and can withstand high pressure drops. The 60° and 90° balls offer an equal percentage flow characteristic. W. E. Anderson's V-port ball valves have been designed to offer maximum flow characteristics that are substantially higher than comparably sized globe valves. The natural flow pattern of ball valves increases flow rates and in many applications valves smaller than pipeline size can be used.

The Series WE07 can be configured with an electric or pneumatic actuator. Electric actuators are available in weatherproof or explosion-proof, a variety of supply voltages and two-position or modulating control.

Two-position actuators use the supply voltage to drive the valve open or close, while the modulating actuator accepts a 4-20 mA input for valve positioning. Actuators feature thermal overload protection and a permanently lubricated gear train.

The pneumatic double acting actuator uses an air supply to drive the valve open and closed. The actuator has two supply ports with one driving the valve open and the other driving the valve closed. Spring return pneumatic actuators use the air supply to open the valve and internally loaded springs return the valve to the closed position. Also available is the SV3 solenoid valve to electrically switch the air supply pressure between the air supply ports for opening and closing the valve.

BENEFITS/FEATURES

- The 60° and 90° balls offer an equal percentage flow characteristic
- Bubble tight shut off at high pressure drops
- Limit switches can be mounted to manual valves for remote monitoring
- Available with a variety of electric and pneumatic actuators

APPLICATIONS

- Gas or liquid flow control

SPECIFICATIONS

VALVE

Service: Compatible liquids and gases.
Body: 2-piece.
Line Sizes: 1/2 to 3˝.
End Connections: 150# ANSI flange.
Pressure Limits: 20˝ Hg to 275 psi (-0.7 to 19 bar) up to 392°F.
Wetted Materials: Body and ball: 316 SS (CF8M); Stem: 316 SS; Seat: RTFE/PTFE; Seal, washer, and packing: PTFE.
Temperature Limits: -20 to 392°F (-29 to 200°C).
Other Materials: O-ring: Fluoroelastomer; Handle: 304 SS; Washer: 301 SS; Stem nut, Locking device, Gland ring: 304 SS; Handle sleeve: PVC.
Agency Approvals: Meets the technical requirements of EU Directive 2011/65/EU (RoHS II).

ACTUATORS

Pneumatic "DA" and "SR" Series
Type: DA series is double acting and SR series is spring return (rack and pinion).
Normal Supply Pressure: DA: 40 to 115 psi (2.7 to 7.9 bar); SR: 80 psi (5.5 bar).
Maximum Supply Pressure: 120 psi (8.6 bar).
Air Connections: DA01: 1/8˝ female NPT; DA02 to DA04: 1/4˝ female NPT; SR02 to SR06: 1/4˝ female NPT.
Housing Material: Anodized aluminum body and epoxy coated aluminum end caps.
Temperature Limits: -40 to 176°F (-40 to 80°C).
Accessory Mounting: NAMUR standard.

Electric "TD" and "MD" Series
Power Requirements: 110 VAC, 220 VAC, 24 VAC or 24 VDC (MD models not available in 24 VDC).
Power Consumption: See instruction manual.
Cycle Time (per 90°): TD01: 4 s; MD01: 10 s; TD02 and MD02: 20 s; TD03 and MD03: 30 s.
Duty Rating: 85%.
Enclosure Rating: NEMA 4X (IP67).
Housing Material: Powder coated aluminum.
Temperature Limits: -22 to 140°F (-30 to 60°C).
Electrical Connection: 1/2˝ female NPT.
Modulating Input: 4-20 mA.
Standard Features: Manual override, position indicator, and TD models come with two limit switches.

Electric "TI" and "MI" Series
Power Requirements: 110 VAC, 220 VAC, 24 VAC or 24 VDC.
Power Consumption: See instruction manual.
Cycle Time (per 90°): See instruction manual.
Duty Rating: See instruction manual.
Enclosure Rating: NEMA 7, designed to meet hazardous locations: Class I, Group C and D; Class II, Group E, F and G; Division I and II.
Housing Material: Powder coated aluminum.
Temperature Limits: -40 to 140°F (-40 to 60°C).
Electrical Connection: 1/2˝ female NPT.
Modulating Input: 4-20 mA.
Standard Features: Position indicator and two limit switches.

2-PIECE FLANGED STAINLESS STEEL V-BALL VALVES

150# ANSI Flange, V-Ball, Electric or Pneumatic Actuators

MODEL CHART							
	Cv (gal/min)		Popular Hand	Popular Double Acting	Popular Spring Return	Popular NEMA 4X Two Position	Popular NEMA 4X Modulating
Size	60°	90°	Operated Model	Pneumatic Model	Pneumatic Model	Electric (110 VAC) Model	Electric (110 VAC) Model
1/2″	7.9	9.1	**WE07-CHD00-T**	**WE07-CDA01-T**	**WE07-CSR02-T**	**WE07-CTD01-T-A**	**WE07-CMD01-T-A**
3/4″	13.6	14.2	**WE07-DHD00-T**	**WE07-DDA01-T**	**WE07-DSR02-T**	**WE07-DTD01-T-A**	**WE07-DMD01-T-A**
1″	22.3	29.1	**WE07-EHD00-T**	**WE07-EDA03-T**	**WE07-ESR03-T**	**WE07-ETD01-T-A**	**WE07-EMD01-T-A**
1-1/2″	46.2	75.5	**WE07-GHD00-T**	**WE07-GDA03-T**	**WE07-GSR04-T**	**WE07-GTD02-T-A**	**WE07-GMD01-T-A**
2″	104.7	138.4	**WE07-HHD00-T**	**WE07-HDA03-T**	**WE07-HSR05-T**	**WE07-HTD02-T-A**	**WE07-HMD02-T-A**
2-1/2″	147.5	220.3	**WE07-IHD00-T**	**WE07-IDA04-T**	**WE07-ISR06-T**	**WE07-ITD03-T-A**	**WE07-IMD03-T-A**
3″	209.1	308.3	**WE07-JHD00-T**	**WE07-JDA04-T**	**WE07-JSR06-T**	**WE07-JTD03-T-A**	**WE07-JMD03-T-A**

MODEL CHART - HAND OPERATED AND PNEUMATIC ACTUATOR								
Example	**WE07**	**-CSR02**	**-T**	**-N**	**N**	**09**		**WE07-CSR02-T-NN09**
Series	WE07							316 SS 2-piece 150# ANSI flange
Size and Actuator		CHD00						1/2″ hand operated
		DHD00						3/4″ hand operated
		EHD00						1″ hand operated
		GHD00						1-1/2″ hand operated
		HHD00						2″ hand operated
		IHD00						2-1/2″ hand operated
		JHD00						3″ hand operated
		CDA01						1/2″ double acting
		DDA01						3/4″ double acting
		EDA03						1″ double acting
		GDA03						1-1/2″ double acting
		HDA03						2″ double acting
		IDA04						2-1/2″ double acting
		JDA04						3″ double acting
		CSR02						1/2″ spring return
		DSR02						3/4″ spring return
		ESR03						1″ spring return
		GSR04						1-1/2″ spring return
		HSR05						2″ spring return
		ISR06						2-1/2″ spring return
		JSR06						3″ spring return
V-Ball Angle			T					60° v-ball
			N					90° v-ball
Solenoid				N				No solenoid
				A				NEMA 4X NAMUR solenoid
Solenoid Voltage					N			No solenoid
					A			120 VAC
					B			220 VAC
					C			24 VAC
					D			24 VDC
					E			12 VDC
Positioner and Switches						00		None
						01		42AD0 exp limit switch
						02		45VD0 exp position transmitter
						03		42AD0-B ATEX limit switch
						04		42AD0-IE IECEX limit switch
						06		QV-210101 poly limit switch
						07		VPS and P1 prox switch
						08		265ER-D5 positioner
						09		285ER-D5 smart positioner
Options							NO	Fail open spring return actuator

MODEL CHART - ELECTRIC ACTUATOR					
Example	**WE07**	**-ETD01**	**-T**	**-B**	**WE07-ETD01-T-B**
Series	WE07				316 SS 2-piece 150# ANSI flange
Size and Actuator		CTD01			1/2″ NEMA 4X two-position
		DTD01			3/4″ NEMA 4X two-position
		ETD01			1″ NEMA 4X two-position
		GTD02			1-1/2″ NEMA 4X two-position
		HTD02			2″ NEMA 4X two-position
		ITD03			2-1/2″ NEMA 4X two-position
		JTD03			3″ NEMA 4X two-position
		CMD01			1/2″ NEMA 4X modulating
		DMD01			3/4″ NEMA 4X modulating
		EMD01			1″ NEMA 4X modulating
		GMD01			1-1/2″ NEMA 4X modulating
		HMD02			2″ NEMA 4X modulating
		IMD03			2-1/2″ NEMA 4X modulating
		JMD03			3″ NEMA 4X modulating
		CTI01			1/2″ exp two-position
		DTI01			3/4″ exp two-position
		ETI02			1″ exp two-position
		GTI03			1-1/2″ exp two-position
		HTI04			2″ exp two-position
		ITI04			2-1/2″ exp two-position
		JTI05			3″ exp two-position
		CMI01			1/2″ exp electric modulating
		DMI01			3/4″ exp electric modulating
		EMI02			1″ exp electric modulating
		GMI03			1-1/2″ exp electric modulating
		HMI04			2″ exp electric modulating
		IMI04			2-1/2″ exp electric modulating
		JMI05			3″ exp electric modulating
V-Ball Angle			T		60° v-ball
			N		90° v-ball
Actuator Voltage				A	110 VAC
				B	220 VAC
				C	24 VAC
				D	24 VDC

ACCESSORIES	
Model	**Description**
VB-01	Volume booster

REPAIR KIT	
Model	**Valve Series and Size**
VRK-27	WE07-1/2″
VRK-28	WE07-3/4″
VRK-29	WE07-1″
VRK-31	WE07-1-1/2″
VRK-32	WE07-2″
VRK-33	WE07-2-1/2″
VRK-34	WE07-3″
Parts List - Included in Kit	
1 PTFE thrust washer	
1 FKM O-ring	
2 PTFE stem packing	
2 PTFE seals	
2 RTFE seats	

Dwyer

SERIES PBV

PLASTIC AUTOMATED BALL VALVES

Electric and Pneumatic Actuators

PVC body

CPVC body

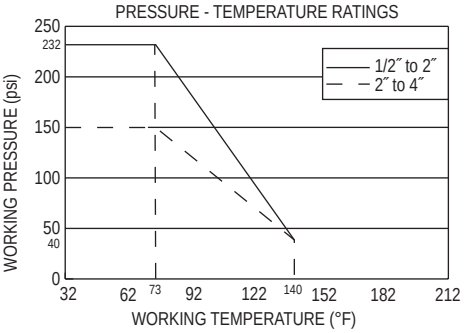

The **Series PBV Plastic Automated Ball Valves** are ideal for services in industrial, chemical, turf and irrigation, and pool and spa applications, as well as for use with potable water. The valve features a shear-proof stem designed to prevent leakage in the event of damage, reinforced TFE seats and EPDM seals for longer life, and an all-plastic construction (PVC or CPVC) for heavyweight durability at a lightweight cost. Valves also come standard with selectable NPT or socket process connections.

The PBV is an economical automated valve package with either an electric or pneumatic actuator. Electrically actuated models are weatherproof, NEMA 4 (IP56), powered by standard 115 VAC supply, and are available in either two-position or proportional control. Two-position actuators use the 115 VAC input to drive each of the valve ports open or closed, while the modulating actuator accepts a 4-20 mA input for infinite valve positioning. Actuator features include thermal overload protection to withstand stall conditions, visual position indication and a permanently lubricated gear train.

The pneumatic double acting actuator uses an air supply to drive each of the actuator ports. Spring return pneumatic actuators use the air supply to drive the valve stem one direction, and internally loaded springs return the valve to its original position. Also available is the SV3 solenoid valve to electrically switch the supply pressure between the air supply ports. Actuators are constructed of anodized aluminum and are epoxy coated for years of corrosion free service.

BENEFITS/FEATURES

- Shear proof stem
- All plastic construction

APPLICATIONS

- Gas or liquid flow control

OPTIONS

To order add suffix:	Description	Actuator Size*
-EX	Explosion proof electric actuators	XX1-XX6

***Example:** Third digit in U12 or V12 is the size.

Note: For optional electric acutator supply voltages, contact factory for model number change.

MODEL CHART - PVC

Size	CV	Double Acting Pneumatic Model	Spring Return Pneumatic Model	Two Position Electric Model	Modulating Electric Model
1/2″	25	PBVPDA102	PBVPSR202	PBVPU1102	PBVPV1202
3/4″	51	PBVPDA103	PBVPSR203	PBVPU1103	PBVPV1203
1″	97	PBVPDA104	PBVPSR204	PBVPU1104	PBVPV1204
1-1/4″	204	PBVPDA105	PBVPSR205	PBVPU1105	PBVPV1205
1-1/2″	285	PBVPDA206	PBVPSR306	PBVPU1106	PBVPV1206
2″	540	PBVPDA207	PBVPSR307	PBVPU1207	PBVPV1207
2-1/2″	712	PBVPDA308	PBVPSR608	PBVPU1308	PBVPV1308
3″	1294	PBVPDA309	PBVPSR609	PBVPU1509	PBVPV1509
4″	2629	PBVPDA410	PBVPSR710	PBVPU1510	PBVPV1510

Note: All spring return actuators are factory standard as spring (fail) close. For spring (fail) open valves, add suffix "-FO" to the model number.

MODEL CHART - CPVC

Size	CV	Double Acting Pneumatic Model	Spring Return Pneumatic Model	Two Position Electric Model	Modulating Electric Model
1/2″	25	PBVCDA102	PBVCSR202	PBVCU1102	PBVCV1202
3/4″	51	PBVCDA103	PBVCSR203	PBVCU1103	PBVCV1203
1″	97	PBVCDA104	PBVCSR204	PBVCU1104	PBVCV1204
1-1/4″	204	PBVCDA105	PBVCSR205	PBVCU1105	PBVCV1205
1-1/2″	285	PBVCDA206	PBVCSR306	PBVCU1106	PBVCV1206
2″	540	PBVCDA207	PBVCSR307	PBVCU1207	PBVCV1207
2-1/2″	712	PBVCDA308	PBVCSR608	PBVCU1308	PBVCV1308
3″	1294	PBVCDA309	PBVCSR609	PBVCU1509	PBVCV1509
4″	2629	PBVCDA410	PBVCSR710	PBVCU1510	PBVCV1510

Note: All spring return actuators are factory standard as spring (fail) close. For spring (fail) open valves, add suffix "-FO" to the model number.

SPECIFICATIONS

Service: Compatible liquids or gases.
Body: 2-way.
Line Size: 1/2″ to 4″.
End Connections: Female NPT or socket (field selectable).
Pressure Limit: 1/2″ to 2″: 232 psi (16.0 bar) @ 73°F (23°C); 2-1/2″ to 4″: 150 psi (10.3 bar) @ 73°F (23°C) WOG. Vacuum: 29″ Hg.
Wetted Materials: Body, end connectors: PVC or CPVC; Ball, stem: PVC or CPVC; Seat: TFE; Stem seal: EPDM.
Temperature Limit: 32 to 140°F (0 to 60°C).
Other Materials: Stem bearing: Polypropylene (1-1/4″ and up).

ACTUATORS

Electric
Power Requirements: 120 VAC, 50/60 Hz, single phase. Optional 220 VAC, 24 VAC, 12 VDC, and 24 VDC.
Power Consumption: (Locked rotor current): Two position: 1/2″ to 1-1/2″: .55 A, 2″ to 4″: 0.75 A. Modulating: 1/2″ to 2″: 0.75 A, 2-1/2″: 1.1 A, 3″ and 4″: 0.75 A.
Cycle Time: (per 90°): Two position: 1/2″ to 1-1/2″: 2.5 s, 2″ and 2-1/2″: 5 s, 3″ and 4″: 15 s; Modulating: 1/2″ to 2-1/2″: 5 s, 3″ and 4″: 15 s.
Duty Cycle: Two position: 1/2″ to 1-1/2″: 75%, 2″ to 4″: 25%. Modulating: 75%.
Enclosure Rating: NEMA 4. Optional NEMA 7 (Class 1, Div. II groups A, B, C, D).
Housing Material: Aluminum with thermal bonding polyester powder finish.
Temperature Limit: 0 to 150°F (-18 to 65°C).
Conduit Connection: 1/2″ female NPT.
Modulating Input: 4-20 mA.
Standard Features: Manual override and visual position indicator except modulating units.

Pneumatic "DA" and "SR" Series
Type: DA series is double acting and SR series is spring return (rack and pinion).
Normal Supply Pressure: 80 psi (5.5 bar).
Maximum Supply Pressure: 120 psig (8 bar).
Air Connections: DA/SR1 to 5: 1/8″ female NPT, all other sizes: 1/4″ female NPT.
Air Consumption: (per stroke) DA1: 2.32 in3; DA2: 9.34 in3; DA3: 17.21 in3; DA4: 20.5 in3; SR2: 9.34 in3; SR3: 17.21 in3; SR6: 54.34 in3; SR7: 85.43 in3.
Cycle Time: (per 90°) DA1: .03 s; DA2: .04 s; DA3: .08 s; DA4: .12 s; SR2: .09 s; SR3: .14 s; SR6: .46 s; SR7: .83 s.
Housing Material: Anodized aluminum body and epoxy coated aluminum end caps.
Temperature Limit: -4 to 180°F (-20 to 82°C).
Accessory Mounting: NAMUR standard.
Standard Features: Visual position indicator.

Filters and Regulators: See page 446

Dwyer

SERIES DBV

BRASS BALL VALVE

Full Port, Economical, 600 psi (41 bar)

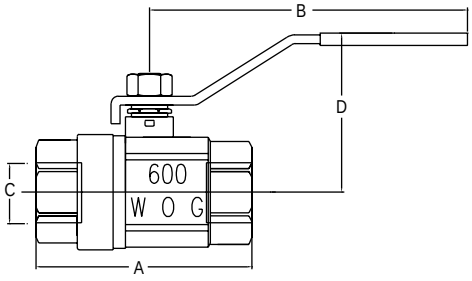

NPT Size	A in [mm]	B in [mm]	C in [mm]	D in [mm]
1/4″	1-39/64 [40.89]	3-5/32 [80.01]	5/16 [7.87]	1-47/64 [43.94]
3/8″	1-45/64 [43.18]	3-5/32 [80.01]	25/64 [9.91]	1-13/16 [45.97]
1/2″	2-3/16 [55.63]	3-55/64 [98.04]	19/32 [15.24]	2-11/64 [55.12]
3/4″	2-23/64 [59.94]	3-55/64 [98.04]	3/4 [19.05]	2-9/32 [57.91]
1″	2-7/8 [72.90]	4-13/32 [112.01]	63/64 [24.89]	2-11/16 [68.07]
1-1/4″	3-5/16 [84.07]	4-51/64 [121.92]	1-17/64 [32.00	3-5/32 [80.01]
1-1/2″	3-47/64 [95.00]	5-7/16 [137.92]	1-9/16 [39.88]	3-55/64 [98.04]
2″	4-13/32 [112.01]	5-7/16 [137.92]	1-31/32 [50.04]	4-13/64 [106.93]
2-1/2″	5-53/64 [148.08]	8-1/2 [215.90]	2-31/64 [62.99]	4-61/64 [125.98]
3″	6-29/64 [163.83]	8-1/2 [215.90]	2-61/64 [74.93]	5-1/8 [130.05]

The **Series DBV Brass Ball Valve** is an economical hand lever ball valve ideal for commercial or general industrial use. The Series DBV is the ideal choice for a manual shut off valve, along with many other applications. Valve body, body cap and ball are made of a quality brass for great durability. Seats and stem packing are constructed of PTFE for long lasting service as well. Blowout-proof stem provides safety in the event of overpressure. Full port design allows for maximum Cv while still retaining minimal pressure drop.

BENEFITS/FEATURES
- Low cost
- Blowout-proof stem

APPLICATIONS
- Gas or liquid flow control

SPECIFICATIONS

Service: Gases and liquids compatible with wetted materials.
End Connections: 1/4 to 3″ female NPT.
Pressure Limits: -29″ Hg to 600 psi (-736 mm Hg to 41 bar) WOG.
Temperature limit: -40 to 365ºF (-40 to 185ºC).
Wetted Materials: Body and body cap: Brass; Ball: Chrome plated brass; Stem: Brass; Seat and packing: PTFE.
Other Materials: Body gland and stem nut: Brass; Handle cover: Rubber; Handle: steel.

MODEL CHART

Model	Pipe Size	Model	Pipe Size
DBV-00	1/4″	**DBV-05**	1-1/4″
DBV-01	3/8″	**DBV-06**	1-1/2″
DBV-02	1/2″	**DBV-07**	2″
DBV-03	3/4″	**DBV-08**	2-1/2″
DBV-04	1″	**DBV-09**	3″

USA: California Proposition 65
⚠ **WARNING:** This product can expose you to chemicals including Lead, which is known to the State of California to cause cancer and birth defects or other reproductive harm. For more information go to www.P65Warnings.ca.gov.

SERIES BV2M

2-PIECE STAINLESS STEEL BALL VALVE

Full Port, 1000 psig (69 bar)

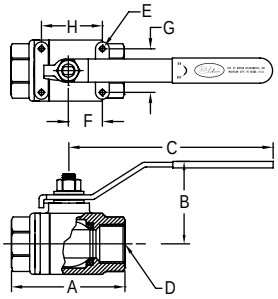

DIMENSIONS (IN)

A (Ref)	B (Ref)	C (Ref)	D (NPT)	E (UNC)	F (+.015)	G (+.015)	H (+.015)
1/4″	2.165	4.055	1/4″	(2) 3/16-24	0.500	1.102	N/A
3/8″	2.165	4.055	3/8″	(2) 3/16-24	0.500	1.102	N/A
1/2″	2.559	5.236	1/2″	(2) 3/16-24	0.500	1.102	N/A
3/4″	2.992	5.236	3/4″	(2) 3/16-24	0.882	1.378	N/A
1″	3.465	6.024	1″	(2) 3/16-24	0.882	1.378	N/A
1-1/4″	3.976	6.024	1-1/4″	(2) 1/4-20	1.000	1.500	N/A
1-1/2″	4.331	7.520	1-1/2″	(2) 1/4-20	1.000	1.500	N/A
2″	4.882	7.520	2″	(4) 1/4-20	1.000	1.500	2.000
2-1/2″	6.299	9.724	2-1/2″	(4) 1/4-20	1.382	2.165	2.764
3″	6.929	9.724	3″	(4) 1/4-20	1.382	2.165	2.764

The **Series BV2M 2-Piece Stainless Steel Ball Valve** is the economical choice for high quality, SS ball valves for use in chemical, petrochemical, pulp and paper and general applications. The Series BV2M body and endcaps are constructed of investment cast stainless steel, while stem is 316 stainless steel. Seats and body seals are 15% glass reinforced PTFE providing broad media compatibility and bubble tight shutoff to 1000 psig (69 bar). Internally loaded, blowout-proof stem provides safety in the event of overpressure. Full port design allows for maximum Cv with minimal pressure drop. Integral actuator mounting pads allows for ease of automation.

BENEFITS/FEATURES
- Wide chemical compatibility
- Bubble tight shut off to 1000 psig
- Blowout-proof stem
- Actuator mounting pad

APPLICATIONS
- Gas or liquid flow control
- Chemical, petrochemical, pulp and paper, and other general applications

SPECIFICATIONS

End Connections: Female NPT.
Pressure Limits: 1000 psi (69 bar) WOG, 150 psi (10.3 bar) SWP.
Wetted Materials: Body, ball, end cap: CF8M SS; Stem: 316 SS; Seat, thrust washer: RTFE; End gasket, stem packing: PTFE.
Temperature Limits: -20 to 450°F (-29 to 232°C).
Compliance: Meets the technical requirements of EU Directive 2011/65/EU (RoHS II).

MODEL CHART

Model	Size	Model	Size
BV2M100	1/4″	**BV2M105**	1-1/4″
BV2M101	3/8″	**BV2M106**	1-1/2″
BV2M102	1/2″	**BV2M107**	2″
BV2M103	3/4″	**BV2M108**	2-1/2″
BV2M104	1″	**BV2M109**	3″

Dwyer

SERIES DBVL & SWBV

LOW LEAD NPT BRASS BALL VALVES

Economical, Easy to Install

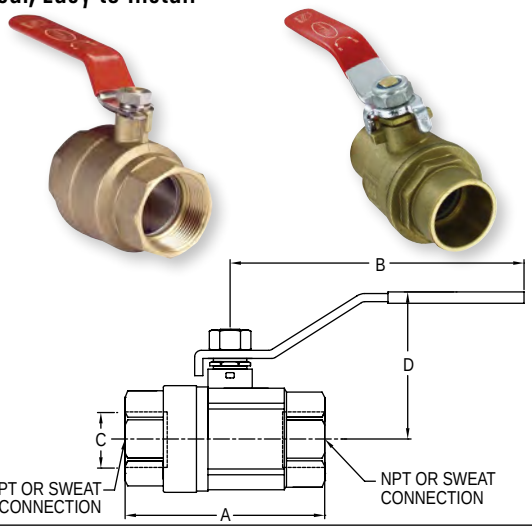

DBVL DIMENSIONS				
NPT Size	A in [mm]	B in [mm]	C in [mm]	D in [mm]
1/4″	1-3/4 [44.6]	3-5/32 [80]	25/64 [10]	1-47/64 [44.2]
3/8″	1-3/4 [44.6]	3-5/32 [80]	25/64 [10]	1-47/64 [44.2]
1/2″	2-3/64 [52]	4-1/64 [102]	19/32 [15]	1-7/8 [47.5]
3/4″	2-23/64 [60]	4-1/64 [102]	3/4 [19]	2-1/64 [51]
1″	2-3/4 [70]	4-17/32 [115]	63/64 [25]	2-23/32 [69]
1-1/4″	3-5/16 [84]	5 [127]	1-17/64 [32]	3-1/32 [77]
1-1/2″	3-21/32 [93]	5-19/32 [142]	1-37/64 [40]	3-1/32 [94]
2″	4-3/16 [106.2]	5-19/32 [142]	1-31/32 [50]	4 [101]
2-1/2″	5-3/8 [136.6]	8-21/32 [220]	2-33/64 [64]	1-49/64 [121]
3″	6-1/32 [153.4]	8-21/32 [220]	2-29/32 [74]	5-5/64 [129]

SWBV DIMENSIONS				
Sweat Size	A in [mm]	B in [mm]	C in [mm]	D in [mm]
1/4″	1-55/64 [47.24]	3-5/32 [80.01]	23/64 [9.14]	1-47/64 [43.94]
3/8″	1-55/64 [47.24]	3-5/32 [80.01]	1/2 [12.70]	1-47/64 [43.94]
1/2″	2-15/64 [56.90]	3-55/64 [98.04]	5/8 [15.75]	2-15/64 [56.90]
3/4″	2-51/64 [70.87]	3-55/64 [98.04]	7/8 [22.35]	2-23/64 [59.94]
1″	3-35/64 [89.92]	4-13/32 [112.01]	1-1/8 [28.70]	2-45/64 [68.58]
1-1/4″	4-1/8 [104.90]	4-51/64 [121.92]	1-3/8 [35.05]	3-3/64 [77.22]
1-1/2″	4-11/16 [119.13]	5-7/16 [137.92]	1-5/8 [41.40]	3-51/64 [96.27]
2″	5-35/64 [140.97]	5-7/16 [137.92]	2-1/8 [54.10]	4-5/32 [105.41]
2-1/2″	6-39/64 [167.89]	8-3/16 [207.77]	2-41/64 [67.06]	4-63/64 [126.49]
3″	6-57/64 [175.01]	9-11/16 [245.87]	3-13/32 [86.61]	5-1/16 [128.52]

The **Series DBVL & SWBV Low Lead NPT Brass Ball Valves** are economical hand lever ball valves ideal for commercial or industrial use where lead content is regulated. The valve body, body cap, and stem are made of a quality low lead brass for great durability and compatibility. The seats and stem packing are constructed of PTFE for long lasting service. A blowout-proof stem provides safety in the event of overpressure, and the full port design allows for the maximum flow coefficient while still retaining minimal pressure drop.

BENEFITS/FEATURES
- Low lead brass
- PTFE seats to stem
- Blowout-proof stem

APPLICATIONS
- Gas or liquid flow control

MODEL CHART			
Model	Pipe Size (in)	Model	Pipe Size (in)
DBVL-00	1/4	**SWBV-02**	1/2
DBVL-01	3/8	**SWBV-03**	3/4
DBVL-02	1/2	**SWBV-04**	1
DBVL-03	3/4	**SWBV-05**	1-1/4
SWBV-00	1/4	**SWBV-08**	2-1/2
SWBV-01	3/8	**SWBV-09**	3

SPECIFICATIONS

Service: Gases and liquids compatible with wetted materials.
End Connections: DBVL: 1/4″ to 3″ female NPT; SWBV: 1/4″ to 3″ sweat connections.
Pressure Limits: 1/4″ to 2″: -29″ Hg to 600 psi (-736 mm Hg to 41 bar) WOG; DBVL: 2-1/2″ to 3″: -29″ Hg to 250 psi (-736 mm Hg to 17 bar) WOG; SWBV: 2-1/2″ to 3″, -29″ Hg to 400 psi (-736 mm Hg to 27 psi) WOG.
Temperature Limits: -40° to 365°F (-40° to 185°C).
Wetted Materials: Body, body cap, and stem: Brass; Seat and packing: PTFE; Ball: DBVL: 1/4″ to 1″: Chrome plated brass; 1-1/4″ to 3″: SS; SWBV: SS.
Other Materials: Body gland and stem nut: Brass; Handle and handle nut: Steel; Handle cover: Rubber.
Compliance: Meets the technical requirements of EU Directive 2011/65/EU (RoHS II).

USA: California Proposition 65
⚠**WARNING:** This product can expose you to chemicals including Lead, which is known to the State of California to cause cancer and birth defects or other reproductive harm. For more information go to www.P65Warnings.ca.gov.

SERIES UBV

UNI-FLANGED BALL VALVE

Forged Brass Construction, Economical, 600 psi (41 bar)

NPT Size	A in [mm]	B in [mm]	C in [mm]
1/2″	1-63/43 [50.29]	2-7/8 [72.90]	35/64 [13.97]
3/4″	2-3/16 [55.37]	2-7/8 [72.90]	49/64 [19.30]
1″	2-31/64 [62.99]	2-7/8 [72.90]	61/64 [24.38]
1-1/4″	2-27/32 [72.14]	4 [101.60]	1-3/16 [29.97]
1-1/2″	3-15/64 [82.04]	4-5/32 [105.41]	1-31/64 [37.85]
2″	3-9/16 [90.42]	4-5/32 [105.41]	1-37/32 [46.99]

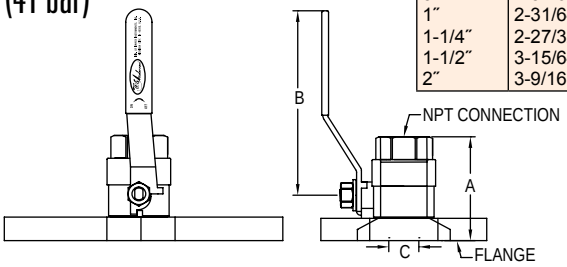

The **Series UBV Uni-Flanged Ball Valve** is an economical yet durable ball valve great for residential or industrial use. The forged brass body provides the strength and versatility needed for any application. The ball valve is constructed of quality brass in conjunction with PFTE ball seats to work with up to 600 psi (41 bar) of working pressure. Full port construction helps to reduce flow resistance while still maintaining great durability with it's uni-body construction. Available in a wide variety of sizes for versatile application.

BENEFITS/FEATURES
- Economical
- Unibody construction
- PTFE ball seats

APPLICATIONS
- Gas or liquid flow control

SPECIFICATIONS

Service: Gases and liquids compatible with wetted materials.
End Connections: Female NPT.
Pressure Limits: -29″ Hg to 600 psi (-736 mm Hg to 41.3 bar).
Temperature Limit: -40 to 365°F (-40 to 185°C).
Wetted Materials: Body and cap: Brass; Ball: Chrome plated brass; Stem: Brass; Stem packing and ball seat: PTFE.
Other Materials: Gland and stem nut: Brass; Handle: Steel; Grip: Rubber.

MODEL CHART			
Model	Pipe Size	Model	Pipe Size
UBV-01	3/4″	**UBV-04**	1-1/2″
UBV-02	1″	**UBV-05**	2″

USA: California Proposition 65
⚠**WARNING:** This product can expose you to chemicals including Lead, which is known to the State of California to cause cancer and birth defects or other reproductive harm. For more information go to www.P65Warnings.ca.gov.

Dwyer

SERIES MV

MINI BRASS BALL VALVES

Economical, Compact Design

Lever handle

Screwdriver slot

Tee handle

Wedge handle

Series MV Mini Brass Ball Valves are ideal for use in small, confined spaces, where larger valves are of no use. Installation is made easy with a choice of FxF or MxF process connections. Pure PTFE ball seats provide broad media compatibility and bubble tight shutoff. Double seal system allows valve to be operated in both directions.

BENEFITS/FEATURES
- Bubble tight shut off
- Economical
- Valve can be operated in both directions

APPLICATIONS
- Gas or liquid flow control
- Ideal for small, confined spaces

SPECIFICATIONS

Service: Gases and liquid compatible with wetted materials. Not rated for steam use.
End Connections: NPT, see model chart.
Pressure Limits: -29″ Hg to 450 psi (-736 mm Hg to 31 bar).
Temperature Limits: -4 to 250°F (-20 to 121°C).
Wetted Materials: Valve body: Chrome-plated brass; Valve ball: Chrome-plated brass; O-ring stem seal: Fluoroelastomer; Ball seats: PTFE.

MODEL CHART

Female x Female			Male x Female		
Model	**Handle Style**	**Pipe Size**	**Model**	**Handle Style**	**Pipe Size**
MVB-LF1	Lever handle	1/8″	**MVB-LM2**	Lever handle	1/4″
MVB-LF2	Lever handle	1/4″	**MVB-LM4**	Lever handle	1/2″
MVB-LF3	Lever handle	3/8″	**MVB-TM1**	Tee handle	1/8″
MVB-LF4	Lever handle	1/2″	**MVB-TM2**	Tee handle	1/4″
MVB-TF2	Tee handle	1/4″	**MVB-TM3**	Tee handle	3/8″
MVB-TF3	Tee handle	3/8″	**MVB-TM4**	Tee handle	1/2″
MVB-TF4	Tee handle	1/2″	**MVB-WM1**	Wedge handle	1/8″
MVB-WF1	Wedge handle	1/8″	**MVB-WM2**	Wedge handle	1/4″
MVB-WF2	Wedge handle	1/4″	**MVB-WM3**	Wedge handle	3/8″
MVB-WF3	Wedge handle	3/8″	**MVB-WM4**	Wedge handle	1/2″
MVB-WF4	Wedge handle	1/2″	**MV5-SM1**	Screwdriver slot	1/8″
MV5-SF1	Screwdriver slot	1/8″	**MV5-SM2**	Screwdriver slot	1/4″
MV5-SF3	Screwdriver slot	3/8″	**MV5-SM3**	Screwdriver slot	3/8″
MV5-SF4	Screwdriver slot	1/2″	**MV5-SM4**	Screwdriver slot	1/2″

USA: California Proposition 65
⚠**WARNING:** This product can expose you to chemicals including Lead, which is known to the State of California to cause cancer and birth defects or other reproductive harm. For more information go to www.P65Warnings.ca.gov.

SERIES SMV2

MINI STAINLESS STEEL BALL VALVE

Economical, Wide Chemical Compatibility, Compact

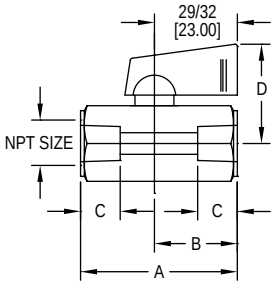

Female X female connection
SMV2-WFX

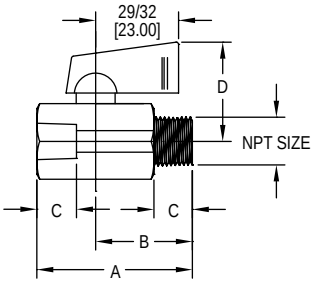

Male X female connection
SMV2-WMX

The **Series SMV2 Mini Stainless Steel Ball Valve** is ideal for small, confined spaces, where larger valves are unsuitable. The 316 SS and PTFE wetted materials are excellent for applications with corrosive media. The handles are made of a rigid nylon for extended durability. Installation is made easy with a choice of FxF or MxF process connections. PTFE ball seats provide broad media compatibility and bubble tight shutoff.

BENEFITS/FEATURES
- High working pressure
- Abrasion resistant
- Easy to install
- Economical
- Wide chemical compatibility

APPLICATIONS
- Gas or liquid flow control
- Ideal for small, confined spaces

SPECIFICATIONS

Service: Gases and liquids compatible with wetted materials. Not rated for steam use.
End Connections: NPT, see model chart.
Pressure Limits: 1/8″ to 3/8″, 1000 psi (68.9 bar) WOG; 1/2″, 800 psi (51.1 bar) WOG.
Temperature Limits: 212°F (100°C) maximum.
Wetted Materials: Valve body: Cast 316 SS (CF8M); Valve ball, insert and stem: 316 SS; Ball seat: PTFE.
Compliance: Meets the technical requirements of EU Directive 2011/65/EU (RoHS II).

MODEL CHART

Pipe Size	Female x Female Model	Male x Female Model
1/8″	**SMV2-WF1**	**SMV2-WM1**
1/4″	**SMV2-WF2**	**SMV2-WM2**
3/8″	**SMV2-WF3**	**SMV2-WM3**
1/2″	**SMV2-WF4**	**SMV2-WM4**

Dwyer

SERIES WE31

3-WAY NPT STAINLESS STEEL BALL VALVES

Full Port, Vented Ball, Electric or Pneumatic Actuators

WE31-DHD00-T1

WE31-DDA02-T1-AA01

WE31-DTD01-T3-A

WE31-DDA02-L1

WE31-DDA02-T3-NN05

The **Series WE31 3-Way NPT Stainless Steel Ball Valves** incorporate a full port valve for great flow rates with minimal pressure drop. The valve features a blowout-proof stem for added safety, reinforced PTFE seats and seals for longer life, and a 316 stainless steel (ASTM CF8M) ball for better performance. Actuators are direct mounted creating a compact assembly for tight spaces. Limit switches are able to be mounted directly to the valves allowing for remote position indication.

The Series WE31 can be configured with either an electric or pneumatic actuator. Electric actuators are available in weatherproof or explosion-proof, a variety of supply voltages and two-position or modulating control. Two-position actuators use the supply voltage to drive the valve open or closed, while the modulating actuator accepts a 4-20 mA input for valve positioning. Actuators feature thermal overload protection and permanently lubricated gear train.

The pneumatic double acting actuator uses an air supply to drive the valve open and closed. The actuator has two supply ports, with one driving the valve open and the other driving the valve closed. Spring return pneumatic actuators use the air supply to open the valve, and internally loaded springs return the valve to the closed position. Also available is the SN solenoid valve to electrically switch the air supply pressure between the air supply ports for opening and closing the valve. Actuators are constructed of anodized and epoxy coated aluminum for years of corrosion free service.

BENEFITS/FEATURES

- Capable of being configured to fit any application
- Limit switches can be mounted to manual valves for remote monitoring
- Vented ball to reduce operating torque
- Weatherproof or explosion-proof electric actuators
- Double acting or spring return anodized aluminum pneumatic actuators
- Full port design reduces the pressure drop across the valve

APPLICATIONS

- Gas or liquid flow control
- Ideal for quick bubble tight shut-off
- Mixing or diverting liquids and gases

SPECIFICATIONS

VALVE

Service: Compatible liquids and gases.
Body: 3-way.
Line Sizes: 1/2 to 2˝.
End Connections: Female NPT.
Pressure Limits: 28˝ Hg to 1000 psi (-0.7 to 69 bar) up to 250°F.
Wetted Materials: Body and ball: 316 SS (CF8M); Stem: 316 SS; Seat: RTFE/PTFE; Seal, washer, and packing: PTFE.
Temperature Limits: -20 to 392°F (-29 to 200°C).
Other Materials: O-ring: Fluoroelastomer; Handle: 304 SS; Washer: 301 SS; Stem nut, Locking device, Gland ring: 304 SS; Handle sleeve: PVC.
Agency Approvals: Meets the technical requirements of EU Directive 2011/65/EU (RoHS II).

ACTUATORS

Pneumatic "DA" and "SR" Series

Type: DA series is double acting and SR series is spring return (rack and pinion).
Normal Supply Pressure: DA: 40 to 115 psi (2.7 to 7.9 bar); SR: 80 psi (5.5 bar).
Maximum Supply Pressure: 120 psi (8.6 bar).
Air Connections: DA01: 1/8˝ female NPT; DA02 to DA04: 1/4˝ female NPT; SR03 to SR07: 1/4˝ female NPT.
Housing Material: Anodized aluminum body and epoxy coated aluminum end caps.
Temperature Limits: -40 to 176°F (-40 to 80°C).
Accessory Mounting: NAMUR standard.

Electric "TD" and "MD" Series

Power Requirements: 110 VAC, 220 VAC, 24 VAC or 24 VDC (MD models not available in 24 VDC).
Power Consumption: See instruction manual.
Cycle Time (per 90°): TD01: 4 s; MD01: 10 s; TD02 and MD02: 20 s; TD03 and MD03: 30 s.
Duty Rating: 85%.
Enclosure Rating: NEMA 4X (IP67).
Housing Material: Powder coated aluminum.
Temperature Limits: -22 to 140°F (-30 to 60°C).
Electrical Connection: 1/2˝ female NPT.
Modulating Input: 4-20 mA.
Standard Features: Manual override, position indicator, and TD models come with two limit switches.

Electric "TI" and "MI" Series

Power Requirements: 110 VAC, 220 VAC, 24 VAC or 24 VDC.
Power Consumption: See instruction manual.
Cycle Time (per 90°): See instruction manual.
Duty Rating: See instruction manual.
Enclosure Rating: NEMA 7, designed to meet hazardous locations: Class I, Group C and D; Class II, Group E, F and G; Division I and II.
Housing Material: Powder coated aluminum.
Temperature Limits: -40 to 140°F (-40 to 60°C).
Electrical Connection: 1/2˝ female NPT.
Modulating Input: 4-20 mA.
Standard Features: Position indicator and two limit switches.

3-WAY NPT STAINLESS STEEL BALL VALVES

Full Port, Vented Ball, Electric or Pneumatic Actuators

MODEL CHART						
Size	Cv (gal/min)	Popular Hand Operated Model	Popular Double Acting Pneumatic Model	Popular Spring Return Pneumatic Model	Popular NEMA 4X Two Position Electric (110 VAC) Model	Popular NEMA 4X Modulating Electric (110 VAC) Model
1/2″	11	**WE31-CHD00-T1**	**WE31-CDA02-T2**	**WE31-CSR02-T2**	**WE31-CTD01-T2-A**	**WE31-CMD01-T2-A**
3/4″	14	**WE31-DHD00-T1**	**WE31-DDA02-T2**	**WE31-DSR03-T2**	**WE31-DTD01-T2-A**	**WE31-DMD01-T2-A**
1″	18	**WE31-EHD00-T1**	**WE31-EDA03-T2**	**WE31-ESR04-T2**	**WE31-ETD02-T2-A**	**WE31-EMD02-T2-A**
1-1/4″	43	**WE31-FHD00-T1**	**WE31-FDA03-T2**	**WE31-FSR05-T2**	**WE31-FTD02-T2-A**	**WE31-FMD02-T2-A**
1-1/2″	84	**WE31-GHD00-T1**	**WE31-GDA04-T2**	**WE31-GSR06-T2**	**WE31-GTD03-T2-A**	**WE31-GMD03-T2-A**
2″	90	**WE31-HHD00-T1**	**WE31-HDA04-T2**	**WE31-HSR07-T2**	**WE31-HTD03-T2-A**	**WE31-HMD03-T2-A**

MODEL CHART - HAND OPERATED AND PNEUMATIC ACTUATOR							
Example	**WE31**	**-CSR02**	**-T1**	**-A**	**A**	**00**	**WE31-CSR02-T1-AA00**
Series	WE31						316 SS 3-way NPT
Size and Range		CHD00					1/2″ hand operated
		DHD00					3/4″ hand operated
		EHD00					1″ hand operated
		FHD00					1-1/4″ hand operated
		GHD00					1-1/2″ hand operated
		HHD00					2″ hand operated
		CDA02					1/2″ double acting
		DDA02					3/4″ double acting
		EDA03					1″ double acting
		FDA03					1-1/4″ double acting
		GDA04					1-1/2″ double acting
		HDA04					2″ double acting
		CSR02					1/2″ spring return
		DSR03					3/4″ spring return
		ESR04					1″ spring return
		FSR05					1-1/4″ spring return
		GSR06					1-1/2″ spring return
		HSR07					2″ spring return
Valve Position			T1				Flow path A
			T2				Flow path B
			T3				Flow path C
			T4				Flow path D
			L1				Flow path E
Solenoid				N			No solenoid
				A			NEMA 4X NAMUR solenoid
Solenoid Voltage					N		No solenoid
					A		110 VAC
					B		220 VAC
					C		24 VAC
					D		24 VDC
					E		12 VDC
Positioner and Switches						00	None
						01	42AD0 exp limit switch
						02	45VD0 exp position transmitter
						03	42AD0-B ATEX limit switch
						04	42AD0-IE IECEX limit switch
						06	QV-210101 poly limit switch
						07	VPS and P1 prox switch
						08	265ER-D5 positioner
						09	285ER-D5 smart positioner

MODEL CHART - ELECTRIC ACTUATOR					
Example	**WE31**	**-DMI02**	**-T2**	**-A**	**WE31-DMI02-T2-A**
Series	WE31				316 SS 3-way NPT
Size and Range		CTD01			1/2″ NEMA 4X two-position
		DTD01			3/4″ NEMA 4X two-position
		ETD02			1″ NEMA 4X two-position
		FTD02			1-1/4″ NEMA 4X two-position
		GTD03			1-1/2″ NEMA 4X two-position
		HTD03			2″ NEMA 4X two-position
		CMD01			1/2″ NEMA 4X modulating
		DMD01			3/4″ NEMA 4X modulating
		EMD02			1″ NEMA 4X modulating
		FMD02			1-1/4″ NEMA 4X modulating
		GMD03			1-1/2″ NEMA 4X modulating
		HMD03			2″ NEMA 4X modulating
		CTI01			1/2″ exp two-position
		DTI02			3/4″ exp two-position
		ETI02			1″ exp two-position
		FTI04			1-1/4″ exp two-position
		GTI05			1-1/2″ exp two-position
		HTI06			2″ exp two-position
		CMI01			1/2″ exp electric modulating
		DMI02			3/4″ exp electric modulating
		EMI02			1″ exp electric modulating
		FMI04			1-1/4″ exp electric modulating
		GMI05			1-1/2″ exp electric modulating
		HMI06			2″ exp electric modulating
Valve Position			T1		Flow path A
			T2		Flow path B
			T3		Flow path C
			T4		Flow path D
			L1		Flow path E
Actuator Voltage				A	110 VAC
				B	220 VAC
				C	24 VAC
				D	24 VDC

REPAIR KIT	
Model	**Valve Series and Size**
VRK-36	WE31-1/2″
VRK-37	WE31-3/4″
VRK-38	WE31-1″
VRK-40	WE31-1-1/2″
VRK-41	WE31-2″
Parts List - Included in Kit	
1 PTFE thrust washer	
1 FKM O-ring	
2 PTFE stem packing	
2 PTFE seals	
2 RTFE seats	

ACCESSORIES	
Model	**Description**
VB-01	Volume booster

"T" Port Ball

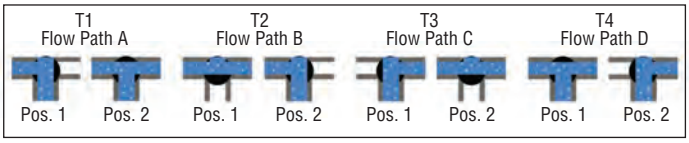

"L" Port Ball

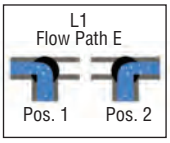

Dwyer

SERIES WE35

3-WAY NPT BRASS BALL VALVES

Full Port, Electric or Pneumatic Actuators

WE35-DHD00-T1

WE35-DDA02-L1

WE35-DDA02-T1-AA01

WE35-DTD01-T3-A

The **Series WE35 3-Way NPT Brass Ball Valves** incorporate a full port 3-way brass ball valve for great flow rates with minimal pressure drop. The valve features a blowout proof stem for added safety, reinforced PTFE seats and seals for longer life, and a brass ball for better performance. Actuators are direct mounted creating a compact assembly for tight spaces.

The Series WE35 can be configured with either an electric or pneumatic actuator. Electric actuators are available in weatherproof or explosion-proof, a variety of supply voltages, and two-position or modulating control. Two-position actuators use the supply voltage to drive the valve open or closed, while the modulating actuator accepts a 4-20 mA input for valve positioning. Actuators feature thermal overload protection and permanently lubricated gear train.

The pneumatic double acting actuator uses an air supply to drive the valve open and closed. The actuator has two supply ports, with one driving the valve open and the other driving the valve closed. Spring return pneumatic actuators use the air supply to open the valve and internally loaded springs return the valve to the closed position. Also available is the SN solenoid valve to electrically switch the air supply pressure between the air supply ports for opening and closing the valve. Actuators are constructed of anodized and epoxy coated aluminum for years of corrosion free service.

BENEFITS/FEATURES

- Capable of being configured to fit most applications
- Limit switches can be mounted to manual valves for remote monitoring
- Weatherproof or explosion-proof electric actuators
- Double acting or spring return anodized aluminum pneumatic actuators
- Full port design reduces the pressure drop across the valve

APPLICATIONS

- Gas or liquid flow control
- Ideal for quick bubble tight shut-off
- Mixing or diverting liquids and gases

SPECIFICATIONS

VALVE

Service: Compatible liquids and gases.
Body: 3-way.
Line Sizes: 1/2 to 2″.
End Connections: Female NPT.
Pressure Limits: 600 psi (41 bar) WOG.
Wetted Materials: Body, ball, and stem: Brass; Seat, seal, and packing: PTFE.
Temperature Limits: -20 to 425°F (-30 to 220°C).
Other Materials: O-ring: NBR; Handle, stem nut, ferrule: SS; Handle sleeve: Vinyl; Body and cap: Nickle plated.
Compliance: Meets the technical requirements of EU Directive 2011/65/EU (RoHS II).

ACTUATORS

Pneumatic "DA" and "SR" Series

Type: DA series is a double acting and SR series is a spring return (rack and pinion).
Normal Supply Pressure: DA: 40 to 115 psi (2.7 to 7.9 bar); SR: 80 psi (5.5 bar).
Maximum Supply Pressure: 120 psi (8.6 bar).
Air Connections: DA02 to DA03: 1/4″ female NPT; SR02 to SR04: 1/4″ female NPT.
Housing Material: Anodized aluminum body and epoxy coated aluminum end caps.
Temperature Limits: -40 to 176°F (-40 to 80°C).
Accessory Mounting: NAMUR standard.

Electric "TD" and "MD" Series

Power Requirements: 110 VAC, 220 VAC, 24 VAC, or 24 VDC (MD models not available in 24 VDC).
Power Consumption: See instruction manual.
Cycle Time (per 90°): TD01: 4 s; MD01: 10 s; TD02: 20 s).
Duty Rating: 85%.
Enclosure Rating: NEMA 4X (IP67).
Housing Material: Powder coated aluminum.
Temperature Limits: -22 to 140°F (-30 to 60°C).
Electrical Connection: 1/2″ female NPT.
Modulating Input: 4-20 mA.
Standard Features: Manual override, position indicator, and TD models come with two limit switches.

Electric "TI" and "MI" Series

Power Requirements: 110 VAC, 220 VAC, 24 VAC, 24 VDC.
Power Consumption: See instruction manual.
Cycle Time (per 90°): See instruction manual.
Duty Rating: See instruction manual.
Enclosure Rating: NEMA 7, designed to meet hazardous locations: Class I, group C and D; Class II, group E, F and G; division I and II.
Housing Material: Powder coated aluminum.
Temperature Limits: -40 to 140°F (-40 to 60°C).
Electrical Connection: 1/2″ female NPT.
Modulating Input: 4-20 mA.
Standard Features: Position indicator and two limit switches.

USA: California Proposition 65
⚠**WARNING:** This product can expose you to chemicals including Lead, which is known to the State of California to cause cancer and birth defects or other reproductive harm. For more information go to www.P65Warnings.ca.gov.

3-WAY NPT BRASS BALL VALVES

Full Port, Electric or Pneumatic Actuators

MODEL CHART						
Size	Cv (gal/min)	Popular Hand Operated Model	Popular Double Acting Pneumatic Model	Popular Spring Return Pneumatic Model	Popular NEMA 4X Two Position Electric (110 VAC) Model	Popular NEMA 4X Modulating Electric (110 VAC) Model
1/2″	13	**WE35-CHD00-T1**	**WE35-CDA02-T2**	**WE35-CSR02-T2**	**WE35-CTD01-T2-A**	**WE35-CMD01-T2-A**
3/4″	37	**WE35-DHD00-T1**	**WE35-DDA02-T2**	**WE35-DSR02-T2**	**WE35-DTD01-T2-A**	**WE35-DMD01-T2-A**
1″	49	**WE35-EHD00-T1**	**WE35-EDA02-T2**	**WE35-ESR03-T2**	**WE35-ETD01-T2-A**	**WE35-EMD01-T2-A**
1-1/4″	59	**WE35-FHD00-T1**	**WE35-FDA03-T2**	**WE35-FSR03-T2**	**WE35-FTD01-T2-A**	**WE35-FMD01-T2-A**
1-1/2″	100	**WE35-GHD00-T1**	**WE35-GDA03-T2**	**WE35-GSR03-T2**	**WE35-GTD01-T2-A**	**WE35-GMD01-T2-A**
2″	115	**WE35-HHD00-T1**	**WE35-HDA03-T2**	**WE35-HSR04-T2**	**WE35-HTD02-T2-A**	**WE35-HMD02-T2-A**

MODEL CHART - HAND OPERATED AND PNEUMATIC ACTUATOR							
Example	**WE35**	**-CSR02**	**-T1**	**-A**	**A**	**00**	**WE35-CSR02-AA00**
Series	WE35						Brass 2-piece NPT
Size and Range		CHD00					1/2″ hand operated
		DHD00					3/4″ hand operated
		EHD00					1″ hand operated
		FHD00					1-1/4″ hand operated
		GHD00					1-1/2″ hand operated
		HHD00					2″ hand operated
		CDA02					1/2″ double acting
		DDA02					3/4″ double acting
		EDA02					1″ double acting
		FDA03					1-1/4″ double acting
		GDA03					1-1/2″ double acting
		HDA03					2″ double acting
		CSR02					1/2″ spring return
		DSR02					3/4″ spring return
		ESR03					1″ spring return
		FSR03					1-1/4″ spring return
		GSR03					1-1/2″ spring return
		HSR04					2″ spring return
Valve Position			T1				Flow path A
			T2				Flow path B
			T3				Flow path C
			T4				Flow path D
			L1				Flow path E
Solenoid				N			No solenoid
				A			NEMA 4X NAMUR solenoid
Solenoid Voltage					N		No solenoid
					A		110 VAC
					B		220 VAC
					C		24 VAC
					D		24 VDC
					E		12 VDC
Positioner and Switches						00	None
						01	42AD0 exp limit switch
						02	45VD0 exp position transmitter
						03	42AD0-B ATEX limit switch
						04	42AD0-IE IECEX limit switch
						06	QV-210101 poly limit switch
						07	VPS and P1 prox switch
						08	265ER-D5 positioner
						09	285ER-D5 smart positioner

MODEL CHART - ELECTRIC ACTUATOR					
Example	**WE35**	**-GMD01**	**-T2**	**-A**	**WE35-GMD01-A**
Series	WE35				Brass 2-piece NPT
Size and Range		CTD01			1/2″ electric two-position
		DTD01			3/4″ electric two-position
		ETD01			1″ electric two-position
		FTD01			1-1/4″ electric two-position
		GTD01			1-1/2″ electric two-position
		HTD02			2″ electric two-position
		CMD01			1/2″ electric modulating
		DMD01			3/4″ electric modulating
		EMD01			1″ electric modulating
		FMD01			1-1/4″ electric modulating
		GMD01			1-1/2″ electric modulating
		HMD02			2″ electric modulating
		CTI01			1/2″ exp electric two-position
		DTI01			3/4″ exp electric two-position
		ETI02			1″ exp electric two-position
		FTI02			1-1/4″ exp electric two-position
		GTI02			1-1/2″ exp electric two-position
		HTI03			2″ exp electric two-position
		CMI01			1/2″ exp electric two-position
		DMI01			3/4″ exp electric two-position
		EMI02			1″ exp electric two-position
		FMI02			1-1/4″ exp electric two-position
		GMI02			1-1/2″ exp electric two-position
		HMI03			2″ exp electric two-position
Valve Position			T1		Flow path A
			T2		Flow path B
			T3		Flow path C
			T4		Flow path D
			L1		Flow path E
Actuator Voltage				A	110 VAC
				B	220 VAC
				C	24 VAC
				D	24 VDC

USA: California Proposition 65
⚠**WARNING:** This product can expose you to chemicals including Lead, which is known to the State of California to cause cancer and birth defects or other reproductive harm. For more information go to www.P65Warnings.ca.gov.

Dwyer

SERIES WE33

3-WAY TRI-CLAMP STAINLESS STEEL BALL VALVES

Cavity Filled, Electric and Pneumatic Actuators

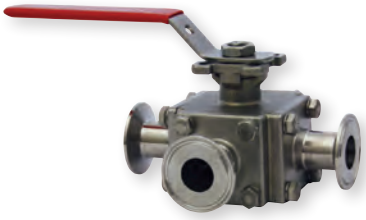

WE33-DHD00-T2

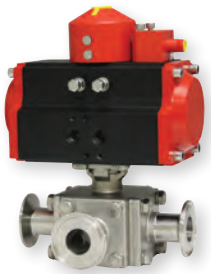

WE33-ESR03-T1-NN07

WE33-DDA01-L1-AA06

WE33-DTD01-T3-A

WE33-DTI01-T2-A

The **Series WE33 3-Way Tri-Clamp Stainless Steel Ball Valves** incorporate a full port 3-way tri-clamp SS ball valve for great flow rates with minimal pressure drop. The valve features a blowout-proof stem for added safety, reinforced PTFE seats and seals for longer life, and a 316 stainless steel (ASTM CF8M) ball for better performance. Actuators are direct mounted creating a compact assembly for tight spaces. Limit switches are able to be mounted directly to the valves allowing for remote position indication.

The Series WE33 can be configured with either an electric or pneumatic actuator. Electric actuators are available in weatherproof or explosion-proof, a variety of supply voltages and two-position or modulating control. Two-position actuators use the supply voltage to drive the valve open or close, while the modulating actuator accepts a 4-20 mA input for valve positioning. Actuators feature thermal overload protection and permanently lubricated gear train.

The pneumatic double acting actuator uses an air supply to drive the valve open and closed. The actuator has two supply ports, with one driving the valve open and the other driving the valve closed. Spring return pneumatic actuators use the air supply to open the valve, and internally loaded springs return the valve to the closed position. Also available is the SN solenoid valve to electrically switch the air supply pressure between the air supply ports for opening and closing the valve. Actuators are constructed of anodized and epoxy coated aluminum for years of corrosion free service.

BENEFITS/FEATURES

- Capable of being configured to fit any application
- Limit switches can be mounted to manual valves for remote monitoring
- Cavity filled valve for sanitary applications
- Weatherproof or explosion-proof electric actuators
- Double acting or spring return anodized aluminum pneumatic actuators
- Full port design reduces the pressure drop across the valve

APPLICATIONS

- Gas or liquid flow control
- Ideal for quick bubble tight shut-off
- Mixing or diverting liquids and gases

SPECIFICATIONS

VALVE

Service: Compatible liquids and gases.
Body: 3-way.
Line Sizes: 1/2 to 2˝.
End Connections: Tri-clamp ends.
Pressure Limits: 20˝ Hg to 1000 psi (-0.7 to 69 bar) up to 250°F.
Wetted Materials: Body and ball: 316 SS (CF8M); Stem: 316 SS; Seat: RTFE/PTFE; Seal, washer, and packing: PTFE.
Temperature Limits: -20 to 392°F (-29 to 200°C).
Other Materials: O-ring: Fluoroelastomer; Handle: 304 SS; Washer: 301 SS; Stem nut, locking device, gland ring: 304 SS; Handle sleeve: PVC.
Agency Approvals: Meets the technical requirements of EU Directive 2011/65/EU (RoHS II).

ACTUATORS

Pneumatic "DA" and "SR" Series

Type: DA series is double acting and SR series is spring return (rack and pinion).
Normal Supply Pressure: DA: 40 to 115 psi (2.7 to 7.9 bar); SR: 80 psi (5.5 bar).
Maximum Supply Pressure: 120 psi (8.6 bar).
Air Connections: DA01: 1/8˝ female NPT; DA02 to DA03: 1/4˝ female NPT; SR02 to SR04: 1/4˝ female NPT.
Housing Material: Anodized aluminum body and epoxy coated aluminum end caps.
Temperature Limits: -40 to 176°F (-40 to 80°C).
Accessory Mounting: NAMUR standard.

Electric "TD" and "MD" Series

Power Requirements: 110 VAC, 220 VAC, 24 VAC or 24 VDC (MD models not available in 24 VDC).
Power Consumption: See instruction manual.
Cycle Time (per 90°): TD01: 4 s; MD01: 10 s; TD02 and MD02: 20 s.
Duty Rating: 85%.
Enclosure Rating: NEMA 4X (IP67).
Housing Material: Powder coated aluminum.
Temperature Limits: -22 to 140°F (-30 to 60°C).
Electrical Connection: 1/2˝ female NPT.
Modulating Input: 4-20 mA.
Standard Features: Manual override, position indicator, and TD models come with two limit switches.

Electric "TI" and "MI" Series

Power Requirements: 110 VAC, 220 VAC, 24 VAC or 24 VDC.
Power Consumption: See instruction manual.
Cycle Time (per 90°): See instruction manual.
Duty Rating: See instruction manual.
Enclosure Rating: NEMA 7, designed to meet hazardous locations: Class I, Group C and D; Class II, Group E, F and G; Division I and II.
Housing Material: Powder coated aluminum.
Temperature Limits: -40 to 140°F (-40 to 60°C).
Electrical Connection: 1/2˝ female NPT.
Modulating Input: 4-20 mA.
Standard Features: Position indicator and two limit switches.

3-WAY TRI-CLAMP STAINLESS STEEL BALL VALVES

Cavity Filled, Electric and Pneumatic Actuators

MODEL CHART						
Size	Cv (gal/min)	Popular Hand Operated Model	Popular Double Acting Pneumatic Model	Popular Spring Return Pneumatic Model	Popular NEMA 4X Two Position Electric (110 VAC) Model	Popular NEMA 4X Modulating Electric (110 VAC) Model
1/2″	14.39	**WE33-CHD00-T2**	**WE33-CDA01-T2**	**WE33-CSR02-T2**	**WE33-CTD01-T2-A**	**WE33-CMD01-T2-A**
3/4″	42.25	**WE33-DHD00-T2**	**WE33-DDA01-T2**	**WE33-DSR02-T2**	**WE33-DTD01-T2-A**	**WE33-DMD01-T2-A**
1″	86.17	**WE33-EHD00-T2**	**WE33-EDA02-T2**	**WE33-ESR03-T2**	**WE33-ETD01-T2-A**	**WE33-EMD01-T2-A**
1-1/2″	223.61	**WE33-GHD00-T2**	**WE33-GDA02-T2**	**WE33-GSR04-T2**	**WE33-GTD02-T2-A**	**WE33-GMD02-T2-A**
2″	437.98	**WE33-HHD00-T2**	**WE33-HDA03-T2**	**WE33-HSR04-T2**	**WE33-HTD02-T2-A**	**WE33-HMD02-T2-A**

MODEL CHART - HAND OPERATED AND PNEUMATIC ACTUATOR							
Example	**WE33**	**-CSR02**	**-T4**	**-N**	**N**	**07**	**WE33-CSR02-T4-NN07**
Series	WE33						316 SS 3-way tri-clamp
Size and Actuator		CHD00					1/2″ hand operated
		DHD00					3/4″ hand operated
		EHD00					1″ hand operated
		GHD00					1-1/2″ hand operated
		HHD00					2″ hand operated
		CDA01					1/2″ double acting
		DDA01					3/4″ double acting
		EDA02					1″ double acting
		GDA02					1-1/2″ double acting
		HDA03					2″ double acting
		CSR02					1/2″ spring return
		DSR02					3/4″ spring return
		ESR03					1″ spring return
		GSR04					1-1/2″ spring return
		HSR04					2″ spring return
Valve Position			T1				Flow path A
			T2				Flow path B
			T3				Flow path C
			T4				Flow path D
			L1				Flow path E
Solenoid				N			No solenoid
				A			NEMA 4X NAMUR solenoid
Solenoid Voltage					N		No solenoid
					A		110 VAC
					B		220 VAC
					C		24 VAC
					D		24 VDC
					E		12 VDC
Positioner and Switches						00	None
						01	42AD0 exp limit switch
						02	45VD0 exp position transmitter
						03	42AD0-B ATEX limit switch
						04	42AD0-IE IECEX limit switch
						06	QV-210101 poly limit switch
						07	VPS and P1 prox switch
						08	265ER-D5 positioner
						09	285ER-D5 smart positioner

MODEL CHART - ELECTRIC ACTUATOR					
Example	**WE33**	**-DMD01**	**-T2**	**-B**	**WE33-DMD01-T2-B**
Series	WE33				316 SS 3-way tri-clamp
Size and Actuator		CTD01			1/2″ NEMA 4X two-position
		DTD01			3/4″ NEMA 4X two-position
		ETD01			1″ NEMA 4X two-position
		GTD02			1-1/2″ NEMA 4X two-position
		HTD02			2″ NEMA 4X two-position
		CMD01			1/2″ NEMA 4X modulating
		DMD01			3/4″ NEMA 4X modulating
		EMD01			1″ NEMA 4X modulating
		GMD02			1-1/2″ NEMA 4X modulating
		HMD02			2″ NEMA 4X modulating
		CTI01			1/2″ exp two-position
		DTI01			3/4″ exp two-position
		ETI02			1″ exp two-position
		GTI02			1-1/2″ exp two-position
		HTI03			2″ exp two-position
		CMI01			1/2″ exp electric modulating
		DMI01			3/4″ exp electric modulating
		EMI02			1″ exp electric modulating
		GMI02			1-1/2″ exp electric modulating
		HMI03			2″ exp electric modulating
Valve Position			T1		Flow path A
			T2		Flow path B
			T3		Flow path C
			T4		Flow path D
			L1		Flow path E
Actuator Voltage				A	110 VAC
				B	220 VAC
				C	24 VAC
				D	24 VDC

REPAIR KIT	
Model	**Valve Series and Size**
VRK-42	WE33-1/2″
VRK-43	WE33-3/4″
VRK-44	WE33-1″
VRK-45	WE33-1-1/2″
VRK-46	WE33-2″
Parts List - Included in Kit	
1 PTFE thrust washer	
1 FKM O-ring	
2 PTFE stem packing	
2 PTFE seals	
2 RTFE seats	

ACCESSORIES	
Model	**Description**
VB-01	Volume booster

"T" Port Ball

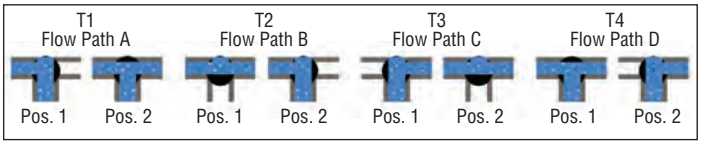

"L" Port Ball

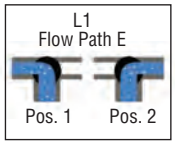

Dwyer

SERIES WE34

3-WAY FLANGED STAINLESS STEEL BALL VALVES

150# ANSI Flange, Vented Ball, Electric or Pneumatic Actuators

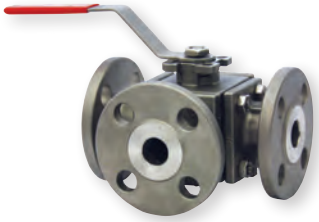

WE34-DHD00-L1

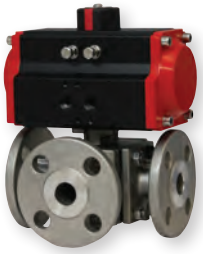

WE34-DDA03-T2

WE34-DDA03-T1-AA01

WE34-DDA03-T2-NN08

WE34-DTI03-T3-A

The **Series WE34 3-Way Flanged Stainless Steel Ball Valves** incorporate a full port 3-way flanged SS ball valve for great flow rates with minimal pressure drop. The valve features a blowout-proof stem for added safety, reinforced PTFE seats and seals for longer life, and a 316 stainless steel (ASTM CF8M) ball for better performance. Actuators are direct mounted creating a compact assembly for tight spaces. Limit switches are able to be mounted directly to the valves allowing for remote position indication.

The Series WE34 can be configured with either an electric or pneumatic actuator. Electric actuators are available in weatherproof or explosion-proof, a variety of supply voltages and two-position or modulating control. Two-position actuators use the supply voltage to drive the valve open or closed, while the modulating actuator accepts a 4-20 mA input for valve positioning. Actuators feature thermal overload protection and permanently lubricated gear train.

The pneumatic double acting actuator uses an air supply to drive the valve open and closed. The actuator has two supply ports, with one driving the valve open and the other driving the valve closed. Spring return pneumatic actuators use the air supply to open the valve and internally loaded springs return the valve to the closed position. Also available is the SN solenoid valve to electrically switch the air supply pressure between the air supply ports for opening and closing the valve. Actuators are constructed of anodized and epoxy coated aluminum for years of corrosion free service.

BENEFITS/FEATURES

- Capable of being configured to fit any application
- Limit switches can be mounted to manual valves for remote monitoring
- Vented ball to reduce operating torque
- Weatherproof or explosion-proof electric actuators
- Double acting or spring return anodized aluminum pneumatic actuators
- Full port design reduces the pressure drop across the valve
- Eliminates threads and reduces installation and maintenance time

APPLICATIONS

- Gas or liquid flow control
- Ideal for quick bubble tight shut-off
- Mixing or diverting liquids and gases

SPECIFICATIONS

VALVE

Service: Compatible liquids and gases.
Body: 3-way.
Line Sizes: 1/2 to 3˝.
End Connections: 150# ANSI flange.
Pressure Limits: 28˝ Hg to 275 psi (-0.7 to 19 bar) up to 392°F.
Wetted Materials: Body and ball: 316 SS (CF8M); Stem: 316 SS; Seat: RTFE/PTFE; Seal, washer, and packing: PTFE.
Temperature Limits: -20 to 392°F (-29 to 200°C).
Other Materials: O-ring: Fluoroelastomer; Handle: 304 SS; Washer: 301 SS; Stem nut, locking device, gland ring: 304 SS; Handle sleeve: PVC.
Agency Approvals: Meets the technical requirements of EU Directive 2011/65/EU (RoHS II).

ACTUATORS

Pneumatic "DA" and "SR" Series

Type: DA series is double acting and SR series is spring return (rack and pinion).
Normal Supply Pressure: DA: 40 to 115 psi (2.7 to 7.9 bar); SR: 80 psi (5.5 bar).
Maximum Supply Pressure: 120 psi (8.6 bar).
Air Connections: DA01: 1/8˝ female NPT; DA02 to DA08: 1/4˝ female NPT; SR03 to SR09: 1/4˝ female NPT.
Housing Material: Anodized aluminum body and epoxy coated aluminum end caps.
Temperature Limits: -40 to 176°F (-40 to 80°C).
Accessory Mounting: NAMUR standard.

Electric "TD" and "MD" Series

Power Requirements: 110 VAC, 220 VAC, 24 VAC or 24 VDC (MD models not available in 24 VDC).
Power Consumption: See instruction manual.
Cycle Time (per 90°): TD01: 4 s; MD01: 10 s; TD02 and MD02: 20 s; TD03 and MD03: 30 s; TD04 and MD04: 30 s.
Duty Rating: 85%.
Enclosure Rating: NEMA 4X (IP67).
Housing Material: Powder coated aluminum.
Temperature Limits: -22 to 140°F (-30 to 60°C).
Electrical Connection: 1/2˝ female NPT.
Modulating Input: 4-20 mA.
Standard Features: Manual override, position indicator, and TD models come with two limit switches.

Electric "TI" and "MI" Series

Power Requirements: 110 VAC, 220 VAC, 24 VAC or 24 VDC.
Power Consumption: See instruction manual.
Cycle Time (per 90°): See instruction manual.
Duty Rating: See instruction manual.
Enclosure Rating: NEMA 7, designed to meet hazardous locations: Class I, Group C and D; Class II, Group E, F and G; Division I and II.
Housing Material: Powder coated aluminum.
Temperature Limits: -40 to 140°F (-40 to 60°C).
Electrical Connection: 1/2˝ female NPT.
Modulating Input: 4-20 mA.
Standard Features: Position indicator and two limit switches.

3-WAY FLANGED STAINLESS STEEL BALL VALVES

150# ANSI Flange, Vented Ball, Electric or Pneumatic Actuators

MODEL CHART						
Size	Cv (gal/min)	Popular Hand Operated Model	Popular Double Acting Pneumatic Model	Popular Spring Return Pneumatic Model	Popular NEMA 4X Two Position Electric (110 VAC) Model	Popular NEMA 4X Modulating Electric (110 VAC) Model
1/2″	26	**WE34-CHD00-T2**	**WE34-CDA02-T2**	**WE34-CSR03-T2**	**WE34-CTD02-T2-A**	**WE34-CMD01-T2-A**
3/4″	50	**WE34-DHD00-T2**	**WE34-DDA02-T2**	**WE34-DSR03-T2**	**WE34-DTD02-T2-A**	**WE34-DMD01-T2-A**
1″	94	**WE34-EHD00-T2**	**WE34-EDA03-T2**	**WE34-ESR05-T2**	**WE34-ETD02-T2-A**	**WE34-EMD02-T2-A**
1-1/2″	260	**WE34-GHD00-T2**	**WE34-GDA05-T2**	**WE34-GSR06-T2**	**WE34-GTD03-T2-A**	**WE34-GMD03-T2-A**
2″	380	**WE34-HHD00-T2**	**WE34-HDA06-T2**	**WE34-HSR07-T2**	**WE34-HTD03-T2-A**	**WE34-HMD03-T2-A**
2-1/2″	650	**WE34-IHD00-T2**	**WE34-IDA07-T2**	**WE34-ISR08-T2**	**WE34-ITD04-T2-A**	**WE34-IMD04-T2-A**
3″	1000	**WE34-JHD00-T2**	**WE34-JDA08-T2**	**WE34-JSR09-T2**	**WE34-JTD04-T2-A**	**WE34-JMD04-T2-A**

MODEL CHART - HAND OPERATED AND PNEUMATIC ACTUATOR							
Example	**WE34**	**-JDA08**	**-T1**	**-A**	**B**	**00**	**WE34-JDA08-T1-AB00**
Series	WE34						316 SS 3-way 150# ANSI flange
Size and Actuator		CHD00					1/2″ hand operated
		DHD00					3/4″ hand operated
		EHD00					1″ hand operated
		GHD00					1-1/2″ hand operated
		HHD00					2″ hand operated
		IHD00					2-1/2″ hand operated
		JHD00					3″ hand operated
		CDA02					1/2″ double acting
		DDA02					3/4″ double acting
		EDA03					1″ double acting
		GDA05					1-1/2″ double acting
		HDA06					2″ double acting
		IDA07					2-1/2″ double acting
		JDA08					3″ double acting
		CSR03					1/2″ spring return
		DSR03					3/4″ spring return
		ESR05					1″ spring return
		GSR06					1-1/2″ spring return
		HSR07					2″ spring return
		ISR08					2-1/2″ spring return
		JSR09					3″ spring return
Valve Position			T1				Flow path A
			T2				Flow path B
			T3				Flow path C
			T4				Flow path D
			L1				Flow path E
Solenoid				N			No solenoid
				A			NEMA 4X NAMUR solenoid
Solenoid Voltage					N		No solenoid
					A		110 VAC
					B		220 VAC
					C		24 VAC
					D		24 VDC
					E		12 VDC
Positioner and Switches						00	None
						01	42AD0 exp limit switch
						02	45VD0 exp position transmitter
						03	42AD0-B ATEX limit switch
						04	42AD0-IE IECEX limit switch
						06	QV-210101 poly limit switch
						07	VPS and P1 prox switch
						08	265ER-D5 positioner
						09	285ER-D5 smart positioner

MODEL CHART - ELECTRIC ACTUATOR					
Example	**WE34**	**-HMD03**	**-T3**	**-A**	**WE34-HMD03-T3-A**
Series	WE34				316 SS 3-way 150# ANSI flange
Size and Actuator		CTD02			1/2″ NEMA 4X two-position
		DTD02			3/4″ NEMA 4X two-position
		ETD02			1″ NEMA 4X two-position
		GTD03			1-1/2″ NEMA 4X two-position
		HTD03			2″ NEMA 4X two-position
		ITD04			2-1/2″ NEMA 4X two-position
		JTD04			3″ NEMA 4X two-position
		CMD01			1/2″ NEMA 4X modulating
		DMD01			3/4″ NEMA 4X modulating
		EMD02			1″ NEMA 4X modulating
		GMD03			1-1/2″ NEMA 4X modulating
		HMD03			2″ NEMA 4X modulating
		IMD04			2-1/2″ NEMA 4X modulating
		JMD04			3″ NEMA 4X modulating
		CTI02			1/2″ exp two-position
		DTI02			3/4″ exp two-position
		ETI03			1″ exp two-position
		GTI05			1-1/2″ exp two-position
		HTI06			2″ exp two-position
		ITI06			2-1/2″ exp two-position
		JTI08			3″ exp two-position
		CMI02			1/2″ exp electric modulating
		DMI02			3/4″ exp electric modulating
		EMI03			1″ exp electric modulating
		GMI05			1-1/2″ exp electric modulating
		HMI06			2″ exp electric modulating
		IMI06			2-1/2″ exp electric modulating
		JMI08			3″ exp electric modulating
Valve Position			T1		Flow path A
			T2		Flow path B
			T3		Flow path C
			T4		Flow path D
			L1		Flow path E
Actuator Voltage				A	110 VAC
				B	220 VAC
				C	24 VAC
				D	24 VDC

REPAIR KIT	
Model	**Valve Series and Size**
VRK-50	WE34-1/2″
VRK-51	WE34-3/4″
VRK-52	WE34-1″
VRK-54	WE34-1-1/2
VRK-55	WE34-2″
VRK-56	WE34-2-1/2″
VRK-57	WE34-3″
Parts List - Included in Kit	
1 PTFE thrust washer	
1 FKM O-ring	
2 PTFE stem packing	
2 PTFE seals	
2 RTFE seats	

ACCESSORIES	
Model	**Description**
VB-01	Volume booster

"T" Port Ball

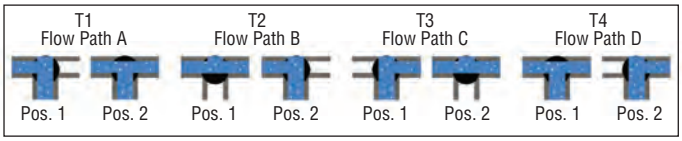

"L" Port Ball

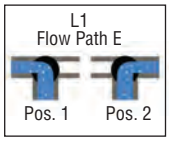

Dwyer

SERIES 3PBV

3-WAY PLASTIC AUTOMATED BALL VALVES

Electric and Pneumatic Actuators

Size	Position A	B	C	D	E
1/2″	3.85	2.45	4.55	13.7	5.11
3/4″	9.50	6.65	10.2	26.6	10.5
1″	14.4	9.80	17.2	53.2	18.6
1-1/4″	27.3	18.9	32.2	73.5	33.3
1-1/2″	33.3	23.1	42.0	119	43.4
2″	63.0	43.4	84.0	224	85.4

Cv values

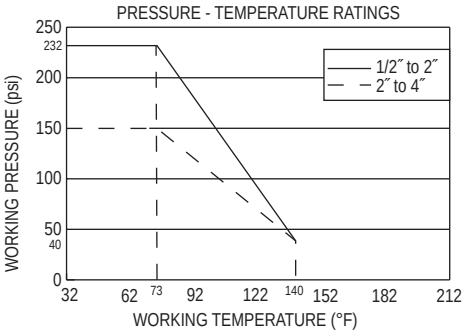

The **Series 3PBV 3-Way Plastic Automated Ball Valves** are ideal for mixing or diverting services in industrial, chemical, turf and irrigation, and pool and spa applications, as well as for use with potable water. The valve features a 3-seat design for efficient automation, reinforced TFE seats and EPDM seals for longer life, and an all PVC construction for heavyweight durability at a lightweight cost. Valves also come standard with field selectable NPT or socket process connections.

The 3PBV is an economical automated valve package with either an electric or pneumatic actuator. Electrically actuated models are weatherproof, NEMA 4 (IP56), powered by standard 115 VAC supply, and are available in either two-position or proportional control. Two-position actuators use the 115 VAC input to drive each of the valve ports open or closed, while the modulating actuator accepts a 4-20 mA input for infinite valve positioning. Actuator features include thermal overload protection to withstand stall conditions, visual position indication and a permanently lubricated gear train.

The pneumatic double acting actuator uses an air supply to drive each of the actuator ports. Spring return pneumatic actuators use the air supply to drive the valve stem one direction, and internally loaded springs return the valve to its original position. Also available is the SV3 solenoid valve to electrically switch the supply pressure between the air supply ports. Actuators are constructed of anodized aluminum and are epoxy coated for years of corrosion free service.

BENEFITS/FEATURES
- Available with a variety of electric and pneumatic actuators
- Field selectable socket or NPT connections

APPLICATIONS
- Gas or liquid flow control
- Mixing or diverting liquids and gases

HOW TO ORDER:
1. Select **Model Number** to specify pipe size and actuator.
2. Choose a **Port Configuration** to determine valve flow path.
   Example: 3PBVPSR204-L1

MODEL CHART

Size	Cv	Double Acting Pneumatic Model*	Spring Return Pneumatic Model*	Two Position Electric Model*	Modulating Electric Model*
1/2″	See Chart Below	**3PBVPDA102**	**3PBVPSR202**	**3PBVPU1102**	**3PBVPV1202**
3/4″		**3PBVPDA103**	**3PBVPSR203**	**3PBVPU1103**	**3PBVPV1203**
1″		**3PBVPDA104**	**3PBVPSR204**	**3PBVPU1104**	**3PBVPV1204**
1-1/4″		**3PBVPDA105**	**3PBVPSR205**	**3PBVPU1105**	**3PBVPV1205**
1-1/2″		**3PBVPDA206**	**3PBVPSR306**	**3PBVPU1206**	**3PBVPV1206**
2″		**3PBVPDA207**	**3PBVPSR307**	**3PBVPU1207**	**3PBVPV1207**

***Complete model includes **Port Configuration** - see "How to Order".

OPTIONS

To order add suffix:	Description	Actuator Size*
-EX	Explosion proof electric actuators	XX1-XX6

***Example:** Third digit in U12 or V12 is the size

Note: For optional electric acutator supply voltages, contact factory for model number change

SPECIFICATIONS

Service: Compatible liquids or gases.
Body: 3-way.
Line Size: 1/2″ to 2″.
End Connections: Female NPT or socket (field-selectable).
Pressure Limit: 1/2″ to 1″: 232 psi (16.0 bar) @ 73°F (23°C); 1-1/4″ to 2″: 150 psi (10.3 bar) @ 73°F (23°C) WOG; Vacuum: 29″ Hg. See chart for curve.
Wetted Materials: Body, end connectors: PVC; Ball, stem: PVC; Seat: TFE; Stem seal: EPDM.
Temperature Limit: 32 to 140°F (0 to 60°C).

ACTUATORS
Electric
Power Requirements: 120 VAC, 50/60 Hz, single phase. Optional 220 VAC, 24 VAC, 12 VDC, and 24 VDC.
Power Consumption (Locked Rotor Current): Two position: 1/2″ to 1-1/2″: .55 A, 2″: 0.75 A; Modulating: 0.75 A.
Cycle Time: (per 90°): Two position: 1/2″ to 1-1/2″: 2.5 s, 2″: 5 s; Modulating: 5 s.
Duty Cycle: Two position: 1/2″ to 1-1/2″: 75%, 2″: 25%; Modulating: 75%.
Enclosure Rating: NEMA 4. Optional NEMA 7 (Class 1, Div. II groups A, B, C, D).
Housing Material: Aluminum with thermal bonding polyester powder finish.
Temperature Limit: 0 to 150°F (-18 to 65°C).
Conduit Connection: 1/2″ female NPT.
Modulating Input: 4-20 mA.
Standard Features: Manual override and visual position indicator except modulating units.

Pneumatic "DA" and "SR" Series
Type: DA series is double acting and SR series is spring return (rack and pinion).
Normal Supply Pressure: 80 psi (5.5 bar).
Maximum Supply Pressure: 120 psig (8 bar).
Air Connections: DA/SR1 to 5: 1/8″ female NPT, all other sizes: 1/4″ female NPT.
Air Consumption (per stroke): DA1: 2.32 in^3; DA2, SR2: 9.34 in^3; SR3: 17.21 in^3.
Cycle Time (per 90°): DA1: .03 s; DA2: .04 s; SR2: .09 s; SR3: .14 s.
Housing Material: Anodized aluminum body and epoxy coated aluminum end caps.
Temperature Limit: -4 to 180°F (-20 to 82°C).
Accessory Mounting: NAMUR standard.
Standard Features: Visual position indicator.

"T" Port Ball

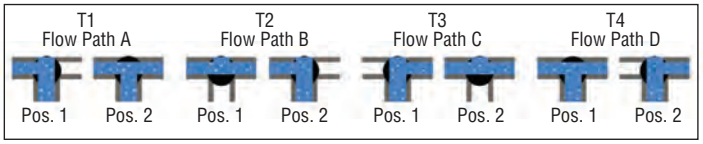

"L" Port Ball

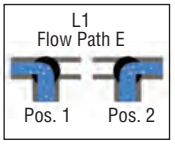

Filters and Regulators: See page 446

Dwyer

SERIES SAE

BUTTERFLY VALVE

Low Cost, S.A.E. Flange, Hydraulic Reservoir Shut Off Valve

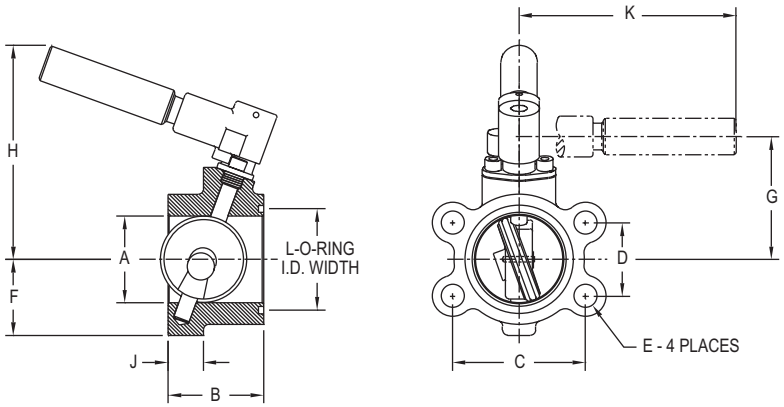

Size	A in [mm]	B in [mm]	C in [mm]	D in [mm]	E in [mm]	F in [mm]	G in [mm]	H in [mm]	J in [mm]	K in [mm]	L in [mm]	I.D. X W.D.
2″	2 [50.80]	2 [50.80]	3-1/16 [77.79]	1-11/16 [42.86]	1/2 [12.70]	1-3/4 [44.45]	2-13/16 [71.44]	5-1/8 [130.18]	13/16 [20.64]	5 [127.00]	2-1/4 [57.15]	1/8 [3.18]
2-1/2″	2-1/2 [63.50]	2 [50.80]	3-1/2 [88.90]	2 [50.80]	1/2 [12.70]	2-1/16 [52.39]	3-1/8 [79.38]	5-1/8 [130.18]	13/16 [20.64]	5 [127.00]	2-3/4 [69.85]	1/8 [3.18]
3″	3 [76.20]	2-1/2 [63.50]	4-3/16 [106.36]	2-7/16 [61.91]	5/8 [15.88]	2-5/16 [58.74]	3-3/8 [85.73]	5-1/8 [130.18]	1-1/16 [26.99]	5 [127.00]	3-3/8 [85.73]	1/8 [3.18]
4″	4 [101.60]	3-1/4 [82.55]	5-1/8 [130.18]	3-1/16 [77.79]	5/8 [15.88]	2-3/4 [69.85]	4 [101.60]	5-5/8 [142.88]	1-1/4 [31.75]	5 [127.00]	4-3/8 [111.13]	1/8 [3.18]
5″	5 [127.00]	4 [101.60]	6 [152.40]	3-5/8 [92.08]	5/8 [15.88]	3-5/16 [84.14]	4-3/8 [111.13]	6 [152.40]	1-1/2 [38.10]	5 [127.00]	5-3/8 [136.53]	1/8 [3.18]

The **Series SAE Butterfly Valve** is an ideal low cost hydraulic reservoir shut off valve. These valves are designed to meet the demanding needs of the fluid power industry. Unique features include an O-ring flange face seal complying with S.A.E. J518 dimensional requirements. This design provides for bubble tight reservoir shut off up to 25 psi (1.72 bar) and a max temperature of 180°F (82.2°C). The compact envelope dimension reduces space requirements. Unit allows for adjustment by incorporating an open/close detent position lock which can be infinitely positioned to achieve a desired flow rate. The unique design resists the vibrations associated with hydraulic pumps and pumping systems. Optional fluoroelastomer seals and locking handle are available.

SPECIFICATIONS

Service: Compatible liquids and gases.
Line Size: 2″ to 5″.
Body Style: 2-way, lug butterfly.
End Connections: O-ring flange face seal (S.A.E. J518).
Pressure Limit: Shut-off: 25 psi (1.72 bar) bubble tight; Body shell: 500 psi (34.5 bar).
Wetted Materials: Body and disc/vane: Cast iron; O-rings: Buna-N or fluoroelastomer; Stem: Steel.
Temperature Limits: Buna-N: 180°F (82°C); Fluoroelastomer: 300°F (149°C).

BENEFITS/FEATURES

- Flange face complies with S.A.E. J518 dimensional requirements
- Bubble tight shut-off
- Locking handles are available

APPLICATIONS

- Hydraulic reservoir isolation on injection molding or earth moving equipment
- Used to isolate the hydraulic reservoir during maintenance

MODEL CHART

Model	Flange Size
SAE-20	2″
SAE-25	2-1/2″
SAE-30	3″
SAE-40	4″
SAE-50	5″

OPTIONS

To order add suffix:	Description
-LHR	Locking handle
-VIT	Fluoroelastomer O-ring seals
Example: SAE-30-LHR	

Dwyer

SERIES WE20

BUTTERFLY VALVES

Lug or Wafer, EPDM or PTFE, Electric or Pneumatic Actuators

WE20-CHD00-LE

WE20-EDA06-LE

WE20-ETD04-LE-A

WE20-CDA04-WP-AA07

WE20-CDA04-WP-NN08

The **Series WE20 Butterfly Valves** are offered in lug or wafer body styles and is equipped with a PTFE or EPDM liner. The most critical aspect of the Series WE20 Butterfly Valves is the cartridge seat design, which alleviates installation problems associated with common "dove tail design" seats. Valve torques are lower and more consistent as the seat dynamics are not dependent on being coupled between two flanges. Precision machining of the disc and body allow the cartridge design to maintain a tighter disc to seat tolerance, providing a perfect low torque seal each and every time the valve is cycled. The seat to disc seal is independent of flange support and capable of full rated dead end service.

Actuators are directly mounted creating a compact assembly for tight spaces. Limit switches are able to be mounted directly to the valves allowing for remote position indication.

The Series WE20 can be configured with either an electric or pneumatic actuator. Electric actuators are available in weatherproof or explosion-proof, a variety of supply voltages and two-position or modulating control. Two-position actuators use the supply voltage to drive the valve open or closed, while the modulating actuator accepts a 4-20 mA input for valve positioning. Actuators feature thermal overload protection and permanently lubricated gear train. The pneumatic double acting actuator uses an air supply to drive the valve open and closed. The actuator has two supply ports, with one driving the valve open and the other driving the valve closed. Spring return pneumatic actuators use the air supply to open the valve, and internally loaded springs return the valve to the closed position.

The pneumatic double acting actuator uses an air supply to drive the valve open and closed. The actuator has two supply ports with one driving the valve open and the other driving the valve closed. Spring return pneumatic actuators use the air supply to open the valve and internally loaded springs return the valve to the closed position. Also available is the SV3 solenoid valve to electrically switch the air supply pressure between the air supply ports for opening and closing the valve. Actuators are constructed of anodized and epoxy coated aluminum for years of corrosion free service.

BENEFITS/FEATURES

- Machined flats attach disc/stem - no pins
- Phenolic backed cartridge seat design for extended service and ease of replacement
- Extended neck for insulation - no fabricated extensions required
- Capable of being configured to fit any application
- Limit switches can be mounted to manual valves for remote monitoring
- Available with a variety of electric and pneumatic actuators

APPLICATIONS

- Gas or liquid flow control

SPECIFICATIONS

VALVE

Service: Compatible liquids, gases, and steam.
Body: 2-way, wafer or lug butterfly.
Line Sizes: 2 to 12″.
End Connections: Lug and wafer pattern designed for flanges that are ANSI Class 125 (B16.1) and ANSI Class 150 (B16.5) dimension.
Pressure Limits: 225 psi (15.5 bar).
Wetted Materials: Body material: Ductile iron; Disc: 316 SS; Seat: EPDM or PTFE; O-ring: EPDM; Stem: 410 SS.
Temperature Limits: Disc: EPDM: -50 to 250°F (-46 to 121°C); PTFE: 0 to 300°F (-18 to 149°C).
Bearings: Nylatron.
Operator: 2 to 6″ 10-position locking hand lever; 8 to 12″: manual gear.

ACTUATORS

Pneumatic "DA" and "SR" Series

Type: DA series is double acting and SR series is spring return (rack and pinion).
Normal Supply Pressure: DA: 40 to 115 psi (2.7 to 7.9 bar); SR: 70 to 115 psi (4.8 to 7.9 bar).
Maximum Supply Pressure: 120 psi (8.6 bar).
Air Connections: DA03 thru DA11: 1/4″ FNPT; SR03 thru SR11: 1/4″ FNPT.
Housing Material: Anodized aluminum body and epoxy coated aluminum end caps.
Temperature Limits: -40 to 176°F (-40 to 80°C).
Accessory Mounting: NAMUR standard.

Electric "TD" and "MD" Series

Power Requirements: 110 VAC, 220 VAC or 24 VAC.
Power Consumption: See instruction manual.
Cycle Time (per 90°): TD01 and MD01: 4 s; TD02 and MD02: 20 s; TD03 and MD03: 30 s; TD04 and MD04: 30 s; TD05 and MD05: 30 s; TD06 and MD06: 45 s; TD07 and MD07: 30 s.
Duty Rating: 85%.
Enclosure Rating: NEMA 4X (IP67).
Housing Material: Powder coated aluminum.
Temperature Limits: -22 to 140°F (-30 to 60°C).
Electrical Connection: 1/2″ female NPT.
Modulating Input: 4-20 mA.
Standard Features: Manual override, position indicator, and TD models come with two limit switches.

Electric "TH and MH Series

Power Requirements: 110 VAC, 220 VAC, 24 VAC or 24 VDC.
Power Consumption: See instruction manual.
Cycle Time (per 90°): See instruction manual.
Duty Rating: See instruction manual.
Enclosure Rating: NEMA 7, designed to meet hazardous locations: Class I, Group C and D; Class II, Group E, F and G; Division I and II.
Housing Material: Powder coated aluminum.
Temperature Limits: -22 to 140°F (-30 to 60°C).
Electrical Connection: 1/2″ female NPT.
Modulating Input: 4-20 mA.
Standard Features: Position indicator and two limit switches.

BUTTERFLY VALVES

Lug or Wafer, EPDM or PTFE, Electric or Pneumatic Actuators

MODEL CHART

Size	Cv (gal/min)	Popular Hand Operated Model	Popular Double Acting Pneumatic Model	Popular Spring Return Pneumatic Model	NEMA 4X Two- Position Electric (110 VAC) Model	NEMA 4X Modulating Electric (110 VAC) Model
2″	135	**WE20-AHD00-WE**	**WE20-ADA03-WE**	**WE20-ASR04-WE**	**WE20-ATD02-WE-A**	**WE20-AMD02-WE-A**
2-1/2″	220	**WE20-BHD00-WE**	**WE20-BDA03-WE**	**WE20-BSR04-WE**	**WE20-BTD02-WE-A**	**WE20-BMD02-WE-A**
3″	302	**WE20-CHD00-WE**	**WE20-CDA04-WE**	**WE20-CSR06-WE**	**WE20-CTD02-WE-A**	**WE20-CMD02-WE-A**
4″	600	**WE20-DHD00-WE**	**WE20-DDA05-WE**	**WE20-DSR07-WE**	**WE20-DTD03-WE-A**	**WE20-DMD03-WE-A**
5″	1022	**WE20-EHD00-WE**	**WE20-EDA06-WE**	**WE20-ESR08-WE**	**WE20-ETD04-WE-A**	**WE20-EMD04-WE-A**
6″	1579	**WE20-FHD00-WE**	**WE20-FDA07-WE**	**WE20-FSR09-WE**	**WE20-FTD04-WE-A**	**WE20-FMD04-WE-A**
8″	3136	**WE20-GHD00-WE**	**WE20-GDA08-WE**	**WE20-GSR10-WE**	**WE20-GTD05-WE-A**	**WE20-GMD05-WE-A**
10″	5340	**WE20-HHD00-WE**	**WE20-HDA09-WE**	**WE20-HSR11-WE**	**WE20-HTD06-WE-A**	**WE20-HMD06-WE-A**
12″	8250	**WE20-IHD00-WE**	**WE20-IDA11-WE**	**WE20-ISR11-WE**	**WE20-ITD07-WE-A**	**WE20-IMD07-WE-A**

MODEL CHART - HAND OPERATED AND PNEUMATIC ACTUATOR

Example	WE20	-BSR04	-WE	-A	A	00		WE20-BSR04-WE-AA00
Series	WE20							Butterfly valve
Size and Actuator		AHD00						2″ hand operated
		BHD00						2-1/2″ hand operated
		CHD00						3″ hand operated
		DHD00						4″ hand operated
		EHD00						5″ hand operated
		FHD00						6″ hand operated
		GHD00						8″ hand operated
		HHD00						10″ hand operated
		IHD00						12″ hand operated
		ADA03						2″ double acting
		BDA03						2-1/2″ double acting
		CDA04						3″ double acting
		DDA05						4″ double acting
		EDA06						5″ double acting
		FDA07						6″ double acting
		GDA08						8″ double acting
		HDA09						10″ double acting
		IDA11						12″ double acting
		ASR04						2″ spring return
		BSR04						2-1/2″ spring return
		CSR06						3″ spring return
		DSR07						4″ spring return
		ESR08						5″ spring return
		FSR09						6″ spring return
		GSR10						8″ spring return
		HSR11						10″ spring return
		ISR11						12″ spring return
Body Type /Liner			WE					Wafer-EPDM
			WP					Wafer-PTFE
			LE					Lug-EPDM
			LP					Lug-PTFE
Solenoid				N				No solenoid
				A				NEMA 4X NAMUR solenoid
Solenoid Voltage					N			No solenoid
					A			120 VAC
					B			220 VAC
					C			24 VAC
					D			24 VDC
					E			12 VDC
Positioner and Switches						00		None
						01		42AD0 exp limit switch
						02		45VD0 exp position transmitter
						03		42AD0-B ATEX limit switch
						04		42AD0-IE IECEX limit switch
						06		QV-210101 poly limit switch
						07		VPS and P1 prox switch
						08		265ER-D5 positioner
						09		285ER-D5 smart positioner
Options							NO	Fail open spring return actuator

MODEL CHART - ELECTRIC ACTUATOR

Example	WE20	-DMH05	-WE	-A	WE20-DMH05-WE-A
Series	WE20				Butterfly valve
Size and Actuator		ATD02			2″ NEMA 4X two-position
		BTD02			2-1/2″ NEMA 4X two-position
		CTD02			3″ NEMA 4X two-position
		DTD03			4″ NEMA 4X two-position
		ETD04			5″ NEMA 4X two-position
		FTD04			6″ NEMA 4X two-position
		GTD05			8″ NEMA 4X two-position
		HTD06			10″ NEMA 4X two-position
		ITD07			12″ NEMA 4X two-position
		AMD02			2″ NEMA 4X modulating
		BMD02			2-1/2″ NEMA 4X modulating
		CMD02			3″ NEMA 4X modulating
		DMD03			4″ NEMA 4X modulating
		EMD04			5″ NEMA 4X modulating
		FMD04			6″ NEMA 4X modulating
		GMD05			8″ NEMA 4X modulating
		HMD06			10″ NEMA 4X modulating
		IMD07			12″ NEMA 4X modulating
		ATH03			2″ exp two-position
		BTH03			2-1/2″ exp two-position
		CTH05			3″ exp two-position
		DTH05			4″ exp two-position
		ETH06			5″ exp two-position
		FTH08			6″ exp two-position
		GTH09			8″ exp two-position
		HTH10			10″ exp two-position
		ITH11			12″ exp two-position
		AMH03			2″ exp electric modulating
		BMH03			2-1/2″ exp electric modulating
		CMH05			3″ exp electric modulating
		DMH05			4″ exp electric modulating
		EMH06			5″ exp electric modulating
		FMH08			6″ exp electric modulating
		GMH09			8″ exp electric modulating
		HMH10			10″ exp electric modulating
		IMH11			12″ exp electric modulating
Material/ Liner			WE		Wafer-EPDM
			WP		Wafer-PTFE
			LE		Lug-EPDM
			LP		Lug-PTFE
Actuator Voltage				A	110 VAC
				B	220 VAC
				C	24 VAC
				D	24 VDC

ACCESSORIES

Model	Description
VB-01	Volume booster

Dwyer

SERIES ACT

PNEUMATIC AND ELECTRIC ACTUATORS

Actuators for Valve and Damper Automation

ACT-SR03

ACT-TD01-110VAC

ACT-MI02-110VAC

The W.E. Anderson **Series ACT Actuators** are available in either pneumatic or electric models. The wide range of torques and voltages means there is an actuator for almost any application. The standard ISO 5211 mounting configuration makes installation to any valve or damper quick and simple.

W.E. Anderson pneumatic ACT models are a compact rack-and-pinion design with a symmetrical structure that ensures fast and steady action, high precision and high output power. The corrosion resistant anodized aluminum body is designed to withstand the harsh and abusive industrial environments and provide reliable service. We offer double acting and spring return models in a variety of sizes to fit any application.

W.E. Anderson electric ACT models are available in two-position or modulating configurations and NEMA 4X or NEMA 7 rated enclosures. All electric actuators utilize a high grade powder coated aluminum enclosure with visual indicators. The two-position models come standard with two auxiliary switches, and modulating models offer an output for position monitoring. Certain models are equipped with manual overrides allowing the operator to cycle the valve manually for installation or maintenance checks.

BENEFITS/FEATURES

- ISO 5211 Mounting configuration for easy installation
- Pneumatic actuators offer corrosion resistance anodized finish
- NAMUR mounting configuration on pneumatic actuators
- Two-position electric actuators include auxiliary limit switches
- Modulating electric actuators offer an output for position monitoring

APPLICATIONS

- Designed for quarter turn valve or damper control

SPECIFICATIONS

Pneumatic "DA" and "SR" Series
Type: DA series is double-acting and SR series is spring return (rack and pinion).
Normal Supply Pressure: DA: 40 to 115 psi (2.7 to 7.9 bar); SR: 80 psi (5.5 bar).
Maximum Supply Pressure: 120 psi (8.6 bar).
Air Connections: DA01: 1/8″ female NPT; DA02 to DA14: 1/4″ female NPT; SR02 to SR14: 1/4″ female NPT.
Housing Material: Anodized aluminum body and epoxy coated aluminum end caps.
Temperature Limits: -40 to 176°F (-40 to 80°C).
Accessory Mounting: NAMUR standard.

Electric "TD" and "MD" Series
Power Requirements: 110 VAC, 220 VAC, 24 VAC or 24 VDC (MD models not available in 24 VDC).
Power Consumption: See manual.
Cycle Time (per 90°): TD01: 4 s; MD01: 10 s; TD02 and MD02: 20 s; TD03 and MD03: 30 s; TD04 and MD04: 30 s; TD05 and MD05: 30 s; TD06 and MD06: 45 s; TD07 and MD07: 45 s.
Duty Rating: 85%.
Enclosure Rating: NEMA 4X (IP67).
Housing Material: Powder coated aluminum.
Temperature Limits: -22 to 140°F (-30 to 60°C).
Electrical Connection: 1/2″ female NPT.
Modulating Input: 4-20 mA.
Standard Features: Manual override, position indicator, and TD models come with two limit switches.

Electric "TI" and "MI" Series
Power Requirements: 110 VAC, 220 VAC, 24 VAC or 24 VDC.
Power Consumption: See instruction manual.
Cycle Time (per 90°): See instruction manual.
Duty Rating: See instruction manual.
Enclosure Rating: NEMA 7.
Housing Material: Powder coated aluminum.
Temperature Limits: -40 to 140°F (-40 to 60°C).
Electrical Connection: 1/2″ female NPT.
Modulating Input: 4-20 mA.
Standard Features: Position indicator and two limit switches.

MODEL CHART

Pneumatic Model	Description	Electric Model	Description
ACT-DA01	Double acting pneumatic actuator, 98 in-lb	**ACT-TD01-110VAC**	Electric two-position, 177 in-lb, 110 VAC
ACT-DA02	Double acting pneumatic actuator, 207 in-lb	**ACT-TD02-110VAC**	Electric two-position, 442 in-lb, 110 VAC
ACT-DA03	Double acting pneumatic actuator, 365 in-lb	**ACT-TD03-110VAC**	Electric two-position, 885 in-lb, 110 VAC
ACT-DA04	Double acting pneumatic actuator, 603 in-lb	**ACT-TD04-110VAC**	Electric two-position, 1770 in-lb, 110 VAC
ACT-DA05	Double acting pneumatic actuator, 792 in-lb	**ACT-TD05-110VAC**	Electric two-position, 3540 in-lb, 110 VAC
ACT-DA06	Double acting pneumatic actuator, 1135 in-lb	**ACT-TD06-110VAC**	Electric two-position, 8850 in-lb, 110 VAC
ACT-DA07	Double acting pneumatic actuator, 1690 in-lb	**ACT-MD01-110VAC**	Electric modulating, 265 in-lb, 110 VAC
ACT-DA08	Double acting pneumatic actuator, 2993 in-lb	**ACT-MD02-110VAC**	Electric modulating, 442 in-lb, 110 VAC
ACT-DA09	Double acting pneumatic actuator, 4506 in-lb	**ACT-MD03-110VAC**	Electric modulating, 885 in-lb, 110 VAC
ACT-DA10	Double acting pneumatic actuator, 6866 in-lb	**ACT-MD04-110VAC**	Electric modulating, 1770 in-lb, 110 VAC
ACT-DA11	Double acting pneumatic actuator, 11065 in-lb	**ACT-MD05-110VAC**	Electric modulating, 3540 in-lb, 110 VAC
ACT-DA12	Double acting pneumatic actuator, 15207 in-lb	**ACT-MD06-110VAC**	Electric modulating, 8850 in-lb, 110 VAC
ACT-DA13	Double acting pneumatic actuator, 23834 in-lb	**ACT-TI01-110VAC**	EXP electric two-position, 100 in-lb, 110 VAC
ACT-DA14	Double acting pneumatic actuator, 33516 in-lb	**ACT-TI02-110VAC**	EXP electric two-position, 200 in-lb, 110 VAC
ACT-SR02	Spring return pneumatic actuator, 95 in-lb	**ACT-TI03-110VAC**	EXP electric two-position, 300 in-lb, 110 VAC
ACT-SR03	Spring return pneumatic actuator, 176 in-lb	**ACT-TI04-110VAC**	EXP electric two-position, 400 in-lb, 110 VAC
ACT-SR04	Spring return pneumatic actuator, 274 in-lb	**ACT-TI05-110VAC**	EXP electric two-position, 675 in-lb, 110 VAC
ACT-SR05	Spring return pneumatic actuator, 381 in-lb	**ACT-TI06-110VAC**	EXP electric two-position, 1000 in-lb, 110 VAC
ACT-SR06	Spring return pneumatic actuator, 536 in-lb	**ACT-TI07-110VAC**	EXP electric two-position, 1500 in-lb, 110 VAC
ACT-SR07	Spring return pneumatic actuator, 815 in-lb	**ACT-TI08-110VAC**	EXP electric two-position, 2000 in-lb, 110 VAC
ACT-SR08	Spring return pneumatic actuator, 1411 in-lb	**ACT-TI09-110VAC**	EXP electric two-position, 3840 in-lb, 110 VAC
ACT-SR09	Spring return pneumatic actuator, 2460 in-lb	**ACT-TI10-110VAC**	EXP electric two-position, 5000 in-lb, 110 VAC
ACT-SR10	Spring return pneumatic actuator, 3733 in-lb	**ACT-TI11-110VAC**	EXP electric two-position, 7020 in-lb, 110 VAC
ACT-SR11	Spring return pneumatic actuator, 6166 in-lb	**ACT-MI01-110VAC**	EXP electric modulating, 100 in-lb, 110 VAC
ACT-SR12	Spring return pneumatic actuator, 5253 in-lb	**ACT-MI02-110VAC**	EXP electric modulating, 200 in-lb, 110 VAC
ACT-SR13	Spring return pneumatic actuator, 7923 in-lb	**ACT-MI03-110VAC**	EXP electric modulating, 300 in-lb, 110 VAC
ACT-SR14	Spring return pneumatic actuator, 9546 in-lb	**ACT-MI04-110VAC**	EXP electric modulating, 400 in-lb, 110 VAC
		ACT-MI05-110VAC	EXP electric modulating, 675 in-lb, 110 VAC
		ACT-MI06-110VAC	EXP electric modulating, 1000 in-lb, 110 VAC
		ACT-MI07-110VAC	EXP electric modulating, 1500 in-lb, 110 VAC
		ACT-MI08-110VAC	EXP electric modulating, 2000 in-lb, 110 VAC
		ACT-MI09-110VAC	EXP electric modulating, 3840 in-lb, 110 VAC
		ACT-MI10-110VAC	EXP electric modulating, 5000 in-lb, 110 VAC
		ACT-MI11-110VAC	EXP electric modulating, 7020 in-lb, 110 VAC

Note: Optional voltages available for the electric actuators. Change the -110 VAC to -220 VAC, 24 VDC or 24 VAC. The ACT-MD is not available with 24 VAC.

Dwyer

SERIES ACT

PNEUMATIC AND ELECTRIC ACTUATORS

Actuators for Valve and Damper Automation

MODEL CHART - DOUBLE ACTING ACTUATOR TORQUE

Model	Double Acting Pneumatic Actuator Output Torque (in-lb)								
	Air Pressure								
	40 psi	50 psi	60 psi	70 psi	80 psi	90 psi	100 psi	110 psi	115 psi
ACT-DA01	49	61	74	86	98	110	123	135	142
ACT-DA02	104	130	155	181	207	233	259	285	300
ACT-DA03	182	228	274	319	365	411	456	502	529
ACT-DA04	302	377	453	528	603	679	754	830	875
ACT-DA05	396	495	594	693	792	891	990	1089	1148
ACT-DA06	567	709	851	993	1135	1277	1419	1561	1646
ACT-DA07	845	1056	1267	1478	1690	1901	2112	2323	2450
ACT-DA08	1497	1871	2245	2619	2993	3367	3742	4116	4340
ACT-DA09	2253	2816	3379	3942	4506	5069	5632	6195	6533
ACT-DA10	3433	4291	5149	6008	6866	7724	8582	9440	9955
ACT-DA11	5532	6916	8299	9682	11065	12448	13831	15214	16044
ACT-DA12	7603	9504	11405	13306	15207	17107	19008	20909	22050
ACT-DA13	11917	14896	17875	20855	23834	26813	29792	32772	34559
ACT-DA14	16758	20948	25137	29327	33516	37706	41896	46085	48599

ACCESSORIES

Models	Description
SN-3A	3/2 NAMUR 110 VAC solenoid
SN-5A	5/2 NAMUR 110 VAC solenoid
VB-01	Volume booster

MODEL CHART - SPRING RETURN ACTUATOR TORQUE

Model	Spring Sets	Torque List of Spring Return Pneumatic Actuator (in-lb)													
		Spring Torque		Air Pressure											
				70 psi		80 psi		90 psi		100 psi		110 psi		115 psi	
		0°	90°	0°	90°	0°	90°	0°	90°	0°	90°	0°	90°	0°	90°
ACT-SR02	10	69.9	95.5	111.4	85.8	137.3	111.7	163.2	137.6	189.1	163.5	215	189.4	230.6	204.9
ACT-SR03	10	120	176	199	143	245	189	291	235	336	280	382	326	409	353
ACT-SR04	10	180	274	348	254	424	330	499	405	575	481	650	556	695	601
ACT-SR05	10	263	381	430	312	529	411	628	510	727	609	826	708	885	767
ACT-SR06	10	385	536	608	458	750	599	891	741	1033	883	1175	1025	1260	1110
ACT-SR07	10	695	815	783	663	994	874	1206	1085	1417	1297	1628	1508	1755	1635
ACT-SR08	10	937	1411	1682	1208	2056	1583	2430	1957	2804	2331	3178	2705	3403	2930
ACT-SR09	10	1640	2460	2303	1483	2866	2046	3429	2609	3992	3173	4556	3736	4894	4074
ACT-SR10	10	2529	3733	3479	2274	4337	3133	5195	3991	6053	4849	6911	5707	7426	6222
ACT-SR11	10	4104	6166	5578	3516	6961	4899	8344	6282	9727	7665	11111	9048	11940	9878
ACT-SR12	10	5253	8258	8052	5048	9953	6948	11854	8849	13755	10750	15656	12651	16796	13791
ACT-SR13	10	7923	14103	12932	6752	15911	9731	18890	12710	21869	15690	24849	18669	26636	20456
ACT-SR14	10	9546	18350	19781	10977	23970	15167	28160	19357	32349	23546	36539	27736	39053	30249

SERIES ARK

PNEUMATIC ACTUATOR REPAIR KIT

Springs, Gaskets, and O-rings for Series ACT-DA/SR

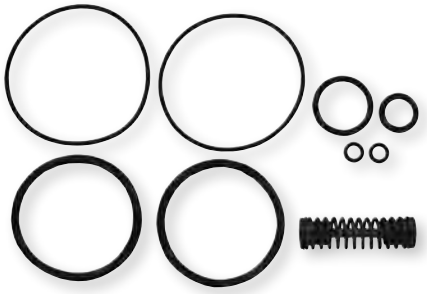

ARK-14

The **Series ARK Pneumatic Actuator Repair Kit** includes a complete set of O-rings for the Series ACT-DA and ACT-SR pneumatic actuators.

SPECIFICATIONS

Compliance: Meets the technical requirements of EU Directive 2011/65/EU (RoHS II).

BENEFITS/FEATURES

- Kit includes springs, gaskets and O-rings for ACT-DA/SR

APPLICATIONS

- Repair kit for ACT-DA or ACT-SR actuators

MODEL CHART

Model	Dwyer Actuator (Model)	Model	Dwyer Actuator (Model)
ARK-00	ACT-DA01	ARK-14	ACT-SR01
ARK-01	ACT-DA02	ARK-15	ACT-SR02
ARK-02	ACT-DA03	ARK-16	ACT-SR03
ARK-03	ACT-DA04	ARK-17	ACT-SR04
ARK-04	ACT-DA05	ARK-18	ACT-SR05
ARK-05	ACT-DA06	ARK-19	ACT-SR06
ARK-06	ACT-DA07	ARK-20	ACT-SR07
ARK-07	ACT-DA08	ARK-21	ACT-SR08
ARK-08	ACT-DA09	ARK-22	ACT-SR09
ARK-09	ACT-DA10	ARK-23	ACT-SR10
ARK-10	ACT-DA11	ARK-24	ACT-SR11
		ARK-25	ACT-SR12

ACTUATOR REPAIR KIT FOR:

Series ACT-SR/DA

PARTS LIST - INCLUDED IN KIT

(2) FVMQ O-rings for end caps
(2) FVMQ O-rings for piston
(2) FVMQ O-rings for stem
(2) FVMQ O-rings for adjusting bolt
(10) Stainless steel springs (ACT-SR kits only)

Dwyer

SERIES 38R

SELF-ACTING TEMPERATURE CONTROL VALVE

Requires No External Power

The **Series 38R Self-Acting Temperature Control Valve** requires no external power sources and is ideal for regulating the temperature of tanks, process streams and various types of industrial equipment. The actuators are made with a rugged die-cast aluminum housing with a fully enclosed bellow assembly and internal over-range protection. Valves are offered in 1/2″ through 6″ connection sizes and 1/8″ through 6″ port sizes. The valve bodies are available in single-seated direct or reverse-acting, double-seated direct or reverse-acting, and 3-way designs with four choices of body material: bronze, cast-iron, cast-steel, and 316 stainless steel. Actuators are available with or without indicating dials or in Fail-Safe. Non-indicating actuators feature a lower profile and should be implemented where space constraints may be an issue while the indicating actuator allows the operator to verify the process temperature and aid in temperature adjustment. Fail-Safe actuators are designed to cause the valve to fail in the safe control position (open in cooling application, closed in a heating application) should some accidental damage occur to the terminal system, resulting in loss of pressure charge. Also available with the Series 38R are a wide range of capillaries, bulbs, and thermowells.

Please request a copy of our Valve Catalog, CT-VC, or visit our website at www.dwyer-inst.com to see full model information and ordering details for the Series 38R.

BENEFITS/FEATURES

- Self-operated design
- Internal over range protection
- Heavy duty die cast aluminum actuator

APPLICATIONS

- Temperature control without external power or control inputs

SPECIFICATIONS
VALVE BODY
Service: Compatible liquids, gases, and steam.
Line Size: 1/2″ to 2″.
Body Style: 2-way or 3-way.
End Connections: 1/2″ to 2″ female NPT.
Pressure Limit: 250 psi (17.2 bar).
Wetted Materials: Body material: Bronze or 316 SS; Trim: 316 SS; Packing: PTFE.
Temperature Limits: 410°F (210°C) @ 250 psi (17.24 bar).
ACTUATOR
Power Requirements: Fully self-contained, no external power required.
Indicator: 3-1/2″ dial thermometer, SS case, swivel and angle adjustable (available for indicating actuator only).
Housing: Die cast aluminum, epoxy powder coated blue finish.
Set Point Scale: Integral to housing.
Bellows: High-pressure brass, corrosion resistant, tinplated finish.
Adjustment Screws: Brass.
Range Adjustment Spring: Cadmium plated.
Overrange Protection: 100°F over upper range limit for temporary situations.
Note: See website for additional options.

USA: California Proposition 65
WARNING: This product can expose you to chemicals including Lead, which is known to the State of California to cause cancer and birth defects or other reproductive harm. For more information go to www.P65Warnings.ca.gov.

SELF-ACTING TEMPERATURE CONTROL VALVE

Requires No External Power

MODEL CHART								
Example	**38R**	**-D00VA32**	**-1**	**01**	**36**	**2**	**-R09**	**38R-D00VA32-101362-R09**
Series	38R							Self-acting temperature control valve
Valve		D00VA32						1/2″ NPT single seat two-way bronze valve, direct acting
		D01VA32						3/4″ NPT single seat two-way bronze valve, direct acting
		D02VA32						1″ NPT single seat two-way bronze valve, direct acting
		D03VA32						1-1/4″ NPT single seat two-way bronze valve, direct acting
		D04VA32						1-1/2″ NPT single seat two-way bronze valve, direct acting
		D05VA32						2″ NPT single seat two-way bronze valve, direct acting
		R00VA32						1/2″ NPT single seat two-way bronze valve, reverse acting
		R01VA32						3/4″ NPT single seat two-way bronze valve, reverse acting
		R02VA32						1″ NPT single seat two-way bronze valve, reverse acting
		R03VA32						1-1/4″ NPT single seat two-way bronze valve, reverse acting
		R04VA32						1-1/2″ NPT single seat two-way bronze valve, reverse acting
		R05VA32						2″ NPT single seat two-way bronze valve, reverse acting
		D00VA42						1/2″ NPT single seat two-way 316 SS valve, direct acting
		D01VA42						3/4″ NPT single seat two-way 316 SS valve, direct acting
		D02VA42						1″ NPT single seat two-way 316 SS valve, direct acting
		D03VA42						1-1/4″ NPT single seat two-way 316 SS valve, direct acting
		D04VA42						1-1/2″ NPT single seat two-way 316 SS valve, direct acting
		D05VA42						2″ NPT single seat two-way 316 SS valve, direct acting
		R00VA42						1/2″ NPT single seat two-way 316 SS valve, reverse acting
		R01VA42						3/4″ NPT single seat two-way 316 SS valve, reverse acting
		R02VA42						1″ NPT single seat two-way 316 SS valve, reverse acting
		R03VA42						1-1/4″ NPT single seat two-way 316 SS valve, reverse acting
		R04VA42						1-1/2″ NPT single seat two-way 316 SS valve, reverse acting
		R05VA42						2″ NPT single seat two-way 316 SS valve, reverse acting
		300WA31						1/2″ NPT three-way bronze valve
		301WA31						3/4″ NPT three-way bronze valve
		302WA31						1″ NPT three-way bronze valve
		303WA31						1-1/4″ NPT three-way bronze valve
		304WA31						1-1/2″ NPT three-way bronze valve
		305WA31						2″ NPT three-way bronze valve
		300WA41						1/2″ NPT three-way 316 SS valve
		301WA41						3/4″ NPT three-way 316 SS valve
		302WA41						1″ NPT three-way 316 SS valve
		303WA41						1-1/4″ NPT three-way 316 SS valve
		304WA41						1-1/2″ NPT three-way 316 SS valve
		305WA41						2″ NPT three-way 316 SS valve
Actuator			1					Non-indicating actuator
			2					Indicating actuator
			3					Fail-safe
Bulb and Capillary				01				Brass union connection
				02				316 SS union connection
				03				Brass adjustable union connection
				04				316 SS adjustable union connection
				05				Brass plain bulb
				06				316 SS plain bulb
				07				FEP Covered brass bulb
				08				FEP Covered 316 SS bulb
				09				Brass union with stainless steel spiral armor
				10				316 SS union with stainless steel spiral armor
Capillary Length					36			Capillary length in feet. Example 36 is 36´ length
Thermowell						0		No thermowell
						1		316 SS thermowell, 1-1/4″ external connection
						2		Brass thermowell, 1-1/4″ external connection
Temperature Range							R03	30 to 115°F (-1 to 46°C)
							R04	50 to 140°F (10 to 60°C)
							R05	75 to 165°F (24 to 74°C)
							R06	105 to 195°F (41 to 91°C)
							R07	125 to 215°F (52 to 102°C)
							R09	155 to 250°F (68 to 121°C)
							R10	200 to 280°F (93 to 138°C)
							R11	225 to 315°F (107 to 157°C)
							R12	255 to 370°F (124 to 188°C)
							R13	295 to 420°F (146 to 216°C)
							R14	310 to 440°F (154 to 227°C)

USA: California Proposition 65
⚠**WARNING:** This product can expose you to chemicals including Lead, which is known to the State of California to cause cancer and birth defects or other reproductive harm. For more information go to www.P65Warnings.ca.gov.

Dwyer

HI-FLOW™ CONTROL VALVES

Globe Valves, Ideal for Steam and Water Flow Control, 1/2″ to 2-1/2″ Sizes, 2-Way or 3-Way

2-way with positioner

2-way with air-to-close actuator

2-way with air-to-open actuator

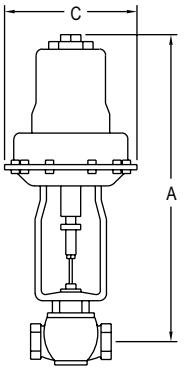

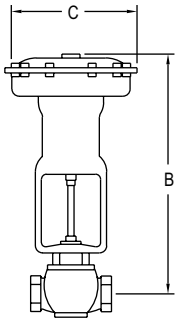

Hi-Flow™ Control Valves are single seated, top or cage guided globe valves - probably the simplest, from a construction standpoint, yet most versatile control valve in use. The Hi-Flow™ valve can fit applications with a smaller size valve since the valve has a greater flow capacity than most conventional valves of the same size.
Coupled with the high flow capacity, the Hi-Flow™ valve maintains a wide rangeability of 50:1 to insure precise control. Heavy duty Hi-Flow™ valves are ruggedly constructed of the highest quality materials, precision machined, and performance tested to assure years of trouble free service. Standard packing consists of PTFE V-rings and wiper to minimize friction without leakage at high operating pressures. Available in brass, iron, or 316 SS body, trim is 316 stainless steel with all welded plug construction to provide superior durability and corrosion resistance.

BENEFITS/FEATURES

- Wide rangeability of 50:1
- Exceptional shut-off and leak rate that meets ANSI/FCI 70-2 Class IV (0.01% of Cv in the closed position)
- Selectable fail safe condition with Air-to-Raise or Air-to-Lower actuators and Push-to-Open or Push-to-Close valve bodies
- Linear or equal percentage flow characteristics
- Low flow options of restricted trim or needle plug
- Removable and replaceable seat ring

APPLICATIONS

- Flow control, mixing, or diverting service
- Perfect for steam, water or compatible glycol solutions

HOW TO ORDER

Select model number from model chart or standard product chart and supply maximum upstream pressure, USP.

Use the chart below to aid in the selection of Hi-Flow™ Control Valve. As long as the maximum upstream pressure (USP) is less than, or equal to, the value listed, the model shown can be manufactured and calibrated to your specific requirements. Specify maximum upstream pressure, USP, when ordering.

SPECIFICATIONS

VALVE BODY
Service: Compatible liquids, gases, and steam.
Line Size: 1/2″ to 2″.
Body Style: 2-way or 3-way globe.
End Connections: 1/2″ to 2″ female NPT.
Pressure Limit: Iron and bronze body: 250 psi (17.2 bar); 316 SS body: 300 psi (20.7 bar). See model chart.
Wetted Materials: Body material: Iron, bronze, or 316 SS; Trim: 316 SS.
Packing: PTFE.
Temperature Limits: 20 to 400°F (-7 to 204.4°C).

ACTUATOR
Type: Pneumatic spring/diaphragm.
Control Signal: 3 to 15 psi (0.21 to 1.0 bar) standard. Custom ranges available.
Maximum Supply Pressure: 220, 222, and 230: 100 psi (6.89 bar). 221, 223, 231, and 233: 50 psi (3.45 bar).
Air Connection: 1/4″ female NPT.
Temperature Limit: 150°F (66°C).

Note: Positioners and current-to-pressure transducers available factory mounted. ❶❷

Caution: Use of an actuator supply gas other than air can create a hazardous environment because a small amount of gas continuously vents to atmosphere.

MODEL CHART - CONTROL VALVES - HI-FLOW™ SERIES, 2-WAY, STOCKED MODELS

Pipe Size	Cv 100%	Body Material	Air-To-Open Model	Set at USP psig [bar]	Adjustable USP Range psig [bar]
1/2″	6.45	Bronze	**2000VA32-230-QS**	125 [8.6]	96-200 [6.8-13.8]
3/4″	10.75	Bronze	**2001VA32-230-QS**	125 [8.6]	81-155 [5.6-10.7]
1″	17.42	Bronze	**2002VA32-230-QS**	125 [8.6]	123-166 [8.5-11.5]
1″	17.42	Bronze	**2002VA32-231-QS**	125 [8.6]	71-155 [4.9-10.7]
1-1/4″	25.30	Bronze	**2003VA32-230-QS**	98 [6.8]	66-98 [4.6-6.8]
1-1/4″	25.30	Bronze	**2003VA32-231-QS**	125 [8.6]	121-165 [8.3-11.4]
1-1/2″	32.10	Bronze	**2004VA32-231-QS**	125 [8.6]	104-137 [7.2-9.5]
2″	50.30	Bronze	**2005VA32-231-QS**	88 [6.1]	68-88 [4.7-6.1]
2″	50.30	Bronze	**2005VA32-233-QS**	125 [8.6]	116-145 [8.0-10.0]

MODEL CHART - 2-WAY SIMPLIFIED SELECTION GUIDE WITH STANDARD PRODUCTS

Pipe Size	Cv 100%	Body Material	Air-To-Open Model	Max USP psi [bar] 3-15 [.21-1.0]	A in [mm]	C in [mm]	Air-To-Close Model	Max USP psi [bar] 3-15 [.21-1.0]	B in [mm]	C in [mm]
1/2″	6.45	Bronze	**2000VA32-230**	250 [17.2]	19-3/4 [501.7]	7-3/4 [196.9]	**2000VA32-220**	250 [17.2]	18-7/16 [468.3]	7-3/4 [196.9]
1/2″	6.45	316 SS	**2000VA42-230**	300 [20.7]	19-3/4 [501.7]	7-3/4 [196.9]	**2000VA42-220**	300 [20.7]	18-7/16 [468.3]	7-3/4 [196.9]
3/4″	10.75	Bronze	**2001VA32-230**	250 [17.2]	19-3/4 [501.7]	7-3/4 [196.9]	**2001VA32-220**	250 [17.2]	18-7/16 [468.3]	7-3/4 [196.9]
3/4″	10.75	Bronze	**2001VA32-231**	250 [17.2]	20-3/8 [517.5]	10-5/8 [269.9]	**2001VA32-221**	250 [17.2]	19-1/8 [485.8]	10-5/8 [269.9]
3/4″	10.75	316 SS	**2001VA42-230**	285 [19.7]	19-3/4 [501.7]	7-3/4 [196.9]	**2001VA42-220**	300 [20.7]	18-7/16 [468.3]	7-3/4 [196.9]
3/4″	10.75	316 SS	**2001VA42-231**	300 [20.7]	20-3/8 [517.5]	10-5/8 [269.9]	**2001VA42-221**	300 [20.7]	19-1/8 [485.8]	10-5/8 [269.9]
1″	17.42	Bronze	**2002VA32-230**	166 [11.4]	20-3/16 [512.8]	7-3/4 [196.9]	**2002VA32-220**	192 [13.2]	18-7/8 [479.4]	7-3/4 [196.9]
1″	17.42	Bronze	**2002VA32-231**	250 [17.2]	20-13/16 [528.6]	10-5/8 [269.9]	**2002VA32-221**	250 [17.2]	19-9/16 [496.9]	10-5/8 [269.9]
1″	17.42	316 SS	**2002VA42-230**	166 [11.4]	20-3/16 [512.8]	7-3/4 [196.9]	**2002VA42-220**	192 [13.2]	18-7/8 [479.4]	7-3/4 [196.9]
1″	17.42	316 SS	**2002VA42-231**	300 [20.7]	20-13/16 [528.6]	10-5/8 [269.9]	**2002VA42-221**	300 [20.7]	19-9/16 [496.9]	10-5/8 [269.9]
1-1/4″	25.30	Bronze	**2003VA32-230**	98 [6.8]	20-5/16 [515.9]	7-3/4 [196.9]	**2003VA32-220**	115 [7.9]	19 [482.6]	7-3/4 [196.9]
1-1/4″	25.30	Bronze	**2003VA32-231**	245 [16.9]	20-15/16 [531.8]	10-5/8 [269.9]	**2003VA32-221**	250 [17.2]	19-11/16 [500.1]	10-5/8 [269.9]
1-1/4″	25.30	Bronze	**2003VA32-233**	250 [17.2]	25-13/32 [645.3]	13-3/8 [339.7]	**2003VA32-223**	250 [17.2]	23-1/8 [587.4]	13-3/8 [339.7]
1-1/4″	25.30	316 SS	**2003VA42-230**	98 [6.8]	20-5/16 [515.9]	7-3/4 [196.9]	**2003VA42-220**	115 [7.9]	19 [482.6]	7-3/4 [196.9]
1-1/4″	25.30	316 SS	**2003VA42-231**	245 [17.0]	20-15/16 [531.8]	10-5/8 [269.9]	**2003VA42-221**	300 [20.7]	19-11/16 [500.1]	10-5/8 [269.9]
1-1/4″	25.30	316 SS	**2003VA42-233**	300 [20.7]	25-13/32 [645.3]	13-3/8 [339.7]	**2003VA42-223**	300 [20.7]	23-1/8 [587.4]	13-3/8 [339.7]
1-1/2″	32.10	Bronze	**2004VA32-230**	65 [4.5]	20-11/16 [525.5]	7-3/4 [196.9]	**2004VA32-220**	80 [5.5]	19-3/8 [492.1]	7-3/4 [196.9]
1-1/2″	32.10	Bronze	**2004VA32-231**	168 [11.6]	21-5/16 [541.3]	10-5/8 [269.9]	**2004VA32-221**	235 [16.2]	20-1/16 [509.6]	10-5/8 [269.9]
1-1/2″	32.10	Bronze	**2004VA32-233**	250 [17.2]	25-25/32 [654.8]	13-3/8 [339.7]	**2004VA32-223**	250 [17.2]	23-1/2 [596.9]	13-3/8 [339.7]
1-1/2″	32.10	316 SS	**2004VA42-230**	65 [4.5]	20-11/16 [525.5]	7-3/4 [196.9]	**2004VA42-220**	80 [5.5]	19-3/8 [492.1]	7-3/4 [196.9]
1-1/2″	32.10	316 SS	**2004VA42-231**	168 [11.6]	21-5/16 [541.3]	10-5/8 [269.9]	**2004VA42-221**	235 [16.2]	201/16 [509.6]	10-5/8 [269.9]
1-1/2″	32.10	316 SS	**2004VA42-233**	300 [20.7]	25-25/32 [654.8]	13-3/8 [339.7]	**2004VA42-223**	300 [20.7]	23-1/2 [596.9]	13-3/8 [339.7]
2″	50.30	Bronze	**2005VA32-230**	31 [2.1]	20-15/16 [531.8]	7-3/4 [196.9]	**2005VA32-220**	44 [3.0]	19-5/8 [498.5]	7-3/4 [196.9]
2″	50.30	Bronze	**2005VA32-231**	88 [6.1]	21-9/16 [547.7]	10-5/8 [269.9]	**2005VA32-221**	140 [9.7]	20-5/16 [515.9]	10-5/8 [269.9]
2″	50.30	Bronze	**2005VA32-233**	175 [12.1]	26-1/32 [661.2]	13-3/8 [339.7]	**2005VA32-223**	250 [17.2]	23-3/4 [603.3]	13-3/8 [339.7]
2″	50.30	316 SS	**2005VA42-230**	31 [2.1]	20-15/16 [531.8]	7-3/4 [196.9]	**2005VA42-220**	44 [3.0]	19-5/8 [498.5]	7-3/4 [196.9]
2″	50.30	316 SS	**2005VA42-231**	88 [6.1]	21-9/16 [547.7]	10-5/8 [269.9]	**2005VA42-221**	140 [9.7]	20-5/16 [515.9]	10-5/8 [269.9]
2″	50.30	316 SS	**2005VA42-233**	175 [12.1]	26-1/32 [661.2]	13-3/8 [339.7]	**2005VA42-223**	272 [18.8]	23-3/4 [606.3]	13-3/8 [339.7]

USA: California Proposition 65
⚠**WARNING:** This product can expose you to chemicals including Lead, which is known to the State of California to cause cancer and birth defects or other reproductive harm. For more information go to www.P65Warnings.ca.gov.

❶**Transducers: See page 440 (Series 2800)**
See page 441 (Series 2900)
❷**Positioners: See page 442 (Series 165)**
Filters and Regulators: See page 446

HI-FLOW™ CONTROL VALVES

3-Way Standard Products for Mixing or Diverting

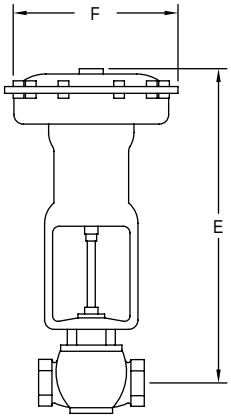

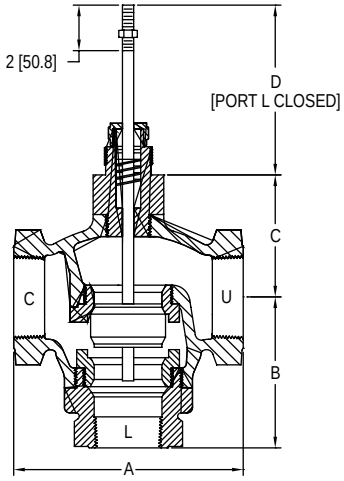

DIMENSIONS			
Pipe Size	**B in [mm]**	**C in [mm]**	**D in [mm]**
1/2″	2-9/16 [65.1]	2-3/16 [55.6]	4-1/8 [104.8]
3/4″	2-9/16 [65.1]	2-3/16 [55.6]	4-1/8 [104.8]
1″	3 [76.2]	2-7/16 [61.9]	4 [101.6]
1-1/4″	3-3/16 [81.0]	2-1/2 [63.5]	3-3/4 [95.3]
1-1/2″	3-3/4 [95.3]	2-3/4 [69.9]	3-11/16 [93.7]
2″	3-15/16 [100.0]	3-3/16 [81.0]	3-11/16 [93.7]

Use the standard models chart to aid in the selection of the most economical Hi-Flow™ 3-Way Control Valve for your application. Standard models include: LIN-E-AIRE® Air-To-Lower Actuator (port L opens on loss of air)

Mixing Service
FLOW IN - ports U&L; FLOW OUT - port C
Specify maximum upstream pressures [USP's]: USP_U and USP_L
To determine shutoff pressure: (USP_U - USP_C) + (USP_L - USP_C)

Diverting Service
FLOW IN - port C; FLOW OUT - ports U&L
Specify maximum upstream pressures [USP's]: USP_C; based on standard 3-15 psi [.21-1.0 bar] pneumatic control signal
To determine shutoff pressure: USP_U + USP_C

MODEL CHART - HI-FLOW™ CONTROL VALVES, 3-WAY SIMPLIFIED SELECTION GUIDE WITH STANDARD PRODUCTS						
Pipe Size	**Cv 100%**	**Body Material**	**Model**	**USP [S] psi [bar]**	**E in [mm]**	**F in [mm]**
1/2″	6.45	Bronze	**3000WA32-220**	250 [17.2]	18-1/16 [458.8]	7-3/4 [196.9]
1/2″	6.45	316 SS	**3000WA42-220**	300 [20.7]	18-1/16 [458.8]	7-3/4 [196.9]
3/4″	10.75	Bronze	**3001WA32-220**	250 [17.2]	18-1/16 [458.8]	7-3/4 [196.9]
1″	17.42	Bronze	**3002WA32-220**	200 [13.8]	18-5/16 [465.1]	7-3/4 [196.9]
1″	17.42	Bronze	**3002WA32-221**	250 [17.2]	19 [482.6]	10-5/8 [269.9]
1″	17.42	316 SS	**3002WA42-220**	200 [13.8]	18-5/16 [465.1]	7-3/4 [196.9]
1″	17.42	316 SS	**3002WA42-221**	300 [20.7]	19 [482.6]	10-5/8 [269.9]
1-1/4″	25.30	Bronze	**3003WA32-220**	120 [8.4]	18-3/8 [466.7]	7-3/4 [196.9]
1-1/4″	25.30	Bronze	**3003WA32-221**	250 [17.2]	19-1/16 [484.2]	10-5/8 [269.9]
1-1/2″	32.10	Bronze	**3004WA32-220**	80 [5.6]	18-5/8 [473.1]	7-3/4 [196.9]
1-1/2″	32.10	Bronze	**3004WA32-221**	200 [13.8]	19-5/16 [490.5]	10-5/8 [269.9]
1-1/2″	32.10	Bronze	**3004WA32-223**	250 [17.2]	21-3/8 [542.9]	13-3/8 [339.7]
1-1/2″	32.10	316 SS	**3004WA42-220**	80 [5.5]	18-5/8 [473.1]	7-3/4 [196.9]
1-1/2″	32.10	316 SS	**3004WA42-221**	200 [13.8]	19-5/16 [490.5]	10-5/8 [269.9]
1-1/2″	32.10	316 SS	**3004WA42-223**	300 [20.7]	21-3/8 [542.9]	13-3/8 [339.7]
2″	50.30	Bronze	**3005WA32-220**	45 [3.1]	19-1/16 [484.2]	7-3/4 [196.9]
2″	50.30	Bronze	**3005WA32-221**	100 [6.9]	19-3/4 [501.7]	10-5/8 [269.9]
2″	50.30	Bronze	**3005WA32-223**	175 [12.1]	21-13/16 [554.0]	13-3/8 [339.7]
2″	50.30	316 SS	**3005WA42-220**	45 [3.1]	19-1/16 [484.2]	7-3/4 [196.9]
2″	50.30	316 SS	**3005WA42-221**	100 [6.9]	19-3/4 [501.7]	10-5/8 [269.9]
2″	50.30	316 SS	**3005WA42-223**	175 [12.1]	21-12/16 [554.0]	13-3/8 [339.7]

Caution: Use of an actuator supply gas other than air can create a hazardous environment because a small amount of gas continuously vents to atmosphere.

USA: California Proposition 65
⚠**WARNING:** This product can expose you to chemicals including Lead, which is known to the State of California to cause cancer and birth defects or other reproductive harm. For more information go to www.P65Warnings.ca.gov.

Dwyer

SERIES SBSV-B

BRASS SOLENOID VALVE, 2-WAY GUIDED NC

Compact Design, Immune to Mounting Orientation

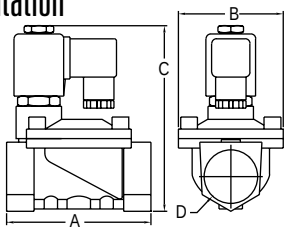

Model	A in [mm]	B in [mm]	C in [mm]	D NPT	Weight lb [kg]
SBSV-B1NX	1-5/8 [41]	1-5/32 [29]	3-9/32 [83]	1/8″	0.82 [0.37]
SBSV-B2NX	1-5/8 [41]	1-5/32 [29]	3-9/32 [83]	1/4″	0.79 [0.36]
SBSV-B3NX	2-5/8 [66]	1-57/64 [48]	4-7/16 [112]	3/8″	1.54 [0.7]
SBSV-B4NX	2-5/8 [66]	1-57/64 [48]	4-7/16 [112]	1/2″	1.98 [0.9]
SBSV-B5NX	2-61/64 [75]	2-19/64 [58]	4-21/32 [118]	3/4″	1.98 [0.9]
SBSV-B6NX	3-25/32 [96]	2-49/64 [70]	5-11/64 [131]	1″	3.09 [1.4]
SBSV-B7NX	5-11/64 [131]	3-25/32 [96]	3-3/4 [146]	1-1/4″	6.17 [2.8]
SBSV-B8NX	5-11/64 [131]	3-25/32 [96]	5-3/4 [146]	1-1/2″	5.95 [2.7]
SBSV-B9NX	6-1/2 [165]	4-47/64 [120]	6-37/64 [167]	2″	10.58 [4.8]

The **Series SBSV-B Brass Solenoid Valve** is compact, general-service, two-way guide type solenoid valves for air, gas, water and other liquid applications. They are available in brass with a normally closed design and can be oriented in any position. The solenoid enclosure provides protection against dust, while also protecting against seepage of oil and non-corrosive coolants. The Series SBSV-B valves come assembled with an NBR seal, having a maximum process temperature of 176°F (80°C). The series offers a wide range of valve sizes and flow ranges, with connection sizes from 1/8″ to 2″ NPT and orifices from 3 mm to 50 mm.

BENEFITS/FEATURES
- Can be oriented in any position
- Compact design
- Field replaceable coils

APPLICATIONS
- Wide variety of applications, suitable air, gas, water and other liquids

SPECIFICATIONS

Service: Compatible gases and liquids.
Line Size: 1/8 to 2″ NPT.
End Connections: Female NPT.
Operating Pressure: 1/8 to 1/4″: 0 psi (0 bar) to 188.5 psi (13 bar); 3/8 to 2″: 7.3 psi (0.5 bar) to 188.5 psi (13 bar).
Pressure Limit: 246.6 psi (17 bar).
Wetted Material: Body: Brass; Spring: 304 SS; Seal: NBR.
Temperature Limits: Process: 176°F (80°C); Ambient: 32 to 149°F (0 to 65°C).
Power Requirements: Standard: 110 VAC; Optional: 220 VAC, 24 VDC, 24 VAC consult factory.❶
Power Consumption: See table.
Enclosure Rating: NEMA 13 (IP54).
Electrical Connection: DIN connection.
Other Materials: Nylon.
Mounting Orientation: Any position, best if solenoid vertically above valve.
Type of Operation: NC.
Weight: See table.
Compliance: CE.

MODEL CHART

Model	Connection, NPT	Orifice in [mm]	Cv Value	Voltage
SBSV-B1N1	1/8″	0.12 [3]	0.23	110 VAC
SBSV-B2N1	1/4″	0.12 [3]	0.23	110 VAC
SBSV-B3N1	3/8″	0.51 [13]	4.5	110 VAC
SBSV-B4N1	1/2″	0.51 [13]	4.5	110 VAC
SBSV-B5N1	3/4″	0.79 [20]	7.6	110 VAC
SBSV-B6N1	1″	0.98 [25]	12	110 VAC
SBSV-B7N1	1-1/4″	1.38 [35]	22	110 VAC
SBSV-B8N1	1-1/2″	1.57 [40]	30	110 VAC
SBSV-B9N1	2″	1.97 [50]	48	110 VAC

Note: Consult factory for 220 VAC, 24 VAC and 24 VDC.

Voltage	50 Hz (VA) Inrush	50 Hz (VA) Holding	60 Hz (VA) Inrush	60 Hz (VA) Holding	DC (W)
220 VAC	55	22	55	18	-
110 VAC	55	22	55	18	-
24 VAC	45	18	45	15	-
24 VDC	-	-	-	-	13

USA: California Proposition 65
⚠**WARNING:** This product can expose you to chemicals including Lead, which is known to the State of California to cause cancer and birth defects or other reproductive harm. For more information go to www.P65Warnings.ca.gov.

❶**Solenoid Coils: See page 424 (Series SRC)**

SERIES SBSV-S

STAINLESS STEEL SOLENOID VALVE, 2-WAY GUIDED NC

Compact Design, Immune to Mounting Orientation

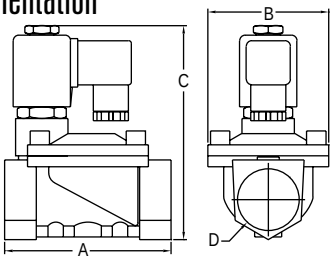

Model	A in [mm]	B in [mm]	C in [mm]	D NPT	Weight lb [kg]
SBSV-S1FX	1-5/8 [41]	1-5/32 [29]	3-9/32 [83]	1/8″	0.82 [0.37]
SBSV-S2FX	1-5/8 [41]	1-5/32 [29]	3-9/32 [83]	1/4″	0.79 [0.36]
SBSV-S3FX	2-5/8 [66]	1-57/64 [48]	4-7/16 [112]	3/8″	1.65 [0.75]
SBSV-S4FX	2-5/8 [66]	1-57/64 [48]	4-7/16 [112]	1/2″	1.54 [0.7]
SBSV-S5FX	2-61/64 [75]	2-19/64 [58]	4-21/32 [118]	3/4″	1.98 [0.9]
SBSV-S6FX	3-25/32 [96]	2-49/64 [70]	5-11/64 [131]	1″	2.87 [1.3]
SBSV-S7FX	5-11/64 [131]	3-25/32 [96]	3-3/4 [146]	1-1/4″	5.73 [2.6]
SBSV-S8FX	5-11/64 [131]	3-25/32 [96]	3-3/4 [146]	1-1/2″	5.51 [2.5]
SBSV-S9FX	6-1/2 [165]	3-47/64 [120]	6-37/64 [167]	2″	9.7 [4.4]

The **SERIES SBSV-S SS Solenoid Valve** is compact, general-service, two-way guide type solenoid valves for air, gas, water and other liquid applications. They are available in stainless steel with a normally closed design and can be oriented in any position. The solenoid enclosure provides protection against dust, while also protecting against seepage of oil and non-corrosive coolants. The Series SBSV-B valves come assembled with an NBR seal, having a maximum process temperature of 176°F (80°C). The series offers a wide range of valve sizes and flow ranges, with connection sizes from 1/8″ to 2″ NPT and orifices from 3 mm to 50 mm.

BENEFITS/FEATURES
- Can be oriented in any position
- Compact design
- Field replaceable coils

APPLICATIONS
- Wide variety of applications, suitable air, gas, water and other liquids

SPECIFICATIONS

Service: Compatible gases and liquids.
Line Size: 1/8 to 2″ NPT.
End Connections: Female NPT.
Operating Pressure: 1/8 to 1/4″: 0 psi (0 bar) to 188.5 psi (13 bar); 3/8 to 2″: 7.3 psi (0.5 bar) to 188.5 psi (13 bar).
Pressure Limit: 246.6 psi (17 bar).
Wetted Material: Body: 316 SS; Spring; 304 SS; Seal: Fluoroelastomer.
Temperature Limits: Process: 176°F (80°C); Ambient: 32 to 149°F (0 to 65°C).
Power Requirements: Standard: 110 VAC; Optional: 220 VAC, 24 VDC, 24 VAC consult factory.❶
Power Consumption: See table.
Enclosure Rating: NEMA 13 (IP54).
Electrical Connection: DIN connection.
Other Materials: Nylon.
Mounting Orientation: Any position, best if solenoid vertically above valve.
Type of Operation: NC.
Weight: See table.
Compliance: CE.

MODEL CHART

Model	Connection, NPT	Orifice in [mm]	Cv Value	Voltage
SBSV-S1F1	1/8″	0.12 [3]	0.23	110 VAC
SBSV-S2F1	1/4″	0.12 [3]	0.23	110 VAC
SBSV-S3F1	3/8″	0.51 [13]	4.5	110 VAC
SBSV-S4F1	1/2″	0.51 [13]	4.5	110 VAC
SBSV-S5F1	3/4″	0.79 [20]	7.6	110 VAC
SBSV-S6F1	1″	0.98 [25]	12	110 VAC
SBSV-S7F1	1-1/4″	1.38 [35]	22	110 VAC
SBSV-S8F1	1-1/2″	1.57 [40]	30	110 VAC
SBSV-S9F1	2″	1.97 [50]	48	110 VAC

Note: Consult factory for 220 VAC, 24 VAC and 24 VDC.

Voltage	50 Hz (VA) Inrush	50 Hz (VA) Holding	60 Hz (VA) Inrush	60 Hz (VA) Holding	DC (W)
220 VAC	55	22	55	18	-
110 VAC	55	22	55	18	-
24 VAC	45	18	45	15	-
24 VDC	-	-	-	-	13

❶**Solenoid Coils: See page 424 (Series SRC)**

Dwyer

SERIES SSV-B

BRASS SOLENOID VALVE, 2-WAY GUIDED NO

Compact Design, Immune to Mounting Orientation

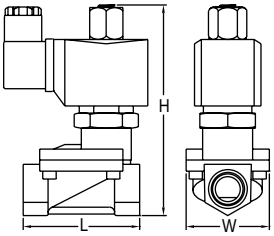

Model	L in [mm]	H in [mm]	W in [mm]	Weight lb [kg]
SSV-B1NX	1-5/8 [41]	3-15/32 [88]	1-9/64 [29]	0.88 [0.40]
SSV-B2NX	1-5/8 [41]	3-17/64 [83]	1-9/64 [29]	0.86 [0.39]
SSV-B3NX	2-19/32 [66]	4-57/64 [124]	1-57/64 [48]	1.98 [0.90]
SSV-B4NX	2-19/32 [66]	4-57/64 [124]	1-57/64 [48]	1.98 [0.90]
SSV-B5NX	2-61/64 [75]	5-1/8 [130]	2-9/32 [58]	2.42 [1.10]
SSV-B6NX	3-25/32 [96]	5-5/8 [143]	2-3/4 [70]	3.52 [1.60]
SSV-B7NX	5-5/32 [131]	6-7/32 [158]	3-25/32 [96]	6.60 [3.00]
SSV-B8NX	5-5/32 [131]	6-7/32 [158]	3-25/32 [96]	6.16 [2.80]
SSV-B9NX	6-1/2 [165]	7-3/64 [179]	4-47/64 [120]	5.00 [11.0]

The **Series SSV-B Brass Solenoid Valve** is compact, general-service, two-way guide type solenoid valves for air, gas, water, and other liquid applications. They are available in brass with a normally open design and can be oriented in any position. The solenoid enclosure provides protection against dust while also protecting against seepage of oil and non-corrosive coolants. The Series SSV-B valves come assembled with an NBR seal having a maximum process temperature of 176°F (80°C). The series offers a wide range of valve sizes and flow ranges with connection sizes from 1/8″ to 2″ NPT and orifices from 3 mm to 50 mm.

BENEFITS/FEATURES
- Can be oriented in any position
- Compact design
- Field replaceable coils

APPLICATIONS
- Wide variety of applications, suitable air, gas, water and other liquids

SPECIFICATIONS

Service: Compatible gases and liquids.
Line Size: 1/8 to 2″ NPT.
End Connections: Female NPT.
Operating Pressure: 1/8 to 1/4″: 0 psi (0 bar) to 87 psi (6 bar); 3/8 to 2″: 7.3 psi (0.5 bar) to 116 psi (8 bar).
Pressure Limit: 174 psi (12 bar).
Wetted Material: Body: Brass; Spring: 304 SS; Seal: NBR.
Temperature Limits: Process: 176°F (80°C); Ambient: 32 to 149°F (0 to 65°C).
Power Requirements: Standard: 110 VAC; Optional: 220 VAC, 24 VDC consult factory.❶
Power Consumption: See table.
Enclosure Rating: NEMA 13 (IP54).
Electrical Connection: DIN connection.
Other Materials: Nylon.
Mounting Orientation: Any position, best if solenoid vertically above valve.
Type of Operation: NO.
Weight: See table.
Compliance: CE.

MODEL CHART

Model	Connection, NPT	Orifice in [mm]	Cv Value	Voltage
SSV-B1N1	1/8″	0.12 [3]	0.25	110 VAC
SSV-B2N1	1/4″	0.12 [3]	0.25	110 VAC
SSV-B3N1	3/8″	0.51 [13]	4.5	110 VAC
SSV-B4N1	1/2″	0.51 [13]	4.5	110 VAC
SSV-B5N1	3/4″	0.79 [20]	7.6	110 VAC
SSV-B6N1	1″	0.98 [25]	12	110 VAC
SSV-B7N1	1-1/4″	1.38 [35]	22	110 VAC
SSV-B8N1	1-1/2″	1.57 [40]	30	110 VAC
SSV-B9N1	2″	1.97 [50]	48	110 VAC

Note: Consult factory for 220 VAC, 24 VAC and 24 VDC.

Voltage	50 Hz (VA) Inrush	50 Hz (VA) Holding	60 Hz (VA) Inrush	60 Hz (VA) Holding	DC (W)
220 VAC	82	33	82	28	-
110 VAC	82	33	82	28	-
24 VDC	-	-	-	-	32

USA: California Proposition 65
⚠**WARNING:** This product can expose you to chemicals including Lead, which is known to the State of California to cause cancer and birth defects or other reproductive harm. For more information go to www.P65Warnings.ca.gov.

❶**Solenoid Coils: See page 424 (Series SRC)**

SERIES SSV-S

STAINLESS STEEL SOLENOID VALVE, 2-WAY GUIDED NO

Compact Design, Immune to Mounting Orientation

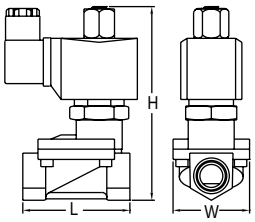

Model	L in [mm]	H in [mm]	W in [mm]	Weight lb [kg]
SSV-S1FX	1-5/8 [41]	3-15/32 [88]	1-9/64 [29]	0.88 [0.40]
SSV-S2FX	1-5/8 [41]	3-17/64 [83]	1-9/64 [29]	0.86 [0.39]
SSV-S3FX	2-19/32 [66]	4-57/64 [124]	1-57/64 [48]	2.09 [0.95]
SSV-S4FX	2-19/32 [66]	4-57/64 [124]	1-57/64 [48]	1.98 [0.90]
SSV-S5FX	2-61/64 [75]	5-1/8 [130]	2-9/32 [58]	2.42 [1.10]
SSV-S6FX	3-25/32 [96]	5-5/8 [143]	2-3/4 [70]	3.30 [1.50]
SSV-S7FX	5-5/32 [131]	6-7/32 [158]	3-25/32 [96]	6.16 [2.80]
SSV-S8FX	5-5/32 [131]	6-7/32 [158]	3-25/32 [96]	5.94 [2.70]
SSV-S9FX	6-1/2 [165]	7-3/64 [179]	4-47/64 [120]	10.1 [4.60]

The **Series SSV-S SS Solenoid Valve** is compact, general-service, two-way guide type solenoid valves for air, gas, water, and other liquid applications. They are available in stainless steel with a normally open design and can be oriented in any position. The solenoid enclosure provides protection against dust, while also protecting against seepage of oil and non-corrosive coolants. The Series SSV-S valves come assembled with a fluoroelastomer seal, having a maximum process temperature of 248°F (120°C). The series offers a wide range of valve sizes and flow ranges, with connection sizes from 1/8″ to 2″ NPT and orifices from 3 mm to 50 mm.

BENEFITS/FEATURES
- Can be oriented in any position
- Compact design
- Field replaceable coils

APPLICATIONS
- Wide variety of applications, suitable air, gas, water and other liquids

SPECIFICATIONS

Service: Compatible gases and liquids.
Line Size: 1/8 to 2″ NPT.
End Connections: Female NPT.
Operating Pressure: 1/8 to 1/4″: 0 psi (0 bar) to 87 psi (6 bar); 3/8 to 2″: 7.3 psi (0.5 bar) to 116 psi (8 bar).
Pressure Limit: 174 psi (12 bar).
Wetted Material: Body: 316 SS; Spring: 304 SS; Seal: Fluoroelastomer.
Temperature Limits: Process: 248°F (120°C); Ambient: 32 to 149°F (0 to 65°C).
Power Requirements: Standard: 110 VAC; Optional: 220 VAC; 24 VDC consult factory.❶
Power Consumption: See table.
Enclosure Rating: NEMA 13 (IP54).
Electrical Connection: DIN connection.
Other Materials: Nylon.
Mounting Orientation: Any position, best if solenoid vertically above valve.
Type of Operation: NO.
Weight: See table.
Compliance: CE.

MODEL CHART

Model	Connection, NPT	Orifice in [mm]	Cv Value	Voltage
SSV-S1F1	1/8″	0.12 [3]	0.25	110 VAC
SSV-S2F1	1/4″	0.12 [3]	0.25	110 VAC
SSV-S3F1	3/8″	0.51 [13]	4.5	110 VAC
SSV-S4F1	1/2″	0.51 [13]	4.5	110 VAC
SSV-S5F1	3/4″	0.79 [20]	7.6	110 VAC
SSV-S6F1	1″	0.98 [25]	12	110 VAC
SSV-S7F1	1-1/4″	1.38 [35]	22	110 VAC
SSV-S8F1	1-1/2″	1.57 [40]	30	110 VAC
SSV-S9F1	2″	1.97 [50]	48	110 VAC

Note: Consult factory for 220 VAC, 24 VAC and 24 VDC.

Voltage	50 Hz (VA) Inrush	50 Hz (VA) Holding	60 Hz (VA) Inrush	60 Hz (VA) Holding	DC (W)
220 VAC	82	33	82	28	-
110 VAC	82	33	82	28	-
24 VDC	-	-	-	-	32

❶**Solenoid Coils: See page 424 (Series SRC)**

Dwyer

SERIES SRC

SOLENOID REPLACEMENT COILS

For the Series SSV and SBSV Solenoid Valves

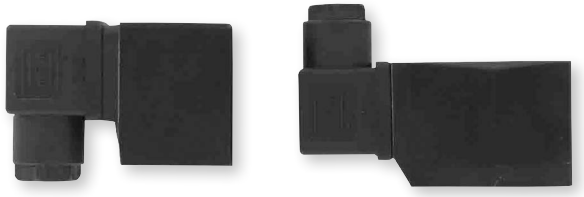

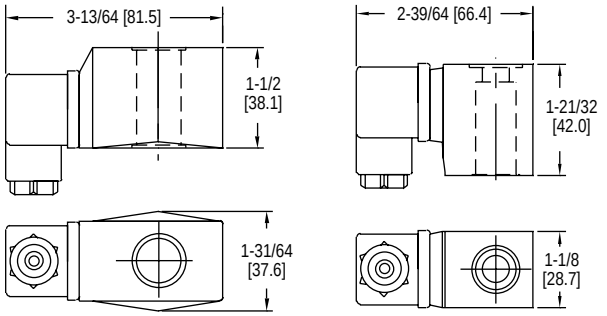

Models SRC-X180X and SRC-X280X **Models SRC-XXS0X**

The **Series SRC Solenoid Replacement Coils** electrically operate the SSV and SBSV solenoid valves. When the solenoid coil receives an electrical input signal it acts upon the valve, changing its state. These coils are field replaceable with their compatible solenoid valves and come in a wide range of voltages.

BENEFITS/FEATURES
- Field replaceable

APPLICATIONS
- Replacement coils for SSV and SBSV solenoid valves

SPECIFICATIONS

Compatible Valves: SSV or SBSV.
Power Requirements: 220 VAC, 110 VAC, 24 VAC or 24 VAC.
Electrical Connections: DIN connection.
Enclosure Rating: NEMA 13 (IP54).
Power Consumption: See table.
Agency Approvals: CE.

SSV COMPATIBLE COILS

Model	Voltage	50 Hz (VA)		60 Hz (VA)		DC
		Inrush	Holding	Inrush	Holding	(W)
SRC-D1B0P	220 VAC	82	33	82	28	-
SRC-D2B0P	110 VAC	82	33	82	28	-
SRC-D3B0P	24 VAC	72	29	72	25	-
SRC-D4B0P	24 VDC	-	-	-	-	32

Note: Consult factory for 220 VAC, 24 VAC and 24 VDC.

SBSV COMPATIBLE COILS

Model	Voltage	50 Hz (VA)		60 Hz (VA)		DC
		Inrush	Holding	Inrush	Holding	(W)
SRC-D1S0C	220 VAC	55	22	55	18	-
SRC-D2S0C	110 VAC	55	22	55	18	-
SRC-D3S0C	24 VAC	45	18	45	15	-
SRC-D4S0C	24 VDC	-	-	-	-	13

Note: Consult factory for 220 VAC, 24 VAC and 24 VDC.

SERIES SN

NAMUR MOUNT SOLENOID VALVE

Manual Override, 100% Duty Rating

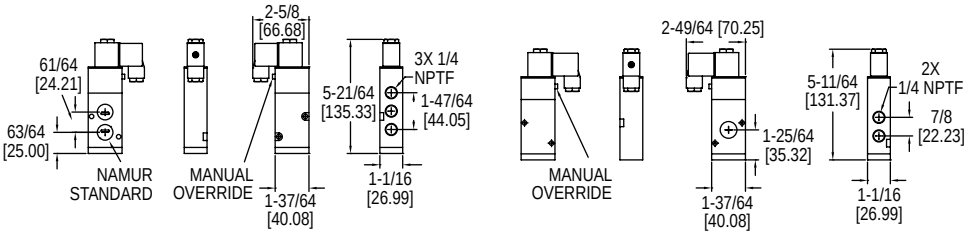

SN-5X models **SN-3X models**

The **Series SN Namur Mount Solenoid Valve** is designed to easily mount directly to pneumatic valve actuators reducing the need for tubing, fittings or brackets, thereby reducing assembly cost. The SN solenoid comes with nitrile O-rings and offers a manual override as a standard feature. The 3/2 solenoids are designed for spring return actuators and 5/2 solenoids are designed to be used with double acting actuators. The SN series is available in a variety of voltages for any application.

BENEFITS/FEATURES
- NAMUR mount means the solenoid can be mounted directly to valve actuators
- Designed for double acting or spring return actuators
- 100% continuous duty rating
- Manual override

APPLICATIONS
- Direct mount to pneumatic actuators

SPECIFICATIONS

Service: Air only.
Power Requirements: 24 VAC, 110 VAC, 220 VAC, 12 VDC, or 24 VDC.
Supply Pressure: 22 to 116 psi (1.5 to 7.9 bar).
Air Connections: 1/4˝ female NPT.
Temperature Limits: 23 to 140°F (-5 to 60°C).
Electrical Connection: DIN 43650 form A.
Enclosure Rating: IP65.
Mounting: NAMUR.
Standard Features: Manual override.
Weight: 1.0 lb (.45 kg).
Agency Approvals: CE.

MODEL CHART

Model	Power	Action	Actuator Type	Model	Power	Action	Actuator Type
SN-5A	110 VAC	5/2	Double acting	**SN-3A**	110 VAC	3/2	Spring return
SN-5B	220 VAC	5/2	Double acting	**SN-3B**	220 VAC	3/2	Spring return
SN-5C	24 VAC	5/2	Double acting	**SN-3C**	24 VAC	3/2	Spring return
SN-5E	24 VDC	5/2	Double acting	**SN-3E**	24 VDC	3/2	Spring return
				SN-3D	12 VDC	3/2	Spring return

Model SN mounted to an actuator

Dwyer

SERIES RSV

PILOT SOLENOID VALVE

For Use with Remote Valves

RSV1D

RSV1L

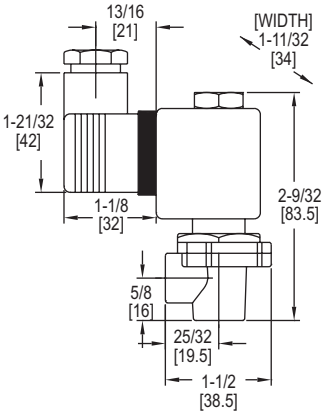

The **Series RSV Pilot Solenoid Valve** is used to operate the Series RDCV remote type diaphragm valve to air pulse clean filters in dust collectors. Consult factory for mounting of RSV valves with our DCT timer boards together in one enclosure all pre-wired.

BENEFITS/FEATURES

- Filtered and oil-free
- Weatherproof enclosure package available
- Can be mounted with DCT timer boards in one enclosure, consult factory

APPLICATIONS

- For use with RDCV remote valve

MODEL CHART

Model	Voltage	Electrical Connections	Cv Value
RSV1D	110 VAC	DIN	.33
RSV2D	220 VAC	DIN	.33
RSV3D	24 VDC	DIN	.33
RSV1L	110 VAC	Wire leads	.33
RSV2L	220 VAC	Wire leads	.33
RSV3L	24 VDC	Wire leads	.33

SPECIFICATIONS

Service: Compatible gases, filtered and oil free.
Wetted Materials: Body: Aluminum; Core and spring: 304 SS; Seals: NBR.
Pressure Limits: Min of 4.4 psi (0.3 bar), max of 124.7 psi (8.6 bar).
Temperature Limits: Ambient: -4 to 122°F (-20 to 50°C); Operating: -4 to 185°F (-20 to 85°C).
Power Requirements: 110 VAC, 220 VAC, or 24 VDC.
Power Consumption: 12 W, inrush: 17 VA, holding: 14.5 VA.
Enclosure Rating: NEMA 4X (IP66).
Electrical Connection: DIN connection or wire leads, 18 AWG, 22″ (55 cm) long.
Process Connection: 1/8″ female NPT.
Mounting Orientation: Any position.
Pneumatic Tube Length: Maximum of 9.8′ (3 m).
Weight: 0.60 lb (0.27 kg).
Agency Approvals: CE.

SERIES SVE

SOLENOID VALVE ENCLOSURES

For the Series RSV Remote Solenoid Valves

SVE06WP61

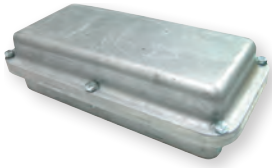

SVE06WP61

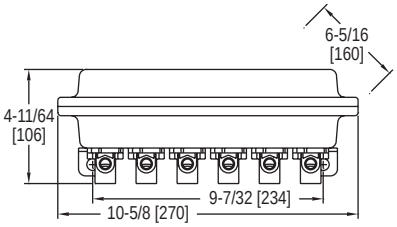

SVE06

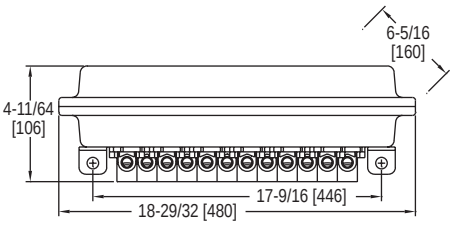

SVE12

The **Series SVE Solenoid Valve Enclosures** are multi-valve enclosures for the RSV pilot valve. The SVE offers a convenient weatherproof enclosure package with all solenoids pre-wired to a terminal block. Enclosures are available in 6 or 12 valve size with choice of pilot valve voltage.

BENEFITS/FEATURES

- Weatherproof enclosure
- Can order pre-wired to terminal block
- Available in 6 or 12 valve size

APPLICATIONS

- For use with RSV only, compatible gases

MODEL CHART

Model	Quantity of Solenoid	Enclosure Type	Voltage
SVE06WP61	6	Weatherproof	110 VAC
SVE06WP62	6	Weatherproof	220 VAC
SVE06WP63	6	Weatherproof	24 VDC
SVE12WP121	12	Weatherproof	110 VAC
SVE12WP122	12	Weatherproof	220 VAC
SVE12WP123	12	Weatherproof	24 VDC

SPECIFICATIONS

Service: (For RSV) Compatible gases, filtered and oil free.
Wetted Materials: (For RSV) Body: Aluminum; Core and spring: 304 SS; Seals: NBR.
Pressure Limits: (For RSV) Min of 4.4 psi (0.3 bar), max of 124.7 psi (8.6 bar).
Temperature Limits: Ambient: -4 to 122°F (-20 to 50°C); Operating: -4 to 185°F (-20 to 85°C).
Power Requirement: (For RSV) 110 VAC, 220 VAC, or 24 VDC.
Power Consumption: (For RSV) 12 W, inrush: 17 VA, holding: 14.5 VA.
Enclosure Rating: NEMA 4X (IP66).
Enclosure Material: Anodized aluminum with NBR gasket.
Electrical Connection: All RSV are pre-wired to a terminal strip.
Process Connection: (For RSV) 1/8″ female NPT.
Conduit Connection: 3/4″ female NPT.
Mounting Orientation: Any position.
Pneumatic Tube Length: Max of 9.8′ (3 m).

Dwyer

SERIES DCV/RDCV

DIAPHRAGM VALVES

Pulse Valves, Ideal for Dust Collection Systems and Bag Houses

DCV62T1D

DCV20C1D

RDCV62T

RDCV20C

The **Series DCV/RDCV Diaphragm Valves** are ideal for use with the Series DCT1000 and Series DCT500 duct collection timer boards for controlling the air pulse in jet pulse type dust collectors to clean the filters. Both the Series DCV and RDCV have the option for either coupling or NPT connections. The coupling connection allows for a quick and simple installation. Only the stub pipe and blowtube need to be cleaned and deburred before the valve is fit into position. The "T" Series DCV has female threaded connections. Both the "C" and "T" versions have a 90° angle between the inlet and outlet the most suitable configuration for pulse valve applications. The design offers not only ease of installation, but also minimal airflow restriction for an exceptional cleaning pulse. The valves are offered in both integrated and remote coil configurations.

BENEFITS/FEATURES

- Thermoplastic polyurethane diaphragm for longer life
- High flow factor for effective cleaning
- Valve can be mounted in any position
- Quick on and off response time

APPLICATIONS

- Dust collection systems
- Bag houses
- For use with DCT1000 and DCT500

SPECIFICATIONS

Service: Compatible gases, filtered and oil free.
Wetted Materials: Body: aluminum; Trim: 304 SS; Diaphragm and seals: NBR; Diaphragm disc: Polyamide.
Other Materials: Cover: aluminum; Body bolts and spring: 304 SS.
Pressure Limits: Minimum of 4.4 psi (0.3 bar), maximum of 124.7 psi (8.6 bar).
Temperature Limits: Ambient: -4 to 140°F (-20 to 60°C) for RDCV models; -4 to 122°F (-20 to 50°C) for DCV models; Operating: -4 to 185°F (-20 to 85°C).
Power Requirements: 110 VAC, 220 VAC, or 24 VDC for DCV models.
Power Consumption: 12 W, inrush: 17 VA; holding: 14.5 VA for DCV models.
Electrical Connection: DIN connection for DCV models.
Enclosure Rating: NEMA 4X (IP65) for DCV models.
Process Connection: See Catalog page.
Mounting Orientation: Any position.
Agency Approval: CE.

MODEL CHART

Model	Size	Solenoid	Connection	Number of Diaphragms	Cv Factor (gal/min)
RDCV20T	3/4″	Remote	NPT	1	114
RDCV20C	3/4″	Remote	Coupling	1	114
DCV20T1D	3/4″	Integral*	NPT	1	114
DCV20C1D	3/4″	Integral*	Coupling	1	114
RDCV25T	1″	Remote	NPT	1	23
RDCV25C	1″	Remote	Coupling	1	23
DCV25T1D	1″	Integral*	NPT	1	23
DCV25C1D	1″	Integral*	Coupling	1	23
RDCV35T	1-1/2″	Remote	NPT	1	42
RDCV35C	1-1/2″	Remote	Coupling	1	42
DCV35T1D	1-1/2″	Integral*	NPT	1	42
DCV35C1D	1-1/2″	Integral*	Coupling	1	42
RDCV45T	1-1/2″	Remote	NPT	2	51
RDCV45C	1-1/2″	Remote	Coupling	2	51
DCV45T1D	1-1/2″	Integral*	NPT	2	51
DCV45C1D	1-1/2″	Integral*	Coupling	2	51
RDCV50T	2″	Remote	NPT	2	106
DCV50T1D	2″	Integral*	NPT	2	106
RDCV62T	2-1/2″	Remote	NPT	2	136
DCV62T1D	2-1/2″	Integral*	NPT	2	136
RDCV76T	3″	Remote	NPT	2	167
DCV76T1D	3″	Integral*	NPT	2	167

*110 VAC with DIN connector.

MODEL CHART

Example	DCV	20	T	ID	DCV20T1D
Construction	DCV RDCV				Integrated coil Remote coil
Size		20 25 35 45 50 62 76			3/4″ 1″ 1-1/2″ 1-1/2″ (2 diaphragms) 2″ 2-1/2″ 3″
Connection			T C		NPT Coupling
Voltage				1D 2D 3D	110 VAC (for integrated coil only) 220 VAC (for integrated coil only) 24 VDC (for integrated coil only)

ACCESSORIES

Model	Description	Fits Valve Sizes
A-237	1/8″ NPT	3/4″, 1″, 1-1/2″, RSV
A-238	3/8″ NPT	1-1/2″, 2″, 2-1/2″, 3″

A-237

A-238

The muffler accessory can be easily field installed to any diaphragm valve with an exhaust. Pneumatic exhaust ports are on the diaphragm valves that have dual diaphragms and the units with the integral mounted solenoid. The muffler decreases the amount of noise when the air is exhausted from the valve. Valves with dual diaphragms and an integral solenoid have two exhaust ports and will require one A-237 and one A-238.

DIAPHRAGM VALVES

Pulse Valves, Ideal for Dust Collection Systems and Bag Houses

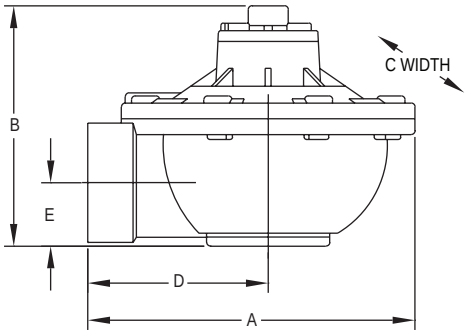

Remote NPT

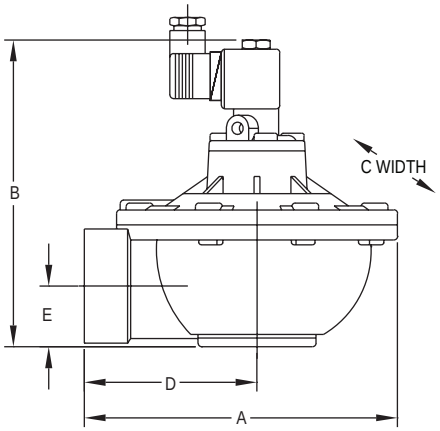

Integrated NPT

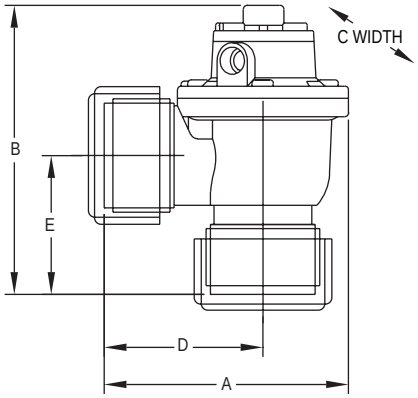

Remote coupling

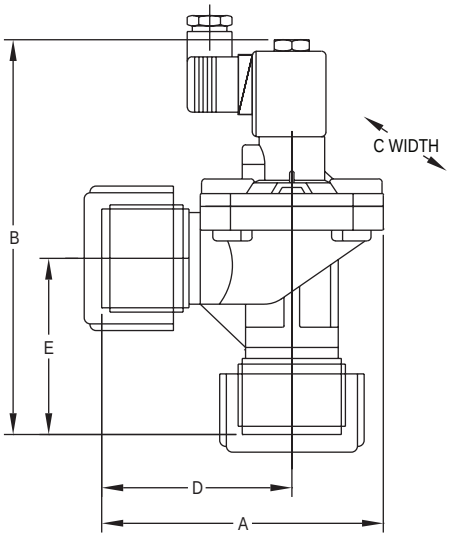

Integrated coupling

DIMENSIONAL CHART								
Solenoid	**Connection**	**Model**	**A (mm)**	**B (mm)**	**C (mm)**	**Weight lb (kg)**	**D (mm)**	**E (mm)**
Remote	**NPT**	**RDCV20T**	3-15/16″ (100)	2-31/32″ (75)	3-7/16″ (87)	1.12 (.51)	2-3/16″ (56)	25/32″ (20)
		RDCV25T	4-1/8″ (105)	3″ (76)	3-1/4″ (83)	1.15 (.52)	2-1/2″ (64)	7/8″ (22)
		RDCV35T	5-1/8″ (130)	4-29/32″ (125)	4-3/8″ (111)	2.0 (.91)	4-1/2″ (114)	1-9/32″ (33)
		RDCV45T	5-25/32″ (147)	5-5/32″ (131)	4-3/8″ (111)	2.2 (1.0)	3-5/8″ (91)	3″ (76)
		RDCV50T	8-1/16″ (205)	5-7/8″ (148)	7-1/4″ (184)	4.2 (1.9)	4-15/32″ (113)	1-9/16″ (40)
		RDCV62T	8-9/32″ (210)	6-11/16″ (170)	7-1/4″ (184)	5.5 (2.5)	4-21/32″ (118)	1-29/32″ (48)
		RDCV76T	8-19/32″ (218)	7-27/32″ (199)	7-7/8″ (200)	6.6 (3.0)	4-21/32″ (118)	2-1/2″ (63)
	Coupling	**RDCV20C**	4-13/32″ (112)	4″ (102)	3-7/16″ (87)	1.37 (.62)	2-5/8″ (67)	1-25/32″ (45)
		RDCV25C	4-5/8″ (117)	5″ (127)	3-1/4″ (83)	2.1 (.96)	3″ (76)	2-3/4″ (70)
		RDCV35C	5-13/16″ (147)	5-15/32″ (139)	4-3/8″ (111)	2.4 (1.1)	3-5/8″ (91)	3″ (76)
		RDCV45C	5-25/32″ (147)	6-25/32″ (172)	4-3/8″ (111)	3.2 (1.45)	3-5/8″ (91)	3″ (76)
Integrated	**NPT**	**DCV20T_D**	3-15/16″ (100)	2-31/32″ (75)	3-7/16″ (87)	1.31 (.59)	2-3/16″ (56)	25/32″ (20)
		DCV25T_D	4-1/8″ (105)	3″ (76)	3-1/4″ (83)	1.33 (.60)	2-1/2″ (64)	7/8″ (22)
		DCV35T_D	5-1/8″ (130)	4-29/32″ (125)	4-3/8″ (111)	2.2 (.99)	4-1/2″(114)	1-9/32″ (33)
		DCV45T_D	5-25/32″ (147)	5-5/32″ (131)	4-3/8″ (111)	2.4 (1.1)	3-5/8″ (91)	3″ (76)
		DCV50T_D	8-1/16″ (205)	5-7/8″ (148)	7-1/4″ (184)	4.4 (2.0)	4-15/32″ (113)	1-9/16″ (40)
		DCV62T_D	8-9/32″ (210)	6-11/16″ (170)	7-1/4″ (184)	5.7 (2.6)	4-21/32″ (118)	1-29/32″ (48)
		DCV76T_D	8-19/32″ (218)	7-27/32″ (199)	7-7/8″ (200)	6.8 (3.1)	4-21/32″ (118)	2-1/2″ (63)
	Coupling	**DCV20C_D**	4-13/32″ (112)	4″ (102)	3-7/16″ (87)	1.55 (.70)	2-5/8″ (67)	1-25/32″ (45)
		DCV25C_D	4-5/8″ (117)	5″ (127)	3-1/4″ (83)	2.3 (1.0)	3″ (76)	2-3/4″ (70)
		DCV35C_D	5-13/16″ (147)	5-15/32″ (139)	4-3/8″ (111)	2.6 (1.2)	3-5/8″ (91)	3″ (76)
		DCV45C_D	5-25/32″ (147)	6-25/32″ (172)	4-3/8″ (111)	3.4 (1.5)	3-5/8″ (91)	3″ (76)

Dwyer

SERIES BHC

BULK HEAD CONNECTORS

Coupling Accessories

BHC35DD

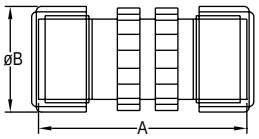

BHC35D

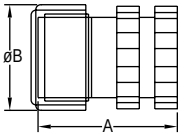

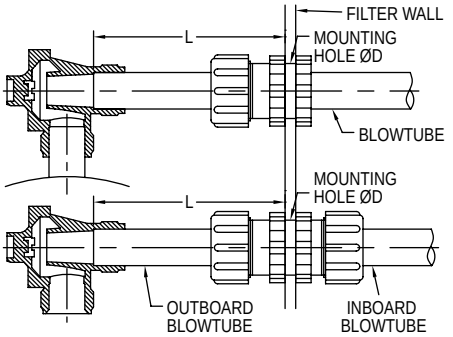

Model	A in [mm]	B in [mm]	D in [mm]	Min L in [mm]
BHC20D	2-3/8″ [60.5]	2-5/16″ [58.5]	1-25/32″ to 2″ [45 to 51]	3-27/32″ [97]
BHC20DD	3-19/32″ [91]	2-5/16″ [58.5]	1-25/32″ to 2″ [45 to 51]	3-27/32″ [97]
BHC25D	2-23/32″ [69]	2-3/4″ [70]	2-7/32″ to 2-7/16″ [56 to 62]	4-21/32″ [118]
BHC25DD	3-31/32″ [101]	2-3/4″ [70]	2-7/32″ to 2-7/16″ [56 to 62]	4-21/32″ [118]
BHC35D	2-15/16″ [75]	3-15/32″ [88]	2-27/32″ to 3-1/16″ [72 to 78]	6-3/16″ [157]
BHC35DD	4-11/32″ [110]	3-15/32″ [88]	2-27/32″ to 3-1/16″ [72 to 78]	6-3/16″ [157]

The **Series BHC Bulk Head Connectors** allow for easy installation of blow tube through the dust collector wall and eliminate the need for welding or use of additional flanges. The fittings enable easy removal and reassembly of blow tubes for cleaning and maintenance. BHC models are available in single connection for through tube mounting or double connection for two piece tube mounting.

BENEFITS/FEATURES
- Available in single connection or double connection
- Enable easy removal and reassembly of blow tubes

APPLICATIONS
- Dust collectors

SPECIFICATIONS

Service: Compatible gases.
Wetted Material: Body, ring nut, DIN nut: Aluminum; Washer: SS41; Gasket: NBR.
Pressure Limits: 124.7 psi (8.6 bar).
Temperature Limits: -4 to 185°F (-20 to 85°C).

MODEL CHART

Model	Size	Connections	Model	Size	Connections
BHC20D	3/4″	One	**BHC25DD**	1″	Two
BHC20DD	3/4″	Two	**BHC35D**	1-1/2″	One
BHC25D	1″	One	**BHC35DD**	1-1/2″	Two

ACCESSORIES

Model	Description
A-237	Muffler

SERIES BICV

BRASS INLINE CHECK VALVE

Economical, Spring-Loaded for Fast Seating

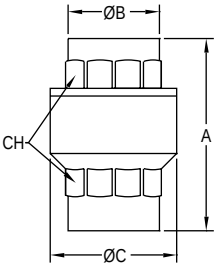

NPT Size	A in [mm]	B in [mm]	C in [mm]	CH in [mm]
1/4″	1-47/64 [44]	51/64 [20]	1-1/16 [27]	51/64 [20]
3/8″	1-47/64 [44]	51/64 [20]	1-1/16 [27]	51/64 [20]
1/2″	2-21/64 [59]	63/64 [25]	1-23/64 [34.5]	63/64 [25]
3/4″	2-9/16 [65]	1-13/64 [30.5]	1-21/32 [42]	1-7/32 [31]
1″	2-49/64 [70]	1-31/64 [37.5]	1-15/16 [49]	1-1/2 [38]
1-1/4″	2-15/16 [74.5]	1-7/8 [47.5]	2-13/32 [61]	1-57/64 [48]
1-1/2″	3-11/64 [80.5]	2-7/64 [53.5]	2-7/8 [73]	2-1/8 [54]
2″	3-3/8 [85.5]	2-11/16 [68]	3-15/32 [88]	2-41/64 [67]
2-1/2″	4-3/8 [111]	3-15/64 [82]	4-25/64 [111.5]	3-17/64 [83]
3″	4-55/64 [123.5]	3-27/32 [97.5]	5-15/64 [133]	3-55/64 [98]
4″	5-13/32 [137.5]	5 [127]	6-27/64 [163]	5-3/64 [128]

The **Series BICV Brass Inline Check Valve** is ideal for use with a broad array of service mediums including compatible oils, gases, fuels and hydrocarbons. They incorporate a soft seat for a bubble-tight shutoff and are spring-loaded for rapid reseating at high and low temperatures. The Series BICV was designed with a smooth flow profile to minimize head loss and accumulation of debris. The low 0.5 psi (0.04 bar) cracking pressure and patented guided-disc technology ensure reliability at low and high service pressure.

BENEFITS/FEATURES
- Soft seat for bubble-tight shut off
- Spring loaded for rapid reseating at high and low temperatures
- Patented guided-disc technology

APPLICATIONS
- To protect equipment against possible damage or contamination resulting from a reversal of flow direction

SPECIFICATIONS

Service: Liquids and gases compatible with wetted material.
Body: 1-piece.
Line Size: See model chart.
Process Connection: Female NPT.
Pressure Limits: 1/4″ to 2″: 400 psi (27.6 bar) WOG; 2-1/2″ to 4″: 175 psi (12.1 bar) WOG; All sizes: 125 psi (8.6 bar) SWP.
Wetted Materials: Valve body: Brass (CW617N); Obstructer: Polyethermide; Seat: 1/4″: NBR rubber, 3/8″ to 4″: Fluoroelastomer; Spring: 302 SS.
Temperature Limits: 10 to 352°F (-12 to 178°C).

MODEL CHART

Model	Connection Size	Cv Value	Weight
BICV-0N00	1/4″	4.55	3.5 oz (100 g)
BICV-0F01	3/8″	4.55	5.9 oz (168 g)
BICV-0F02	1/2″	6.0	5.1 oz (145 g)
BICV-0F03	3/4″	11.0	7.8 oz (222 g)
BICV-0F04	1″	16.9	10.9 oz (308 g)
BICV-0F05	1-1/4″	27.4	1.1 lb (.051 kg)
BICV-0F06	1-1/2″	39.1	1.6 lb (0.73 kg)
BICV-0F07	2″	60.7	2.3 lb (1.03 kg)
BICV-0F08	2-1/2″	98.4	4.8 lb (2.19 kg)
BICV-0F09	3″	158.0	6.7 lb (3.04 kg)
BICV-0F10	4″	225.4	12.4 lb (5.64 kg)

USA: California Proposition 65
⚠**WARNING:** This product can expose you to chemicals including Lead, which is known to the State of California to cause cancer and birth defects or other reproductive harm. For more information go to www.P65Warnings.ca.gov.

Dwyer

SERIES HNV

NEEDLE VALVE 1-VALVE BLOCK MANIFOLDS

For Use with Gas and Liquids, Pressures Up to 6000 psi

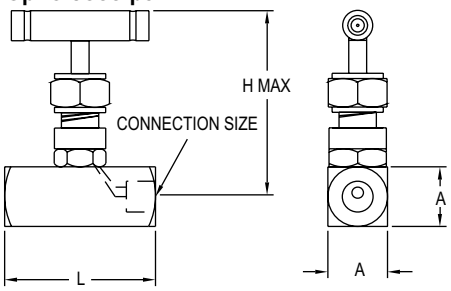

Connection	A in [mm]	L in [mm]	H in [mm]
1/8″ F x F	-	1-31/32 [50.01]	-
1/8″ M x F	7/8 [22.3]	2-11/64 [55.17]	2-3/8 [60.33]
1/4″ F x F	-	2-3/8 [60.33]	-
1/4″ M x F	63/64 [25]	2-9/16 [65.09]	2-9/16 [65.09]
3/8″ F x F	-	2-3/8 [60.33]	-
3/8″ M x F	63/64 [25]	2-9/16 [65.09]	2-9/16 [65.09]
1/2″ F x F	-	2-9/16 [65.09]	-
1/2″ M x F	1-17/64 [32.15]	2-49/64 [70.25]	2-49/64 [70.25]
3/4″ F x F	-	2-61/64 [59.13]	-
3/4″ M x F	1-1/2 [38.10]	3-5/32 [80.17]	3-23/64 [85/33]
1″ F x F	-	3-23/64 [85.33]	-
1″ M x F	1-25/32 [45.24]	4-7/64 [104.38]	3-3/4 [95.25]

Series HNV Needle Valve 1-Valve Block Manifolds are barstock style needle valves that is designed for isolating instruments from liquids or gases. The valve series features fine threading and large seat area to ensure tight shutoff. Wetted materials are 316 SS and PTFE making these ideal for use with corrosives. The HNV has been tested to assure vibration and thermal stability.
Body includes a lock pin to prevent accidental bonnet disengagement. The HNV is available in male x female and female x female connections from 1/8″ to 1″. Tee handle is constructed of 316 stainless steel and allows low torque operation.

BENEFITS/FEATURES
- Pressures to 6000 psi
- Fine threading and large seat area to ensure tight shutoff
- Barstock style needle value
- 316 SS and PTFE wetted materials
- Includes lockpin to prevent accidental bonnet disengagement

APPLICATIONS
- Instruments line shut off, instrument isolation, drain valve, specially designed for gas service and liquid applications

SPECIFICATIONS
Service: Gases and liquids compatible with wetted materials.
End Connections: NPT.
Wetted Materials: 316 SS and PTFE packing.
Pressure Limits: 6000 psi (431 bar) @ 200°F (93°C). 4000 psi (276 bar) @ 464°F (240°C).
Temperature Limits: 464°F (240°C).
Other Materials: Handle: 316 SS.

MODEL CHART

Pipe Size	Female x Female Model	Female x Male Model
1/8″	**HNV-SSS31B**	**HNV-SSS21B**
1/4″	**HNV-SSS32B**	**HNV-SSS22B**
3/8″	**HNV-SSS33B**	**HNV-SSS23B**
1/2″	**HNV-SSS34B**	**HNV-SSS24B**
3/4″	**HNV-SSS35B**	**HNV-SSS25B**
1″	**HNV-SSS36B**	**HNV-SSS26B**

MODEL NVII

NEEDLE VALVES

Economical, Pressures Up to 2000 psi, Blowout-Proof Stem

NVII-1B

NVII-2B

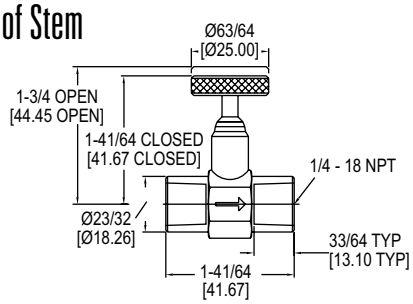

NVII-1B

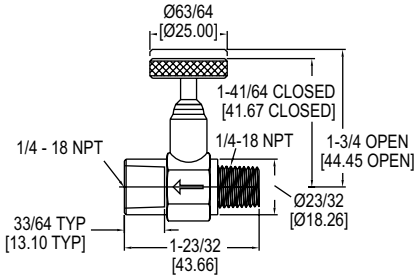

NVII-2B

The **Model NVII Needle Valves** provide easy flow regulation in all applications, including shut off and throttling for pressure gages and instruments. With a one piece, hot forged brass body construction, years of maintenance-free service can be expected. The Model NVII, with its tamper-proof design and blowout-proof stem, provides excellent performance and reliability.

BENEFITS/FEATURES
- Pressures to 2000 psi
- One piece body construction
- Tamper proof design and blowout-proof stem

APPLICATIONS
- Instrument line shut off, instrument isolation, drain valve, and pressure gages

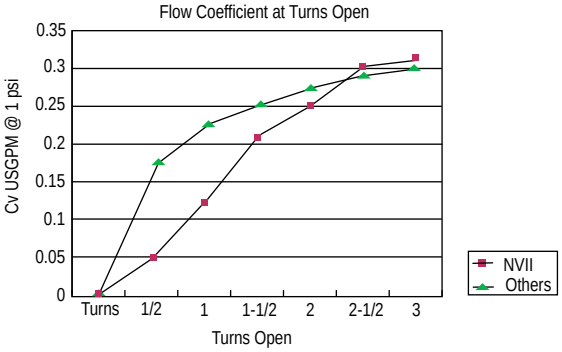

SPECIFICATIONS
Service: Gases and liquids compatible with wetted materials. Not rated for steam use.
End Connection Size: 1/4″ NPT.
Pressure Limit: 2000 psi (138 bar) (CWP).
Wetted Materials: Valve body: Brass (CW617N); Retainer, handwheel: Brass (CW614N); O-ring: Fluoroelastomer.
Temperature Limits: -40 to 350°F (-40 to 176.7°C). (Warning: freezing of the fluid in the installation may severely damage the valve.)
Flow Coefficient: 0.31.
Weight: 0.22 lb.

MODEL CHART

Model	Description
NVII-1B	Needle valve (female x female)
NVII-2B	Needle valve (male x female)

USA: California Proposition 65
⚠**WARNING:** This product can expose you to chemicals including Lead, which is known to the State of California to cause cancer and birth defects or other reproductive harm. For more information go to www.P65Warnings.ca.gov.

Dwyer

SERIES HGV

HAND OPERATED GLOBE VALVE

Low Cost, High Pressure Rating

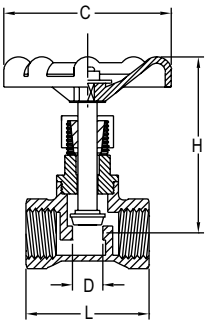

Pipe Size	D in [mm]	L in [mm]	H (Open) in [mm]	C in [mm]
1/4″	13/32 [10]	2-3/64 [52]	4-1/64 [102]	2-3/8 [60]
3/8″	15/32 [12]	2-3/64 [52]	4-1/64 [102]	2-3/8 [60]
1/2″	19/32 [15]	2-3/64 [52]	4-1/64 [102]	2-3/8 [60]
3/4″	25/32 [20]	2-3/8 [60]	4-7/16 [113]	2-3/4 [70]
1″	63/64 [25]	2-53/64 [72]	4-27/32 [123]	2-3/4 [70]
1-1/4″	1-1/4 [32]	3-5/32 [80]	5-53/64 [148]	3-5/32 [80]
1-1/2″	1-37/64 [40]	3-35/64 [90]	6-19/64 [160]	3-17/32 [90]
2″	1-31/32 [50]	4-11/64 [106]	7-3/32 [180]	3-15/16 [100]

The **Series HGV Hand Operated Globe Valve** is an economical and functional alternative to large actuator/control valve packages. Metal-to-metal seating ensures excellent flow control and shut-off service. The body and bonnet are each constructed of CF8M (316) stainless steel for superb corrosion resistance and chemical compatibility.

BENEFITS/FEATURES
- Threaded ends conform to ANSI B 2.1, BS 21, DIN 259/2999, ISO 228
- Stainless steel inside screw, screwed bonnet, swivel disc integral seat, rising stem and hand wheel

APPLICATIONS
- Compatible liquids and gases
- Used for regulation of flow pipelines

SPECIFICATIONS

Service: Compatible liquids and gases.
End Connections: Female NPT.
Pressure Limits: 725 psi (50.0 bar) from -20 to 200°F (-28.9 to 93.3°C); 500 psi (34.5 bar) at 300°F (148.9°C); 450 psi (31.0 bar) at 325°F (162.8°C); 100 psi (6.9 bar) at 350°F (176.7°C).
Wetted Materials: Body, bonnet, packing nut: CF8M (316) SS. disc, stem, retainer ring; Gland: 316 SS; Packing: PTFE.
Temperature Limits: -20 to 356°F (-28.9 to 180°C).
Other Materials: Hand wheel: Cast iron; Plate: Aluminum; Wheel nut: 316 SS.

MODEL CHART

Model	Size	Cv Value	Model	Size	Cv Value
HGV00	1/4″	0.6	**HGV04**	1″	10.69
HGV01	3/8″	1.38	**HGV05**	1-1/4″	17.1
HGV02	1/2″	2.46	**HGV06**	1-1/2″	25.2
HGV03	3/4″	5.76	**HGV07**	2″	47.1

SERIES BYS & SYS

BRASS OR STAINLESS STEEL Y-STRAINERS

Cost Effective, Excellent Filtration, High Flow

BYS ++

SYS

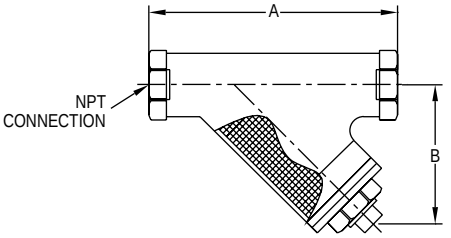

BYS DIMENSIONS

NPT Size	A in [mm]	B in [mm]
1/4″	1-31/32 [50.04]	2-11/16 [68.07]
3/8″	1-31/32 [50.04]	2-11/16 [68.07]
1/2″	1-31/32 [50.04]	2-11/16 [68.07]
3/4″	2-23/64 [59.94]	3-59/64 [99.57]
1″	2-41/64 [67.06]	4-17/32 [115.06]
1-1/4″	3-3/16 [81.03]	5-25/64 [136.91]
1-1/2″	3-7/16 [87.12]	6-17/64 [159.00]
2″	4-19/64 [108.97]	7-31/64 [189.99]

SYS DIMENSIONS

NPT Size	A in [mm]	B in [mm]
1/4″	2-33/64 [64.00]	1-27/32 [46.99]
3/8″	2-33/64 [64.00]	1-27/32 [46.99]
1/2″	2-33/64 [64.00]	1-27/32 [46.99]
3/4″	3-1/16 [78.00]	2-15/64 [56.90]
1″	3-35/64 [90.00]	2-41/64 [67.06]
1-1/4″	4-11/64 [106.00]	2-53/64 [71.88]
1-1/2″	4-11/16 [119.00]	3-5/32 [80.01]
2″	5-33/64 [140.00]	3-21/32 [92.96]

The **Series BYS & SYS Brass or Stainless Steel Y-Strainers** are a cost effective option for use in any type of industrial application. Versatile Y configuration and availability in a wide range of sizes allow for many different uses. Body, cap, and plug are made from either a high quality brass or stainless steel to ensure reliability. The seal is constructed of PTFE to ensure long service life. The stainless steel strainer provides excellent filtration to help prevent damage to valves, meters, etc. from rust and dirt, without sacrificing high flow characteristics.

BENEFITS/FEATURES
- Cost effective
- Stainless steel strainer

APPLICATIONS
- Ideal for installations upstream to proect pumps, control valves, regulators, etc from rust, pipe scale dirt

SPECIFICATIONS

Service: Gases, steam and liquids compatible with wetted materials.
End Connections: Female NPT.
Pressure Limits: See model chart.
Temperature Limits: -10 to 250°F (-23 to 121°C).
Wetted Materials: BYS: Valve body: Cast brass; Cap and plug: Brass; Screen: SS; Seal: PTFE; SYS: Valve body and cap: Cast 316 SS (CF8M); Plug and screen: 316 SS; Seal: PTFE.

MODEL CHART

Model	Pipe Size	Max. Pressure	Model	Pipe Size	Max. Pressure
BYS-00	1/4″	400 psi (27.6 bar)	**SYS-00**	1/4″	800 psi (55.2 bar)
BYS-01	3/8″	400 psi (27.6 bar)	**SYS-01**	3/8″	800 psi (55.2 bar)
BYS-02	1/2″	400 psi (27.6 bar)	**SYS-02**	1/2″	800 psi (55.2 bar)
BYS-03	3/4″	400 psi (27.6 bar)	**SYS-03**	3/4″	800 psi (55.2 bar)
BYS-04	1″	300 psi (20.7 bar)	**SYS-04**	1″	800 psi (55.2 bar)
BYS-05	1-1/4″	300 psi (20.7 bar)	**SYS-05**	1-1/4″	800 psi (55.2 bar)
BYS-06	1-1/2″	300 psi (20.7 bar)	**SYS-06**	1-1/2″	800 psi (55.2 bar)
BYS-07	2″	300 psi (20.7 bar)	**SYS-07**	2″	800 psi (55.2 bar)

++USA: California Proposition 65
⚠**WARNING:** This product can expose you to chemicals including Lead, which is known to the State of California to cause cancer and birth defects or other reproductive harm. For more information go to www.P65Warnings.ca.gov.

Dwyer

SERIES BBV-0

2-VALVE BLOCK MANIFOLDS

Stainless Steel Body, NPT Connections

BBV-0F

BBV-0N

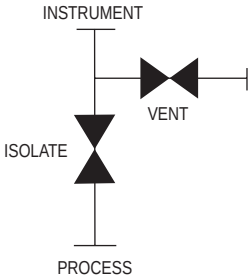

The **Series BBV-0 2-Valve Block Manifolds** are perfect for use over a broad range of industrial applications including oil refineries, nuclear power stations, petrochemical processing, and more. The Series BBV-0 is forged from 316 stainless steel bar stock and designed to withstand repeated open and close operations. Suited to control oil, water, toxic fluids, chemicals, air, and steam; the 2-valve block manifold has (1) isolate and (1) vent valves. Each valve stem is precision machined with hard seats to reduce operating torque.

BENEFITS/FEATURES
- 6000 psi pressure limit
- 316 stainless steel body, stem and valve assembly
- PTFE stem packing

APPLICATIONS
- Industrial gage or transmitter isolation

SPECIFICATIONS

Service: Compatible liquids, gases, or steam.
End Connections: Process connection: 1/2″ male NPT; Instrument connection: No flange: 1/2″ female NPT; Flange: 1/2″ DIN 19213 flange; Vent/test: 1/4″ female NPT.
Wetted Materials: Body, stem, valve assembly: 316 SS; Stem packing: PTFE.
Pressure Limit: 6000 psi (400 bar).
Temperature Limit: 464°F (240°C).
Other Materials: Handle: 304 SS.

MODEL CHART

Model	Description
BBV-0F	Flanged 2-valve block manifold
BBV-0N	2-valve block manifold

SERIES BBV-1

3-VALVE BLOCK MANIFOLDS

Stainless Steel Body, NPT Connections

BBV-1M

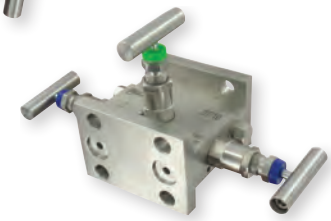

BBV-1D

BBV-1F

BBV-1

*Please see website for dimensional drawing

BBV-1B

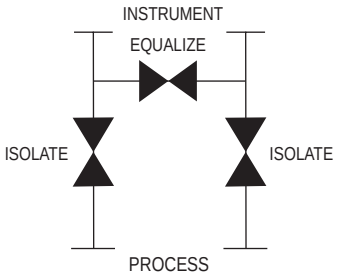

Flow diagram

The **Series BBV-1 3-Valve Block Manifolds** can be used over a broad range of industrial applications including oil refineries, nuclear power stations, petrochemical processing, and more. The Series BBV-1 body is forged from 316 stainless steel bar stock and designed to withstand repeated open and close operations. Suited to control oil, water, toxic fluids, chemicals, air, and steam.

BENEFITS/FEATURES
- High pressure shut-off
- All stainless steel and PTFE wetted materials
- Precision machined hard seats to reduce operating torque

APPLICATIONS
- Industrial gage or transmitter isolation

SPECIFICATIONS

Service: Compatible liquids, gases, or steam.
End Connections: BBV-1B: 1/4″ NPT x 1/4″ NPT; BBV-1: 1/2″ NPT x 1/2″ NPT BBV-1F: 1/2″ NPT x DIN 19213 flange; BBV-1M: 1/2″ NPT x DIN 19213 flange; BBV-1D: DIN 19213 flange x DIN 19213 flange.
Wetted Materials: Body, stem, valve assembly: 316 SS; Stem packing: PTFE.
Pressure Limit: 6000 psi (400 bar).
Temperature Limit: 464°F (240°C).
Other Material: Handle: 304 SS.

MODEL CHART

Model	Description
BBV-1B	Mini 3-valve block manifold
BBV-1	3-valve block manifold
BBV-1F	Flanged 3-valve block manifold
BBV-1M	Multiplanar 3-valve manifold
BBV-1D	Double flanged 3-valve block manifold

Dwyer

SERIES BBV-2

5-VALVE BLOCK AND BLEED MANIFOLDS

Stainless Steel Body, NPT Connections

BBV-21

BBV-21F

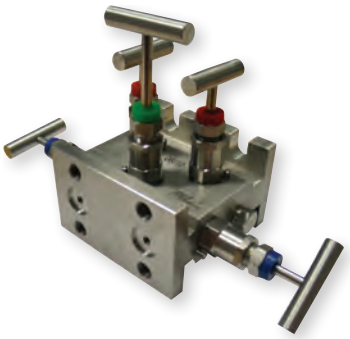

BBV-23F

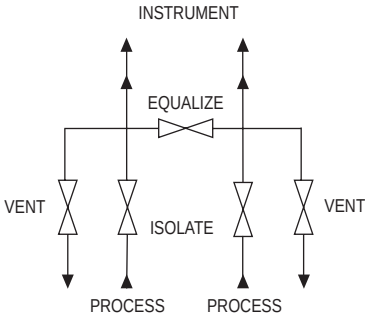

Flow diagram

BBV-22

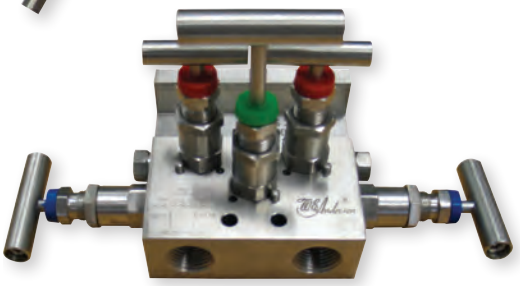

BBV-22F

Series BBV-2 5-Valve Block and Bleed Manifolds are ideal for use over a broad range of industrial applications including oil refineries, nuclear power stations, petrochemical processing, and more. The Series BBV-2 body is forged from 316 stainless steel bar stock and designed to withstand repeated open and close operations. Suited to control oil, water, toxic fluids, chemicals, air, and steam; the 5-Valve Block and Bleed Manifold has (2) isolate, (1) equalizing, and (2) vent valves. Each valve stem is precision machined with hard seats to reduce operating torque.

Flanged models are designed to mount to an industrial differential pressure transmitter. The BBV-21F and BBV-22F come with four 7/16-20 UNF mounting bolts and two PTFE gaskets. The BBV-23F comes with eight 7/16-20 UNF mounting bolts and two PTFE gaskets.

BENEFITS/FEATURES

- High pressure shut-off
- All stainless steel and PTFE wetted materials
- Precision machined hard seats to reduce operating torque

APPLICATIONS

- Industrial gage or transmitter isolation

SPECIFICATIONS
Service: Compatible liquids, gases, or steam.
End Connections: Process connection: No flange: 1/2″ female NPT; Flange: DIN 19213 flange; Instrument connection: No flange: 1/2″ female NPT; Flange: DIN 19213 flange; Vent/test: 1/4″ female NPT.
Wetted Materials: Body, stem, valve assembly: 316 SS; Stem packing: PTFE.
Pressure Limit: 6000 psi (400 bar).
Temperature Limit: 464°F (240°C).
Other Materials: Handle: 304 SS.

MODEL CHART	
Model	**Description**
BBV-21	5-valve manifold with side mounted vent valves
BBV-21F	Flanged 5-valve manifold with side mounted vent valves
BBV-22	5-valve manifold with top mounted vent valves
BBV-22F	Flanged 5-valve manifold with top mounted vent valves
BBV-23F	Double flanged 5-valve manifold with top mounted vent valves

QUICK-VIEW® VALVE POSITION INDICATORS/SWITCHES

Ultra-Low Cost, Compact, Backlit, Corrosion Resistant

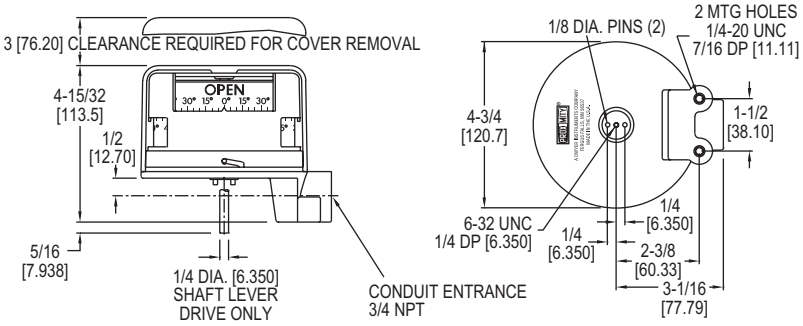

The **Series QV Quick-View® Valve Position Indicators/Switches**, now UL and CSA rated, are produced by Proximity with up to four individual mechanical or proximity switches. The Quick-View® indicator is also available with optional backlighting.

BENEFITS/FEATURES

- The lowest cost position indication
- Extremely compact design
- Easily interchangeable with key competition
- Backlighting option available for maximum visibility
- Quick-View® Indicator and mounting kits, including NAMUR kits, are stocked for fast delivery
- Flame retardant
- UV protection
- Hazardous location option

APPLICATIONS

- Rotary or linear valve indication
- Industrial damper position monitoring

SPECIFICATIONS

Minimum Rotation Travel (Switches only): 5°.
Maximum Rotation Travel (Switches only): 360°.
Temperature Limits: -40 to 180°F (-40 to 82°C).
Switch Type: SPDT.
Electrical SPDT Switch Ratings: QV-X1XXXX: 10 A @ 125/250 VAC; 0.5 A 125 VDC; 10 A @ 24 VDC mech. switch; QV-X2XXXX: 1 A @ 125 VAC; 1A @ 24 VDC mech. switch; QV-X3XXXX: 2 A @ 125 VAC; 2A @ 30 VDC prox. switch; QV-X4XXXX: 5-25 VDC namur sensor; QV-X5XXXX: 10-30 VDC inductive sensor; QV-X6XXXX: 10 A @ 125/250 VAC mech. switch.
Lighting Supply Voltage: 24-28 VDC.
Enclosure Material: Polycarbonate housing and conduit.
Conduit Entrance: One 3/4″ NPT.
Enclosure Rating: NEMA 4, 4X (IP66, IP56). Optional explosion-proof, rated: Class I, Groups A, B, C, D; Class II, Groups F and G; Div. 2.
Maximum Altitude: 2000 m (6560 ft).
Agency Approvals: CE, CSA, cULus.

MODEL CHART

Model	Backlighting
QV-210101	No
QV-210111	Yes

Note: Stocked position indicators include two 10 amp SPDT mechanical snap switches, are direct drive type and include the standard quarter-turn OPEN/CLOSED visual indicator. Standard units are CSA and UL approved but not for hazardous locations. Specify "EX" for hazardous location option.
Consult factory for optional VI colors.

Model QV mounted to an actuator

MODEL CHART

Example	QV	-2	1	01	0	1		QV-210101
Series	QV							Quick-View® valve position indicator/switch
Number of Switches		0 1 2 3 4						None* One* Two* Three* Four*
Switch Type			0 1 2 3 4 5 6					No switches* 10A mechanical snap switch 1A mechanical gold contacts 2A Proximity reed switch* 5-25 VDC namur sensor 10-30 VDC inductive sensor 10A mechanical snap switch
Driving Style				01 02 03				Direct* Lever* Namur*
Lighting Option					0 1			None* 24-28 VDC bright white LED's
Visual Indication						0 1 2		None Standard (open closed)* Upside down (open closed)*
Additional Options							EX	Class I, Div. II, Groups A, B, C and D; Class II, Div. II Groups F and G.

*EX, Explosion-proof option available.

Note: The 1st, 2nd, 3rd and 6th codes can not all be zero.

Dwyer
SERIES MARK

POSITION INDICATORS/SWITCHES/TRANSMITTERS

Mark 1
stainless steel
(environmentally sealed
for corrosive areas)

Mark 1
polyester coated aluminum
(environmentally sealed
for corrosive areas)

Mark 1
magnetic coupling cutaway
Model 12VDOJ2

Mark 3
multi turn

Mark 4
thru-shaft cutaway
Model 42RDOJ2

The Proximity™ **Series Mark Position Indicators/Switches/Transmitters** are a line of position indicators with a selection of various output options. Three model styles make up the Mark series to cover almost any application. Standard models in the Mark Series have visual position indicators and are weatherproof, explosion-proof, and submersible. A large variety of outputs are available to fit specific applications. There is a choice of 1 to 6 switch outputs of 14 varieties including inductive sensors, high temperature switches, gold contact switches, hermetically sealed switches, and high current switches. Besides the switch outputs the Series offers potentiometer outputs, transmitters, and HART® Communication. The units are purchased for either direct drive applications, such as rotary valves, or lever drive applications, such as linear valves. Adjustable visual indicator is standard on direct drive units that displays OPEN / CLOSED status and degrees.
A magnetic drive that completely seals the switch compartment from the atmosphere for maximum leak protection is utilized in the Mark 1. The Mark 3 uses the same magnetic drive of the Mark 1, but it can be used for multi-turn applications with 1 to 25 revolutions, such as gate valves. A through shaft drive is incorporated in the Mark 4 making the unit a more cost effective alternative to the Mark 1 for applications that are not as demanding.

APPLICATIONS
- Rotary valve actuators and dampers
- Linear valve actuators and cylinders
- Manual valves
- Gear operators
- Positioners

MARK 1 BENEFITS/FEATURES
- Features a magnetic coupling that isolates the switch compartment, completely sealing the unit from the surrounding atmosphere for maximum hazard and leak protection
- EZ set cams on switch models provide simple set point adjustment
- Flexible design allows multiple switches and transmitter options
- Ideal for corrosive environments

MARK 3 BENEFITS/FEATURES
- Features a magnetic coupling that isolates the switch compartment, completely sealing the unit from the surrounding atmosphere for maximum hazard and leak protection
- Multi-Turn models that can provide switch signals between 1 and 25 revolutions, and transmitter models for up to 10 revolutions without gear reduction
- Flexible design allows multiple switches and transmitter options
- Ideal for corrosive environments

MARK 4 BENEFITS/FEATURES
- Thru-Shaft design that features a 1″ bushing for long life and O-rings to seal the switch compartment for hazard, corrosion, and leak protection
- EZ set cams on switch models provide simple set point adjustment
- Flexible design allows multiple switches and transmitter options
- A more cost effective alternative to the Mark 1 Series for less demanding applications

Mark Series
mounted to an actuator

MODEL CHART

Model	Function	Design	Model	Function	Design
12AD0	2 SPDT	Magnetic coupling	**42AD0**	2 SPDT	Thru-shaft drive
12AL0	2 SPDT (lever drive)	Magnetic coupling	**44AD0**	4 SPDT	Thru-shaft drive
14AD0	4 SPDT	Magnetic coupling	**45VD0**	2 SPDT and 4-20 mA position transmitter	Thru-shaft drive
15VD0	2 SPDT and 4-20 mA position transmitter	Magnetic coupling	**42VD0-J1**	2 SPDT	Thru-shaft drive
12AD1	2 SPDT	Magnetic coupling	**44VD0-J1**	4 SPDT	Thru-shaft drive
14AD1	4 SPDT	Magnetic coupling			
12VD0-J1	2 SPDT	Magnetic coupling			
14VD0-J1	4 SPDT	Magnetic coupling			

Stainless Mounting Kit
1/4 turn actuator
Manual 1/4 turn valves
Linear control valves

Mounting kits with drive yoke (see drawing), or slotted lever arm, bracket, fasteners and other stainless steel hardware fit over 2000 popular valves and actuators. A high strength spring tempered stainless steel drive yoke/coupling is tailored to fit securely to a specific valve or actuator stem. There is no slippage or binding. No special alignment fixtures are required due to switch offset design and yoke to stem engagement that makes installation a “snap”. Each kit is specially designed for a particular valve or actuator, making field mounting simple with standard tools. Please specify make and model of valve or actuator on order.
Mounting kits can be used interchangeably with all models since external mounting features are identical. Rotary valves utilize direct drive couplings and a slotted lever drive is used with linear valves. Lever drives convert linear motion to rotary. Stainless steel visual indicators are standard for direct drive, automated quarter-turn valve applications.

POSITION INDICATORS/SWITCHES/TRANSMITTERS

MODEL CHART										
Construction	1						Mark 1, magnetic coupling	Available options "A" signifies available with corresponding construction style		
	3						Mark 3, multi-turn			
	4						Mark 4, thru-shaft			
								Mark		
								1	3	4
Output Type		1					1 switch	A	--	A
		2					2 switches	A	A	A
		3					1 kΩ potentiometer 1/2%. Available with switches, see note below*	A	A	A
		31					1 kΩ potentiometer 1/4%. Available with switches, see note below*	A	A	A
		32					2 kΩ potentiometer. Available with switches, see note below*	A	A	A
		35					5 kΩ potentiometer. Available with switches, see note below*	A	A	A
		310					10 kΩ potentiometer. Available with switches, see note below*	A	A	A
		320					20 kΩ potentiometer. Available with switches, see note below*	A	A	A
		4					4 switches	A	A	A
		5					Transmitter 1 kΩ potentiometer 1/2%. 4-20 mA. Available with switches, see note below*	A	A	A
		51					Transmitter 1 kΩ potentiometer 1/4%. Available with switches, see note below*	A	A	A
		52					Transmitter 2 kΩ potentiometer. Available with switches, see note below*	A	A	A
		7					AS-interface and 1 switch. Available with switch types B, I, R, W	A	A	A
		8					AS-interface and 2 switches. Available with switch types B, I, R, W	A	--	A
		9					Transmitter with HART® communication. Available with switches, see note below*	A	--	A
Switch Type and Rating			A				SPDT snap, rated: 15 A @ 125/250/480 VAC (~) ; 1/8 hp @ 125 VAC (~), 1/4 hp @ 250 VAC (~), 1/2 A @ 125 VDC (⎓), 1/4 A @ 250 VDC (⎓)	A	A	A
			B				Inductive sensor. 10-30 VDC (⎓). Load: 0.1 A	A	--	A
			C				SPDT high temperature snap, 350°F (176°C) for 600 hours, rated:15.1 A @ 125/250/277 VAC (~)	A	A	A
			D				DPDT snap, rated: 10 A @ 125/250 VAC (~), 0.3 A @ 125 VDC (⎓),0.15 A @ 250 VDC (⎓)	A	A	A
			G				SPDT gold contact snap, rated: 1 A @ 125 VAC (~)	A	A	A
			H				SPDT hermetically sealed snap, rated: 1 A @ 125 VAC (~)	A	--	A
			I				NAMUR inductive sensor. 15 mA max @ 5-25 VDC (⎓)	A	--	A
			M				SPDT magnetic blow-out, rated: 10 A @ 125 VAC (~)/VDC (⎓), 1/4 hp @ 125 VAC (~)/VDC (⎓)	A	A	A
			O				No switches	A	A	A
			R				SPDT hermetically sealed reed, rated: 2 A @ 125 VAC (~), 2 A @ 24 VDC (⎓)	A	--	A
			S				SPDT snap, rated: 4 A @ 125/250 VAC (~)	A	--	A
			T				SPDT high temperature snap, 250°F (121°C) continuous, rated: 5 A @ 125/250/480 VAC (~)	A	A	A
			V				SPDT snap, rated: 10 A @ 125/250 VAC (~), 1/3 hp @ 125/250 VAC (~), 1/2 A @ 125 VDC (⎓), 1/4 A @ 250 VDC (⎓), 4 A @ 125 VAC (~) (tungsten)	A	A	A
			W				SPDT gold contact snap, rated 0.1 A @ 125 VAC (~)	A	A	A
Driving Method				A			A direct or yoke drive without visual indicator	A	A	A
				D			Direct drive (or yoke) with visual indicator	A	A	A
				E			Direct or yoke drive with visual indicator, single window	A	A	A
				L			Lever drive (shaft projection) without visual indicator	A	A	A
				M			Lever (shaft projection) with visual indicator	A	A	A
Enclosure					0		Aluminum, painted black	A	A	A
					1		Aluminum, painted white epoxy with SS trim	A	A	A
					2		Aluminum, painted red	A	A	A
					5		Aluminum, painted (color not yet specified)	A	A	A
					6		Cast 316 SS	A	A	A
					7 thru 20		Aluminum, painted (color not yet specified)	A	A	A
Options						C1	Long dwell cam (not on Mark 3)	A	--	A
						C2	Double cam (not on Mark 3)	A	--	A
						FKM	FKM seals	A	A	A
						J1	Junction package with one 1/2″ NPT female conduit connection and terminal strip	A	A	A
						J2	Junction package with two 1/2″ NPT female conduit connection and terminal strip	A	A	A
						SV1	1 attached solenoid valve (Must be ordered with J1 option)	A	--	A
						SV2	2 attached solenoid valves (Must be ordered with J2 option)	A	--	A
						MT	Metric threaded conduit connection, M25 X 1.5 (M20 X 1.5 for optional J1 and J2 connections)	A	A	A
						B	Directive 2014/34/EU, KEMA 03ATEX2391 X, CE 2813 Ex II 2G Ex db IIC T6 Gb (-25/-40/-50°C ≤ Tamb ≤ 70°C and T5 for -25°C/-40°C/-50°C ≤ Tamb ≤ 80°C). Depending on output switch type selected	A	A	A
						BX	UKSI 2016:1107 (as amended) DEKRA 21UKEX0274X UK 0518 II 1 G Ex ia IIC T4 Ga	A	A	A
						IS	Any output type except 91: Directive 2014/34/EU, KEMA 03ATEX1392 X, CE 2813 Ex II 1G Ex ia IIC T4 Ga	A	A	A
						ISX	UKSI 2016:1107 (as amended) DEKRA 21UKEX0333X UK 0518 II 1 G Ex ia IIC T4 Ga	A	A	A
						IE	IECEx DEK 11.0056X Ex db IIC T6 Gb (-25/-40/-50°C ≤ Tamb ≤ 70°C and T5 for -25/-40/-50°C ≤ Tamb ≤ 80°C) optional wording depending on output and switch type selected	A	A	A
						II	IECEx DEK 11.0061X Ex ia IIC T4 Ga	A	--	A
						PP	Plug J1, J2 ports	A	A	A
						PT	Paper tag	A	A	A
						STR	SS tag riveted	A	A	A
						STW	SS tag wired	A	A	A

*Mark 1 and 4 potentiometer and transmitter outputs will have no switches when ordered with switch type O; 2 switches if ordered with switch types B, C, D, I, R, V, or W; and 4 switches if ordered with switch type S. Mark 3 potentiometer and transmitter outputs will have no switches when ordered with switch type O, and 2 switches if ordered with switch types A, D, G, M or T.

Example: 12VD0-J1. Mark 1, 2 switches both type V – SPDT, direct drive, painted aluminum enclosure with junction package.
Example: 15VD0. Mark 1, 2 switches both type V – SPDT, 4-20 mA transmitter, direct drive, painted aluminum enclosure.

Dwyer
SERIES MARK

POSITION INDICATORS/SWITCHES/TRANSMITTERS

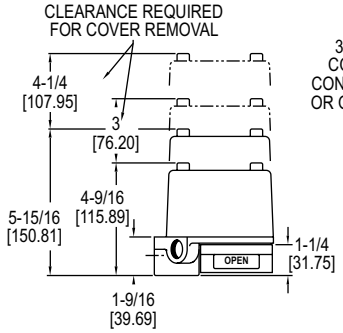

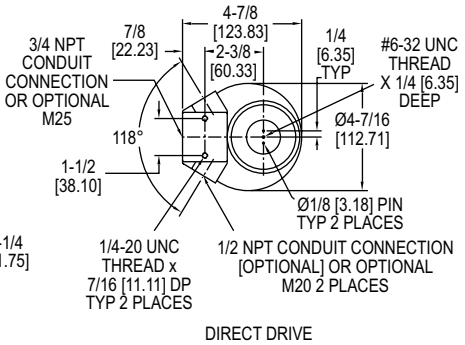

DIRECT DRIVE

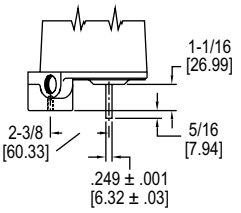

LEVER DRIVE

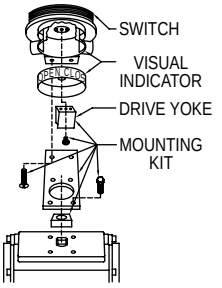

For Models 11, 12, 41 and 42

SPECIFICATIONS

Mark 1, 3, and 4 with Potentiometer
Accuracy: ± 0.5% of full span. Optional ± 0.25% of full span.
Temperature Limits: -40 to 176°F (-40 to 80°C).(flameproof -B, -IE, and -BX suffix, rated -40 to 145°F (-40 to 63°C) for switch types A, G, M, O, R, S, T, V, or W, -13 to 145°F (-25 to 63°C) for switch types B, D, or I.; intrinsically safe -IS, -II, -ISX suffix, rated -13 to 104°F (-25 to 40°C) for switch type I, -40 to 104°F (-40 to 40°C) for switch types O, R, S, V, or W.
Power Rating: 1.5 watt maximum.
Output Signal: 1000 Ω standard. Optional 2000, 5000, 10000, or 20000 Ω.
Zero and Span Adjustments: Span trim pot with 2000Ω adjustment. No zero adjustment.
Rotational Travel: Mark 1 and 4: Minimum: 0°, Maximum: 340°. Mark 3: 0 to 10 revolutions.

Mark 1, 3, and 4 with Transmitter
Accuracy: ± 0.5% of full span. Optional ± 0.25% of full span.
Temperature Limits: -40 to 176°F (-40 to 80°C). (flameproof -B, -IE, and -BX suffix, rated -40 to 145°F (-40 to 63°C) for switch types A, G, M, O, R, S, T, V, or W, -13 to 145°F (-25 to 63°C) for switch types B, D, or I.; intrinsically safe -IS, -II, -ISX suffix, rated -13 to 104°F (-25 to 40°C) for switch type I, -40 to 104°F (-40 to 40°C) for switch types O, R, S, V, or W.).
Power Requirements: 5-30 VDC.
Current Consumption: 50 mA.
Output Signal: 4-20 mA.
Zero and Span Adjustments: Trim pots for adjusting both. Mark 1 and 4: Span is adjustable from 50 to 300°. Mark 3: Span is adjustable from 1.5 to 8.5 revolutions.
Conduit Connection: 3/4″ female NPT standard. Optional one or two 1/2″ female NPT. M25 X 1.5 and M20 X 1.5 optional.
Rotational Travel: Mark 1 and 4: Min.: 50°, max.: 300°. Mark 3: Min.: 1.5 revolutions, max.: 8.5 revolutions.

Mark 1 and 4 Transmitter with HART® Communication
Accuracy: ± 0.5% of full span. Optional ± 0.25% of full span.
Temperature Limits: -40 to 176°F (-40 to 80°C). (flameproof -B, -IE, and -BX suffix, rated -40 to 145°F (-40 to 63°C) for switch types A, G, M, O, R, S, V or W, -13 to 145°F (-25 to 63°C) for switch types B, D or I; intrinsically safe -IS, -II, -ISX suffix, rated -40 to 104°F (-40 to 40°C) for switch types O, R, S, V or W; -13 to 104°F (-25 to 40°C) for switch type I.).
Power Requirements: 8-30 VDC.
Current Consumption: 21 mA.
Output Signal: 4-20 mA.
HART® Receive Impedance: Rx = 500 kΩ; Cx = 2500 pF.
Zero and Span Adjustments: Pushbuttons or HART® communication master for setting both. Mark 1 and 4: Span is adjustable from 0 to 330°. Mark 3: Span is adjustable from 1.5 to 8.5 revolutions.
Conduit Connection: 3/4″ female NPT standard. Optional one or two 1/2″ female NPT. M25 X 1.5 and M20 X 1.5 optional.
Rotational Travel: Mark 1 and 4: Maximum: 330°.

SPECIFICATIONS

Product Ratings:
Weatherproof and flameproof. NEMA 1, 2, 3, 3R, 3S, 4, 4X, 6, 7, 9, 12, 13.

UL rated: class I, div. 1 and 2, groups B, C, D (some units available for group A, consult factory); class II, div. 1 and 2, groups E, F, and G.

CSA rated: class I, div. 1 and 2, groups A, B, C, D; class II, div. 1 and 2, groups E, F, and G. Submersible to 15 meters (IP68); It is up to the end user to source the proper fittings to ensure a watertight seal.

ATEX Compliant:
-B suffix, directive 2014/34/EU, KEMA 03ATEX2391 X, CE 2813 Ex II 2G Ex db IIC T6 Gb for -25°C/-40°C/-50°C ≤ Tamb ≤ 63°C and T5 for -25°C/-40°C/-50°C ≤ Tamb ≤ 63°C, optional wording depending on output and switch type selected. Compliant per EN 60079-0, EN 60079-1.

-IS suffix, directive 2014/34/EU, KEMA 03ATEX1392 X, CE 2813 Ex II 1G Ex ia IIC T4 Ga. Compliant per EN EN 60079-0, EN 60079-11.

IECEx Compliant:
-IE suffix, IECEx DEK 11.0056X Ex db IIC T6 Gb for -25°C/-40°C/-50°C ≤ Tamb ≤ 63°C and T5 for -25°C/-40°C/-50°C ≤ Tamb ≤ 63°C, optional wording depending on output and switch type selected. Compliant per IEC 60079-0, IEC 60079-1.

-II suffix, IECEx DEK 11.0061X Ex ia IIC T4 Ga. Compliant per IEC 60079-0, IEC 60079-11, IEC 60079-26.

UKEX Compliant:
-BX suffix: DEKRA 21UKEX0274X, Ex db IIC T6 Gb for -25°C/-40°C/-50°C ≤ Tamb ≤ 63°C depending on output and switch type selected. Compliant per EN 60079-0 and EN 60079-1.

-ISX suffix: DEKRA 21UKEX0333X, Ex ia IIC T4 Ga, compliant per EN 60079-0 and EN 60079-11.

Electrical Connections: Screw terminal. Optional factory sealed leads that are 36″ (914.4 mm) of 16 AWG.
Conduit Connection: Standard: one 3/4″ female NPT; optional one to two 1/2″ female NPT; WirelessHART® models: two 1/2″ female NPT; Optional: M25 X 1.5 or M20 X 1.5 connections may be supplied in lieu of 3/4″ and 1/2″ female NPT for all models.
Mounting Orientation: Not position sensitive.
Weight: 4 to 6 lb (1.5 to 3.0 kg).
Operational Life: Over 10,000,000 cycles.
Maximum Altitude: 2000 meters.

Mark 1, 3 and 4 with Switch Outputs
Temperature Limits: -58 to 176°F (-50 to 80°C). Switch type C rated to 350°F (176°C) for 600 hours, switch type T rated to 250°F (121°C) continuous. (flameproof -B, -IE, and -BX suffix, rated -58 to 145°F (-50 to 63°C) for switch type A, G, H, T, or M, -40 to 145°F (40 to 63°C) for switch type O, R, S, V, or W, -13 to 145°F (-25 to 63°C) for switch type B, D, I, or AS Interface; intrinsically safe -IS, -II, -ISX suffix, rated -13 to 104°F (-25 to 40°C) for switch type D or I, -40 to 104°F (-40 to 40°C) for switch type R, V, or W, or -58 to 104°F (-50 to 40°C) for switch type A, G, or H.).
Switch Type: See page reference ❶ below.
Electrical Rating: See page reference ❷ below.
Set Point Adjustment: Mark 1 and 4: 5 to 360°.

HART® is a registered trademark of Fieldcomm Group, Inc.

❶Switch Type: See page 435 (Series Mark)
❷Electrical Rating: See page 435 (Series Mark)

Dwyer

SERIES VPS

VALVE POSITION SENSORS

Dual Inductive, 2-Wire AC/DC Sensor, Fully Adjustable Target in 2° Increments

VPS2411

P1

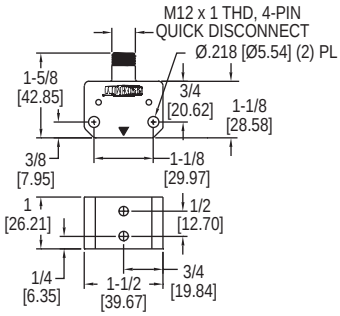

VPS2411

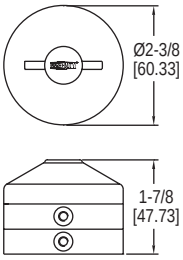

P1

The dual inductive, 2-wire AC/DC **Series VPS Valve Position Sensors** maintain VDI/VDE 3845 dimensions so positioners can be easily mounted on top of the sensor and target. The Model VPS2411 Sensor and Model P1 Target mount easily and directly to actuators with ISO NAMUR topworks (see picture below). Solid state components are fully embedded in an epoxy resin to prevent condensation build-up and to protect against vibration and shock. The rugged PBTP housing provides excellent corrosion resistance and moisture protection.

BENEFITS/FEATURES

- Fully adjustable target in 2° increments
- LED indication for visual indication
- 4-pin quick disconnect electrical connection

APPLICATIONS

- The VPS is used for control element position monitoring and indication with devices such as rotary valve actuators, rotary valves and dampers.

Model VPS and P1 mounted on an actuator

SPECIFICATIONS
Temperature Limits: -13 to 176°F (-25 to 80°C).
Power Requirements: 20-140 VAC (50/60 Hz), 10-200 VDC.
Enclosure Material: Polybutylene terephthalate.
Switch Type: Dual NO.
Electrical Rating: 200 mA.
Minimum Load Current: 5 mA.
Leakage Current: 0.8 mA.
Voltage Drop: 5.0 V.
Repeatability: 0.01 mm.
Hysteresis: 3 to 15% of sensing range.
Switching Frequency: 25 Hz.
Mounting Holes: NAMUR mounting - 3.15″ x 1.18″ (80 x 30 mm) or 5.118″ x 1.18″ (130 x 30 mm).
Electrical Connection: 4-pin quick disconnect.

MODEL CHART

Model	Description
VPS2411	Valve position sensor
P1	Valve position target
VIP82	Quick disconnect cable

Dwyer
SERIES DT

DETECTOR POSITION SENSORS

Reliable Magnetic Point Sensor, Stainless Steel Housing, AC or DC

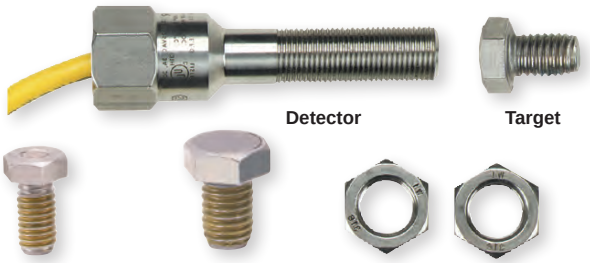

Standard target with DT1060 H (3/8–16 UNC X 3/4˝)

High strength target with DT1160 (1/2–13 UNC X 3/4˝)

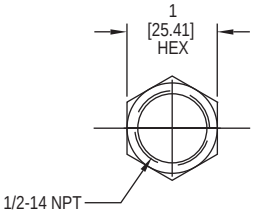

Actuator

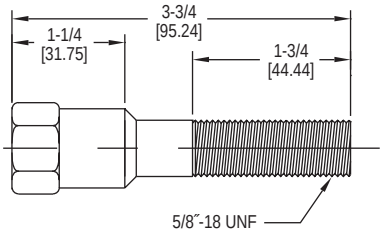

Detector

The **Series DT Detector Position Sensors** are reliable, magnetically actuated, SS, completely interchangeable with competitive units. AC or DC for user friendly operation. They have no moving parts, eliminate costly seal fittings and offer enhanced reliability by eliminating arcing. Unintentional actuation by metals is not a problem. The sensor consists of a durable hermetically sealed reed switch potted in a SS housing and a separate 316 stainless steel magnetic actuator bolt. As the actuator moves within the sensing range of the sensor, the magnet in the actuator changes the state of reed switch contacts inside the sensor. This either opens or closes a circuit depending on wiring configuration. Sensing distance is 0.1˝ (2.54 mm) for the standard target. Greater sensitivity of a larger magnetic target increases the sensing distance to 0.5˝ (12.7 mm).

BENEFITS/FEATURES

- Excellent for hazardous and corrosive environments
- Can be mounted in any position
- Designed to NEMA 1, 3, 4, 4X, 6, 7, 9, 12 and 13

APPLICATIONS

- Position monitoring and indication with devices such as linear valves – actuators and cylinders – rotary valves – dampers

SPECIFICATIONS

Temperature Limits: -40 to 163°F (-40 to 73°C).
Switch Type: Tungsten, SPDT, form C.
Electrical Rating: 3 A @ 125 VAC, 3 A @ 30 VDC.
Enclosure Rating: Weatherproof; Hermetically sealed; Explosion-proof UL and CSA listed for Class I, Groups A, B, C, and D; Class II, Groups E, F and G. Divisions 1 and 2.
Intrinsically Safe: Simple apparatus (with barrier).
Operating/Response Time: 3.0 ms.
Initial Contact Resistance: 0.50 Ω (max).
Repeatability: 0.005˝ (.01 cm).
Hysteresis: 0.030˝ (.08 cm).
Electrical Connection: Factory sealed leads with 18˝ min, 4 conductor, PVC insulated, 18 AWG – green/red/black/white (ground/NC/ NO/common).
Housing: 316 SS.
Potting: Epoxy resin.
Conduit: 1/2˝-14˝ female NPT.
Weight: 0.32 lb (145 g); 0.45 lb (204 g) with actuator.
Agency Approvals: CSA, cULus.

MODEL CHART

Model	Description	Sensing Distance
DT1060	Detector and standard actuator	0.1˝ (2.54 mm)
DT1160	Detector and high strength actuator	0.5˝ (12.7 mm)

Dwyer

SERIES EPTA

ELECTRO-PNEUMATIC TRANSDUCERS

Low Cost, Selectable Input/Output, Manual Override

EPTA-B

EPTA-S

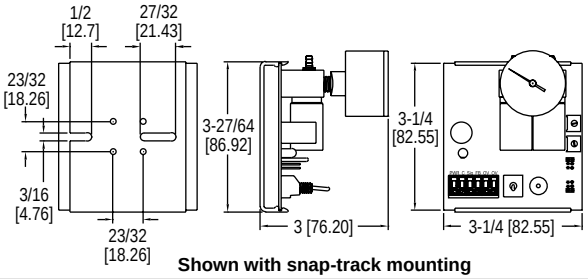

Shown with snap-track mounting

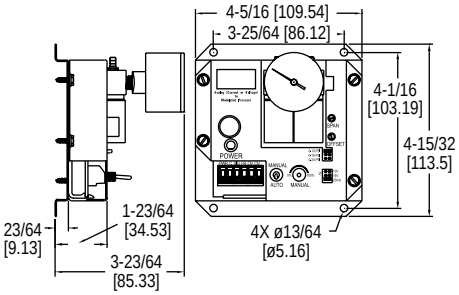

Shown with metal bracket mounting

The **Series EPTA Electro-Pneumatic Transducers** convert an analog input signal to a linearly proportionate pneumatic output by modulating its control valves to regulate branch line pressure to the set point determined by the input signal. All models incorporate two low voltage valves, an integral in-barb filter, a 0 to 30 psi analog gage, an anodized aluminum manifold, and brass barbed fittings. The EPTA offers adjustable span and offset as well as manual override. This unit has no air consumption and is immune to mounting orientation. Output pressure ranges include field-selectable 0 to 10, 0 to 15, and 0 to 20 psig. Also included is an analog 0-5 VDC feedback signal indicating the resultant branch line pressure. Universal 24 VAC/24 VDC supply voltage and field-selectable 4-20 mA, 0-5 VDC, 0-10 VDC, or 0-15 VDC inputs ensure single unit compatibility with most systems. The standard models maintain branch pressure on power loss while the Fail-Safe models will drop the branch pressure to 0 psi on power loss. Mounting configurations include a metal bracket mount in the EPTA-B models and a snap-track mount in the EPTA-S models. The A-400 accessory kit will allow the EPTA-S models to be mounted on a standard DIN rail.

BENEFITS/FEATURES

- Adjustable span and offset
- Manual override
- Field selectable output ranges
- Not position sensitive

APPLICATIONS

- Pneumatic dampers and valve actuators

SPECIFICATIONS

Service: Clean dry air or any inert gas.
Input Signal: DC current (4-20 mA) or DC voltage (0-5/0-10/0-15).
Input Impedance: Current: 250 Ω; Voltage: Infinite.
Output Signal: Jumper selectable 0 to 10 psig (0 to 69 kPa), 0 to 15 psig (0 to 103 kPa), or 0 to 20 psig (0 to 138 kPa).
Feedback Output: 0-5 VDC.
Air Supply: 25 psig (172 kPa) max.
Air Flow: 750 scim.
Air Consumption: 0 scim normal operation, fail-safe model vents to 0 psi on power loss.
Accuracy: ±1.0% FS @ room temperature; ±2.0% FS @ 32 to 120°F (0 to 48.8°C).
Supply Voltage: 24 VDC (+10%/-5%) or 24 VAC (±10%) 50/60 Hz.
Supply Current: 180 mA max, 200 mA max on fail-safe model.
Temperature Limits: Operating: 32 to 120°F (0 to 48.8°C); Storage: -20 to 150°F (-6.7 to 65.6°C).
Operating Humidity Range: 5 to 95%, non-condensing.
Pressure Connections: 1/4″ OD (polyethylene tubing optimum).
Electrical Connections: Plug-in block terminal type with 5 mm pin spacing.
Wire Size: Up to one 14 AWG per terminal.
Weight: EPTA-S0: 6.9 oz. (196 g); EPTA-S1: 9.2 oz. (261 g); EPTA-B: 14.5 oz. (411 g).

MODEL CHART

Model	Description
EPTA-S0	Standard snap-track mount transducer
EPTA-B0	Standard metal bracket mount transducer
EPTA-S1	Snap-track mount transducer with fail-safe
EPTA-B1	Metal bracket mount transducer with fail-safe

ACCESSORIES

Model	Description
A-400	DIN mounting kit
A-403	Replacement integral barb filter

USA: California Proposition 65
⚠ **WARNING:** This product can expose you to chemicals including Lead, which is known to the State of California to cause cancer and birth defects or other reproductive harm. For more information go to www.P65Warnings.ca.gov.

SERIES IP

CURRENT TO PRESSURE TRANSDUCER

Intrinsically Safe, NEMA 4X Enclosure, Field Reversible, Low Cost

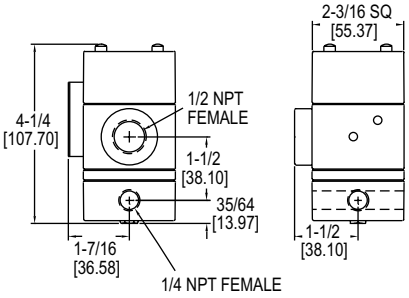

The **Series IP Current to Pressure Transducer** converts a current input signal to a linearly proportional pneumatic output pressure. The features include built-in volume booster, low air consumption, field reversible (provides output which is inversely proportional to input signal) and flexible zero and span adjustments. The rugged NEMA 4X enclosure allows splashdown and outdoor installation. The IP can be used for applications that require operation of valve actuators, pneumatic valve positioners, damper and louver actuators, final control elements and relays.

BENEFITS/FEATURES

- Built-in volume booster
- Low air consumption
- Flexible zero plus span adjustments
- NEMA 4X enclosure
- Field reversible

APPLICATIONS

- Applications that require the operation of valve actuators, pneumatic valve positioners, damper and louver actuators, final control elements, relays, air cylinders, web tensioners, clutches and brakes

SPECIFICATIONS

Service: Oil free, clean dry air filtered to 40 microns.
Input Signal: 4-20 mA.
Input Impedance: IP-42: 180 Ω; IP-43 and IP-44: 220 Ω.
Air Pressure: Min: 3 psig (21 kPa) above max output; Maximum: 100 psig (700 kPa).
Linearity: < ±0.75% of span.
Hysteresis: < 1% of span.
Repeatability: < 0.5% of span.
Supply Pressure Sensitivity: < ±0.1% of span per psig (< ±0.15% of span per 10 kPa).
Power Requirements: Loop-powered.
Temperature Limits: -20 to 140°F (-30 to 60°C).
Pressure Connections: 1/4″ female NPT.
Electrical Connection: 1/2″ female NPT.
Air Consumption: 0.03 SCFM (0.5 m3/h) typical.
Output Capacity: 4.5 SCFM (7.6 m3/h ANR) at 25 psig (175 kPa) supply; 12 SCFM (20 m3/h) at 100 psig (700 kPa) supply.
Relief Capacity: 2 SCFM (3.4 m³/h) at 5 psig (35 kPa) above 20 psig (140 kPa) set point.
Weight: 2.1 lb (0.94 kg).
Compliance: CE, FM.

MODEL CHART

Model	Input Ranges	Output Range psi	Output Range kPa
IP-42	4-20 mA	3 to 15	20 to 100
IP-43	4-20 mA	3 to 27	20 to 185
IP-44	4-20 mA	6 to 30	40 to 200

Dwyer

SERIES 2700 & 2800

CURRENT TO PRESSURE TRANSDUCER

NEMA 4X Enclosure, Compact Size, Reliable

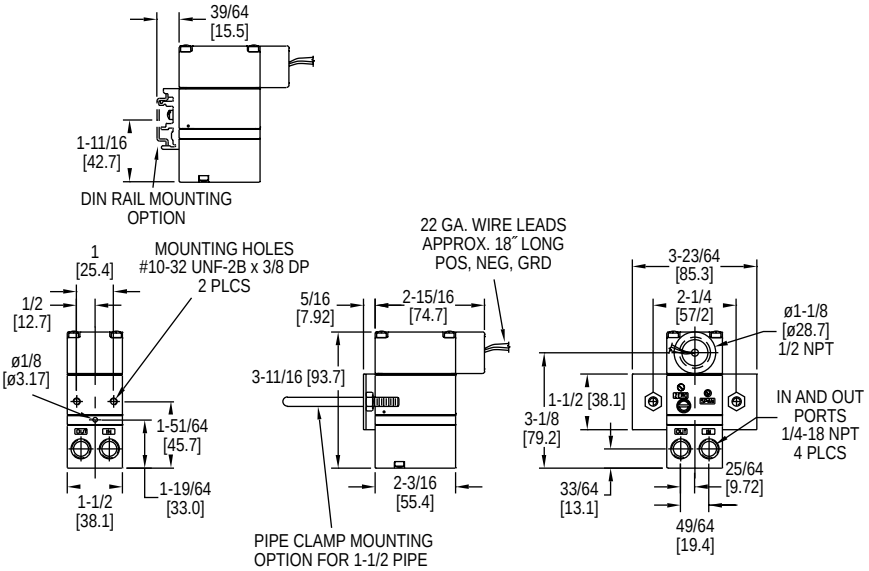

The **Series 2700 Current to Pressure Transducer** combines economical startup cost, low air consumption, and reliable performance to make the 2700 a great investment. The unit converts a variable current signal to a proportional pneumatic output. It has input and output ports on both the front and back which allows for versatile plumbing. The NEMA 4X enclosure enables the unit to be installed indoors or outdoors, however, the unit is not vibration resistant. It is FM and CSA approved for intrinsically safe operation. The 2700 is designed for remote or panel mounting. An integral volume booster provides high flow capacity, increasing control speed in critical applications. Other features include external zero and span adjustments which are convenient for field calibration.

The **Series 2800 Current to Pressure Transducer** utilizes a closed loop pressure feedback system that closely controls output and compensates for vibration, mounting angle, temperature, and supply pressure variations. These characteristics make this unit ideal for field mounting on a valve. The control mechanism is a piezoceramic actuator encapsulated in a protective skin, which provides a constant defense against humidity and contaminants. These features make this unit ideal for use in demanding applications. The 2800 also comes in a NEMA 4X enclosure and is field reversible. It is FM and CSA approved intrinsically safe, as well. For ease of installation, this model has input and output ports on both the front and back and can be easily panel mounted.

SERIES 2700 BENEFITS/FEATURES

- NEMA 4X enclosure
- FM and CSA approved for intrinsically safe
- Designed for remote or panel mounting
- Integral volume booster

SERIES 2800 BENEFITS/FEATURES

- NEMA 4X enclosure
- FM and CSA approved for intrinsically safe
- Vibration and position insensitive
- Input and output ports on front and back

APPLICATIONS

- Controlling valve actuators, pneumatic valve positioners, air cylinders, clutches, brakes, dampers, louvers and pumps

SPECIFICATIONS

Service: Oil free, clean dry air filtered to 40 microns.
Input Signal: 4-20 mA.
Air Supply: Min: 5 psig (0.3 bar) above max output; Max: 100 psig (6.9 bar).
Output: 3 to 15 psig (0.2 to 1.0 bar), 6 to 30 psig (0.4 to 2.1 bar).
Accuracy: Series 2800: ±0.1% of span.
Linearity: Series 2700: < ±0.5% of span.
Hysteresis: Series 2700: < 0.5% of span; Series 2800: ±0.1% of span.
Repeatability: Series 2700: < 0.5% of span; Series 2800: ±0.1% of span.
Deadband: Series 2800: 0.02% of span.
Supply Pressure Sensitivity: Series 2700: < 0.1% of span per 1.0 psig (0.1 bar).
Power Requirement: Loop powered.
Temperature Limits: Series 2700: -20 to 150°F (-29 to 66°C); Series 2800: Operating: -40 to 160°F (-40 to 71°C); Storage: -40 to 200°F (-40 to 93°C).
Pressure Connections: 1/4″ female NPT.
Electrical Connection: 1/2″ female NPT.
Air Consumption: Series 2700: 0.03 scfm (0.01 l/s) at midrange typical; Series 2800: 0.025 scfm (0.01 l/s) at midrange typical.
Output Capacity: 4.5 scfm (2.1 l/s) at 25 psig (1.7 bar) supply; 12.0 scfm (5.7 l/s) at 100 psig (6.9 bar) supply.
Enclosure: Chromate-treated aluminum with epoxy paint.
Enclosure Rating: NEMA 4X (IP66) and intrinsically safe.
Weight: Series 2700: 1.3 lb (0.59 kg); Series 2800: 0.8 lb (0.37 kg).
Compliance: CE, CSA, FM.

SERIES 2700
FM Intrinsically Safe Ratings: Class I, II, III, division 1, groups C, D, E, F and G; Class I, division 2, groups A, B, C and D; Class II and III, division 2, groups F and G.
CSA Intrinsically Safe Ratings: Class I, division 2, groups C and D; Class II, groups E, F and G; Class III.

SERIES 2800
FM Intrinsically Safe Ratings: Class I, II, and III, division 1, groups C, D, E, F, and G; Class I, zone 0, group IIB; Class I, II, and III, division 2, groups A, B, C, D, F, and G.
CSA Intrinsically Safe Ratings: Class I, division 2, groups A, B, C and D; Class II, division 2, groups F and G; Class III.

MODEL CHART

Model	Input	Output
2713-WP	4-20 mA	3 to 15 psig (0.2 to 1.0 bar)
2716-WP	4-20 mA	6 to 30 psig (0.4 to 2.1 bar)
2813-WP	4-20 mA	3 to 15 psig (0.2 to 1.0 bar)
2816-WP	4-20 mA	6 to 30 psig (0.4 to 2.1 bar)

OPTIONS

Description
Valve mount, for factory mounting and calibration to Hi-Flow™ control valves, add current-to-pressure transducer model number as suffix (Series 2800 only)

ACCESSORIES

Model	Description
A-180	Valve mounting bracket, for Hi-Flow™ control valves (Series 2800 only
A-181	DIN rail mounting kit, suitable for EN-50035, EN-50042, and EN-50022 rails
A-182	Pipe mounting kit, for 1-1/2 and 2″ pipes

Regulators: See page 446

Dwyer
SERIES 2900

CURRENT TO PRESSURE TRANSDUCER

Intrinsically Safe, Explosion-Proof, NEMA 4X Enclosure

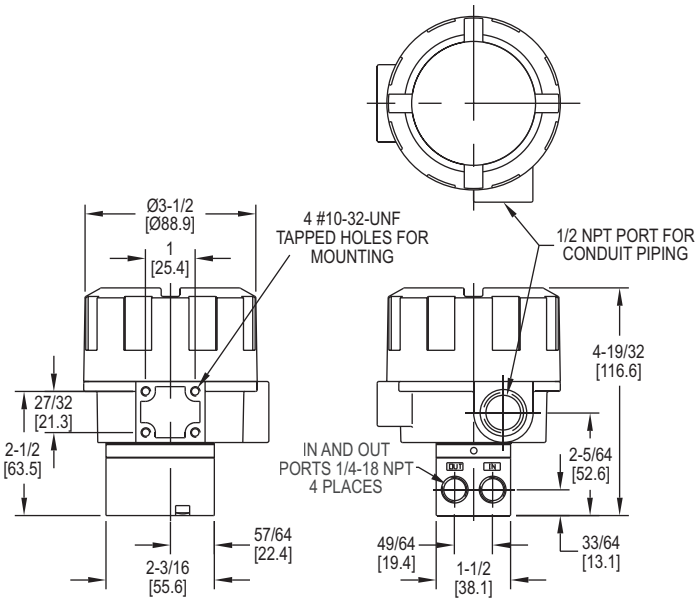

The **Series 2900 Current to Pressure Transducer** delivers reliable high performance for the toughest applications in the most hazardous environments. Its NEMA 4X housing is designed and FM and CSA approved for both intrinsically safe and explosion-proof operation. This unit has advanced circuitry which includes electronic feedback control for superior vibration protection and highly accurate output. The 2900 is not position sensitive and the easily accessible zero and span adjustments make field calibration quick and easy. For ease of installation, this model has input and output ports on both the front and back. It is also not vibration sensitive, which makes the 2900 ideal for field mounting on a valve. These features coupled with the unit's compact size help make set-up and installation simple.

BENEFITS/FEATURES

- Designed for hazardous environments
- Vibration resistant
- Explosion-proof
- Weatherproof and intrinsically safe

APPLICATIONS

- Controlling valve actuators, pneumatic valve positioners, air cylinders, clutches, brakes, dampers, louvers and pumps

MODEL CHART

Model	Input	Output
2913-E	4-20 mA	3-15 psig (0.2-1.0 bar)
2916-E	4-20 mA	6-30 psig (0.4-2.1 bar)

OPTIONS

Description
Valve mount, for factory mounting and calibration to Hi-Flow™ control valves, add current-to-pressure transducer model number as suffix (Series 2800 only)

ACCESSORIES

Model	Description
A-180	Valve mounting bracket, for Hi-Flow™ control valves (Series 2800 only)

SPECIFICATIONS

Service: Oil free, clean dry air filtered to 40 microns.
Input Signal: 4-20 mA.
Air Supply: Min: 5 psig (0.3 bar) above max output; Max: 100 psig (6.9 bar).
Output: 3 to 15 psig (0.2 to 1.0 bar), 6 to 30 psig (0.4 to 2.1 bar).
Accuracy: ±0.1% of span.
Hysteresis: ±0.1% of span.
Repeatability: ±0.1% of span.
Deadband: 0.02% of span.
Power Requirement: Loop powered.
Temperature Limits: Operating: -40 to 160°F (-40 to 71°C); Storage: -40 to 200°F (-40 to 93°C).
Pressure Connections: 1/4″ female NPT.
Electrical Connection: 1/2″ female NPT.
Air Consumption: 0.05 scfm (0.02 l/s) at midrange typical.
Output Capacity: 4.5 scfm (2.1 l/s) at 25 psig (1.7 bar) supply; 12.0 scfm (5.7 l/s) at 100 psig (6.9 bar) supply.
Enclosure: Chromate-treated aluminum with epoxy paint.
Enclosure Rating: Weatherproof NEMA 4X (IP66), explosion-proof and intrinsically safe.
Weight: 1.8 lb (0.82 kg).
Agency Approvals: CE, CSA, FM.

FM Ratings: Explosion-proof for Class I Division 1, Groups B, C, and D. T6, Dust Ignitionproof for Class I, Division 1, Groups E, F, and G, T6; Intrinsically safe for Class I, II, and III, Division 1, Groups C, D, E, F, and G, T4 hazardous (classified) locations and intrinsically safe for Class I, Zone 0, Group IIB, T4 hazardous (classified) locations and suitable for Class I, Groups A, B, C, D, T4, and Class II and III, Division 2, Groups F and G, T6 hazardous (classified) locations.

CSA Ratings: Class I Division 1, Groups B, C, and D; Class I, Division 2, Groups A, B, C and D; Class II, Division 1, Groups E, F, and G; Class II and III, Division 2, Groups F and G.

Filters and Regulators: See page 446

Dwyer

SERIES 165

PRECISOR® II PNEUMATIC AND ELECTRO-PNEUMATIC POSITIONERS

Linear Operation, Field Selectable Cam Design, 316 Stainless Steel Models

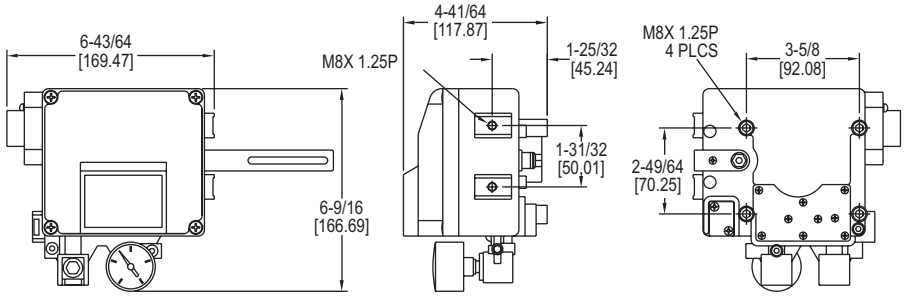

Series 165NL

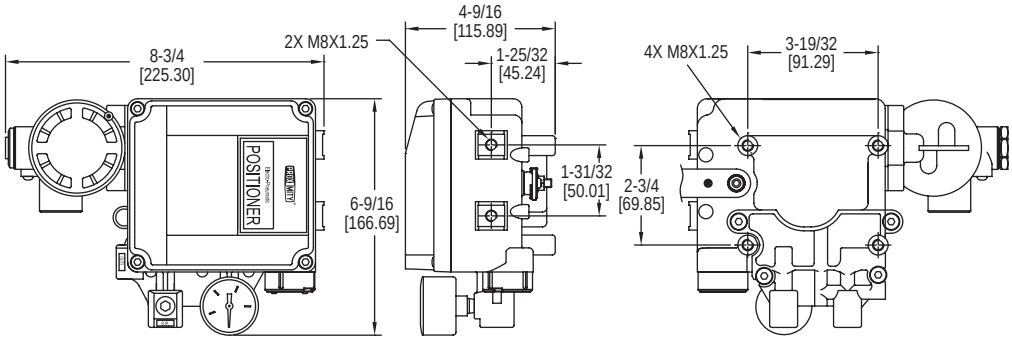

Series 165EL

The **Series 165 PRECISOR® II Pneumatic and Electro-Pneumatic Positioners** deliver stable process control at an exceptionally low price. Its rugged, durable design makes it ideal for harsh environments while maintaining precise, accurate positioning of the control element. Units can be easily changed from direct to reverse action, or vice versa. Low air consumption keeps operating costs at a minimum, while still responding quickly and accurately. Excellent for use in chemical processing, food and beverage, pulp and paper, and pharmaceutical industries, as well as many others.

BENEFITS/FEATURES

- Field selectable cam for direct or reverse acting

APPLICATIONS

Series 165 PRECISOR® II Pneumatic and Electro-Pneumatic Positioners provide excellent modulating control when used between the Dwyer Temperature Controllers, Current to Pressure Transducer, and the Hi-Flow™ Valve in such industries as the food and beverage processing, chemical, pharmaceutical, and wood pulp and paper.

HOW TO ORDER:

1. Select Model No. to specify input control signal.
2. For proper mounting hardware, order according to which actuator the positioner will be mounted to.

MODEL CHART

Model	Input	Enclosure
165NL	3 to 15 psig	Aluminum
165EL	4-20 mA	Aluminum
165EL-SS	4-20 mA	SS

OPTIONS

Description
Valve mount, for factory mounting and calibration to Hi-Flow™ control valves, add suffix to valve model number of positioner. (Does not include valve or positioner piece)
Example: 2004VA32-231-165EL

ACCESSORIES - MOUNTING KITS

Model	For Actuator Models
A-233	220 and 221 air-to-lower
A-234	222 and 223 air-to-lower
A-235	230 and 231 air-to-raise
A-236	233 air-to-raise

SPECIFICATIONS

Input Signal: Pneumatic: 3 to 15 psig (0.2 to 1 bar); Electro-pneumatic: 4-20 mA DC.
Input Impedance: (165EL only): 250 ±15 Ω.
Enclosure Material: Aluminum diecasting or 316 SS.
Air Supply: 20 to 100 psig (1.4 to 6.9 bar).
Air Supply Connection: 1/4″ NPT.
Gage Connection: 1/8″ NPT.
Electrical Connection: Screw terminal.
Conduit Connection: 1/2″ NPT (165EL only).
Linearity: ±0.2% FS.
Hysteresis: 1% FS.
Sensitivity: ±0.2% FS.
Repeatability: ±0.5% FS.
Air Consumption: 0.10 scfm (3 LPM) at 20 psig (1.4 bar) supply.
Flow Capacity: 28 scfm (80 LPM) at 20 psig (1.4 bar) supply.
Stroke: 0.5 to 6″ (10 to 150 mm).
Enclosure Rating: IP66 (NEMA 4X).
Temperature Limits: Aluminum: -4 to 158°F (-20 to 70°C); SS: -40 to 158°F (-40 to 70°C).
Weight: 165NL: 3.1 lb (1.7 kg); 165EL: 6.1 lb (2.7 kg).
Agency Approvals: CE (165EL only).

Filters and Regulators: See page 446

PRECISOR® II PNEUMATIC AND ELECTRO-PNEUMATIC POSITIONERS

Rotary Operation, Field Selectable Cam Design, 316 Stainless Steel Models

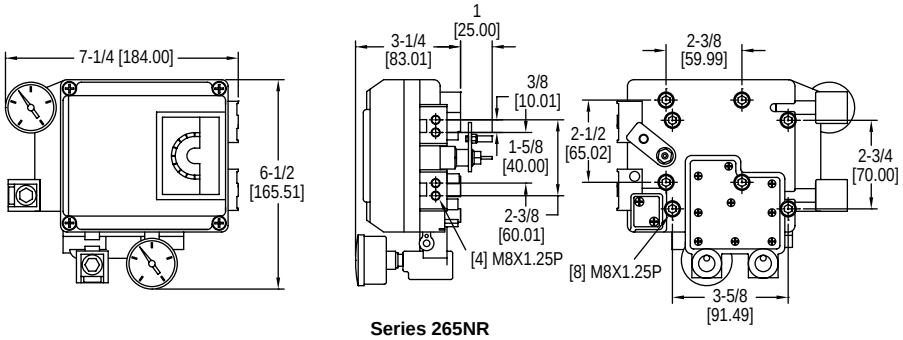

Series 265NR

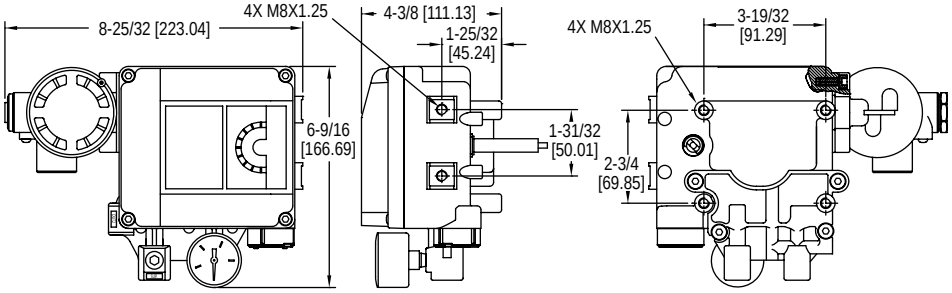

Series 265ER

Proximity **Series 265 Precisor® II Pneumatic and Electro-Pneumatic Positioners** combine outstanding performance with an extremely low price, making it an exceptional value for industrial applications. Rotary valves with single or double acting pneumatic actuators can be precisely controlled, such as our ball and butterfly valves. The Precisor® II positioner proportionally modulates the valve from either an electric 4-20 mA or pneumatic 3 to 15 psig input signal, based on the model chosen and is user-selectable for single or double action. Its rugged, durable design makes it ideal for use in harsh environments, while maintaining precise, accurate positioning of the control elements. Includes a bracket for mounting onto actuators with NAMUR standard connections, and features a versatile linear cam for direct action, reverse action, or split ranges.

BENEFITS/FEATURES

- Field selectable cam for direct or reverse acting
- User selectable for single or double action
- Highly visible indicator for local indication
- IP66 enclosure rating

APPLICATIONS

- Rotary valves with single or double acting pneumatic actuators

SPECIFICATIONS

Input Signal: Pneumatic: 3 to 15 psig (0.2 to 1 bar); Electro-pneumatic: 4-20 mA DC.
Input Impedance: 250 ±15 Ω (265ER only).
Enclosure Material: Aluminum diecasting or 316 SS.
Air Supply: 20 to 101 psig (1.4 to 7.0 bar).
Air Supply Connection: 1/4″ NPT.
Gage Connection: 1/8″ NPT.
Electrical Connection: Screw terminal.
Conduit Connection: 1/2″ NPT (265ER only).
Linearity: ±2% FS.
Hysteresis: 1% FS.
Sensitivity: ±0.5% FS.
Repeatability: ±0.5% FS.
Air Consumption: 0.10 SCFM (3 LPM) at 20 psig (1.4 bar) supply.
Flow Capacity: 28 SCFM (80 LPM) at 20 psig (1.4 bar) supply.
Stroke: 0 to 90°.
Enclosure Rating: IP66.
Temperature Limits: -4 to 158°F (-20 to 70°C).
Weight: 265NR: 3.1 lb (1.7 kg); 265ER: 6.2 lb (2.8 kg).
Compliance: CE (265ER only).

MODEL CHART

Model	Input	Lever Type	Enclosure
265NR-D5	3 to 15 psig	NAMUR	Aluminum
265ER-D5	4-20 mA	NAMUR	Aluminum

ACCESSORIES

Model	Description
A-228	SS steel flex hose, 12″ (30.48 cm) L, 1/8″ male NPT connections
A-332	Brass adaptor, 1/8″ female NPT to 1/4″ male NPT

Pneumatic hosing and fittings
Hosing and fittings for connecting positioners, current to pressure transducers, air filter gauges and other accessories to pneumatic actuated valves.

USA: California Proposition 65
WARNING: This product can expose you to chemicals including Lead, which is known to the State of California to cause cancer and birth defects or other reproductive harm. For more information go to www.P65Warnings.ca.gov.

Filters and Regulators: See page 446

Dwyer

SERIES 185 & 285

LINEAR AND ROTARY SMART POSITIONERS

Fail Freeze, Linear and Rotary Operation, HART® Communication

185

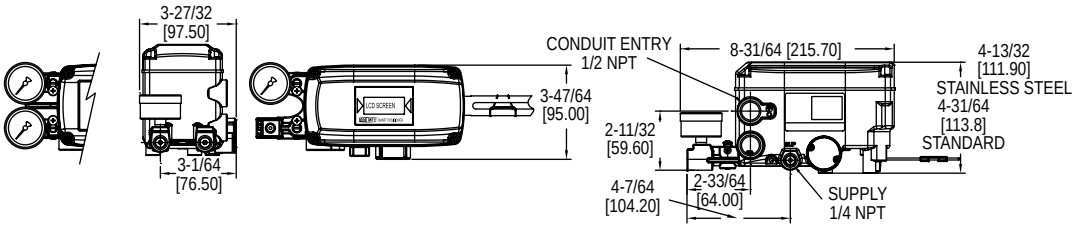

185

285

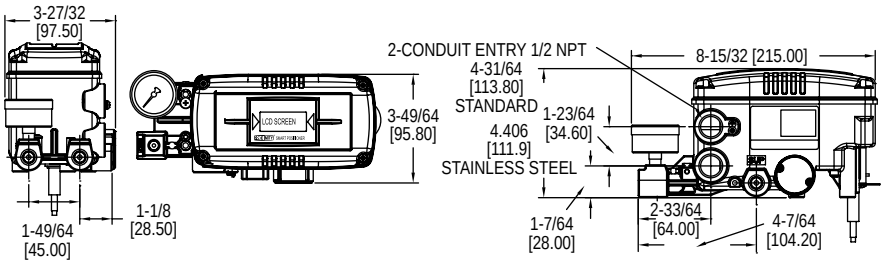

285

VIDEO ONLINE

Proximity **Series 185 & 285 Linear and Rotary Smart Positioners** combine an easy to use, high performance unit with a low price. Series 185 models accurately control the valve stroke of linear motion valves and Series 285 models accurately control the valve stroke of rotary motion valves. An analog feedback signal is outputted to stabilize any valve system, and easy to use functions such as auto calibration ensure the accuracy of the unit. The compact design of this unit makes it easy to use with any size actuator. Smart Positioners feature a LCD screen attached to the outer surface of the unit, allowing for an easy inspection of the positioner condition while in the field. Available in user selectable single or double action, with HART® communication as standard. In the event that the 4-20 mA input signal is lost the 185 and 285 will fail in place.

BENEFITS/FEATURES

- User selectable single or double action
- LCD display

APPLICATIONS

- Linear motion valves or rotary motion valves with single or double acting actuators

SPECIFICATIONS

Input Signal: 4-20 mA DC.
Input Impedance: 460 Ω max @ 20 mA DC.
Enclosure Material: Aluminum or 316 SS.
Air Supply: 35 to 116 psi (2.4 to 8 bar).
Air Connection: 1/4″ NPT.
Gage Connection: 1/8″ NPT.
Conduit Connection: 1/2″ NPT.
Linearity: ±0.5% FS.
Hysteresis: ±0.5% FS.
Sensitivity: ±0.2% FS.
Repeatability: ±0.3% FS.
Air Consumption: .0004 scfm (.01 LPM) at 20 psig (1.4 bar) supply.
Flow Capacity: 2.1 scfm (60 LPM) at 20 psig (1.4 bar) supply.
Stroke: 0.5 to 6″ (10 to 150 mm) or 0 to 90°.
Enclosure Rating: NEMA 4X (IP66).
Temperature Limits: -22 to 185°F (-30 to 85°C).
Weight: 3.3 lb (1.5 kg); SS models: 6.4 lb (2.9 kg).

MODEL CHART

Model	Communication	Enclosure
185EL-S1	HART®	Aluminum
285ER-S5	HART®	Aluminum
285ER-D5	HART®	Aluminum
285ER-S5SS	HART®	SS

HART® is a registered trademark of Fieldcomm Group, Inc.

Regulators: See page 446

Dwyer

SERIES VB

VOLUME BOOSTERS

Economical, 1:1 Ratio

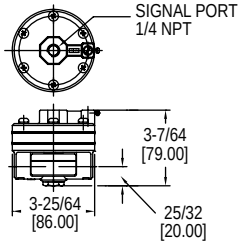

VB-01

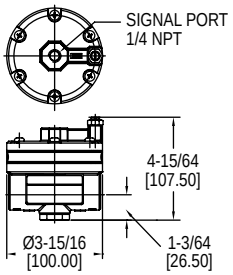

VB-02

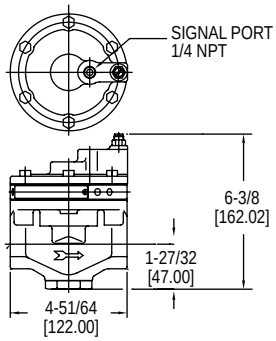

VB-03

The **Series VB Volume Boosters** are a one to one signal to output relay and an ideal solution to increasing valve stroke speed. A large input signal change to the booster delivers high volume for quick throttling control. Volume booster responds to the slightest changes in input signal, which in turn increases accuracy of the output of air pressure to the actuator. This booster receives the positioner's signal output and supplies the proper air pressure to the actuator to reduce response and adjustment time. Available in aluminum or stainless steel.

BENEFITS/FEATURES

- Responds to the slightest change in input signal
- Supplies constant air pressure at a 1:1 ratio

APPLICATIONS

- Used with pneumatic control valves

SPECIFICATIONS

Service: Air only.
Wetted Materials: Body: Aluminum or SS; Diaphragm: Nitrile elastomer.
Max Supply Pressure: 145 psi (10 bar).
Max Signal/Output Pressure: 101.5 psi (7 bar).
Signal Connection: 1/4″ NPT.
In/Output Pressure Ratio: 1:1.
Temperature Limits: -4 to 158°F (-20 to 70°C).
Linearity: ±1% FS.
In/Output Connection: See model chart.
Weight: See model chart.

MODEL CHART

Model	Cv	Weight	In/Out Connection	Construction
VB-01	1.02	1.1 lb (0.5 kg)	1/4″ NPT	Aluminum
VB-01SS	1.02	2.9 lb (1.3 kg)	1/4″ NPT	SS
VB-02	2.32	1.7 lb (0.76 kg)	1/2″ NPT	Aluminum
VB-02SS	2.32	4.2 lb (1.9 kg)	1/2″ NPT	SS
VB-03	4.98	5.1 lb (2.3 kg)	3/4″ NPT	Aluminum
VB-03SS	4.98	11 lb (5 kg)	3/4″ NPT	SS

Dwyer

SERIES MPR

MINIATURE PRESSURE REGULATOR

Air or Water Regulator, Compact and Lightweight, Low Cost

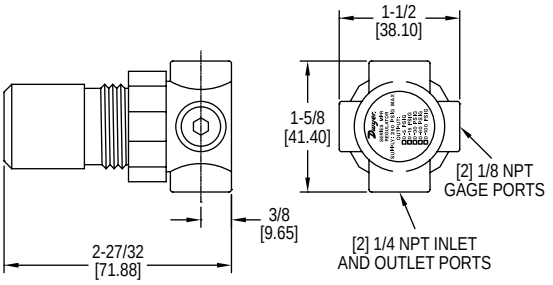

The **Series MPR Miniature Pressure Regulator** is a compact unit that provides low cost, high performance pressure regulation of compressed air or air/water. The low torque, non-rising adjustment knob with locking capability provides easy and precise adjustment. Models for use with air are self relieving. Models for air/water are non-relieving.

BENEFITS/FEATURES

- Low cost
- Easy and precise adjustment
- Compact

APPLICATIONS

- Any industrial application that requires water or air pressure regulations and low cost

SPECIFICATIONS

Service: Compressed air or water.
Wetted Materials: Body: Zinc; Bonnet: Acetal; Diaphragm/seals: Nitrile; Internals: Aluminum, brass, acetal, steel, music wire (MPR2 is plated with electroless nickel for water use).
Maximum Supply Pressure: 250 psig (17.2 bar).
Temperature Limits: 0 to 150°F (-18 to 60°C).
Flow Capacity: 24 SCFM (48 m3/hr) at 100 psig (6.9 bar) supply, 60 psig (4.1 bar) output.
Process Connection: Inlet and outlet: Two 1/4˝ female NPT; Two 1/8˝ female NPT gage ports.
Weight: 4 oz (113 g).

MODEL CHART

Air Model	Air/Water Model	Range
MPR1-0	**MPR2-0**	0 to 5 psi
MPR1-1	**MPR2-1**	0 to 15 psi
MPR1-2	**MPR2-2**	0 to 30 psi
MPR1-3	**MPR2-3**	0 to 60 psi
MPR1-4	**MPR2-4**	0 to 100 psi

ACCESSORIES

Model	Description
MPR-B	Mounting bracket
MPR-N	Panel mounting nut

Filters
page 448

Siphons
pages 449

Gage Guards
page 450

Pressure Snubbers
page 451

Static Pressure Sensors
pages 452-453

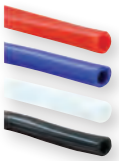
Gage Tubing
page 453

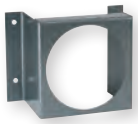
Miscellaneous Accessories
pages 454-455

FEATURED PRODUCTS

STAINLESS STEEL STATIC PRESSURE TIPS

page 452

- Corrosion resistant pressure tips for use in both ducts and rooms provides long service–life
- Kitted to included gasket and screws, eliminates searching for parts and simplifying installation

STATIC PRESSURE PICK-UP

page 453

- Wall plate design provides an effective means to pickup room pressure without exposing sensing elements to damage
- Easy mounting to multitude of wall surfaces permits flexible use and helping to support room designs

Dwyer

MODEL F222 & F451

LIQUID/PARTICLE FILTERS

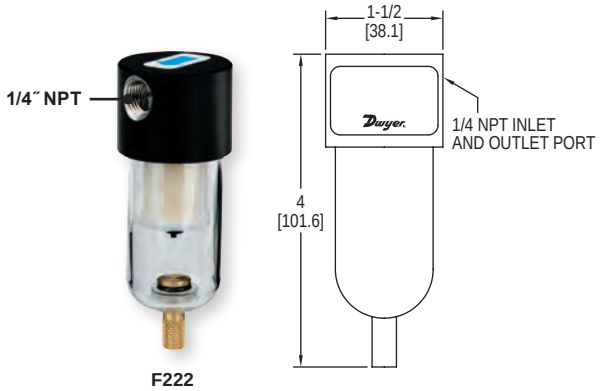

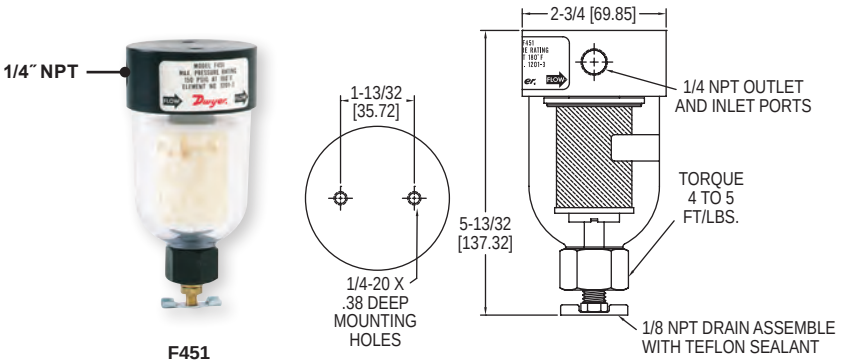

Model F222 & F451 Liquid/Particle Filters protect equipment and instrumentation from harmful contaminant's such as dirt, water and oil. Liquids are continuously coalesced and released through the manual drain valves. Replaceable filter element removes particles and droplets as small as 0.01 micron with 93% efficiency. Units have 1/4˝ female NPT inlet and outlet and manual drain valve.

MODEL CHART	
Model	**Description**
F222	Liquid/particle filter
F451	Liquid/particle filter
1201-3	Replacement filters for F451 (pack of 3)

SPECIFICATIONS
Filtration Efficiency: 93% (removal of 0.01 micron particles).
Maximum Pressure: 150 psig (10 bar).
Maximum Temperature: 130°F (54°C).
Max. Flow at 100 psig: 22 SCFM (F222); 45 SCFM (F451).
Inlet and Outlet Ports: 1/4˝ female NPT.
Mounting: In-line only (F222); 1/4-20 mounting holes (F451).
Materials of Construction: Anodized aluminum head, polycarbonate bowl, cadmium plated steel tie rod, nylon internals, Buna-N seal.
Weight: 0.5 lb (0.2 kg) (F222); 1.1 lb (0.5 kg) (F451).

MODEL F195

DISPOSABLE IN-LINE FILTER

Flowmeter Accessories and Options

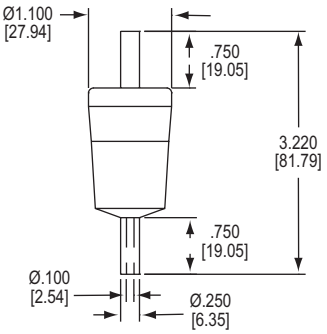

Remove 99.99% of unwanted particles from within your gas flow with the **Model F195 Disposable In-Line Filter**. Encapsulated microfiber filter elements are able to filter particles as small as 0.1 micron. Filters are completely disposable — simply remove the filter from your line and throw it away when it becomes dirty. The transparent nylon housing makes it simple to determine if the filter needs to be changed.

MODEL CHART	
Model	**Description**
F195	Disposable in-line filter

LINE PRESSURE VS. FLOW									
Line Pressure (psig)	1.5	10	20	30	40	60	80	100	125
Gas Flow (scfm)	0.6	0.9	1.3	1.6	2.0	2.7	3.5	4.2	5.7
Note: 1.5 psi pressure drop.									

SPECIFICATIONS
Filtration Efficiency: 99.99% (removal of 0.1 micron particles).
Housing Construction: Nylon.
Filter Tube Dimensions: 0.59 ID x 1.39 L.
Maximum Temperature: 230°F @ 0 psig (110°C @ 0 bar), 120°F @ 125 psig (49°C @ 9 bar).
Maximum Pressure: 125 psig (8.6 bar).
Maximum Differential Pressure: 60 psi (4 bar) (in-to-out flow direction), 20 psi (1.4 bar) (out-to-in flow direction).
Internal Volume: 11.5 cc (11.5 ml).
Connections: Barbed for 1/4˝ ID tubing.

Dwyer

SERIES A-169/A-170

INSTRUMENTATION SIPHONS

Protect Instrumentation in High Temperature Applications

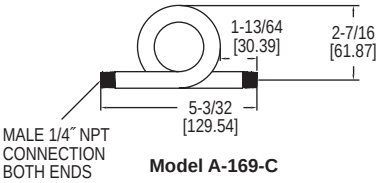

Model A-169-C

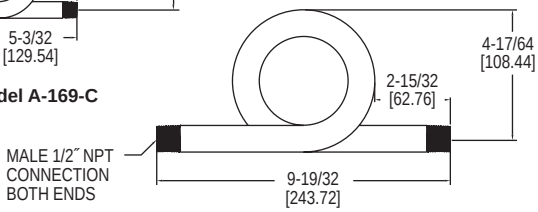

Model A-169-D

***Please see our website for additional dimensional drawings.**

The **Series A-169/A-170 Instrumentation Siphons** protect pressure instruments in high temperature applications. Water held in the 180° coil prevents steam from contacting the instrument. Constructed in either carbon steel or 316 stainless steel, the instrumentation siphons can withstand high temperature, pressure, or resistance to corrosion. They are ideal for use with pressure gages and instrumentation where the process media temperature exceeds the rating of the instrument. The male NPT connection allows for easy installation and secure attachment.

BENEFITS/FEATURES

- Carbon steel construction
- MNPT connection allowing for easy installation
- Stainless steel construction

APPLICATIONS

- HVAC
- Industrial process

SPECIFICATIONS
Service: Compatible liquids and gases.
Wetted Materials: Carbon steel or 316 SS (depending on model).
Pressure Limits: See chart.
Temperature Limits: See chart.
Process Connections: See chart.
Weight: 1/4″ NPT models: 8 oz (226.8g); 1/2″ NPT models: 25.6 oz (725.75 g).

MODEL CHART

Model	Process Connections	Material	Pressure Limit
A-169-C	1/4″ NPT male	Carbon steel SCH 80	500 psi @ 680°F
A-169-D	1/2″ NPT male	Carbon steel SCH 80	500 psi @ 680°F
A-170*	1/4″ NPT male	316 SS SCH 80	2307 psi @ 200°F
A-170-A	1/4″ NPT male	316 SS SCH 40	500 psi @ 680°F
A-170-B	1/2″ NPT male	316 SS SCH 40	500 psi @ 680°F

*Model A-170 is not RoHS certified.

Dwyer

SERIES GG

GAGE GUARD

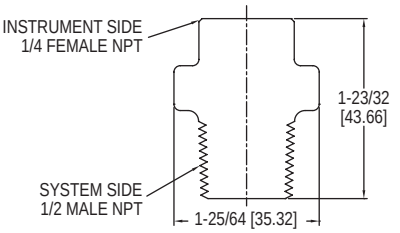

Protecting pressure or vacuum instruments from clogging, corrosion, or damage, the **Series GG Gage Guard** provides a protective barrier between the process fluid and the instrument. The hermetically-sealed uni-body protects from the possibility of leaking. Glass-filled Polypropylene housing is suitable for most inorganic chemicals and temperatures up to 185°F (85°C). A fluid fill station is recommended for proper installation.

SPECIFICATIONS

Maximum Pressure: Liquids: 160 psi (11 bar) @ 70 to 185°F (21 to 85°C); Gases: 100 psi (6.9 bar) @ 70 to 100°F (21 to 38°C) and 30 psi (2.1 bar) @ 100 to 185°F (38 to 85°C).
Accuracy: ±4%.
Maximum Temperature: 185°F (85°C).
Wetted Parts: Glass-filled polypropylene housing, Buna-N or fluoroelastomer diaphragm.
Dimensions: 1/4″ female NPT instrument side; 1/2″ male NPT system side; 1-3/8″ (35 mm) diameter.

MODEL CHART

Model	Description
GG1	Buna-N diaphragm
GG2	Fluoroelastomer diaphragm

Dwyer

SERIES PS

PRESSURE SNUBBER

Dampens Surges, Protects Pressure Instrumentation

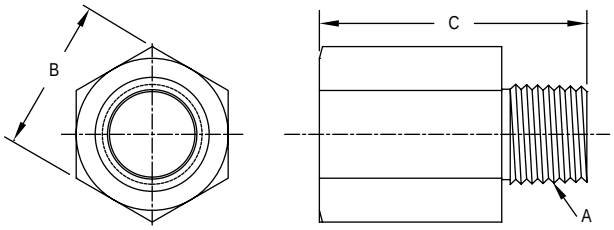

DIMENSIONS			
Model	**A**	**B**	**C**
PS114	1/8″ NPT	1/2″	1-7/64″
PS214	1/8″ NPT	1/2″	1-7/64″
PS122	1/4″ NPT	3/4″	1-1/2″
PS124	1/4″ NPT	3/4″	1-1/2″
PS222	1/4″ NPT	3/4″	1-1/2″
PS224	1/4″ NPT	3/4″	1-1/2″
PS225	1/4″ NPT	3/4″	1-1/2″

The **Series PS Pressure Snubber** is designed to protect pressure instrumentation by dampening surges and pulsations and assuring steady average pressure readings. Snubbers are available in a variety of pore sizes for use with gases, water, and oils.

SPECIFICATIONS
Maximum Pressure: Brass: 10,000 psi (689 bar), SS: 15,000 psi (1034 bar).
Filter Disc Material: AISI 316 SS.
Approx. Micron Rating: Air and gases: 2-5µ; water and oils (30-225 SSU): 10µ.
Dimensions: 1/4″ NPT: 3/4″ (19 mm) hex size, 1.5″ (38 mm) length.

MODEL CHART		
Model	**Service**	**Construction**
PS114	Air and gases	Brass 1/8″ NPT
PS214	Air and gases	SS 1/8″ NPT
PS122	Water and oils	Brass 1/4″ NPT
PS124	Air and gases	Brass 1/4″ NPT
PS222	Water and oils	SS 1/4″ NPT
PS224	Air and gases	SS 1/4″ NPT
PS225	Pulsating gas	SS 1/4″ NPT

USA: California Proposition 65
WARNING: This product can expose you to chemicals including Lead, which is known to the State of California to cause cancer and birth defects or other reproductive harm. For more information go to www.P65Warnings.ca.gov.

ADJUSTABLE PRESSURE SNUBBERS

Protect Instruments from Pressure Spikes or Fluid Hammer

Brass

316 SS

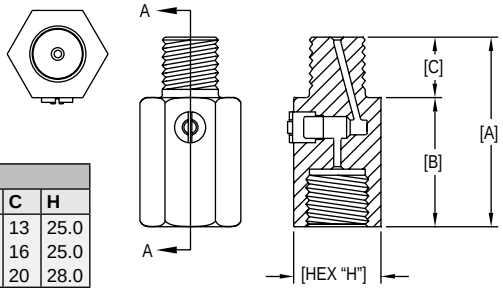

DIMENSIONS				
Connections	**A**	**B**	**C**	**H**
1/4″ M x F	55	42	13	25.0
3/8″ M x F	60	44	16	25.0
1/2″ M x F	60	40	20	28.0

The **Adjustable Pressure Snubbers** protect pressure instruments against fluctuations, surges, spikes and fluid hammer. The fine thread adjustable valve allows you to fine tune harmful harmonic vibration from the fluid systems and isolate the instrument from process when service or replacement is necessary. These Pressure Snubbers are designed to provide fully field adjustable dampening. By using our Adjustable Pressure Snubbers, you will alleviate surges and pulsations to assure steady pressure readings and extend the life of your instrument.

SPECIFICATIONS
Service: Compatible liquids and gases.
Wetted Parts: Brass or 316 SS.
Pressure Limits: 5690 psi (392 bar).
Temperature Limits: -4 to 302°F (-20 to 150°C).
Process Connections: See chart.
Weight: 8.4 oz (238 g).

MODEL CHART					
Model	**Material**	**Connections**	**Model**	**Material**	**Connections**
A-251	Brass	1/4″ male/female BSPP	**A-257**	316 SS	1/4″ male/female BSPP
A-252	Brass	3/8″ male/female BSPP	**A-258**	316 SS	3/8″ male/female BSPP
A-253	Brass	1/2″ male/female BSPP	**A-259**	316 SS	1/2″ male/female BSPP
A-254	Brass	1/4″ male/female NPT	**A-260**	316 SS	1/4″ male/female NPT
A-255	Brass	3/8″ male/female NPT	**A-261**	316 SS	3/8″ male/female NPT
A-256	Brass	1/2″ male/female NPT	**A-262**	316 SS	1/2″ male/female NPT

USA: California Proposition 65
WARNING: This product can expose you to chemicals including Lead, which is known to the State of California to cause cancer and birth defects or other reproductive harm. For more information go to www.P65Warnings.ca.gov.

Dwyer

STATIC PRESSURE TIPS

A-302F-A

A-302F-B

A-302F-C

A-489 (4˝)

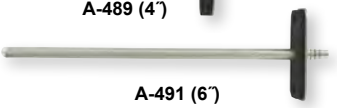
A-491 (6˝)

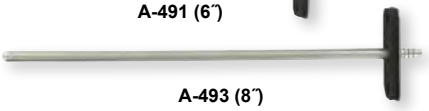
A-493 (8˝)

Flange view

A-305

A-307

A-308

A-301

A-302

A-303

A-414

A-306-A

MODEL CHART	
Model	**Description**
The stainless steel static pressure tips are used to measure static pressures in ducts or rooms. They are to be connected to differential pressure switches and transmitters. Two static sensors are used in applications where differential pressure is required across a filter or coil. These sensors include a mounting flange with integral rubber gasket and two screws for simplifying mounting on a duct.	
A-302F-A	4˝ hook style SS static pressure tip with mounting flange
A-302F-B	6˝ hook style SS static pressure tip with mounting flange
A-302F-C	8˝ hook style SS static pressure tip with mounting flange
A-489	4˝ straight SS static pressure tip with mounting flange
A-491	6˝ straight SS static pressure tip with mounting flange
A-493	8˝ straight SS static pressure tip with mounting flange
Designed for simplified installation, these are easy to install, inexpensive, and provides accurate static pressure sensing in smooth air at velocities up to 1500 FPM.	
A-307	Static pressure fitting, for 1/4˝ metal tubing connection
A-307-SS	SS static pressure fitting, for 1/4˝ metal tubing connection
A-308	Static pressure fitting, for 3/16˝ and 1/8˝ ID plastic or rubber tubing
A-414	SS clean room pressure sensor
These static pressure tips are ideal for applications such as sensing the static pressure drop across industrial air filters and refrigerant coils. Here the probability of air turbulence requires that the pressure sensing openings be located away from the duct walls to minimize impingement and aspiration, and thus ensure accurate readings. For a permanent installation of this type, the Dwyer No. A-301 or A-302 static pressure tip is used. It senses static pressure through radially-drilled holes near the tip and can be used in air flow velocities up to 12,000 FPM. The angled tips shown have 4˝ insertion depth. Each has four radially drilled .040˝ sensing holes. All except Model A-303 mount in 3/8˝ hole in duct. For portable use, a magnet holds No. A-303 in place.	
A-301	Static pressure tip, for 1/4˝ metal tubing connection
A-301-A	Static pressure tip, same as A-301 with 6˝ insertion depth
A-301-B	Static pressure tip, same as A-301 with 8˝ insertion depth
A-301-C	Static pressure tip, same as A-301 with 12˝ insertion depth
A-301-SS	SS static pressure tip, for 1/4˝ metal tubing connection
A-302	Static pressure tip, for 3/16˝ and 1/8˝ ID plastic or rubber tubing
A-302-A	Static pressure tip, same as A-302 with 6˝ insertion depth
A-303	Portable static pressure tip, for 3/16˝ ID rubber or plastic tubing with 4˝ insertion
A-305 low resistance static pressure tip is designed for use in dust-laden air and for rapid response applications. It is recommended where a very low actuation pressure is required for a pressure switch or indicating gage — or where response time is critical.	
A-305	Static pressure tip, low resistance application, furnished with two (2) hex jam nuts and two (2) mounting washers for duct mounting and with 1/8˝ NPT pipe thread for pressure connection
A-305-SS	SS static pressure tip, low resistance application, furnished with two (2) hex jam nuts and two (2) mounting washers for duct mounting and with 1/8˝ NPT pipe thread for pressure connection
A-306	Outdoor static pressure sensor. Provides average outdoor pressure signal for reference in building pressurization applications. Includes sensor, 50´ vinyl tubing, mounting bracket and hardware. Red sensor
A-306-A	Outdoor static pressure sensor. Provides average outdoor pressure signal for reference in building pressurization applications. Includes sensor, 50´ vinyl tubing, mounting bracket and hardware. Gray sensor

USA: California Proposition 65
⚠**WARNING:** This product can expose you to chemicals including Lead, which is known to the State of California to cause cancer and birth defects or other reproductive harm. For more information go to www.P65Warnings.ca.gov.

STATIC PRESSURE ACCESSORIES

A-465

A-417A ++

A-418E

A-418N

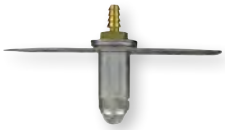
A-419A

A-420A

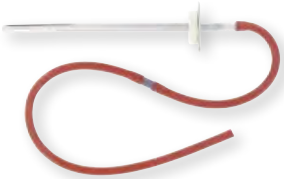
A-421

Surge damper

MODEL CHART	
Model	**Description**
A-465	Static pressure pick-up provides a clean solution for sensing space pressure. The sensor can be mounted on sheetrock walls, single gang electrical boxes, or on ceiling tiles. Molded from ABS plastic, the A-465 provides an integral barb fitting and includes tubing, mounting screws and anchors.
A-417A	Static pressure pickup. For use in clean rooms, 60 micron filter picks up static pressure. Stainless steel wall plate fits 2″ x 4″ electrical box. Sealed with foam gasket, screws included. Barbed brass fitting holds 1/8″ to 3/16″ ID tubing.
A-418E	Static pressure pickup. Room mount with plastic enclosure fits 2″ x 4″ electrical box. Fine mesh screen hides static pressure pickup port. Clean connection to 1/8″ to 3/16″ ID tubing and pressure sensor. Sealed with foam gasket, screws included.
A-418N	Static pressure pickup. Room mount with plastic enclosure fits 2″ x 4″ electrical box. Fine mesh screen hides static pressure pickup port. Clean connection to 1/8″ to 3/16″ ID tubing and pressure sensor. Sealed with foam gasket, screws included.
A-419A	Static pressure pickup ceiling mount. Plate rests on top of standard 3/4″ thick ceiling tile while 60 micron filter faces down through 5/8″ hole in tile. Filter is barely noticeable in room being monitored. Unit mounts to junction box. Barbed brass fitting holds 1/8″ to 3/16″ ID tubing.
A-420A	Static pressure pickup for roof or outside mount. Reduces effects of wind gusts to keep pressure readings stable when plate is parallel to ground. Structure withstands harsh environmental elements. Structure is 3-1/4″ across and 2-3/8″ deep. EMT Conduit fitting is 1/2″. Pressure connection is brass barbed fitting for 1/8″ and 3/16″ ID tubing.
A-421	Static pressure tip measures duct static air pressure. Assembly includes 6″ probe, silicon rubber hose, and screws. Built-in surge damper ensures stable readings on pressure sensor. Pressure spike reducer can be added to end of tube to further smooth over pressure fluctuations.

++USA: California Proposition 65
WARNING: This product can expose you to chemicals including Lead, which is known to the State of California to cause cancer and birth defects or other reproductive harm. For more information go to www.P65Warnings.ca.gov.

GAGE TUBING ACCESSORIES

A-200-1/A-200-2

A-201/A-202

A-203

A-220

A-221

A-222

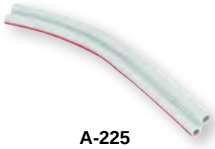
A-225

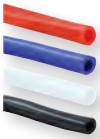
A-204-A/A-204-B/A-204-C/A-204-D

A-223

A-223P-1/A-223P-2

A-210/A-211

MODEL CHART	
Model	**Description**
Norprene® tubing is useful in a wide range of temperatures from -75 to 275°F (-60 to 135°C) and will not weaken after long term exposure to heat and ozone.	
A-200-1 **A-200-2**	3/16″ ID x 5/16″ OD, 13 psi maximum pressure @ 73°F (90 kPa @ 23°C); 50´ 1/4″ ID x 3/8″ OD, 10 psi maximum pressure @ 73°F (69 kPa @ 23°C); 50´
Rubber latex tubing has less tendency to kink in storage and occupies less space, thus is best for portable work.	
A-201 **A-202**	3/16″ ID, 9´ length 3/16″ ID, lengths to 50´
Clear PVC tubing is easily inspected and is therefore best for test applications where a possibility of fluid entering the tubing exists.	
A-203	1/8″ ID x 1/4″ OD, lengths to 100´; 60 psi max. pressure @ 73°F (22°C)
Clear flexible vinyl tubing is easily inspected, and is therefore best for test applications where a possibility of fluid entering the tubing exists.	
A-220 **A-221** **A-222**	3/16″ ID x 5/16″ OD, lengths to 500´; 45 psi maximum pressure @ 73°F (310 kPa @ 23°C) 1/8″ ID x 3/16″ OD, lengths to 500´; 40 psi maximum pressure @ 165°F (276 kPa @ 74°C) .240″ ID x .375″ OD, lengths to 500´; 35 psi maximum pressure @ 73°F (240 kPa @ 23°C)
Flexible double column plastic tubing is used with Mark II manometers and the Wind Speed Indicator. Light gray with red color code stripe.	
A-225	1/8″ ID, lengths to 750´
Flexible colored vinyl tubing is quickly distinguishable in applications where more than one line is required aiding installation.	
A-204-B **A-204-C** **A-204-D**	3/16″ ID x 5/16″ OD, lengths to 500´; 45 psi maximum pressure @ 165°F (310 kPa @ 74°C); Opaque blue 3/16″ ID x 5/16″ OD, lengths to 500´; 45 psi maximum pressure @ 165°F (310 kPa @ 74°C); Opaque white 3/16″ ID x 5/16″ OD, lengths to 500´; 45 psi maximum pressure @ 165°F (310 kPa @ 74°C); Opaque black
Black polyethylene tubing offers long life, great stability and resistance to corrosion.	
A-223	1/8″ ID x 1/4″ OD, 10´ length; 200 psi maximum @ 140°F (1379 kPa @ 60°C)
Black nylon tubing is recommended for high temperature and pressure applications. -40 to 248°F (-40 to 120°C).	
Black plenum fire retardent polyethylene tubing meets NFPA standard 90A for installation in air-conditioning and ventilating plenum spaces; also used in building automation systems. Lengths to 500´, 100 psig maximum pressure @ 75°F (689 kPa @ 24°C).	
A-223P-1 **A-223P-2**	.17″ ID x .25″ OD 1/4″ ID x 3/8″ OD
Aluminum tubing is recommended for permanent installations.	
A-210 **A-211**	1/4″ OD, 5´ length, 500 psi maximum pressure @ 200°F (3447 kPa @ 93°C) 1/4″ OD, 50´ length, 500 psi maximum pressure @ 200°F (3447 kPa @ 93°C)

Norprene® is a registered trademark of Saint-Gobain Abrasives, Inc. Corporation

Dwyer

ACCESSORIES - FITTINGS AND FILTERS

A-324 ++

A-326 ++

A-327/A-328

A-329 ++

A-330

A-331

A-332 ++

A-333 ++

A-334 ++

A-336 ++

A-337 ++

A-338 ++

A-339 ++

A-340

A-342

A-345

A-346 ++

A-349 ++

A-391

A-392

A-398 ++

MODEL CHART	
Model	**Description**
A-323	Elbow compression fitting, brass 1/8″ NPT to 1/4″ metal tubing
A-324	Compression fitting, brass 1/8″ NPT to 1/4″ metal tubing
A-326	Compression fitting, brass 1/8″ NPT to 3/8″ tubing
A-327	5/16″ nylon tube union
A-328	1/4″ nylon tube union
A-329	1/8″ NPT close coupled street ell, brass
A-330	1/8″ pipe plug, socket hex, plated steel
A-331	1/8″ NPT filter vent plug, nylon and sintered metal
A-331-SS	1/8″ BSPT 316 SS filter vent plug (replacement filter for A-464-SS)
A-332	Bushing, brass, 1/8″ to 1/4″ NPT
A-333	Bushing, brass, 1/8″ to 1/2″ NPT
A-334	Close nipple, brass, 1/8″ NPT
A-336	90° street L, brass, 1/8″ NPT
A-337	Coupling, brass, 1/8″ NPT
A-338	Servel adaptor, brass 3/8″ and 5/16″ N.F. threads for gas appliances to 1/8″ and 3/16″ ID rubber or plastic tubing
A-339	Adaptor, brass, 1/8″ NPT to 3/16″ rubber and 1/8″ ID plastic tubing
A-339-SS	316 SS 3/16″ hose barb to 1/8″ BSPT fitting
A-340	Adaptor, nylon, 1/8″ NPT to 3/16″ ID rubber or 1/4″ plastic tubing
A-342	“T” assembly, plastic, for 3/16″ ID rubber or 1/4″ plastic tubing
A-343	“T” assembly, plastic, for 3/16″ plastic tubing
A-343-1	“T” assembly, plastic, for 1/8″ ID plastic tubing
A-344	Terminal tube, brass 1/4″ diameter tube, 8″ L (not shown)
A-345	Flange, aluminum with gasket and sheet metal screws, 1/8″ NPT
A-346	“T” compression fitting, brass, 1/4″ metal tubing
A-349	Reducer, brass, 1/4″ female NPT to 1/8″ male NPT
A-385	1/2″ plastic hole plugs 20/bag
A-391	Line filter for Capsuhelic® gage,1/4″ female NPT X 1/4″ male NPT
A-392	Line filter for Magnehelic® gage, 1/8″ female NPT x 1/8″ male NPT
A-398	Probe extension adaptor for series 640 air velocity transmitter, brass, 1/2″ female NPT x 5/16″ compression

++USA: California Proposition 65
WARNING: This product can expose you to chemicals including Lead, which is known to the State of California to cause cancer and birth defects or other reproductive harm. For more information go to www.P65Warnings.ca.gov.

ACCESSORIES - VALVES AND CONNECTORS

A-310A/A-310B ++

A-311 ++

A-312 ++

A-5000

A-355

A-365

MODEL CHART	
Instrument valves for permanent installation. They mount in part A-316, A-317, type C manometer connections or Magnehelic® gage and connect to metal tubing or 1/8″ pipe.	
Model	**Description**
A-310A	3-way vent valve, plastic, 1/8″ NPT to 1/4″ metal tubing. Positions are: (1) Line: Gage connected to pressure source. (2) Off: Both gage and connection to pressure source closed. (3) Vent: Gage vented to atmosphere and connection to pressure source closed. 80 psi rating. Replaces former model A310 (brass)
A-310B	Same as A-310A but with 10 psi rating
A-311	Shut off valve, brass, 1/8″ NPT to 1/8″ NPT
A-312	Shut off valve, brass, 1/8″ NPT to 1/4″ metal tubing
A-5003-5	PVC 1/8″ male NPT inlet x 1/8″ female NPT outlet x 1/8″ female NPT outlet (125 psi maximum)
A-5004-4	PVC 1/4″ female NPT inlet x 1/4″ female NPT outlet x 1/4″ female NPT outlet (125 psi maximum)
A-355	Porting valve, acrylic plastic, 1/8″ NPT inserts. Used for convenient indication of pressure at two points with a single gage
A-365	Dual porting valve, acrylic plastic, 1/8″ NPT fittings. For monitoring three pressures, two at a time, with one gage

A-315

A-316

A-317

A-318

A-319

A-321 ++

A-322

MODEL CHART	
Gage Connectors for Manometers. Molded nylon construction, threaded .786 x 27 N.S., with O-ring seal.	
Model	**Description**
A-315	Gage connector, shut off type, for 3/16″ rubber tubing
A-316	Gage connector, bushing, 1/8″ pipe thread opening
A-317	Gage connector, 1/8″ pipe thread opening, less OD thd., for slip fit in 3/4″ dia. opening in 250 series A.F. gages
A-318	Gage connector 1/4″ pipe thread opening
A-319	Flexible red P.V.C. connector, 3/16″ ID rubber tubing to 1/4″ ID plastic tube for 1221,1222 and 1227 manometers
A-321	Brass safety relief valve protects Magnehelic® or Photohelic® gage against over pressure due to regulator failure etc. Opens at 10 psi. Mounts in tee fitting in sensing line or in unused gage port with addition of A-349 reducer. 1/4″ male NPT (Use two for D.P. application)
A-322	Gage connector for 1/4″ tubing. Slip fits in 3/4″ opening in 250 series A.F. gages (compression nut and ferrule not included)

++USA: California Proposition 65
WARNING: This product can expose you to chemicals including Lead, which is known to the State of California to cause cancer and birth defects or other reproductive harm. For more information go to www.P65Warnings.ca.gov.

ACCESSORIES - GAGE FLUIDS

A-101 A-102 A-103 A-104

MODEL CHART	
Model	**Description**
Red gage fluid, .826 sp. gr. The standard fluid for use in inclined manometers, "D" type vertical manometers and all Dwyer gages using red fluid.	
A-101	1 oz unbreakable plastic dispenser bottle
A-102	4 oz plastic bottle with screw cap
A-103	1 pt plastic bottle with screw cap
A-104	1 qt plastic bottle with screw cap
Blue gage fluid, 1.910 sp. gr. For special instruments and Mark II Models 26 and 28.	
A-110	1 oz unbreakable plastic dispenser bottle
Violet gage fluid, 1.000 sp. gr. Use in place of water if better meniscus is desired.	
A-120	1 oz unbreakable plastic dispenser bottle
A-122	1 pt plastic bottle with screw cap
Fluorescein green color concentrate, water coloring agent. Not to be used full strength. Add 3/4 oz to a quart of distilled water. Contains a wetting agent to improve the meniscus characteristics. Use in vertical manometers only.	
A-126	1 oz unbreakable plastic dispenser bottle
Caution: Use only Dwyer fluids in Dwyer gages.	

ACCESSORIES - MISCELLANEOUS

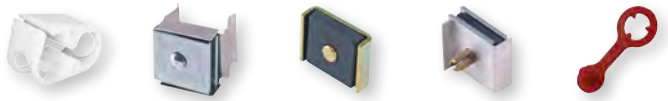

A-351 A-352 A-353 A-354 A-356

A-357 A-363 A-364 A-366 A-397

A-464 A-465 A-362 A-368 A-369

A-370 A-371 A-395 A-497 A-300

A-360

MODEL CHART	
Model	**Description**
A-298	Flat aluminum bracket for flush mounting Capsuhelic® gage, 603A, 605, and 3000MR
A-299	Mounting bracket, flush mount Magnehelic® gage in bracket, bracket is then surface mounted, steel with gray hammertone epoxy finish
A-300	Flat aluminum bracket for flush mounting Magnehelic® gage
A-351	Pinch clamp to seal rubber tubing, as in a leakage test
A-352	Magneclip, slip on magnetic holder for acrylic plastic gages, per pair
A-353	Magnetic mounting, flat style, secures to flowmeter, etc. with 6-32 machine screw and boots insert
A-354	Magnetic mounting, edge style, secures edge of acrylic manometer with 10-32 machine screw and boots insert
A-356	Gage plug with retainer loop, polyethylene plastic, for 1/4″ ID tubing, slip loop over tubing OD and insert plug for seal
A-357	Thermometer and terminal tube holder, SS wire
A-360	Aluminum DIN rail, 1 m
A-362	Stand-hang bracket, aluminum, for Minihelic® II gage
A-363	Scale clamp bar for 1221 manometer
A-364	Magnet assembly for 1222 manometers, 2 required (3 required for 1222-36 and M-1000)
A-366	Manometer cleaning brush 1/4″ OD x 2-1/8″ long, attach to wire for use
A-368	Surface mounting plate, aluminum, for Magnehelic® gage
A-369	Stand-hang bracket, aluminum, for Magnehelic® gage
A-370	Mounting bracket, flush mount Capsuhelic® gage or Series 631B transmitter in bracket, bracket is then surface mounted, steel with gray hammertone epoxy finish
A-371	Surface mounting bracket, use with Photohelic® gage on horizontal or vertical surfaces, also for Capsu-Photohelic® gages on vertical only
A-397	Rugged step drill quickly provides true round holes in thin materials, ideal for installation of Dwyer pitot tubes in sheet metal duct, no centerpunch needed to steel, drills 3/16″ through 1/2″ holes in 1/16″ increments
A-464	Flush mount kit for Magnehelic® gages
A-464-SS	Stainless steel flush mount kit for Magnehelic® gage
A-465	Flush mount space pressure sensor
A-497	Surface mounting bracket for Minihelic® II gage, steel with satin black finish

ACCESSORIES - KITS FOR AIR FILTER SWITCHES

A-602 A-603 A-604

MODEL CHART	
Model	**Description**
A-602	Air filter kit, accessory package for using switch without a gage includes two pressure tips with integral compression fittings, two 5′ lengths of 1/4″ aluminum tubing and two 1/8″ NPT to 1/4″ tubing compression fittings
A-603	″T″ kit, accessory package for using pressure switch in conjunction with an air filter kit equipped Magnehelic® or Series 250 AF gages includes two 1/8″ NPT to 1/4″ tubing compression fittings and two compression tees
A-604	″T″ kit, accessory package for using pressure switch in conjunction with Mark II gages, includes two plastic tubing connector tees and two plastic tubing to 1/8″ NPT adapters

USA: California Proposition 65
⚠ **WARNING:** This product can exposure to chemicals including Lead, which is known to the State of California to cause cancer and birth defects or other reproductive harm. For more information go to www.P65Warnings.ca.gov

Absolute Pressure (psia): The total force per unit area exerted by a fluid. The sum of atmospheric and gage pressures.

Accuracy: The degree to which an observed value matches the actual value of a measurement over a specified range.

Alternating Current (AC): Current that reverses polarity at a uniform frequency.

ANSI: The American National Standards Institute is a private nonprofit organization that oversees the development of voluntary consensus standards for products, services, processes, systems, and personnel in the United States.

ASTM: (Formerly known as The American Society for Testing and Materials) An international standards developing organization that develops and publishes voluntary technical standards for a wide range of materials, products, systems, and services.

Atmospheric Pressure: The force exerted per unit area by the weight of the atmosphere.

British Thermal Unit (BTU): The amount of heat required to raise the temperature of one pound of water by one degree Fahrenheit. Melting a pound of ice at 32°F requires 143 BTU.

BSPT: British Standard Pipe Thread.

Capacitance: A measure of the amount of electric charge stored (or separated) for a given electric potential. The most common form of charge storage device is a two-plate capacitor.

Cavitation: The process where vapor bubbles in a flowing liquid collapse inside a control valve as the pressure begins to increase.

Closed Loop: A control system that provides feedback to a controller on the state of the process variable.

Cold Junction: The end of thermocouple that is kept at a constant temperature in order to provide a reference point.

Contacts: Elements used to mechanically make or break an electric circuit.

Critical Pressure: The ratio of upstream to downstream pressure where the gas velocity out of the valve is sonic and further decreases in downstream pressure no longer increase the flow.

Cv or Valve Flow Coefficient: The number of US gallons per minute of water at 60°F that will pass through the valve with a pressure drop of 1 psi.

Deadband: The value of measurement between when a switch actuates and deactuates.

Density: The mass of a given substance per unit volume.

Derivative Control: A method of changing the output of a controller in proportion to the rate of change of the process variable.

Dewpoint: The temperature to which air must be cooled for the air to be saturated with water.

Dielectric: The insulating material between the conductors of a capacitor.

Dielectric Constant: The ratio of the insulating ability of a material to the insulating ability of vacuum.

DIN: Deutsches Institut für Normung e.V., The German national organization for standardization and is that country's ISO member body. DIN and mini-DIN connectors, as well as DIN rails are several examples of older DIN standards that are today used around the world.

Direct Current (DC): A current with a constant polarity.

Double Pole Double Throw (DPDT) Switch: Two separate switches that operate simultaneously, each with a normally open and a normally closed contact and a common connection.

Drift: A gradual change in an element over time when the process conditions are constant.

Dry Bulb Temperature: The ambient air temperature measured by a thermometer that is freely exposed to the air but shielded from other heating or cooling effects.

Emissivity: The ratio of energy radiated by the material to energy radiated by a black body at the same temperature. It is a measure of a material's ability to absorb and radiate energy.

Form-C Contact: A contact that has both normally open and normally closed contacts.

Fuzzy Logic: A system that uses mathematical or computational reasoning based on fuzzy sets derived from analog inputs.

Gage Pressure (psig): The measure of force per area exerted by a fluid using atmospheric pressure as the zero reference.

Gain: The ratio of change in output to the change in input of a process.

Hot Junction: The joined end of the thermocouple that is exposed to the process where the temperature measurement is desired.

Humidity: The amount of water vapor in a given volume of air or gas.

Hydrostatic Pressure: The pressure due to the head of a liquid column.

Hysteresis: A property of a device or instrument whereby it gives different output values in relation to its input values, depending on the directional sequence in which the input values have been applied. [IEC 61298-2]

Impedance: The opposition in an electric circuit to the flow of an alternating current consisting of inductive reactance, ohmic resistance and capacitive reactance.

Inaccuracy: Maximum positive and negative deviation from the specified characteristic curve observed in testing a device under specified conditions and by a specified procedure. [IEC 61298-2]

Note 1: Accuracy is defined in IEC 60050-300, definition 311-06-08.
Note 2: The term inaccuracy is sometimes referred to as measured accuracy. This term should not be used.

Inductive Load: Current passing through wound or coiled wire creates a magnetic field that in turn produces mechanical work.

Integral Control: A method of changing the output of a controller by an amount proportional to the error and the duration of that error.

Laminar Flow: Smooth fluid flow that has a parabolic flow profile with no mixing between streamlines.

Linearity: Ability of a measuring instrument to provide an indication having a linear relationship with a defined quantity other than an influence quantity. [IEC 60050-300]

Note: The method of expression of lack of linearity is different for different kinds of instruments and is established in each particular instance.

Long-Term Span Drift: The amount of change of a measured reading with 90% of full scale range pressure applied and constant ambient conditions over a given period of time which is typically quoted as an annual figure. [IEC 61298-2]

Long-Term Zero Drift: The amount of change of a measured reading with zero pressure applied and constant ambient conditions over a given period of time which is typically quoted as an annual figure.

Low Pressure Steam: As defined by ASME, steam under 15 psi pressure.

Manual Reset: A control that must have human input before it will return to its normal state from an alarm state.

Maximum Surge Pressure: Safe pressure for the switch housing but which may damage the mechanism by continuous or repetitive application.

NEMA: The National Electrical Manufacturers Association, a trade association in the US of electrical equipment manufacturers that develops many industry technical standards, such as the standard for electrical equipment enclosures.

NIST: The National Institute of Standards and Technology, is a non-regulatory agency of the United States Department of Commerce's Technology Administration. The institute provides standard references and calibration services.

Non-Linearity: Deviation from linearity. [IEC 61298-2]

Note 1: Linearity is defined in IEC 60050(300), definition 311-06-05.
Note 2: Non-linearity does not include hysteresis.

Non-Repeatability: Deviation from repeatability. [IEC 61298-2]

Note 3: Repeatability is defined in IEC 60050(300), definition 311-06-06.

Normally Closed Switch: A switch in which the contacts are normally closed. Actuation opens the contact.

Normally Open Switch: A switch in which the contacts are normally open. Actuation closes the contacts.

NPT: National Pipe Thread.

NSF: A not-for-profit, non-governmental organization that develops standards and provides product certification and education in the field of public health and safety.

Null Switch: A floating contact switch with a zone of no contact. Often used to operate reversible motors.

pH: An indication of the acidity or alkalinity of a solution in units ranging from 0 (most acidic), to 7 (neutral), to 14 (most alkaline).

Predictive Balancing: An air balance process that involves predicting the ideal flow set points for each terminal under adjustment (TUA) so that every terminal is at target flow throughout the process.

Pressure Drop: The difference in upstream and downstream pressure of the fluid flowing through a valve.

Proportional Balancing: An air balance process in which terminals under adjustment (TUA) are set in proportion to the key terminal in order for the entire system to be within tolerance of the design.

Proportional Control: A method of changing the output of a controller by an amount proportional to the error.

Proportional-Integral Control (PI): Proportional and integral control combined.

Proportional-Integral-Derivative Control (PID): Proportional, integral, and derivative control combined.

Range: The span of rates within which the sensing element of a given switch can be set to actuate an electric switch.

Rated Pressure: The maximum pressure that the actuating components of the switch in contact with the media can withstand continuously and/or repeatedly without risk of permanent damage.

Relative Humidity: The ratio of the quantity of water vapor in the air to the quantity of water vapor required for saturation at the same temperature.

Repeatability: The closeness of agreement between the results of successive measurements of the same measured, carried out under the same conditions of measurement, i.e.: by the same measurement procedure; by the same observer; with the same measuring instruments, used under the same conditions; at relatively short intervals of time. [IEC 60050-300]

Repetitive Accuracy: The ability of a switch to operate repetitively at its set point under consistent conditions.

Response Time: The time it takes an element to respond to a change in the value of the measured variable or to produce a change in the output signal.

Rotameter: A variable area flowmeter consisting of tapered tube and a float.

RS-232: (Recommended Standard 232) is a standard for serial binary data signals connecting between a DTE (Data Terminal Equipment) and a DCE (Data Circuit-terminating Equipment).

RS-485: (Now known as EIA-485) is an OSI model physical layer electrical specification of a 2-wire, half-duplex, multipoint serial connection.

Saturation Point: The point at which condensation is formed.

Serial Transmission: Sending one bit at a time on a single transmission line.

Set or Actuation Point: The exact rate which will cause the electric switch to actuate.

Single-Pole Single Throw (SPST) Switch: A switch that only has one of either a normally open or a normally closed contact.

Single-Pole Double-Throw (SPDT) Switch: A switch combining both normally open and normally closed switch contacts.

Solid State: Any element that controls current without moving parts, vacuum gaps or heated filaments.

Span: The difference between the highest and lowest numbers in a range.

Span Temperature Coefficient: The maximum amount the span reading could change at any point within the compensated temperature range. This error is typically expressed as a percentage of full scale output of reading. It can also be expressed as percentage of full scale per °C, °F or K e.g. ±0.02%FS/°C.

Specific Gravity: The ratio of the density of a fluid to the density of a reference fluid.

Static Pressure: The pressure exerted by a fluid at rest. The outward push of a fluid against the walls of a container.

Temperature Compensation: The correction for the influence of temperature on a measurement.

3-A: 3-A Sanitary Standards Inc., A non-profit association representing equipment manufacturers, processors, regulatory sanitarians, and other public health professionals that creates standards and accepted practices for dairy and food processing equipment and systems.

Total Pressure: The sum of velocity and static pressure.

Transducer: Any device that generates an electrical signal from physical measurements.

Transmitter: A device that translates the low-level output of a sensor or transducer to a higher level signal suitable for transmission to a site where it can be further processed.

Turbulent Flow: Fluid flow in which the flow profile is a flattened parabola, the streamlines are not present, and the fluid is freely mixing.

Turndown Ratio: The ratio of the maximum to minimum measurable value that can still produce full-scale output.

Velocity Pressure (Dynamic Pressure): The pressure exerted by the velocity of a fluid. Can be measured by the difference between total and static pressure.

Viscosity: The resistance of a fluid to flow when subjected to shear stress.

Wet Bulb Temperature: The lowest temperature that can be obtained through the cooling effect of water evaporating into the atmosphere.

Zero Temperature Coefficient: The maximum amount the output reading at zero pressure might deviate over the compensated temperature range. This error is typically expressed as a percentage of full scale output of reading. It can also be expressed as percentage of full scale per °C, °F or K e.g. ±0.02%FS/°C.

AREA OF CIRCLES IN FT²			
Diam. in Inches	Area Square Feet	Diam. in Inches	Area Square Feet
1	.0054	30	4.909
1-1/2	.0123	31	5.241
2	.0218	32	5.585
2-1/2	.0341	33	5.940
3	.0491	34	6.305
3-1/2	.0668	35	6.611
4	.0873	36	7.069
4-1/2	.1105	37	7.467
5	.1364	38	7.876
5-1/2	.1650	39	8.296
6	.1964	40	8.727
6-1/2	.2305	41	9.168
7	.2673	42	9.621
7-1/2	.3068	43	10.08
8	.3491	44	10.56
8-1/2	.3940	45	11.04
9	.4418	46	11.54
9-1/2	.4923	47	12.05
10	.5454	48	12.57
11	.6600	49	13.10
12	.7854	50	13.64
13	.9218	51	14.19
14	1.069	52	14.75
15	1.227	53	15.32
16	1.396	54	15.90
17	1.576	56	17.10
18	1.767	58	18.35
19	1.969	60	19.63
20	2.182	62	20.97
21	2.405	64	22.34
22	2.640	66	23.76
23	2.885	68	25.22
24	3.142	70	26.73
25	3.409	72	28.27
26	3.687	74	29.87
27	3.976	76	31.50
28	4.276	78	33.18
29	4.587	80	34.91

ALTITUDE PRESSURE TABLE		
Mercury at 0°C (32°F)		
Altitude in feet	Inches of Mercury	In Millimeters of Mercury
-1,000	31.02	787.9
0	29.921	760.0
1,000	28.86	732.9
2,000	27.82	706.6
3,000	26.81	681.1
4,000	25.84	656.3
5,000	24.89	632.3
6,000	23.98	609.0
7,000	23.09	586.4
8,000	22.22	564.4
9,000	21.38	543.2
10,000	20.58	522.6
15,000	16.88	428.8
20,000	13.75	349.1
25,000	11.10	281.9
30,000	8.88	225.6
35,000	7.04	178.7
40,000	5.54	140.7
45,000	4.36	110.8
50,000	3.436	87.30

SPECIFIC GRAVITIES OF GASES		
(Based on 68°F and 14.7 lb. abs.)		
Acetylene	C_2H_2	.897
Air	. . . . .	1.000
Ammonia	NH_3	.587
Argon	A	1.378
Butane-N	C_4H_{40}	2.390
Butane-ISO	$(CH)_3)_2CH\ CH_3$	1.990
Carbon Dioxide	CO_2	1.517
Carbon Monoxide	CO	.966
Chlorine	CL_2	2.452
Ethane	C_2H_6	1.035
Helium	He	.138
Hydrogen	H_2	.070
Methane	CH_4	.553
Natural Gas	. . . . .	.665 (Approx. Avg.)
Nitric Oxide	NO	1.035
Nitrogen	N_2	.966
Nitrous Oxide	N_20	1.518
Oxygen	0_2	1.103
Propane	C_3H_8	1.550
Sulphur Dioxide	SO_2	2.209

VOLUME EQUIVALENTS		
1 Cu. Ft.	1 Gal. (U.S.)	1 Liter
1728 Cu. In.	231 Cu. In.	.0353 Cu. Ft.
7.481 Gal. (U.S.)	.1337 Cu. Ft.	.2642 Gal. (U.S.)
28.317 Liters	3.785 Liters	1000 Cu. Cm.
28.317 Cu. Cm.	3785 Cu. Cm.	

FLOW EQUIVALENTS							
1 Cu. Ft./Hr.	1 Cu. Ft./Min.	1 CC/Min.	1 CC/Hr.	1 LPM	1 LPH	1 Gal/Min.	1 Gal/Hr.
.0166 Cu. Ft./Min.	60 Cu. Ft./Hr.	60 CC/Hr.	.0167 CC/Min.	60 LPH	.0166 LPM	60 Gal/Hr.	.0167 Gal/Min.
.4719 LPM	28.316 LPM	.000035 Cu. Ft./Min.	.0000005 Cu. Ft.Min.	.035 Cu. Ft./Min.	.00059 Cu. Ft./Min.	.1337 Cu. Ft./Min.	.002 Cu. Ft./Min.
28.316 LPH	1699 LPH	.0021 Cu. Ft./Hr.	.00003 Cu. Ft./Hr.	2.1189 Cu. Ft./Hr.	.035 Cu. Ft./Hr.	8.021 Cu. Ft./Hr.	.1337 Cu. Ft./Hr.
471.947 CC/Min.	28317 CC/Min.	.001 LPM	.000017 LPM	1000 CC/Min.	16.667 CC/Min.	3.785 LPM	.063 LPM
28317 CC/Hr.	1,699,011 CC/Hr.	.06 LPH	.001 LPH	60,002 CC/Hr.	1000 CC/Hr.	227.118 LPH	3.785 LPH
.1247 Gal/Min.	7.481 Gal/Min.	.00026 Gal/Min.	.000004 Gal/Min.	.264 Gal/Min.	.004 Gal/Min.	3,785.412 CC/Min.	63.069 CC/Min.
7.481 Gal/Hr.	448.831 Gal/Hr.	.0159 Gal/Hr.	.00026 Gal/Hr.	15.851 Gal/Hr.	.264 Gal/Hr.	227,125 CC/Hr.	3785 CC/Hr.

SPECIFIC GRAVITY OF LIQUID	
Liquid	**Specific Gravity**
Acetone	0.792
Alcohol, ethyl	0.791
Alcohol, methyl	0.810
Ammonia, saturated	0.655
Benzene	0.9
Brine (10% Na Cl)	1.08
Carbolic acid	0.950 to 0.965
Carbon disulfide	1.293
Carbon tetrachloride	1.595
Chloroform	1.489
Ether	0.736
Fuel oil 1	0.82 to 0.95
Fuel oil 2	0.82 to 0.95
Fuel oil 3	0.82 to 0.95
Fuel oil 5A	0.82 to 0.95
Fuel oil 5B	0.82 to 0.95
Fuel oil 6	0.82 to 0.95
Gas oils	0.89
Gasoline a	0.74
Gasoline b	0.72
Gasoline c	0.68
Glycerine	1.260
Heptane-n	0.688
Hexane	0.664
Kerosene	0.820
Mercury	13.600
Methyl acetate	0.93
Methyl iodide	2.28
Milk	1.028 to 1.035
Naptha, petroleum ether	0.665
Naptha, wood	0.848 to 0.810
Oil, castor	0.969
Oil, coconut	0.925
Oil, cotton seed	0.926
Oil, creosote	1.040 to 1.200
Oil, linseed, boiled	0.924
Oil, olive	0.918
Oil, palm	0.924
Oil, peanut	0.92
Oil, sesame seed	0.923
Oil, soy bean	0.924 to .928
Pentane	.623
Propylene glycol	1.038
SAE 30 lube oil	0.9
Sea water	1.025
Sodium chloride, 5%	1.037
Sodium chloride, 25%	1.196
Sodium hydroxide (caustic soda), 20%	1.22
Sodium hydroxide (caustic soda), 30%	1.33
Sodium hydroxide (caustic soda), 40%	1.43
Turpentine (spirits)	0.870
Water	1.000

AGENCY APPROVALS	
	Products with this symbol meet certain requirements for 3-A Sanitary Standards for design and fabrication as governed by 3-A SSI.
	Products with this symbol have had representative samples tested to meet BTL compatibility.
	Products with this symbol conform to certain standards and are eligible to be placed on the market in the European Community.
	This symbol assures you that the product meets certain safety standards and/or performance criteria as set by the Canadian Standards Association.
	Products with this symbol conform to certain ATEX requirements as set by the European Union.
	Products with this mark meet certain requirements as reported by Factory Mutual Research.
	Products with this mark meet certain Canadian requirements as reported by Factory Mutual Research.
	Products with this mark meet certain Canadian and U.S. requirements as reported by Factory Mutual Research.
	Products with this symbol certify to standards for safety of electrical equipment for explosive atmosphere requirements as set by the IECEx Management Committee ExMC.
	The National Institute of Metrology, Standardization and Industrial Quality is a Brazilian federal autarchy, linked to MDIC, the Ministry of Development, Industry and Foreign Commerce.
	Products with this symbol are listed by NSF International. Samples of these products have been evaluated by NSF and meet the safety standards set forth by NSF International.
	Products with this symbol have had representative samples tested to meet UL's safety requirements. These requirements are primarily based on UL's own published Standards for Safety.
	Products with this symbol have been evaluated by UL to Canadian safety requirements, which may be somewhat different from U.S. safety requirements.
	Products with this symbol indicate compliance with both Canadian and U.S. safety requirements.
	Products with this symbol are certified UL recognized components to U.S. requirements. Component parts are part of a larger product or system. These components may have restrictions on their performance or may be incomplete in construction.
	Products with this symbol are certified UL recognized components to Canadian requirements.
	Products with this symbol are certified UL recognized components to both Canadian and U.S. requirements.

HAZARDOUS LOCATIONS LISTINGS	
Class I (-4)	Flammable gases or vapors are or may be present in sufficient quantities to produce explosive or ignitable mixtures.
Division I (-4A)	Gases or vapors are or may be in the atmosphere in normal operations.
Group A (-2)	Containing acetylene.
Group B (-2)	Containing hydrogen, ethylene oxide & propylene oxide or gases or vapors of equivalent hazard.
Group C (-2)	Containing ethyl-ether vapor, ethylene or cyclopropane.
Group D (-2)	Containing gasoline, hexane, naptha, benzine, butane, propane, alcohol, acetone, lacquer solvent or natural gas.
Division II (-4B)	Gases or vapors are not normally present. They may be present due to leakage, accidents or maintenance. It is possible for one atmosphere to contain the same items as listed for Groups of Division I of this class.
Class II (-5)	Combustible dust may be present in sufficient quantities to produce an explosive atmosphere.
Division I (-5A)	Dust in suspension. Dust is or may be present in the atmosphere due to normal operating conditions.
Group E (-2)	Containing metal dust, including aluminum, magnesiums and their commercial alloys, and other metals of similar hazardous characteristics.
Group F (-2)	Containing carbon black, coal or coke dust.
Group G (-2)	Containing flour, starch or grain dust.
Division II (-5D)	Dust not normally in suspension. Possibly containing the same items as listed for Groups of Division I of this class.
Class III (-6)	Ignitable fibers are present, but not necessarily present in air in quantities sufficient to produce ignitable mixtures.
Division I (-6A)	Easily ignitable fibers or materials producing combustible flyings are handled, manufactured or used.
Division II (-6B)	Easily ignitable fibers are stored or handled.

NEMA STANDARDS FOR INDUSTRIAL ENCLOSURES	
Type 1	General purpose - indoor.
Type 2	Drip-proof - indoor. Protects against limited amounts of falling liquids and dirt.
Type 3	Dust-tight, raintight and sleet resistant - outdoor. Protects against windblown dust, rain sleet and external ice formation.
Type 3R	Same as Type 3, except not dust-tight.
Type 3S	Same as Type 3, but provides for operation of external mechanism when ice-laden.
Type 4	Watertight and dust-tight - indoor and outdoor. Protects against windblown dust and rain, splashing water and hose-directed water.
Type 4X	Same as Type 4 except also corrosion resistant.
Type 5	Dust-tight - indoor. Protects against dust and falling dirt.
Type 6	Submersible, watertight and dust-tight - indoor and outdoor. Protects against water entry during occasional temporary submersion to a limited depth.
Type 6P	Same as Type 6 except for prolonged submersion.
Type 7	Class I indoor hazardous locations. Explosion-proof, may be A, B, C or D.
Type 8	Class I indoor or outdoor hazardous locations - oil immersed equipment, may be A, B, C or D.
Type 9	Class II indoor hazardous locations. Explosion-proof, may be E, F or G.
Type 10	Mining Enforcement Safety Administration. Explosion-proof in methane or natural gas.
Type 11	Corrosion resistant and drip-proof - oil-immersed - indoor.
Type 12	Dust-tight and drip-tight - indoor, non-corrosive dripping liquids.
Type 12K	Same as Type 12 except enclosures have knockouts.
Type 13	Oil-tight and dust-tight - indoors, non-corrosive spray of water, oil and coolant.

IP CODES FOR INDUSTRIAL ENCLOSURES				
Example	**IP**	**0**	**0**	**IP00 - No special protection from solids or liquids**
Ingress Protection	IP			IEC 60529 degrees of protection provided by enclosures (IP code)
Protection from Solids		0		No protection
		1		Protection against solid objects larger than 50 mm in diameter
		2		Protection against solid objects larger than 12 mm in diameter
		3		Protection against solid objects larger than 2.5 mm in diameter
		4		Protection against solid objects larger than 1 mm in diameter
		5		Dust protected
		6		Dust tight
Protection from Liquids			0	No protection
			1	Protection against dripping water
			2	Protection against dripping water when tilted 15 degrees
			3	Protection against spraying water
			4	Protection against splashing water
			5	Protection against water jets
			6	Protection against powerful water jets
			6K	Protection against powerful water jets with increased pressure
			7	Protection against temporary immersion up to 1m depth
			8	Protection against immersion of 1m or more depth
			9K	Protection against powerful water jets with high temperature
*Protection stated above is in reference to protection of the internal equipment housed inside of the enclosure The IP code may be followed by one or two characters for special conditions during testing.				

REGISTERED TRADEMARKS OF DWYER INSTRUMENTS, LLC

Capsuhelic®	IsoSense®	Photohelic®
Capsu-Photohelic®	Lin-E-Aire®	Precisor®
Coolpoint®	Love®	Quick-View®
Deltapoint®	Magnehelic®	Rate-Master®
Digihelic®	MagneSense®	Safe-T-Ohm®
DigiMag®	Mercoid®	Slack Tube®
Duotect®	Mercoid Control®	SMART Air Hood®
Durablock®	Minihelic®	Spirahelic®
Dwyer®	Mini-Master®	Stabili*SENSE*®
Flex-Tube®	Mini-Photohelic®	Universal®
Flowstream®	Mobile Meter®	Visi-Float®
Flotect®	One-Touch®	
Iso Verter®	Optitrol®	

COMMON LAW MARKS OF DWYER INSTRUMENTS, LLC

AQStick™	Minitactor™	Tell Tale Jr.™
Even-Action™	Mother Node™	TraverseIT™
Federal Warrant™	PredictAir™	Ultra-Mag™
Hi-Flow™	Predict Flow™	Ultra-View™
Lovelink™	Proximity™	VAMI™
Mini-Node™	Tell Tale™	Vaneometer™

COMMONLY USED MARKS & GRAPHICS

MARKS REGISTERED TO COMPANIES OTHER THAN DWYER INSTRUMENTS, LLC

Underwriters Laboratories, Inc.

Underwriters Laboratories, Inc.

Underwriters Laboratories, Inc.

MasterCard International Inc.

Visa International Services Association

Canadian Standards Association

FM Global Technology

BACnet International, Inc.

Alumel®	Conceptech, Inc.	**Hirschmann®**	Hirschmann Automation and Control GMBH	**Trendreader®**	ACR Systems, Inc.
Android®	Google LLC	**HyperTerminal®**	Hilgraeve, Incorporated	**Tygon®**	Saint-Gobain Performance Corporation
Balco®	CRS Holdings, Inc.	**Iglide®**	Igus GMBH		
Bluetooth®	Bluetooth SIG, Inc.	**Inconel®**	Huntington Alloys Corporation	**VCR®**	Swagelok Company
Chromel®	Conceptech, Inc.	**iOS®**	Cisco Technology, Inc.	**Velcro®**	Velcro IP Holdings LLC
Delrin®	DuPont Polymers, Inc.	**Kalrez®**	DuPont Polymers, Inc.	**Windows®**	Microsoft Corporation
Duracell®	Duracell U.S. Operations, Inc.	**LEED®**	U.S. Green Building Council	**Viton®**	Fluorocarbon (FKM) and The Chemours Company FC, LLC
ECO Brass®	Mitsubishi Materials Corporation	**Lexan®**	SABIC Global Technologies B.V.		
Energizer®	Energizer Brand, LLC	**Loctite®**	HENKEL IP & HOLDING GMBH	**Windows NT®**	Microsoft Corporation
Eveready®	Energizer Brand, LLC	**Makrolon®**	COVESTRO INTELLECTUAL PROPERTY GMBH & CO.	**Windows® Xp Sp3**	Microsoft Corporation
Excel®	Microsoft Corporation			**Windows Vista®**	Microsoft Corporation
Fluon®	AGC Chemicals Americas, Inc.	**Modbus®**	Schneider Electric USA, Inc.	**Windows® 7**	Microsoft Corporation
Fluorolube®	Gabriel Performance Products LLC	**Norprene®**	Saint-Gobain Abrasives, Inc. Corporation	**Windows® 8**	Microsoft Corporation
Freon®	The Chemours Company FC, LLC	**Noryl®**	SHPP GLOBAL TECHNOLOGIES B.V.	**WirelessHART®**	Fieldcomm Group, Inc.
Google®	Google LLC	**Powerpoint®**	Microsoft Corporation	**Air Flow™**	TSI, Inc.
Google Play™	Google LLC	**Quick Quizzes®**	The ATP Group, Inc.	**No More Leaks™**	Permatex
Gorilla®	Corning, Incorporated	**Santoprene®**	Exxon Mobil Corporation	**Precision Flow™**	Sierra Instruments, Inc.
HART®	Fieldcomm Group, Inc.	**Swagelok®**	Swagelok Company	**ProHood™**	TSI, Inc.
Hastelloy®	Haynes International, Inc.	**Teflon®**	The Chemours Company FC, LLC	**Smart Interface™**	Ientek Co., Ltd.

INFORMATION ABOUT MERCURY-ADDED PRODUCTS

Dwyer Instruments, LLC (Dwyer), in an effort to comply with all local, state, federal, and international laws regarding the sale of Mercury-added Products (MAP's), has adopted this policy. This policy will be posted on our web site for future reference and will remain in effect until Dwyer phases out all MAP's.

Dwyer continues its development of non-mercury replacement alternatives for those products currently offered containing mercury. We will continue to work with all customers to supply mercury added products as needed for replacement of products currently in use and to guide customers towards non-mercury added products for new applications.

Dwyer will comply with all local, state, federal, and international laws regarding the sale of mercury added products. These laws may affect our ability to sell, distribute, or transport products into restricted states and/or countries. Mercury added product sales may be limited or denied to certain customers depending on the location or intended use of the product.

Dwyer encourages all customers to become familiar and comply with all mercury legislation. Sales of any and all mercury added products will be discontinued to any customer that knowingly or willfully disregards any legislation concerning mercury.

Dwyer requests that all mercury containing products are properly disposed of at the end of their useful life. Many web sites are available to help educate consumers about proper disposal of mercury added products. Please visit www.newmoa.org for addition information related to mercury usage.

PRODUCT	SECTION	PAGE
16B – 1996		
16B	Temperature	118-119
16C	Temperature	117
16G	Temperature	120-121
16L	Temperature	122
102	Level	318
123	Level	318
125	Level	318
160	Test, Adjust, & Balance	183
160E	Test, Adjust, & Balance	184
160F	Test, Adjust, & Balance	184
160G	Test, Adjust, & Balance	168
160S	Test, Adjust, & Balance	185
165	Valves	442
166T	Test, Adjust, & Balance	185
185	Valves	444
1000E	Pressure	91
1000W	Pressure	91
1102	Level	318
1211	Test, Adjust, & Balance	180
1212	Test, Adjust, & Balance	180
1221, 1222, 1223	Test, Adjust, & Balance	179
1227, 1227M	Test, Adjust, & Balance	180
1230, 1235	Pressure	30
1620	Pressure	53
1630	Pressure	53
1638	Pressure	53
1640	Pressure	52
1800	Pressure	47
1823	Pressure	47
1831	Pressure	52
1900	Pressure	49
1910	Pressure	49
1950	Pressure	55
1950G	Pressure	55
1996	Pressure	54
2-5000 – 2900		
2-5000	Pressure	26-27
200	Pressure	29
250-AF	Pressure	29
265	Valves	443
285	Valves	444
2000	Pressure	20-23
2000VA	Valves	420-421
2700	Valves	440
2800	Valves	440
2900	Valves	441
3PBV – 3500		
3PBV	Valves	412
32B	Temperature	118-119
38R	Valves	418-419
300	Pressure	29
3000MR/3000MRS	Pressure	42
3000WA	Valves	421
3100D	Pressure	74-75
3200G	Pressure	104-105
3400	Pressure	106-107
3500	Pressure	73

PRODUCT	SECTION	PAGE
4 – 43000		
4	Temperature	144
4B	Temperature	118-119
4C	Temperature	117
4G	Temperature	120-121
400	Test, Adjust, & Balance	182
420	Pressure	30
460	Test, Adjust, & Balance	182
471B	Test, Adjust, & Balance	169
472A-1	Test, Adjust, & Balance	188
473B	Test, Adjust, & Balance	170
475	Test, Adjust, & Balance	172
475-AV Kits	Test, Adjust, & Balance	175
476A	Test, Adjust, & Balance	173
477AV	Test, Adjust, & Balance	171
477-AV Kits	Test, Adjust, & Balance	175
477B	Test, Adjust, & Balance	174
478A	Test, Adjust, & Balance	173
480	Test, Adjust, & Balance	187
485B	Test, Adjust, & Balance	168
490A	Test, Adjust, & Balance	177
490W	Test, Adjust, & Balance	166
490A-HKIT	Test, Adjust, & Balance	167
4000	Pressure	31
43000	Pressure	41
5 – 550		
5	Temperature	144
500	Flow	267
550	Flow	267
605 – 682		
605	Pressure	67
608	Pressure	76
616D	Pressure	61
616KD	Pressure	58
616KD-LR	Pressure	59
616W	Pressure	60
616WL	Pressure	60
626	Pressure	100-101
628	Pressure	100-101
629C	Pressure	78
629HLP	Pressure	79
636	Pressure	102
636D	Pressure	77
638R	Pressure	97
641	Air Quality	218
641B	Air Quality	219
641RM	Air Quality	219
645	Pressure	80
647	Pressure	80
655A	Pressure	77
657	Air Quality	225
670	Air Quality	213
673	Pressure	99
681	Pressure	96
682	Pressure	98
765 – 784		
765	Pressure	81
781	Process Control	354
782	Process Control	354
783	Process Control	355
784	Process Control	355
8 – 862E		
8	Temperature	143
8B	Temperature	118-119
8C	Temperature	117
8G	Temperature	120-121
862E	Temperature	130

PRODUCT	SECTION	PAGE
9		
9	Process Control	354
9	Temperature	145
A-169 – AT-3000MR/MRS		
A-169	Accessories	449
A-170	Accessories	449
A-286	Pressure	23
A-299	Pressure	23
A-300	Pressure	23
A-302F	Accessories	452
A-310A	Pressure	21
A-320-A	Pressure	23
A-320-B	Pressure	23
A-350	Test, Adjust, & Balance	193
A-368	Pressure	23
A-369	Pressure	23
A-371	Pressure	23
A-396A	Test, Adjust, & Balance	193
A-417A	Accessories	453
A-418E	Accessories	453
A-418N	Accessories	453
A-419A	Accessories	453
A-420A	Accessories	453
A-421	Accessories	453
A-432	Pressure	20
A-464	Pressure	23
A-465	Accessories	453, 455
A-489	Accessories	452
A-491	Accessories	452
A-493	Accessories	452
A-605	Pressure	20
A-610	Pressure	23
A-700	Process Control	361
A-900, A-901	Level	339
A-5000	Accessories	454
A-IEF	Flow	293
A-TC	Temperature	142
A1F	Pressure	92
A1PS/A1VS	Pressure	93
A2	Pressure	95
A6	Pressure	94
A3000	Pressure	38-39
AAFS	Air Quality	213
ACT	Valves	416-417
Accessories - Gage Fluids	Accessories	455
Accessories - Fittings & Filters	Accessories	454
Accessories - Kits	Accessories	455
Accessories - Misc.	Accessories	455
Accessories - Valves & Connectors	Accessories	454
Adjustable Pressure Snubber	Accessories	451
ADPS	Pressure	45
AFG	Air Quality	210
AN2	Process Control	353
ANE-1	Test, Adjust, & Balance	178
AP	Pressure	94
AP3	Test, Adjust, & Balance	164
APM	Process Control	352
APM	Level	338
APS/AVS	Pressure	93
APT	Process Control	360
AQH-20	Test, Adjust, & Balance	178
ARK	Valves	417
ASG	Test, Adjust, & Balance	191
AT-1800	Pressure	48
AT-1900	Pressure	50
AT-2000	Pressure	24
AT-3000MR/MRS	Pressure	43
AT-MSX	Pressure	69

PRODUCT	SECTION	PAGE
AT-605 – AVUL		
AT-605	Pressure	68
AT-A3000	Pressure	40
AT-ADPS	Pressure	46
AT-DH3	Pressure	37
AT-MS	Pressure	72
AVFS	Air Quality	214
AVLV	Air Quality	217
AVPT	Air Quality	216
AVUL	Air Quality	215
B-190 – BYS		
B-190	Level	320
BBV-0	Valves	431
BBV-1	Valves	431
BBV-2	Valves	432
BCHP	Test, Adjust, & Balance	195
BDL	Test, Adjust, & Balance	199
BDPA	Pressure	45
BHC	Valves	428
BICV	Valves	428
BPS-005	Process Control	362
BPS-015	Process Control	362
BT	Temperature	114
BTLRN	Temperature	114
BTO	Temperature	116
BTT	Temperature	131
BTT-E/N	Temperature	131
BV2M	Valves	401
BYS	Valves	430
Capsu-Photohelic® Gage – CXA		
Capsu-Photohelic® Gage	Pressure	41
Capsuhelic® Gage	Pressure	31
CCS	Process Control	357
CCT40/50	Process Control	359
CCT60/70	Process Control	359
CDT	Air Quality	227
CDTA	Air Quality	228
CDTC	Air Quality	228
CDTR	Air Quality	229
CDTV	Air Quality	230
CDWP	Air Quality	226
CFS2	Level	319
CHP	Test & Data	192
CLS1	Level	322
CLS2	Level	321
CLT	Level	333
CMS300	Air Quality	232
CMT200	Air Quality	232
CRF2	Level	332
CSE-3R	Process Control	375
CSE-KN	Process Control	376
CSG	Test, Adjust, & Balance	191
CTF	Level	323
CXA	Pressure	96

PRODUCT	SECTION	PAGE
DA-7035N – DX		
DA-7035N	Temperature	130
DA/DS	Pressure	88-89
DAFA	Air Quality	212
DBLM	Level	324
DBV	Valves	401
DBVL	Valves	402
DCGII	Pressure	84
DCT500A	Process Control	369
DCT500ADC	Process Control	370
DCT600	Process Control	371
DCT1000	Process Control	372
DCT1000DC	Process Control	373
DCV	Valves	426-427
DevCom2000	Pressure	105
DFC	Flow	297
DFM	Flow	295
DFS2	Temperature	129
DH	Pressure	35
DH Links	Pressure	33
DH3	Pressure	36
DHII	Pressure	34
Digihelic Links™	Pressure	33
Digihelic® Controller	Pressure	34-36
DigiMag® Gage	Pressure	25
DLI2	Test, Adjust, & Balance	197
DLP	Test, Adjust, & Balance	197
DM-1000	Pressure	25
DM-2000	Pressure	65
DP	Pressure	57
DP3	Test, Adjust, & Balance	165
DPG-000	Pressure	83
DPG-100	Pressure	83
DPG-200	Pressure	85
DPGA	Pressure	82
DPGAB	Pressure	82
DPGW	Pressure	82
DPGWB	Pressure	82
DPMA	Process Control	350
DPML	Process Control	350
DPMP	Process Control	350
DPMW	Process Control	350
DPMX	Process Control	351
DPT	Pressure	86
DR	Flow	256
DS	Flow	262-263
DSGT	Pressure	85
DT	Valves	438
DTFA	Flow	266
DTFW	Flow	266
Duotect® Switch	Pressure	92
Durablock® Gage	Pressure	29
Durablock® Manometer	Pressure	30
DW-USB	Test, Adjust, & Balance	196
DW-USB-LCD	Test, Adjust, & Balance	196
DW-WIFI	Test, Adjust, & Balance	200
DX	Pressure	57
E – EPTA		
E	Level	326-327
EBV	Level	340
EC	Temperature	148
EDA	Pressure	87
EDPS	Pressure	45
EPTA	Valves	439

PRODUCT	SECTION	PAGE
F195 – FSW2		
F195	Accessories	448
F222, F451	Accessories	448
F6/F7	Level	313-314
F7-LPP	Level	314
F7-MM	Level	316
F7-MQ	Level	315
F7-MS	Level	317
FBLT	Level	331
FDT	Pressure	99
Flex-Tube® Manometer	Test, Adjust, & Balance	179-180
Flotect® Switch	Flow	270-275
Flotect® Switch	Level	309-312
FLST	Air Quality	206-207
FS-2	Flow	276
FSW2	Level	319
G – GSTC		
G	Level	326-327
Gage Tubing Accessories	Accessories	453
GFC	Flow	298
GFM	Flow	296
GG	Accessories	450
GSTA	Air Quality	231
GSTC	Air Quality	231
H2 – HTDL-20/30		
H2	Pressure	92
H3	Pressure	56
HCHP	Test, Adjust, & Balance	194
HF	Flow	259
HFO	Flow	278
HFPC	Flow	258
HFPS	Flow	258
HFT	Flow	278
HGV	Valves	430
HHT	Air Quality	226
Hi-Flow™ Valve	Valves	420-421
HM35	Test, Adjust, & Balance	176
HNV	Valves	429
HP	Test, Adjust, & Balance	192
HS	Air Quality	220
HTDL-20/30	Test, Adjust, & Balance	198
IEF – IWP		
IEF	Flow	291
IEFB	Flow	292-293
IF	Flow	257
IP	Valves	439
IS626	Pressure	108
ISDP	Pressure	66
IT	Temperature	115
IT-W	Temperature	115
IWP	Pressure	103
KFD0		
KFD0	Process Control	366

PRODUCT	SECTION	PAGE
L4 – LPTK		
L4	Level	309
L6	Level	310
L8	Level	311
L10	Level	312
LCI132	Process Control	351
LCT216	Process Control	364
LCT316	Process Control	364
LFM	Flow	253
LPTK	Test, Adjust, & Balance	189
MAFS – MW-1		
MAFS	Air Quality	211
Magnehelic® Gage	Pressure	20-21
Magnehelic® Gage Mounting Accessories	Pressure	23
Magnehelic® Gage Options	Pressure	22
Magnehelic® Transmitter	Pressure	67
Magnesense® Transmitter	Pressure	69
Mark 1, 3, 4	Valves	434-436
Mark II	Pressure	28
Mark II	Test, Adjust, & Balance	181
Mark II WSI	Test, Adjust, & Balance	187
MBLT	Level	329
MCS	Process Control	357
MDA	Pressure	51
MDS	Pressure	51
MFS	Flow	290
MFS2	Flow	290
Mini-Master® Flowmeter	Flow	250-251
Mini-Node™	Process Control	361
Mini-Photohelic® Gage	Pressure	44
Minihelic® Gage	Pressure	26-27
MM	Flow	250-251
MN-1	Process Control	361
Mobile Meter® App	Test, Adjust, & Balance	165
MP	Pressure	44
MPC	Level	336
MPC Jr.	Level	337
MPM	Process Control	352
MPM	Level	338
MPR	Valves	446
MSCS	Process Control	358
MSX	Pressure	71
MSX PRO	Pressure	70
MTL5541	Process Control	366
MTL7706/7787	Process Control	365
MV	Valves	403
MVR	Level	307
MVS	Pressure	95
MW-1	Test, Adjust, & Balance	186

PRODUCT	SECTION	PAGE
NVII		
NVII	Valves	429
O-4 – OSW-100		
O-4	Temperature	138
OLS	Level	320
One-Touch® Transmitter	Pressure	58
OP	Flow	264-265
OSC-200	Air Quality	234
OSW-100	Air Quality	234
P – PUF		
P	Level	326-327
P	Temperature	145
PAFS-1000	Air Quality	210
PBLT2	Level	330
PBLTX	Level	330
PBV	Valves	400
PCHP	Test, Adjust, & Balance	194
PE	Flow	264-265
PFG2	Pressure	33
PFT	Flow	279
PG	Pressure	54
Photohelic® Gage	Pressure	38-39, 42
PLS	Level	325
PLS2	Level	324
PMT2	Process Control	374
PPM	Process Control	352
PPM	Level	338
PRECISOR® Positioner Valves	Valves	442-443
PredictAir™ Application Software	Test, Adjust, & Balance	162
PS	Accessories	451
PTGD	Pressure	32
PUB	Flow	288
PUB	Test, Adjust, & Balance	188
PUF	Flow	288
PUF	Test, Adjust, & Balance	188
Quick-View® Indicator – QV		
Quick-View® Indicator	Valves	433
QV	Valves	433

PRODUCT	SECTION	PAGE
R – RTD		
R	Temperature	143
Rate-Master® Flowmeter	Flow	246-247, 260
RDCV	Valves	426-427
RH-R	Air Quality	225
RHP	Air Quality	223
RHP-E/N	Air Quality	221
RHPLC	Air Quality	222
RHRS	Air Quality	224
RM	Flow	246-247
RMV	Flow	260
RMV II	Flow	260
RP3	Test, Adjust, & Balance	164
RPMC	Pressure	64
RRT3	Temperature	116
RSF	Flow	257
RSM	Pressure	61
RSMC	Pressure	62
RSME	Pressure	63
RSV	Valves	425
RTD	Temperature	141
S2 – SYS		
S2	Temperature	139
SA1100	Pressure	90
SAE	Valves	413
SAH	Test, Adjust, & Balance	162
SBLT2	Level	328
SBLTX	Level	328
SBSV-B	Valves	422
SBSV-S	Valves	422
SC1	Process Control	353
SCD	Temperature	124
SCD-PS	Process Control	362
SCS	Process Control	356
SF	Flow	280
SF2	Flow	280
SFI	Flow	268-269
SFI-100	Flow	268-269
SFI-100T	Flow	281
SFI-300, SFI-350, SFI-360	Flow	268-269
SFI-300F, SFI-360F	Flow	268-269
SFI-400, SFI-400F	Flow	268-269
SFI-500	Flow	267
SFI-550	Flow	267
SFI-700	Flow	268-269
SFI-800	Flow	281
SL-2000	Air Quality	233
Slack Tube® Manometer	Test, Adjust, & Balance	180
SMV2	Valves	403
SN	Valves	424
Snubber	Accessories	451
SPPM	Process Control	349
SPPM2	Process Control	348
SRC	Valves	424
SSCS	Process Control	358
SSV-B	Valves	423
SSV-S	Valves	423
Static Pressure Accessories	Accessories	453
Static Pressure Tips	Accessories	452
STRA	Air Quality	208-209
Surge Damper	Accessories	453
SVE	Valves	425
SVT	Process Control	368
SWBV	Valves	402
SYS	Valves	430

PRODUCT	SECTION	PAGE
T – TVA		
T	Temperature	146
TABKIT	Test, Adjust, & Balance	163
TAC-L	Test, Adjust, & Balance	190
TBU-00	Temperature	132
TCS	Temperature	125
TDFS2	Flow	277
TDFT	Flow	277
TE	Flow	264-265
TE	Temperature	135
TE-A	Temperature	138
TE-E/N	Temperature	134
TE-I	Temperature	136
TE-OND/RND/OSA	Temperature	137
TE-SNW	Temperature	138
TE-TNS	Temperature	136
TE-WSS	Temperature	134
Temperature Sensors	Temperature	140
TFLS	Level	323
THC	Air Quality	220
Thermocouples & RTDs	Temperature	141
Thermocouple Accessories	Temperature	148
TID	Temperature	122
TR-7	Process Control	367
TraverseIT® App	Test, Adjust, & Balance	165
TS-PROBES	Temperature	129
TS2	Temperature	127
TSDIN	Temperature	124
TSF	Temperature	123
TSF-DF	Temperature	123
TSS2	Temperature	127
TST	Temperature	126
TSW	Temperature	128
TSWB	Temperature	128
TSXT	Temperature	126
TTE	Temperature	133
TTW	Temperature	132
TUF	Flow	294
TVA	Flow	254
UBV – UV		
UBV	Valves	402
UBT	Flow	289
UFB	Flow	286
UFM2	Flow	287
ULSL	Level	335
ULSM	Level	335
ULSS	Level	335
ULT	Level	334
Ultra-Mag™ Switch	Level	326-327
UTG	Flow	287
UV	Flow	252

PRODUCT	SECTION	PAGE
V4 – VRLS		
V4	Flow	270-271
V6	Flow	272-273
V7	Flow	274
V8	Flow	275
V10	Flow	274
VA	Flow	255
Valve Mounting Kits	Valves	436
Vaneometer™ Anemometer	Test, Adjust, & Balance	187
VAT	Flow	254
VB	Valves	446
VBT-1	Process Control	363
VF	Flow	248
VFA, VFB	Flow	248
VFC, VFCII	Flow	249
VFLO	Flow	261
Visi-Float® Flowmeter	Flow	248-249
VP3	Test, Adjust, & Balance	164
VPS	Valves	437
VR	Level	306
VRLS	Level	322
W – WWDP		
W	Temperature	147
WD	Level	308
WD3	Level	308
WE01	Valves	384-385
WE02	Valves	388-389
WE03	Valves	390-391
WE04	Valves	392-393
WE05	Valves	394-395
WE06	Valves	396-397
WE07	Valves	398-399
WE08	Valves	386-387
WE20	Valves	414-415
WE31	Valves	404-405
WE33	Valves	408-409
WE34	Valves	410-411
WE35	Valves	406-407
WHT	Air Quality	224
Wind Meter	Test, Adjust, & Balance	186
WM2	Flow	283
WMT2	Flow	283
WMH	Flow	282
WNT	Flow	282
WPT	Flow	284
WPTN	Flow	285
WSI	Test, Adjust, & Balance	187
WVT	Flow	284
WWDP	Pressure	81

PAGE

2
Valves
- Manifold 431

3
Valves
- Manifold 431

5
Valves
- Manifold 432

A
Accessories **447-455**
- Connectors 428,454
- Digital Temperature Switch Configuration Key 129
- Enclosures 23,339,376
- Filters 448,454
- Fittings 428,454
- Gage Fluid 455
- Gage Guards 450
- Hosing 453
- Humidity Radiation Shield 224
- Mounting Brackets 23,455
- Pressure Snubbers 451
- Psychrometer 168
- Regulators and Lubricators 446
- Siphons 449
- Static Pressure 452-453
- Temperature 129
- Thermowells 115,136,147

Actuated
- Actuators 416-417,420-421
- Valves 384-400,404-412,414-415

Actuators
- Electric 416-417
- Pnuematic 416-417,420-421
- Repair Kit 417

Air
- Filter Instruments 20-23,26-27,33

Air Control
- Manifolds 431-432

Air Filter Instruments **29**

Air Filters/Regulators **446,448**

Air Flow
- Duct Averaging Sensors 210-211
- Duct Stations 206-209
- Gages 20-27,31
- Meters 246-260
- Meters with Switches 278
- Mobile Application 164
- Sensors 168,183-185,206-210,218-219,264-265
- Stations 206-209
- Switches 213-214,270-276,278
- Transmitters
  - Duct Mount 215-217

Air Flow Hood **162**

Air Handler **34,58-59,135,138,214,225,308**

Air Quality **201-234**
- Applications 204-205
- Gas Sensing Transmitters 226-229,231-233
- Humidity Transmitters 206-209,212-214,218-226
- Pitot Tubes 183-185
- Volatile Organic Compound (VOC) Transmitters
  - Duct Mount 229
  - Wall Mount 229

Air Temperature
- Sensors 131-138,140-141,143-148,169,178

Air Velocity
- Duct Averaging Sensors 210-211
- Duct Stations 206-209
- Flow Stations 206-209
- Flow Switches 270-276
- Gages 20-27,31,181-182
- Indicators 164,169,175,181-182,186-187,212
- Manometer 165, 171-172,175, 181-182
  - Digital 171-172,175
  - Fluid 181-182
- Meters 162,164,169,172-173,175,181-182,186-187
- Mobile Application 165
- Monitors 181-182,212
- Sensors 168,183-185,206-210,262-265
- Switches 213-214,270-275
- Test Kits 165,169,171-172,175,181-182,186
- Transmitters 215-219
  - Duct Mount 215-217
- Wind Meters 178,183-187

Air Velocity Transmitter **215-217**

Alarms
- Loop and Limit 122-123,125,353
- Process Indicator 141,351,353
- Visual and Audible 45,353

Ambient Air Temperature Sensors **134,137-138**

Analog Signal Generator **191**

Analyzers
- Carbon Monoxide/Carbon Dioxide 178

Anderson® Midwest **268-269,281**

Annunciators **353**

Applications
- Air Quality 204-205
- Flow 242-244
- Level 304-305
- Pressure 16-17
- Process Control 346-347
- Temperature 112-113
- Test, Adjust, & Balance Applications 154-155
- Valves 382

AS-Interface
- Position Indicators/Switches/Transmitters 433-437

Assemblies
- Temperature Sensor 146

ATEX
- Barrier
  - Galvanic 366
  - Zener 365
- Differential Pressure
  - Transmitter 69,72
- Flow Switches 270-273
- Level Switches 309-310
- Photohelic® Switch/Gages 40,43
- Position Indicators/Switches/Transmitters 434-436
- Pressure Controller
  - Differential 37
- Pressure Gages
  - Differential 24
- Pressure Switches 56,90
  - Differential 46,48,50,55
- Pressure Transmitter 68,73-75,104-107
  - Differential 68,73-75

Automated
- Valves 384-400,404-412,414-417

Averaging
- Flow Grid 210
- Flow Sensors 210-211
- Pitot Tubes 262-263
- Temperature Sensors/Clips 138

PAGE

B

Backflow Prevention
- Valves 429

BACnet Communication
- Air Velocity Transmitter
  - Duct Mount 215-217
- BTU Meter 294
- Carbon Dioxide Temperature and Relative Humidity 228
- Nitrogen Dioxide 231
- Pressure Transmitters 70
- Room Status Monitor 61
- Ultrasonic Energy Meter 294

Ball Valves
- Actuators 416-417
- Automated 384-400,404-412
- Mini 403
- Three-Way 404-412
- Two-Way 384-403

Bayonet Thermocouples **144**
Bimetal Thermometers **114,116**
Bin Level Switches **323-327**
Bin Vibrators **340**
Block Manifolds **429,431-432**

Boiler
- Flow Switches 274
- Level Switches 128,318
- Temperature Switches 128

Bourdon Tube
- Pressure Gages 81
- Pressure Switches 88-89
- Temperature Switches 130

BTU Meter **294**
Bulk Head Connectors **428**

Butterfly Valves
- Actuators 416-417
- Automated 414-415
- Manual 413-415
- Two-Way 413-415

Button Data Loggers **199**

C

Cable Level Switches **319**
Calibration Pumps **192-195**

Capacitive
- Level Switches 321-322
- Level Transmitters 332

Capsu-Photohelic® **41**
Capsuhelic® **31,41**
Capture Hood **162**

Carbon Dioxide
- BACnet Communication 228
- Indicators 178
- Modbus® Communication 228
- Sensors 178
- Transmitters 226-227,229
  - Indicating 226-228

Carbon Monoxide
- BACnet Communication 231
- Modbus® Communication 231
- Transmitters 231-232

CFM Gages **20-21,25,34-36**
Chamber Level Switches **318**
Check Valves **428-429**
Chemical Control Manifolds **431-432**

Communication
- HART® Software 105

Compact USB Data Logger **196**
Compact USB Data Logger with Display **200**

Connectors
- Bulk Head 428

Continuity Controls **367**
Continuous Cleaning Timer Controllers **370-373**
Control Valves 416-417,420-421
- Actuators 416-417

Controllers
- Dust Collection 370-373
- Electro-Pneumatic 439
- Flow 338,352
- Grounding 367
- Level 336-338,352
- Mass Flow 297-298
- Process 117-121,124
- Pump 336-338,352
- Refrigeration 124,126
- Relative Humidity 220
- Temperature 117-129
- Valves 439

Counters **364**

Current
- Switches 356-358
- Transformers 359

Current to Pressure Transducers **439-441**
Current/Voltage Signal Generator **191**

D

Dampers
- Position Indicators/Switches/Transmitters 433-438

Data Acquisition **196-199**

Data Loggers
- Button 199
- Flow 188,286,288
- Pressure 197
- Temperature 196-200
- USB 196,199-200
- Wireless 200

Detectors
- Leak 308
- Occupancy 234
- Particulate 374
- Plugged Shoot 326-327
- Position 438
- Water 308

Dew Point
- Transmitters 221

DH3 Digihelic®
- Mounting 36

Diaphragm Seals
- Pressure Switches 88-90

Diaphragm Valves **426-427**

Differential Pressure
- Alarms 45
- Gages 20-21,24-27,31-36
- Indicating Transmitters 34-36,60-64,66-68,70,73-77,80-81
  - Pressure Transmitters
    - Differential 62-64
- Indicators 20-21,24-30,32-33,165-167,171-174,176-177,179-180
- Switches 45-57
- Switches/Gages 34-44
- Transmitters 34-36,58-61,63,66-67,73-81
  - Diaphragm Seals 73-75
  - Indicating 34-36,60-61,63,66-68,70-71,73-81

Digihelic Links™ **33**
Digihelic® Controllers **33-37**
- Software 33

DigiMag® **25**

Digital
- Gages 82-85
- Indicating
  - Meters
    - Panel 338,349-352
  - Pressure Switches 34-44,85-87
  - Pressure Transmitters 34-37,60-61,63,66-68,70-71, 73-75,85-87,100-107
  - Temperature
    - Controllers 117-121
    - Switches 123,127-128
- Indicators 349,531-352
- Manometers 165-167,171-174,176-177
- Panel Meters 141,338,349-352
- Pressure Gages 82-84
  - DigiMag® 25
- Temperature Switch Configuration Key 129

PAGE

Timers 364,369-373
DIN
Control Enclosures 339
Displacer
Level Switches 320
Displays 141,338,348-352
Disposable In-Line Filter 448
DPDT Low Differential Pressure Switches 52
Draft
Pressure Gages 20-21
Drain
Pan Level 308
Drip Pan Level 308
Duct Mount
Humidity Transmitters 223,255
Pressure Transmitters 70-71
Temperature Sensors 135
Duotect® Switches 92
Duplexing Pump Controllers 336-338,352
Durablock® Gage/Manometers 29-30,181
Durablock® Solid Plastic Portable Gages 181
Dust Collector
Timer Controls 369-373
Valves 426-427

E

Electric
Actuator 416-417
Ball Valves 384-400,404-412
Butterfly Valves 414-415
Electromagnetic
Flow Transmitters 291
Electromechanical Relays 354
Enclosures
Controllers 339
Panel Meter 349
Solenoid Valves 368,425
Energy Meter 294
Explosion-Proof
Ball Valves 384-400,404-412
Butterfly Valves 414-415
Current to Pressure Transducers 441
Differential Pressure Control 37,40,43
Differential Pressure Gage 24
Differential Pressure Switches 46,48,50,54-57
Differential 50
Differential Pressure Transmitter 68,70,73-75,77
Flow Switches 270-273
Humidity Transmitters 226
Level Switches 309-310,313,318,320,324-327
Position Indicators/Switches/Transmitters 433-436
Pressure Switches 88-92,94
Pressure Transmitters 102,104-107
Temperature Switches 130
Temperature Transmitters 133,226
Thermostats 130
Extension Cables for Temperature Sensors 148

PAGE

F

Filters 20-21,25,29,33,246-248,250-251,448,454
Accessories 454
Gages 20-21,25,29,33
Fittings
Accessories 454
Bulk Head Connectors 428
Saddle 291
Flame-Proof
Differential Pressure Control 37,40,43
Differential Pressure Gage 24
Differential Pressure Switches 46,48,50
Differential Pressure Transmitter 68
Low Differential Pressure Switches 48,50
Switches/Gages 40,43
Flex-Tube® Manometers 30
Float Level Transmitters 333
Float Switch 309-319
Flotect® Switch 309-312,270-275
Flow 235-298
Applications 242-244
Controllers 297-298
Data Loggers 188,286,288
Energy Meter 294
Flow Switches
Thermal 276
Flow Transmitters
Electromagnetic
Remote Display 293
Thermal Energy 292-293
Ultrasonic 289
Indicators 267-269,280-285
Switch Output 280-285
Transmitter Output 280-285
Magnetic Inductive
Flow Sensor 290
Mass Flowmeters 295-296
Meters 188,246-266,278,282-289,294,297-298
Digital 188,286-289
Fluoropolymer 254
Glass 255-257
In-Line 249,252-254,257-260,262-265
Magnehelic® 261
Mass 297-298
Polycarbonate 246-247,253,258
Polysulfone 252,258
Purge 246-251
Rotatable Scale 257
Switch Output 278
Transmitter Output 278,294,297-298
Ultrasonic 188,286-288,294
Variable Area 246-257,266
Multi-Jet
Water Meters 282-285
Multitube
Variable Area 248
NSF 285
Orifice Plates 264-265
Pipe Fittings 291
Sensors 261-265,278-285,290-291,294
Electromagnetic
Insertion 291
In-Line 262-263
Magnetic Inductive 290
Switches 270-276,278,280-281
Paddle 270-276
Technical Information 245
Totalizers 281-289
Transducers
Electromagnetic 291
In-Line 278,280-281,290
Indicating 280-281
Insertion 279,291
Paddlewheel 279-281
Ultrasonic 188,286-289,294
Transmitters
Electromagnetic 291

PAGE

In-Line 278,280-281,290
Indicating 280-281
Insertion 279,291
Paddlewheel 279-281
Thermal 277
Ultrasonic 188,286-288,294
Flow Control
Actuators 416-417
Valves 384-415,418-423,428-432
Flow Indicators/Controllers 338,352
Flow Sensor 262-263
Flow Stations 206-209
Flow Switches
Thermal 276
Flow Totalizers 281-285,338,352
Transducers 281
Transmitters
In-Line 281
Indicating 281
Flow Transmitters
Electromagnetic
Thermal Energy 292-293
Ultrasonic
Thermal Energy 289
Fluid Control
Actuators 416-417
Valves 384-415,418-432
Fume Hood Monitors 212

G

Gage Fluid 455
Gage Guards 450
Gage/Switches-Dial 20-44
Gages
Air Filter 20-21,25-30
Air Velocity 20-21,181-182,218-219
Dial 20-21,26-27,31-32,81
Differential Pressure 20-33,165-167,171-174,176-177,179-180
Digital 25,34-37,82-85,165-167,171-174,176-177
Draft 20-21,28-30,172,179-180
Low Pressure 20-21
Piston Type 32
Temperature 114-116
Galvanic Barrier 366
Gas Analyzers 178
Gas Detectors
Carbon Dioxide 226-229
Duct Mount 229
Wall Mount 229
Carbon Monoxide 231-232
Nitrogen Dioxide 231
Smoke 233
Gas Mass Flow 297-298
Gas Pressure
Kits 180
Switches 54
Globe Valves 418-421,430
Glossary 456-457
Ground Control 367

PAGE

H

Hand Pump 192,194-195
Pneumatic 192,194
Handheld Instruments
Air Quality 164-165,178
Air Velocity 164-165,169-171,182,186
Calibrators 191,193
Humidity 164,168,178
Pressure 165-167,171-174,176-177
HART®
Communication Software 105
Position Indicators/Switches/Transmitters 434-436
Positioners 444
Pressure Transmitters 73-75,104-107
Hazardous Rated
Actuators 416-417
Ball Valves 384-400,404-412
Butterfly Valves 414-415
Current to Pressure Transducers 439-441
Differential Pressure Switches 41,47,49,54-57
Flow Switches 270-273
Humidity Transmitters 226
Level Switches 309-310,313,318,320,325-327
Level Transmitters 328,330,334
Particulate
Transmitters 374
Position Indicators/Switches/Transmitters 433-436
Pressure
Switches 47,49,88-92,94
Transmitters 66,73-77,102-108
Temperature
Switches 130
Transmitters 133
Thermostats 130
Hermetically Sealed 54,88-91,114,274,280,282-285,450
Contacts 313
Reed Switch 312,314,438
Snap Switch 318,320
Switches 434-436
Hi-Flow™ 420-421
Hosing
Accessories 453
Humidistat 220
Humidity
Accessories
Radiation Shield 224
Controllers 220
Handhelds 164,168,178
Indicators 197-198
Loggers/Recorders 196-200
Radiation Shield 224
Switches 220
Transmitters 221-229
Duct Mount 223
Indicating 221,223,226
Remote Mount 224-225
Wall Mount 221-222,229
HVAC
Ball Valves 412
Flow
Alarms 212
Mobile Application 165
Sensor
Transmitters 222,232
Temperature 131
Hydraulic
Calibration Hand Pump 194
Valves 413
Hydronic Manometer
Water Meter 166-167,177
Hygrometers 164,168

PAGE

I

I to P **439-441**
Immersion
- Temperature Sensors 135-136

Indicating
- Pressure Transmitters 34-36,73-75,78,81,100-101

Indicators
- Air Flow 246-260,266,268-269
- Air Velocity 186-187,212,218
- Annunciators 353
- Differential Pressure 20-33,165-167,171-174,176-177,179-181
- Flow 338,352
  - In-Line 258,260
  - Sight Flow 267-269
  - Totalizers 283-285
  - Ultrasonic 188,286-289,294
  - Variable Area 246-257
- Flow Totalizers 283
- Level 307-308,338,352
- Position 433-438
- Process 141,338,348-353
- Relative Humidity 141,220
- Sight Flow 268-269,280-281
- Temperature 114-116,125,141
- Variable Area 246-257
- Water Leak 308
- Wind Speed 186-187

Indoor Air Quality
- Carbon Dioxide and Temperature Transmitters 227-229
- Carbon Dioxide and Volatile Organic Compound (VOC)
  - Duct Mount 229
  - Wall Mount 229
- Carbon Monoxide Transmitters 231-232
- Humidity Transmitters 221-224
- Nitrogen Dioxide Transmitters 231
- Smoke 233
- Smoke Detection 233
- Smoke Sensor 233

Intrinsically Safe
- Barriers 365-366
- Current to Pressure Transducers 439-441
- Humidity Transmitters 226,366
- Isolators 365-366
- Level Transmitters 328,330
- Particulate Sensors 374
- Position Indicators/Switches/Transmitters 434-436
- Pressure Transmitters 66,76,108

IR Sensor
- Temperature 141

K

Kits
- Air Filter Gage/Switch 455
- Air Velocity 164-165,171-172,175,181-182,187
- Combustion 189
- Portable Gage 20-21,172,180-182
- Tachometer 190

L

LCD
- Data Loggers 196-200
- Indicators 350
- Pressure Data Loggers 197

Leak Detectors
- Gas 189
- Particulate 374
- Water 308

Level **299-340**
- Applications 304-305
- Bin Vibrators 340
- Controllers 336-338
- Indicators 306-308
- Multi-Point 312,315-317
- Sensors 309-325,328-335
- Switches 309-314,326-327
  - Bin Level 321-325
  - Capacitive 321-322
  - Chamber Type 318
  - Diaphragm 326-327
  - Displacer 320
  - Float 309-319
  - Multi-Point 312,315-317,320
  - Optical 320
  - Paddle 324-325
  - Powder and Bulk 321-327
  - Tuning Fork 323
  - Vibrating Rod 322
- Transducer 328-335
- Transmitters
  - Capacitive 332
  - Float 333
  - Indicating 334-335
  - Submersible 328-331
  - Ultrasonic 334-335
- Water Detectors 308

Level Indicators **306-308**

Lift Station
- Level Switches 319
- Level Transmitters 330-331
- Pump Controls 336-338,352

Limit Controls **122**

Limit Switches
- Differential Pressure 34-36,45,47,49,51-57
- Flow 270-278
- Gas Pressure 54
- Level 309-327
- Pressure 45,47,49,51-57,85-96
- Temperature 122-123,127,130

Lin-E-Aire® **420-421**

Liquid Level
- Controllers 336-337
- Indicators 306-308,267
- Switches 309-321
- Transmitters 328-335

Liquid/Particle Filter **448**

Low Pressure Calibration Pumps **195**

M

Magnehelic® **20-23,67**
- Mounting 23
- Options 20-22

Magnesense® **70-71**

Manifold
- 1-Valve 429
- 2-Valve 431
- 3-Valve 431
- 5-Valve 432

Manometers
- Digital Handheld 165-167,171-174,176-177
- Fluid Filled
  - Gage Fluid 455
  - Inclined 28-30
  - Inclined/Vertical 28-30,180
  - Portable 28,30,179-180
  - U-Tube 179-180
  - Well-Type 30
- Hydronic 166-167,177
- Inclined 30
- Inclined/Vertical 30

Mark
- Position Indicators/Switches/Transmitters 434-436

Mass Flowmeters and Controllers **297-298**

Meters
- Indoor Air Quality 164,178
- Tachometer 190

Mineral Insulated Temperature Sensors **143**

Mini View Rite **307**

Mini-Master® Flowmeter **250-251**

Mini-Node™ **361**

Mini-Photohelic® **44**

Minihelic® II **26-27**

PAGE

Mobile Application
HVAC 165
Modbus® Communication 34-35,70,117-121,124,228,231,336-337
Air Velocity Transmitter
Duct Mount 215-217
Carbon Dioxide Temperature and Relative Humidity 228
Carbon Monoxide 231
Temperature/Process Controller 117-121,124
Monitors
Indoor Air Quality 178
Room Status 20-23,61,63
Mounting Brackets 23,138,455
Multi-Jet Water Meters 282-285

N

Needle Valves 429
Nitrogen Dioxide
BACnet Communication 231
Modbus® Communication 231
Transmitters 231
Non-Contact
Temperature Sensor 141
NSF
Flow 285
NSF Approved 282
Null Switches 52

O

Occupancy Sensors
Omnidirectional 234
Oil Controls
Manifold 429,431-432
One-Touch® 58
Open Channel Flow 338,352
Optical
Level Switches 320
Orifice Plates 264-265
Outside Air
Humidity Radiation Shield 224
Humidity Transmitters 223-224

P

Paddle
Level Switches 324-325
Powder and Bulk 324
Paddlewheel Transmitters 279
Panel Meters 338,348-352
Parameter Configuration Key 129
Particulate
Transmitters 374
Penetration Probe Temperature Sensors 145
Photohelic® 38-43
Pipe Fittings 291
Pitot Tubes 183-185,262-263
Averaging 168,210-211
Pneumatic
Actuators 416-417
Ball Valves 384-400,404-412
Butterfly Valves 414-415
Calibration Hand Pumps 193-194
Conveying
Timer Boards 369-373
Fittings 454
Hand Pumps 192,194
Pocket Wind Meters 186
Position
Indicators 433-438
Sensors 433-438
Switches 433-438
Transmitters 433-436
Positioners
Electro-Pneumatic 442
Linear 442,444
Pneumatic 442

PAGE

Rotary 442
Powder and Bulk
Level Switches 321-327
Level Transmitters 332
Power
Supplies 360-362
Transformers 360-362
Precisor® II 442
Pressure 1-68,70-108
Applications 16-17
BACnet 70
Calibrators 165-167,171-172,174,176-177,192-195
Controllers 34-37,87,446
Data Loggers 196-197
Data Logging Software 33
Differential
Gages 20-33
Switches 34-57
Transmitters 58-61,63,66-68,70-71,73-81
Digihelic Links™ 33
Indicating Switches 85-87
Indicating Transmitters 34-36,60,63,66-68,70-71,73-75, 85-87,100-107
Regulators 197,446
Single Pressure
Gages
Digital 82-85
Switch/Gages 85-87
Switches 85-96
Transmitters 84-87,96,98-108
Snubbers 451
Switches
Digital 34-37,85-87
Indicating 34-44,85-87
Null 52
Submersible 95
Two-Stage 53,88-89,92
Water Pump 96
Transducers 60-61,63,66-68,70-71,73-81,86-103,108
Indicating 34-36,67-68,70-71,85-86,100-103
Sanitary 96
Transmitters 58-61,63,66,68,73-81,86-87,98-102,104-108
Indicating 34-36,67,70-71,85-86,100-103
Sanitary 96
Pressure/Temperature Data Logger 197
Process
Alarm Switch Modules 353
Controllers 117-122,124
Current Switches 356-357
Current Transformers 359
Data Loggers 196-199
Filter Gage 20-21,33
Loop Alarms 353
Panel Meters/Indicators 141,348-353
Particulate (Dust or Broken Bag) Transmitter 374
SSR Monitors 361
Switches 353,369-373
Alarm 353
Timer Boards 369-373
Vibration Transmitter 363
Process Control 341-376
Applications 346-347
Current Monitoring
Current Transformers 359
Current Transformers/Switches 357-358
Enclosures 375-376
Power Supplies 361-362
24 AC-24 DC 361-362
Transformers
120 VAC-24 VAC 360
Pulse Valves 426-427
Pump
Calibration 192-195
Controllers 336-338,352
Purge Meters 246-251

PAGE

Q

Quadraplex Pump Controllers **338,352**
Quick-View® **433**

R

Radiation Shield **224**
Rate-Master® Flowmeter **246-247,260**
Recorders **196-200**
Reference Tables **458-460**
Regulators **446**
Relative Humidity
- Controllers 220
- Indicators 220
- Switches 220
- Transmitters 221-226

Relays **354,361**
- Electromechanical 354

Remote Display **293**
Remote Mount
- Humidity Transmitters 225

RH
- Switches 220
- Transmitters 221-226

Room Status Monitor **61**
Rotometers **246-257**
RTD
- Duct Mount 135
- Immersion 135-136
- Outside Air 137
- Sensors 134-141,143-145
- Transmitters 132
- Wall Mount 134

S

SAE
- Valve 413

Sanitary
- Ball Valves 390-391,408-409
- Pressure Transmitters 96
- Temperature Sensors 145

Selection Guide
- Air Quality 202-203
- Flow 236-241
- Level 300-303
- Pressure 2-15
- Process Control 342-345
- Temperature 110-111
- Test, Adjust, & Balance 150-153
- Valves 378-381

Self-Acting Temperature Control Valves **418-419**
Sensors
- Air Flow 168,183-185,206-211,264-265
- Air Velocity 168,178,183-185,206-211,214, 218-219,262-265
  - Transmitters 214,218-219
- Broken Bag 374
- BTU
  - Transmitters 294
- Carbon Dioxide
  - Transmitters 226-229
- Carbon Dioxide and Volatile Organic Compound (VOC)
  - Duct Mount 229
  - Wall Mount 229
- Carbon Dioxide Temperature and Relative Humidity
  - BACnet Communication 228
  - Modbus® Communication 228
- Carbon Monoxide
  - BACnet Communication 231
  - Modbus® Communication 231
  - Transmitters 231-232
- Current
  - Switches 356-358
  - Transmitters 359
- Differential Pressure 45,47,49,51-57,60-61,63,66-68,70-71,73-81
  - Transmitters 60-61,63,66-68,70-71,73-81
- Flow 188,206-207,246-266,270-276,278-298
  - Meters 246-266
  - Switches 270-276,278,280
  - Transmitters 188,278-298
- Humidity
  - Transmitters 221-226
- HVAC
  - Occupancy 234
- Level 309-328
  - Switches 309-327
  - Transmitters 328-335
- Nitrogen Dioxide
  - BACnet Communication 231
  - Modbus® Communication 231
  - Transmitters 231
- Occupancy 234
- Particulate 374
- Position 433-438
- Pressure
  - Transmitters 34-36,79,96,98-108
- Smoke 233
- Smoke Detection 233
- Temperature
  - Ambient Air 134-141,143-148
  - Duct Mount 135
  - Immersion 135-136
  - IR 141
  - Non-Contact 141
  - Outside Air 137-138
  - RTD 134-141,143-146,148
  - Surface 139
  - Switch 129
- Thermocouple 140-141,143-146,148
- Thermowells 115,136,147
- Transducers 97,131-133,221-227,229
- Transmitters 131-133,221-227,229
- Volatile Organic Compound (VOC)
  - Duct Mount 229
  - Wall Mount 229
- Wall Mount 134

Shock and Vibration Resistant **51,108,354**
Shut-Off Valves **413**
Sight Flow
- Indicators 267-271,280-281
- Transmitters 280-281

Signal
- Conditioners 359,361
- Converters 361
- Generators 191

Single Pressure Gages
- Dial 81

Slack Tube® Manometer **180**
Smart Programmable Panel Meters **348-349**
Smoke Alarm **233**
Smoke Detection **233**
Software
- Digihelic® Controller 33
- HART® Communication 105

Solenoid Valves **368,422-425**
- Enclosures 368,425
  - Timer 368

Steam Control
- Manifolds 431-432
- Valves 420-421

Submersible
- Level Transmitters 328-331
- Pressure Switches 95
- Temperature Data Logger 198

Sump
- Level Switches 319

Surface Mount
- Temperature Sensors 139

Swing Vane Anemometer **187**
Switches
- Air Flow 214
- Bin Level 322-327
- Current 356-358

PAGE

Differential Pressure 34-57
Flow 270-276,278,280-281
Gas Pressure 54
Humidity 220
Level 308-327
Limit
Air Flow 212,214,270-273,276,278
Gas Pressure 54
Pressure 45-55,57,85,87-96
Temperature 122-123,127,129-130,353
Position 433-438
Refrigeration 124,126
Relative Humidity 220
Single Pressure 85-96
Temperature 122-123,125-130,353
Switches/Gages 34-44,85-87

T

Tachometers 190,364
Technical Information
Flow 245
Glossary 456-457
Reference Tables 458-460
Temperature Sensors 140
Valves 383
Temperature 109-148
Applications 112-113
Control Valves 418-419
Controllers 117-128
Rail Mount 124
Data Loggers 196-200
Handhelds 164-165,168-169,178,186
Indicators 114-128,141,350-353
Loggers/Recorders 196-200
Panel Meters/Indicators 350-351
Sensors 115,123,125,127-128,134-141,143-148,220
Ambient Air 137-138
Averaging 138
Averaging Sensor Clip 138
Duct 135
Extension Cables 148
Immersion 135-136
IR 141
Mineral Insulated 143
Non-Contact 141
Outside Air 137-138
Penetration 145
RTD 134-141,143-146,148
Sanitary 145
Surface 139
Thermistor 135-136
Thermocouple 141,143-145-146,148
Weatherproof 145
Thermowells 115,136,147
Wall Mount 123,125,127-128,134,220
Switches 116,122-130,220
Digital Indicating 128
Digital Panel Mount 122
Indicating 116,122-128
Limit 123
Thermostat 130
Two-Stage 127
Temperature/Process Controller 117-121
Thermistors 134-137
Wall Mount 134
Thermometers
Dial 114
Digital 188
Glass 115
Remote Reading 116
Thermowells 115,136-147
Transmitter Output 116
Thermostats 130
Transmitters 131-133,214,221-226
Indicating 116
Weatherproof 132

PAGE

Weatherproof (NEMA 4) 131
Wire 142
Temperature Wire
Type J 142
Type K 142
Test, Adjust, & Balance 149-200
Air Quality 163-165,168,178,189
Air Velocity 163
Applications 154-155
Calibrators 191,193-195
Kits 163-165,175,180-182,186-187,189
Air Velocity 164,175,181-182,186-187
Gas Pressure 180,189
Portable Gage 181-182
RH 164
Universal Handheld 164-165
Leak Detectors
Gas 189
Manometer
Digital 163
Meters 163
Mobile Application 163,165
Pitot Tubes 168,183-184
Pumps 192,194-195
Temperature 188
Thermohygrometers 164,168
Ultrasonic Thickness Gage 287
Testers 191
Themocouple Wire
Extension 142
Thermal Energy 289,292-293
Thermistors
Averaging 138
Duct Mount 135
Immersion 135-136
Outside Air 137
Surface Mount 139
Wall Mount 134
Thermo-Anemometers 164-165,169-170
Thermocouple Wire
FEP 142
Fiberglass 142
General Purpose 142
Type J 142
Type K 142
Thermocouples 132,139-146,148
Extension 142
Transmitter 132
Thermohygrometers 164-165,168,178
Thermometers
Dial 114
Glass 115
Thermostat 130
Thermowells 115,136,147
Timer Boards 369-373
Timer Controllers 369-373
Timers 364,368
Totalizing Meters
Flow 281-285,338,352
Toxic Fluids Control
Manifold 431-423
Trademarks 461
Transducer
Current to Pressure 439-441
Electro-Pneumatic 439
Transformers 356,359-360
AC Power 360
Current 359
Transmitters
Air Velocity 218-219
Carbon Dioxide 226-229
Carbon Dioxide and Temperature 227-229
Carbon Dioxide and Volatile Organic Compound (VOC)
Duct Mount 229
Wall Mount 229
Carbon Dioxide Temperature and Relative Humidity 228-229
Carbon Monoxide 231-232

PAGE

Differential Pressure 35-37,58-61,63,66-67,70-71,73-81
Paddlewheel 34
Differential Pressure Transmitter 68
Flow 188,278-291,294,297-298
Humidity 222-229
Duct Mount 223
Indicating 221,226
Remote Mount 225
Wall Mount 221-222
Humidity and Temperature 221-229
Level 329-335,328
Nitrogen Dioxide 231
Particulate 374
Position 433-436
Pressure 34-36,79,96,98-102,108
Indicating 85-86,100-101,104-107
Smart
Pressure 103-107
Temperature 131-133,221-227
Indicating 116
Wall Mount 131
Vibration 363
Volatile Organic Compound (VOC)
Duct Mount 229
Wall Mount 229
True RMS Current Transformer 359
Tubing
Accessories 453
Tuning Fork
Level Switch 323

U

U-Tube Manometers 179-180
Ultra-Mag™ 326-327
Ultra-View™ Flowmeter 252
Ultrasonic
Flowmeters 188,286-289,294
Level
Transmitters 334-335
Ultrasonic Thickness Gage 287

V

Valves 377-446
Actuated 384-391,400,404-412
Two-Piece 384-387
Actuators 416-417
Applications 382
Ball 384-412,416-417
Automated 384-400,404-412,416-417
Flanged 392-393,398-399,410-411
Manual 384-399,401-411
Mini 403
NPT 384-389,396-397,401-402,404-407
Regulators and Lubricators 446
Socket Weld 394-395
Sweat 402
Three-Piece 388-391,394-397
Three-Way 404-412
Tri-Clamp 390-391,408-409
Two-Piece 384-387,392-393,398-399,401
Two-Way 384-402
Uni-Flange 402
V-Ball 396-402
Butterfly
Automated 414-417
Lug 414-415
Manual 414-415
Two-Way 413-415
Wafer 414-415
Check 428-429
Control 418-421
Controllers 188,288
Current to Pressure Transducers 32-34,439-441
Diaphragm 426-427
Electric Actuated 384-400,404-412,414-415

PAGE

Enclosures 368,412,425
Globe 418-421,430
Manifold 429,431-432
Needle 429
Pneumatic Actuated 384-400,404-412,414-415,420-421
Repair Kit 417
Position Indicators/Switches/Transmitters 433-438
Positioners 442,444
Pulse 426-427
SAE 413
Solenoids 368,422-425
Strainer 430
Technical Information 383
Temperature Control 418-419
Volume Booster 445
Vaneometers™ 187
Variable Area
Flowmeters 246-257
Venturi Meter/Gage 261
Vibrating Rod
Level Switch 322
Vibration
Transmitters 363
Vibration Resistant 57,81,88-89,91-92,98-99, 262-263,413,429,437,441
Vibrators 340
View-Rite 306-307
Visi-Float® Flowmeter 248-249
Volatile Organic Compound (VOC)
Transmitters
Duct Mount 229
Wall Mount 229

W

Wall Mount
Carbon Dioxide and Temperature Transmitters 227-229
European 227
North American 227
Carbon Dioxide Transmitter
European 227-228
North American 227-228
Carbon Dioxide, Temperature and Relative Humidity
European 229
North American 229
Humidity and Temperature Transmitters 221
Humidity Transmitters 221
Occupancy Sensor 234
Temperature Sensors 134
Temperature Transmitters 131
Water
Control Manifold 431-432
Detectors 308
Meters 282-285
Pump Pressure Switches 96
Weatherproof Enclosures 339
Well Level Transmitter 329
Wet/Wet
Differential Pressure Switches 56-57
Differential Pressure Transmitters 73-75,77-81
WI-FI
Data Loggers 200
Wind Meters 186-187
Wind Speed Indicators 186-187
Wireless 164-165
Data Loggers 200
Position Indicators/Switches/Transmitters 434-436

Z

Zener Barriers 365

PRESSURE CONVERSION CHART

in/H2O	P.S.I.	in/Hg	mm/H2O	mm/Hg	kg/cm²	bar	mbar	Pa	kPa
.1	.0036	.0073	2.534	.1863	.0002	.0002	.2482	24.82	.0248
.2	.0072	.0146	5.067	.3726	.0005	.0005	.4964	49.64	.0496
.4	.0144	.0293	10.13	.7452	.0010	.0010	.9928	99.28	.0993
.6	.0216	.0440	15.20	1.118	.0015	.0015	1.489	148.9	.1489
.8	.0289	.0588	20.34	1.496	.0020	.0020	1.992	199.2	.1992
1.0	.0361	.0735	25.41	1.868	.0025	.0025	2.489	248.9	.2489
2	.0722	.1470	50.81	3.736	.0051	.0050	4.978	497.8	.4978
3	.1083	.2205	76.22	5.604	.0076	.0075	7.467	746.7	.7476
4	.1444	.2940	101.62	7.472	.0102	.0099	9.956	995.6	.9956
5	.1804	.3673	127.0	9.335	.0127	.0124	12.44	1244	1.244
6	.2165	.4408	152.4	11.203	.0152	.0149	14.93	1493	1.493
7	.2526	.5143	177.8	13.072	.0178	.0174	17.42	1742	1.742
8	.2887	.5878	203.2	14.940	.0203	.0199	19.90	1990	1.990
9	.3248	.6613	228.6	16.808	.0228	.0224	22.39	2239	2.239
10	.3609	.7348	254.0	18.676	.0254	.0249	24.88	2488	2.488
11	.3970	.8083	279.4	20.544	.0279	.0274	27.37	2737	2.737
12	.4331	.8818	304.8	22.412	.0304	.0299	29.86	2986	2.986
13	.4692	.9553	330.2	24.280	.0330	.0324	32.35	3235	3.235
14	.5053	1.029	355.6	26.148	.0355	.0348	34.84	3484	3.484
15	.5414	1.102	381.0	28.016	.0381	.0373	37.33	3733	3.733
16	.5774	1.176	406.4	29.879	.0406	.0398	39.81	3981	3.981
17	.6136	1.249	431.8	31.752	.0431	.0423	42.31	4231	4.231
18	.6496	1.322	457.2	33.616	.0457	.0448	44.79	4479	4.479
19	.6857	1.396	482.6	35.484	.0482	.0473	47.28	4728	4.728
20	.7218	1.470	508.0	37.352	.0507	.0498	49.77	4977	4.977
21	.7579	1.543	533.4	39.22	.0533	.0523	52.26	5226	5.226
22	.7940	1.616	558.8	41.09	.0558	.0547	54.74	5474	5.474
23	.8301	1.690	584.2	42.96	.0584	.0572	57.23	5723	5.723
24	.8662	1.764	609.6	44.82	.0609	.0597	59.72	5972	5.972
25	.9023	1.837	635.0	46.69	.0634	.0622	62.21	6221	6.221
26	.9384	1.910	660.4	48.56	.0660	.0647	64.70	6470	6.470
27	.9745	1.984	685.8	50.43	.0685	.0672	67.19	6719	6.719
28	1.010	2.056	710.8	52.26	.0710	.0696	69.64	6964	6.964
29	1.047	2.132	736.8	54.18	.0736	.0722	72.19	7219	7.219
30	1.083	2.205	762.2	56.04	.0761	.0747	74.67	7467	7.467
31	1.119	2.278	787.5	57.91	.0787	.0772	77.15	7715	7.715
32	1.155	2.352	812.8	59.77	.0812	.0796	79.63	7963	7.963
33	1.191	2.425	836.2	61.63	.0837	.0821	82.12	8212	8.212
34	1.227	2.498	863.5	63.49	.0862	.0846	84.60	8460	8.460
35	1.263	2.571	888.9	65.36	.0888	.0871	87.08	8708	8.708
36	1.299	2.645	914.2	67.22	.0913	.0896	89.56	8956	8.956
37	1.335	2.718	939.5	69.08	.0938	.0920	92.04	9204	9.204
38	1.371	2.791	964.9	70.95	.0964	.0945	94.53	9453	9.453
39	1.408	2.876	990.9	72.86	.0990	.0971	97.08	9708	9.708
40	1.444	2.940	1016	74.72	.1015	.0996	99.56	9956	9.956
41	1.480	3.013	1042	76.59	.1040	.1020	102.0	10204	10.20
42	1.516	3.086	1067	78.45	.1066	.1045	104.5	10452	10.45
43	1.552	3.160	1092	80.31	.1091	.1070	107.0	10701	10.70
44	1.588	3.233	1118	82.18	.1116	.1095	109.5	10949	10.95
45	1.624	3.306	1143	84.04	.1142	.1120	112.0	11197	11.20
46	1.660	3.378	1168	85.90	.1167	.1144	114.5	11445	11.44
47	1.696	3.453	1194	87.76	.1192	.1169	116.9	11694	11.69
48	1.732	3.526	1219	89.63	.1218	.1194	119.4	11942	11.94
49	1.768	3.600	1244	91.49	.1243	.1219	121.9	12190	12.19
50	1.804	3.673	1270	93.35	.1268	.1244	124.4	12438	12.44
51	1.841	3.748	1296	95.27	.1294	.1269	126.9	12693	12.69
52	1.877	3.822	1321	97.13	.1320	.1294	129.4	12941	12.94
53	1.913	3.895	1346	98.99	.1345	.1319	131.9	13190	13.19
54	1.949	3.968	1372	100.8	.1370	.1344	134.4	13438	13.44
55	1.985	4.041	1397	102.7	.1395	.1369	136.9	13686	13.69
56	2.021	4.115	1422	104.6	.1421	.1393	139.3	13934	13.93
57	2.057	4.188	1448	106.4	.1146	.1418	141.8	14182	14.18
58	2.093	4.261	1473	108.3	.1471	.1443	144.3	14431	14.43
59	2.129	4.335	1498	110.2	.1497	.1468	146.8	14679	14.68
60	2.165	4.408	1524	112.0	.1522	.1493	149.3	14927	14.93
61	2.202	4.483	1550	113.9	.1548	.1518	151.8	15182	15.18
62	2.238	4.556	1575	115.8	.1573	.1543	154.3	15430	15.43
63	2.274	4.630	1600	117.7	.1599	.1568	156.8	15679	15.68
64	2.310	4.703	1626	119.5	.1624	.1593	159.3	15927	15.93
65	2.346	4.776	1651	121.4	.1649	.1618	161.8	16175	16.18
66	2.382	4.850	1676	123.3	.1674	.1642	164.2	16423	16.42
67	2.418	4.923	1702	125.1	.1700	.1667	166.7	16672	16.67
68	2.454	4.996	1727	127.0	.1725	.1692	169.2	16920	16.92
69	2.490	5.070	1752	128.8	.1750	.1717	171.7	17168	17.17
70	2.526	5.143	1778	130.7	.1776	.1742	174.2	17416	17.42
71	2.562	5.216	1803	132.6	.1801	.1766	176.6	17664	17.66
72	2.598	5.290	1828	134.4	.1826	.1791	179.1	17912	17.91
73	2.635	5.365	1854	136.4	.1852	.1817	181.7	18168	18.17
74	2.671	5.438	1880	138.2	.1878	.1842	184.2	18416	18.42
75	2.707	5.511	1905	140.1	.1903	.1866	186.6	18664	18.66
76	2.743	5.585	1930	141.9	.1928	.1891	189.1	18912	18.91
77	2.779	5.658	1956	143.8	.1954	.1916	191.6	19160	19.16
78	2.815	5.731	1981	145.7	.1979	.1941	194.1	19409	19.41
79	2.851	5.805	2006	147.5	.2004	.1966	196.6	19657	19.66
80	2.887	5.878	2032	149.4	.2030	.1991	199.1	19905	19.90
81	2.923	5.951	2057	151.2	.2055	.2015	201.5	20153	20.15
82	2.959	6.024	2082	153.1	.2080	.2040	204.0	20402	20.40
83	2.996	6.100	2108	155.0	.2106	.2066	206.6	20657	20.66
84	3.032	6.173	2134	156.9	.2131	.2091	209.1	20905	20.90
85	3.068	6.246	2159	158.8	.2157	.2115	211.5	21153	21.15
86	3.104	6.320	2184	160.6	.2182	.2140	214.0	21401	21.40
87	3.140	6.393	2210	162.5	.2207	.2165	216.5	21650	21.65
88	3.176	6.466	2265	164.4	.2233	.2190	219.0	21898	21.90
89	3.212	6.450	2260	166.2	.2258	.2215	221.5	22146	22.15
90	3.248	6.613	2286	168.1	.2283	.2239	223.9	22394	22.39
91	3.284	6.686	2311	169.9	.2309	.2264	226.4	22642	22.64
92	3.320	6.760	2336	171.8	.2334	.2289	228.9	22890	22.89
93	3.356	6.833	2362	173.7	.2359	.2314	231.4	23139	23.14
94	3.392	6.906	2387	175.5	.2384	.2339	233.9	23387	23.39
95	3.429	6.981	2413	177.4	.2410	.2364	236.4	23642	23.64
96	3.456	7.055	2438	179.3	.2436	.2389	238.9	23890	23.89
97	3.501	7.128	2464	181.2	.2461	.2414	241.4	24138	24.14
98	3.537	7.201	2489	183.0	.2486	.2439	243.9	24387	24.39
99	3.573	7.275	2514	184.9	.2512	.2464	246.4	24635	24.64
100	3.609	7.348	2540	186.8	.2537	.2488	248.8	24883	24.88

P.S.I.	in/H2O	in/Hg	mm/H2O	mm/Hg	kg/cm²	bar	mbar	Pa	kPa
1.0	27.71	2.036	703.1	51.75	.0703	.0689	68.95	6895	6.895
1.1	30.45	2.240	773.4	56.89	.0773	.0758	75.84	7584	7.584
1.2	33.22	2.443	843.7	62.06	.0844	.0827	82.74	8274	8.274
1.3	35.98	2.647	914.0	67.23	.0914	.0896	89.63	8963	8.963
1.4	38.75	2.850	984.3	72.40	.0984	.0965	96.52	9652	9.652
1.5	41.52	3.054	1055	77.57	.1055	.1034	103.4	10340	10.34
1.6	44.29	3.258	1125	82.74	.1125	.1103	110.3	11030	11.03
1.7	47.06	3.461	1195	87.92	.1195	.1172	117.2	11720	11.72
1.8	49.82	3.665	1266	93.09	.1266	.1241	124.1	12410	12.41
1.9	52.59	3.686	1336	98.26	.1336	.1310	131.0	13100	13.10
2.0	55.36	4.072	1406	103.4	.1406	.1379	137.9	13790	13.79
2.1	58.13	4.276	1476	108.6	.1476	.1448	144.8	14480	14.48
2.2	60.90	4.479	1547	113.8	.1547	.1517	151.7	15170	15.17
2.3	63.67	4.683	1617	118.9	.1617	.1586	158.6	15860	15.86
2.4	66.43	4.886	1687	124.1	.1687	.1655	165.5	16550	16.55
2.5	69.20	5.090	1758	129.3	.1758	.1724	172.4	17240	17.24
2.6	71.97	5.294	1828	134.5	.1828	.1793	179.3	17930	17.93
2.7	74.74	5.497	1898	139.6	.1898	.1862	186.2	18620	18.62
2.8	77.51	5.701	1969	144.8	.1968	.1930	193.0	19300	19.30
2.9	80.27	5.904	2039	150.0	.2039	.1999	199.9	19990	19.99
3.0	83.04	6.108	2109	155.1	.2109	.2068	206.8	20680	20.68
3.1	85.81	6.312	2180	160.3	.2180	.2137	213.7	21370	21.37
3.2	88.58	6.515	2250	165.5	.2250	.2206	220.6	22060	22.06
3.3	91.35	6.719	2320	170.7	.2320	.2275	227.5	22750	22.75
3.4	94.11	6.922	2390	175.8	.2390	.2344	234.4	23440	23.44
3.5	96.88	7.126	2461	181.0	.2461	.2413	241.3	24130	24.13
3.6	99.65	7.330	2531	186.2	.2531	.2482	248.2	24820	24.82
3.7	102.4	7.535	2601	191.3	.2601	.2551	255.1	25510	25.51
3.8	105.2	7.737	2672	196.5	.2672	.2620	262.0	26200	26.20
3.9	108.0	7.940	2742	201.7	.2742	.2689	268.9	26890	26.89
4.0	110.7	8.144	2812	206.9	.2812	.2758	275.8	27580	27.58
4.1	113.5	8.348	2883	212.0	.2883	.2827	282.7	28270	28.27
4.2	116.3	8.551	2953	217.2	.2953	.2896	289.6	28960	28.96
4.3	119.0	8.775	3023	222.4	.3023	.2965	296.5	29650	29.65
4.4	121.8	8.958	3094	227.5	.3094	.3034	303.4	30338	30.34
4.5	124.6	9.162	2164	232.7	.3164	.3103	310.3	31030	31.03
4.6	127.3	9.366	3234	237.9	.3234	.3172	317.2	31720	31.72
4.7	130.1	9.569	3304	243.1	.3304	.3240	324.0	32400	32.40
4.8	132.9	9.773	3375	248.2	.3375	.3310	331.0	33100	33.10
4.9	135.6	9.976	3445	253.4	.3445	.3378	337.8	33780	33.78
5.0	138.4	10.18	3515	258.6	.3515	.3447	344.7	34470	34.47
5.1	141.2	10.38	3586	263.7	.3586	.3516	351.6	35160	35.16
5.2	143.9	10.59	3656	268.9	.3656	.3585	358.5	35850	35.85
5.3	146.7	10.79	3726	274.1	.3726	.3654	365.4	36540	36.54
5.4	149.5	10.99	3797	279.3	.3797	.3723	372.3	37230	37.23
5.5	152.2	11.20	3876	284.4	.3867	.3792	379.2	37920	37.92
5.6	155.0	11.40	3973	289.6	.3937	.3861	386.1	38610	38.61
5.7	157.8	11.60	4008	294.8	.4007	.3930	393.0	39300	39.30
5.8	160.5	11.81	4078	299.9	.4078	.3999	399.9	39990	39.99
5.9	163.3	12.01	4148	305.1	.4148	.4068	406.8	40680	40.68
6.0	166.1	12.22	4218	310.3	.4218	.4137	413.7	41370	41.37
6.1	168.8	12.42	4289	315.5	.4289	.4206	420.6	42060	42.06
6.2	171.6	12.62	4359	320.6	.4359	.4275	427.5	42750	42.75
6.3	174.4	12.83	4429	325.8	.4429	.4344	434.4	43440	43.44
6.4	177.2	13.03	4500	331.0	.4500	.4413	441.3	44130	44.13
6.5	179.9	13.23	4570	336.1	.4570	.4482	448.2	44820	44.82
6.6	182.7	13.44	4640	341.3	.4640	.4550	455.0	45500	45.50
6.7	185.5	13.64	4711	346.5	.4710	.4619	461.9	46190	46.19
6.8	188.2	13.84	4781	351.7	.4781	.4688	468.8	46880	46.88
6.9	191.0	14.05	4851	356.8	.4851	.4757	475.7	47570	47.57
7.0	193.8	14.25	4922	362.0	.4921	.4826	482.6	48260	48.26
7.1	196.5	14.46	4992	367.2	.4992	.4895	489.5	48950	48.95
7.2	199.3	14.66	5062	372.3	.5062	.4964	496.4	49640	49.64
7.3	202.1	14.86	5132	377.5	.5132	.5033	503.3	50330	50.33
7.4	204.8	15.07	5203	382.7	.5203	.5102	510.2	51020	51.02
7.5	207.6	15.27	5273	387.9	.5273	.5171	517.1	51710	51.71
7.6	210.4	15.47	5343	393.0	.5343	.5240	524.0	52400	52.40
7.8	215.9	15.88	5484	403.4	.5484	.5378	537.8	53780	53.78
8.0	221.4	16.29	5625	413.7	.5625	.5516	551.6	55160	55.16
8.2	227.0	16.70	5765	424.1	.5765	.5654	565.4	56540	56.54
8.4	232.5	17.10	5906	434.4	.5906	.5792	579.2	57920	57.92
8.6	238.0	17.51	6047	444.7	.6046	.5929	592.9	59290	59.29
8.8	243.6	17.92	6187	455.1	.6187	.6067	606.7	60670	60.67
9.0	249.1	18.32	6328	465.4	.6328	.6205	620.5	62050	62.05
9.2	254.7	18.73	6468	475.8	.6468	.6343	634.3	63430	63.43
9.4	260.2	19.14	6609	486.1	.6609	.6481	648.1	64810	64.81
9.6	265.7	19.54	6750	496.5	.6749	.6619	661.9	66190	66.19
9.8	271.3	19.95	6890	506.8	.6890	.6757	675.7	67570	67.57
10.0	276.8	20.36	7031	517.1	.7031	.6895	689.5	68950	68.95
11.0	304.5	22.40	7734	568.9	.7734	.7584	758.4	75840	75.84
12.0	332.2	24.43	8437	620.6	.8437	.8274	827.4	82740	82.74
13.0	359.8	26.47	9140	672.3	.9140	.8963	896.3	98630	89.63
14.0	387.5	28.50	9843	724.0	.9843	.9652	965.2	96520	96.52
14.7	406.9	29.93	10340	760.2	1.033	1.014	1014	101400	101.4
15.0	415.2	30.54	10550	775.7	1.055	1.034	1034	103400	103.4
16.0	442.9	32.58	11250	827.4	1.125	1.103	1103	110300	110.3
17.0	470.6	34.61	11950	879.1	1.195	1.172	1172	117200	117.2
18.0	498.2	36.65	12660	930.9	1.265	1.241	1241	124100	124.1
19.0	525.9	36.68	13360	982.6	1.336	1.310	1310	131000	131.0
20.0	553.6	40.72	14060	1034	1.406	1.379	1379	137900	137.9
21.0	581.3	42.76	14770	1086	1.476	1.448	1448	144800	144.8
22.0	609.0	44.79	15470	1138	1.547	1.517	1517	151700	151.7
23.0	636.7	46.83	16170	1189	1.617	1.586	1586	158600	158.6
24.0	664.3	48.86	16870	1241	1.687	1.655	1655	165500	165.5
25.0	692.0	50.90	17580	1293	1.758	1.724	1724	172400	172.4

CONVERSION FACTORS	
P.S.I. x 27.71 = in. H_2O	P.S.I. x .0689 = bar
P.S.I. x 2.036 = in. Hg	P.S.I. x 68.95 = mbar
P.S.I. x 703.1 = mm/H_2O	P.S.I. x 6895 = Pa
P.S.I. x 51.75 = mm/Hg	P.S.I. x 6.895 = kPa
P.S.I. x .0703 = kg/cm^2	

Note: Conversion factors rounded.

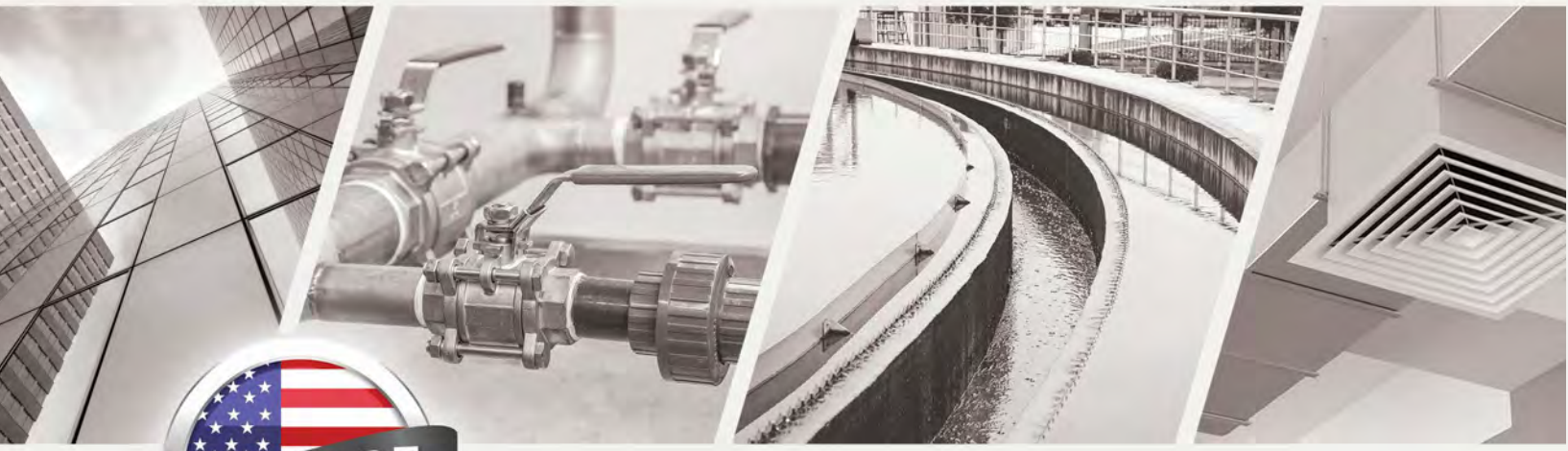

USA MADE

MANUFACTURING EXCELLENCE SINCE 1931

Pressure | Temperature | Test, Adjust, & Balance | Air Quality

Flow | Level | Process Control | Valves

Phone: (219) 879-8000 | Fax: (219) 872-9057

DWYER-INST.COM

©Copyright 2022 Dwyer Instruments, LLC | FR# 150000-00