Index

	Page
Introduction	2
Multi-Clamp System	3
Cutaway	4
Planning	5
Mounting Methods	6-7
Junction Adapters	8
Multi-Clamp Bulkhead Spacer	8
Junction Adapters	9
Clamping Unit	10
Clamping Unit with Outside Holes	10
Single Clamping Unit	11
Double Clamping Unit	11
Split Bushings for Tube & Pipe	11
Split Bushings for Hose	12
Mounting Adapters	13
Hydro-Strut	14
Strut-Adapter	15
Walker-Strut	16-17
Silent-Strut	18
Hydro-Clamp DISCONTINUED	19
Econo-Isolator	20

- Reduces line noise by as much as 80%
- Line sizes from 1/4" to 2" pipe
- Easy channel mounting installation
- High-quality materials of construction

- A rail mounted clamp with Multi-Clamp's ability to clamp the line at the fitting
- Installation is a snap - clamp, fitting, and cushion are all in one package

- Vibration and shock-free rail mounting
- Easily snap hose or tubing into elastomer cushion
- Space saving design

- Easy channel mounting installation
- Line sizes from 1/4" to 2" tube
- High-quality materials of construction
- Greatly reduces line noise

- Perfect for Mobile, Pneumatic, Hydraulic, Electrical, HVAC, Fuel Line
- Line sizes from 1/8" through 8"
- Interchangeable with other brands

- High-quality Styrene Butadiene Rubber
- Easy mounting using pipe straps
- Line sizes from 1/4" tube or pipe to 1-1/2" pipe or 2-1/8" tube

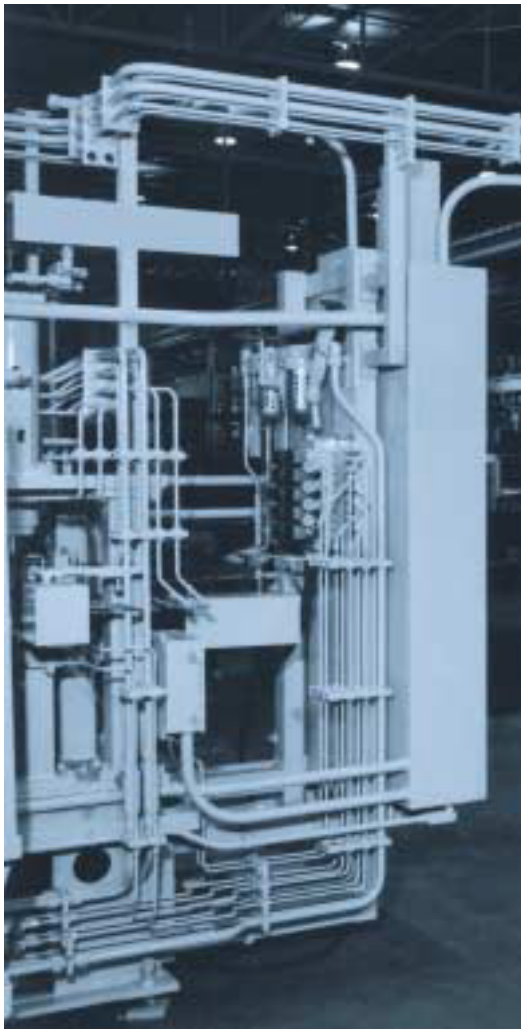

Special fittings, lower operating pressures, and fewer vibrating components may help prevent leaks; however, this is not the complete answer.

One of the most crucial requirements is to clamp the hydraulic lines and properly secure the fittings where leaks can occur. Unclamped hydraulic tubing will reverberate as does a tuning fork. Fluid velocity, pressure, and improper line size all contribute to high frequency vibration, shock, surge, and noise. Far more damaging is the resultant flexing and coldworking of tubing, particularly around couplings, resulting in split lines and fittings.

Now in our 66th year, Hydro-Craft is proud to present this catalog of six separate and unique clamping systems. 60 years ago, Hydro-Craft engineered and patented a system for clamping hydraulic lines and securing breakpoint fittings. This system is called the MULTI-CLAMP® and is the industry standard in clamped breakpoint systems.

Now, Hydro-Craft applies its expertise to include a full range of clamping systems, including the WALKER-STRUT® channel-mounted system, the only clamp in the world with this exclusive breakpoint feature. Also available are the HYDRO-STRUT®, SILENT-STRUT®, Econo-Isolator, and Strut Adapter channel mounting systems.

All systems are available in steel or 304 stainless steel. MULTI-CLAMP is also available in aluminum.

Strut-Adapter®, Hydro-Strut®, Silent-Strut®, and Walker-Strut®, are registered trademarks.

Multi-Clamp® System -
U.S. Patent No. 3,397,431 & 3,414,220
Weld Adapter® -
U.S. Patent No. 5,016,461
Strut-Adapter® -
U.S. Patent No. 4,934,635 & 4,997,148

HC-CC/01A
Copyright 2024 Hydro-Craft Inc.

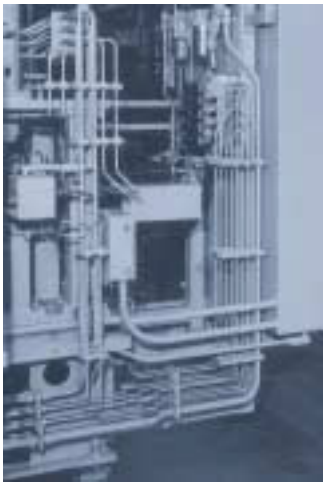

MULTI-CLAMP APPLICATIONS

The Multi-Clamp® System

The MULTI-CLAMP SYSTEM enables you to route single line runs, multiple runs of the same line diameters, or multiple runs of various diameters. Multiple line runs can be stacked to conserve space and make installations more rigid. Center line dimensions between all lines remain the same, both horizontal and vertical, when MULTI-CLAMPS are stacked. Mount an additional CLAMPING UNIT upon the existing MULTI-CLAMP and attach it by threading a thread adapter into the stacking nut. MULTI-CLAMPS are progressively built up this way with the last being secured by a standard bolt threaded into the STACKING NUT.

The MULTI-CLAMP SYSTEM provides definite reference for measuring . . . so important in laying out line runs. Quite an advantage over clamping devices that change center distance both vertically and horizontally with each change in line diameter. This advantage can be fully realized when stacking line runs, because with MULTI-CLAMP, both vertical and horizontal center line distances remain specifically designed to give you exact spacing and ease of installation.

MULTI-CLAMP is available in steel, stainless steel and aluminum. The standard bushing material is Styrene Butadiene.

Using the following charts, determine the series of MULTI-CLAMP required and the number of clamps required. Then refer to the dimensional data and mounting instructions on the following pages.

LINE SIZE	MULTI-CLAMP SERIES
3/16- THRU 3/4-INCH O.D.	HC-10
1/4- THRU 1-INCH O.D.	HC-16
3/8- THRU 2-INCH O.D.	HC-32
1- THRU 2-1/2-INCH I.D.	HC-46
2- THRU 4-INCH I.D.	HC-72
5- THRU 6-INCH I.D.	HC-96

RECOMMENDED SUPPORT CLAMP SPACING*

TUBE O.D.	APPROX. SPACE BETWEEN SUPPORTS
1/4-, 5/16-, 3/8-, 1/2- INCH	3-FEET
5/8-, 3/4-, 7/8-INCH	4-FEET
1-INCH	5-FEET
1-1/4-, 1-1/2-INCH	7-FEET
2-INCH & UP	7- TO 10-FEET

*From Fluid Power Handbook

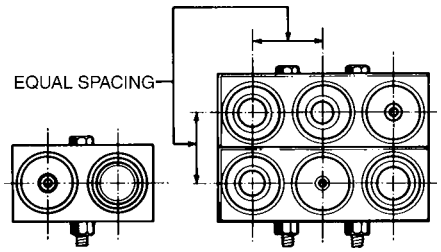

Multi-Clamp® Exploded View

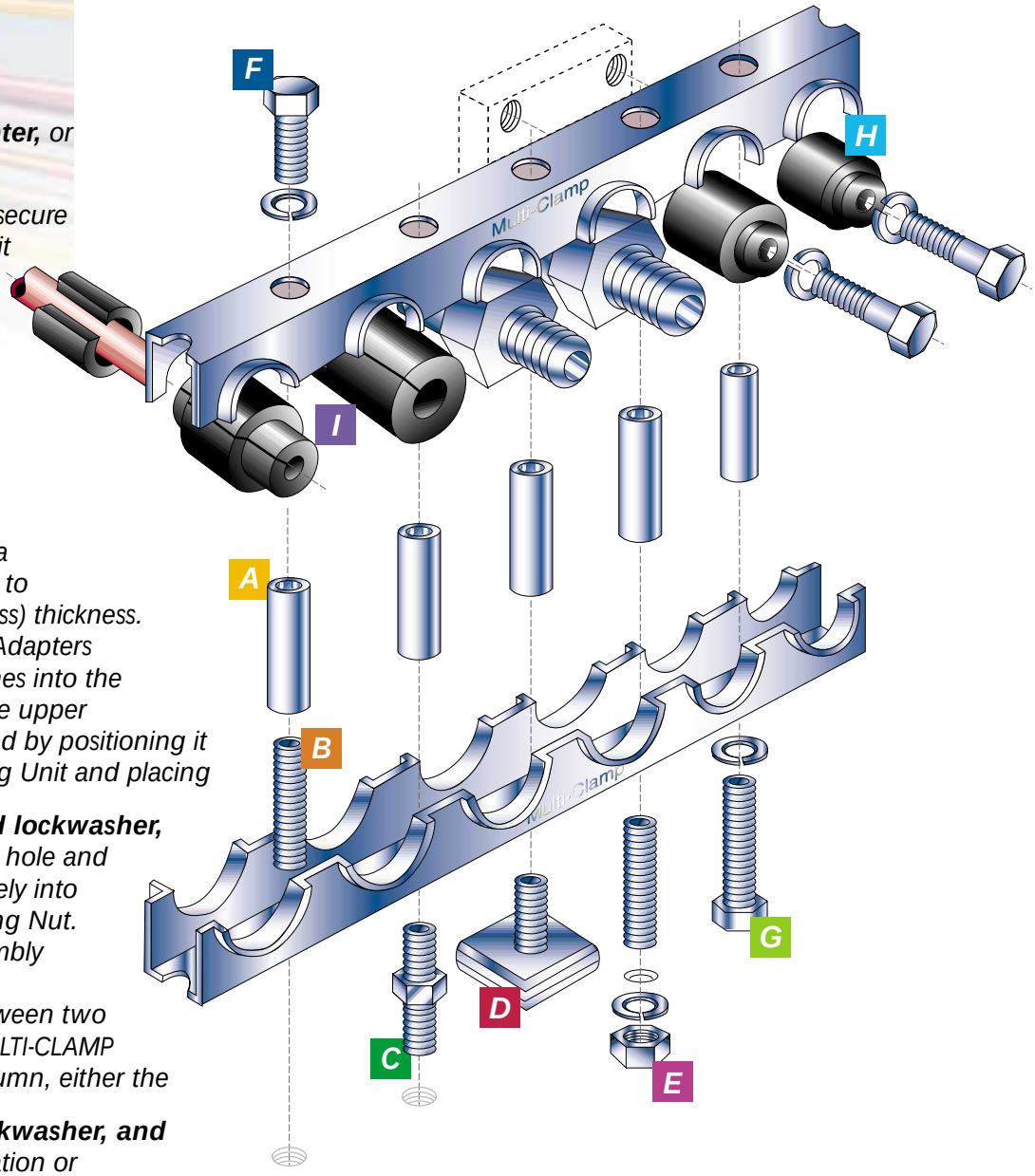

A ***Socket-head stacking nut,*** *is used in combination with either*

B ***a thread adapter,***

C ***a self-tapping adapter,*** *or*

D ***a weld adapter,*** *to secure the lower Clamping Unit directly to a mounting surface. The Stacking Nut is also used in combination with*

E ***a thread adapter, lockwasher, and standard nut*** *to attach the lower Clamping Unit through a drilled hole in mounting to a plate of 3/8 inch (or less) thickness. After inserting Junction Adapters or Split Bushings and Lines into the lower Clamping Unit, the upper Clamping Unit is attached by positioning it over the Lower Clamping Unit and placing*

F ***a standard bolt and lockwasher,*** *through each mounting hole and threading the bolt securely into its corresponding Stacking Nut. This completes the assembly of a basic MULTI-CLAMP. In bridge mounting between two columns, or when a MULTI-CLAMP is suspended from a column, either the*

E ***thread adapter, lockwasher, and standard nut,*** *combination or*

G ***a standard bolt and lockwasher,*** *can be used to secure the Stacking Nut to the lower Clamping Unit.*

H ***Mounting adapters*** *are placed into appropriate holes, the lines or Junction Adapters installed, the upper Clamping Unit attached, and the complete assembly then secured by the Mounting Adapters and standard bolts.*

I ***Split bushings*** *are placed into appropriate holes, available with or without ridge.*

PLANNING GUIDE

THE MULTI-CLAMP® SYSTEM PROVIDES FOR VISUAL PLANNING OF LINE INSTALLATIONS

This is a very important part of the total system. Line diameters and routes, bend angles, places and types of mounting, couplings, overhead suspension, and modulation of the installation with JUNCTION ADAPTERS can all be visually pre-planned.

The first step in planning is visually determining the most desirable route. You would want to avoid obstructions, moving parts, service openings, and complex contours. Plan around them. Then follow this procedure:

1. LINES AND DIRECTIONS

Determine the number of lines required and the directions they must go. Determine the maximum O.D. of the lines. This will enable you to select the proper CLAMPING UNIT series.

2. EXAMINE CHARACTERISTICS OF PRODUCT

If the product to be piped consists of more than one component . . . such as a machine tool with hydraulic and coolant tanks . . . plan with the JUNCTION ADAPTER. Remember each unit of the machine tool can then be easily separated at one MULTI-CLAMP® and just as easily reconnected.

3. ROUTING

First, consider routing the line runs along the base of the product, being cautious of the obstructions, moving parts, service openings, and contours previously mentioned. If these are prohibitive, consider attaching upright spars to the product for overhead runs, or routing the runs overhead in suspension.

4. INSTALLATION

Having determined the route, select the proper CLAMPING UNIT for the maximum O.D. of the required lines. Then, cut lengths to provide sufficient line openings.

Mount the lower CLAMPING UNIT. (Refer to mounting methods shown on pages 6-7.) An excellent feature of this system is the mounted CLAMPING UNIT becomes a reference point for measuring line runs . . . eliminates trying to measure "in-the-air".

Now, position the first line and use this line as a basic guide for measurement; merely add the center distance to the next line opening for the next line, and so on.

Add JUNCTION ADAPTER, when applicable, or slip appropriate sized SPLIT BUSHING over each line and seat into lower CLAMPING UNIT.

Position the upper CLAMPING UNIT and secure it to the lower CLAMPING UNIT. (Refer to exploded view.)

NOTE: If a large number of lines are to be run, the following procedure is recommended: Cut lower CLAMPING UNIT in lengths for total number of lines to be installed. Next, cut upper CLAMPING UNIT in lengths for 2 lines only. Installation is then completed by securing only two lines at a time as the run progresses.

Multi-Clamp®

SUGGESTED MOUNTING METHODS

Actual installation of a line run, using the MULTI-CLAMP SYSTEM, begins with the mounting of the lower Clamping unit. Various methods are available to the installer for securing the lower Clamping Unit to the machine base, pillar, upright spar, mounting plate, etc.

WELD ADAPTER

1. *Insert Weld Adapter into mounting hole of lower Clamping Unit.*

Secure Weld Adapter to lower Clamping Unit with socket head stacking nut (finger tight). Repeat Steps 1 and 2 for each hole of Clamping Unit.

Weld Adapter attached to lower clamping unit provides the basis of this method.

2. *Position assembled unit onto mounting surface.*

3. *Weld base of each Weld Adapter to mounting surface.*

4. *Tighten all Stacking Nuts securely and proceed with remainder of installation.*

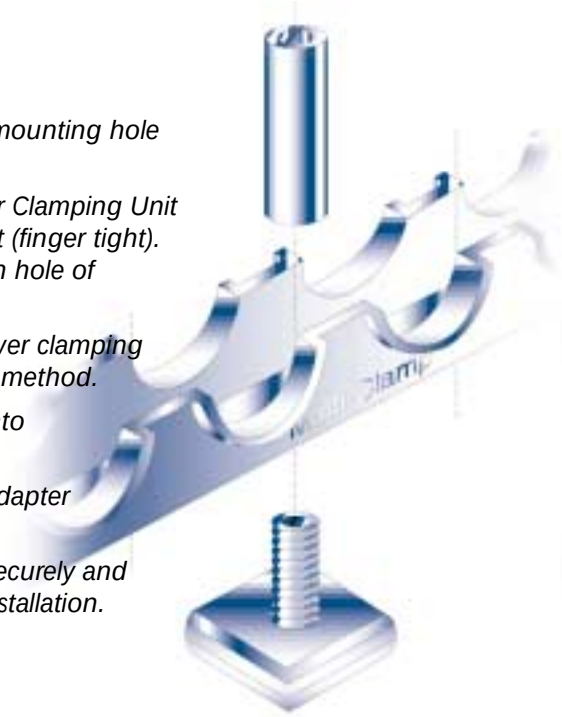

THREAD ADAPTER FOR TAPPED HOLE

1. *Using a scale, or the Clamping Unit itself, measure and mark location on mounting surface for each mounting hole on the lower Clamping Unit. Note that all mounting holes are spaced at even increments.*

2. *Drill appropriate size hole for the particular MULTI-CLAMP series being installed.*

3. *Using tapping tool, tap each hole with appropriate size thread for series being installed.*

4. *Assemble required number of Stacking Nuts and Thread Adapters for each mounting hole.*

5. *Position lower Clamping Unit over tapped holes and thread assembled Thread Adapter-Stacking Nut into each until finger tight.*

6. *Tighten all Stacking Nuts securely and proceed with remainder of installation.*

SELF-TAPPING ADAPTER

1. *Using a scale, or the Clamping Unit itself, measure and mark location on mounting surface for each mounting hole of the lower Clamping Unit. Note that all mounting holes are spaced at even increments.*

2. *Drill appropriate size hole for particular MULTI-CLAMP® series being installed.*

3. *Place Self-tapping Adapter into speed wrench and insert into each hole until seated securely.*

4. *Align lower Clamping Unit over Self-tapping Adapters and position by placing the Adapters through mounting holes.*

5. *Thread Stacking Nut onto each Self-tapping Adapter until finger tight.*

6. *Tighten all Stacking Nuts securely and proceed with remainder of installation.*

STANDARD BOLT, LOCKWASHER AND STACKING NUT FOR DRILLED HOLE

1. *Using a scale, or the Clamping Unit itself, measure and mark location on mounting surface for each mounting hole of the lower Clamping Unit. Note that all mounting holes are spaced at even increments.*

2. *Drill appropriate size hole for particular MULTI-CLAMP series being installed.*

3. *Position lower Clamping Unit over tapped holes. Place standard bolt and lockwasher through drilled hole and through lower Clamping Unit. Attach with stacking nut finger tight.*

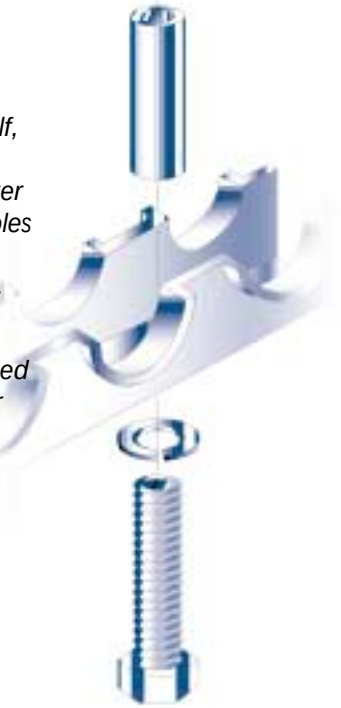

THREAD ADAPTER FOR DRILLED HOLE

1. *Using a scale, or the Clamping Unit itself, measure and mark location on mounting surface for each mounting hole of the lower Clamping Unit. Note that all mounting holes are spaced at even increments.*

2. *Drill appropriate size hole for particular MULTI-CLAMP series being installed.*

3. *Assemble required number of Stacking Nuts and Thread Adapters for each mounting hole.*

4. *Position lower Clamping Unit over drilled holes. Place threaded portion of assembled Thread Adapter-Stacking Nut through both lower clamping unit mounting hole and drilled hole.*

5. *Attach lockwasher and nut.*

Multi-Clamp®

Hydro-Craft® Junction Adapters— A Fitting Solution

The Hydro-Craft line of patented junction adapters are designed to eliminate traditional union problems. They are engineered to fit securely into the MULTI-CLAMP® and STRUT-ADAPTER® systems. Offered in a wide range of standard sizes in JIC, NPT, SAE, and O-Ring Face Seal style, they are manufactured of 12L14 Leadloy.

They are a critical element in both junction clamping systems, and are available in sizes as listed in the chart below. (See page 9 for dimensions).

JIC MALE 37° FLARE	FEMALE NPT	FEMALE SAE	O-RING FACE SEAL
1/4"	3/8"	3/4-16	3/8"
3/8"	3/4"	1-1/6-12	1/2"
1/2"	1-1/4"	1-5/8-12	5/8"
5/8"			3/4"
3/4"			1"
7/8"			1-1/4"
1"			1-1/2"

Call for information and quantity requirements on special junction adapters for Strut-Adapter and MULTI-CLAMP, such as inverted flare, Japanese and BSP sizes. Fittings are available in a wide range of materials also, including stainless steel and brass.

Multi-Clamp® Bulkhead Spacer

The MULTI-CLAMP® Bulkhead Spacer is designed to allow adapters for the 2" HC-16 Series MULTI-CLAMP to be applied to the 3" HC-32 Series MULTI-CLAMP. The Bulkhead is a rugged molded thermoplastic elastomer that can withstand the effects of most oils, chemicals, and cleaning compounds from -48°F to 275°F.

All of the HC-16 Series Junction Adapters can be used in the HC-32 Series MULTI-CLAMPS

The need for bulky and heavy adapters and bushing reducers is eliminated

The cost to apply the junction adapters is reduced to approximately 1/6 of the previous cost

Metal to metal contact is replaced by a cushion

How To Order

Specify the Bulkhead Spacer by part number HC-32-BS-16

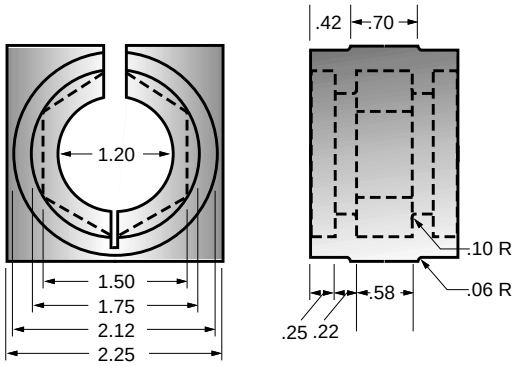

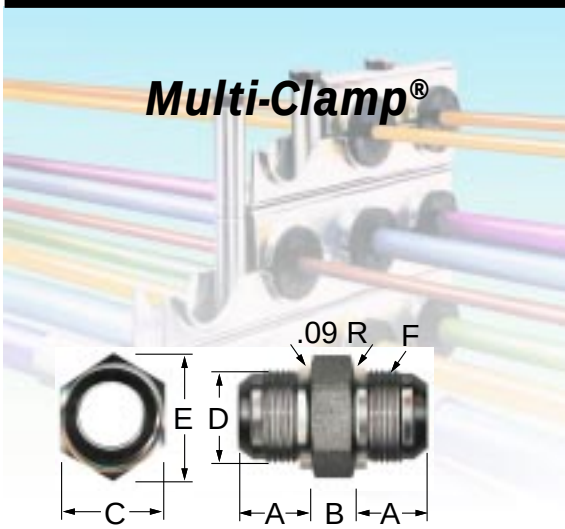

37° FLARE MALE JUNCTION ADAPTER

PART NO.	TUBE SIZE	A	B	C	D	E	F THREAD
SERIES 1-1/2"							
B-10-4	1/4	.76	.56	1	1-9/64	27/32	7/16-20
B-10-6	3/8	.76					9/16-18
B-10-8	1/2	.87					3/4-16
B-10-10	5/8	.96					7/8-14
SERIES 2"							
B-16-4	1/4	.76	.56	1-1/2	1-23/32	1-13/64	7/16-20
B-16-6	3/8	.76					9/16-18
B-16-8	1/2	.87					3/4-16
B-16-10	5/8	.96					7/8-14
B-16-12	3/4	1.07					1-1/6-12
B-16-14	7/8	1.10					1-3/16-12
B-16-16	1	1.10					1-5/16-12

FEMALE JUNCTION ADAPTER

PART NO.	A	B	C	D	E	F	G THREAD
BSAE-10-8	1	2-13/16	.843	.84	.28	.56	3/4-16 SAE
BSAE-16-12	1-1/2	3-1/8	1.20	.93	.34	.56	1-1/16-12 SAE
BSAE-32-20	2-1/4	2-5/8	2.12	.56	.25	.68	1-5/8-12 SAE

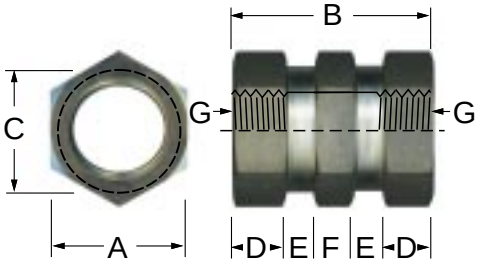

FEMALE JUNCTION ADAPTER-PIPE

PART NO.	A	B	C	D	E	F	G THREAD
BFM-10-6-P	1	2-13/16	.843	.84	.28	.56	3/8 N.P.T.
BFM-16-12-P	1-1/2	3-1/8	1.20	.93	.34	.56	3/4 N.P.T.
BFM-32-20-P	2-1/4	2-5/8	2.12	.56	.25	.68	1-1/4 N.P.T.

O-RING FACE SEAL MALE JUNCTION ADAPTER

PART NO.	TUBE SIZE	A	B	C	D	E	F	G	H THREAD
FB-10-6	3/8	1	1.98	.43	.28	.56	.26	.84	11/16-16
FB-10-8	1/2	1	2.12	.50	.28	.56	.38	.84	13/16-16
FB-10-10	5/8	1	2.32	.60	.28	.56	.48	.84	1-14
FB-16-6	3/8	1.5	1.98	.43	.34	.56	.26	1.20	11/16-16
FB-16-8	1/2	1.5	2.12	.50	.34	.56	.38	1.20	13/16-16
FB-16-10	5/8	1.5	2.32	.60	.34	.56	.48	1.20	1-14
FB-16-12	3/4	1.5	2.42	.65	.34	.56	.61	1.20	1-3/16-12
FB-16-16	1	1.5	2.48	.68	.34	.56	.81	1.20	1-7/16-12
FB-32-20	1-1/4	2.25	2.98	.68	.437	.75	1.02	2.12	1-11/16-12
FB-32-24	1-1/2	2.25	2.98	.68	.437	.75	1.26	2.12	2-12

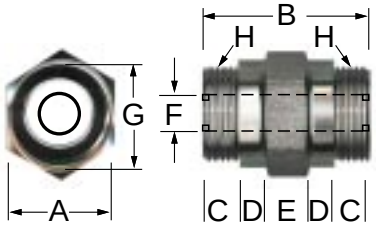

All dimensions are approximate in inches

Multi-Clamp®

How To Order

Choose the part number, select no symbol for plated steel, SS for stainless steel, or A for aluminum.

Clamps and bushings can be ordered separately.

Example: HC-16-3-4 - SS

This example would provide you with a 2" clamping unit, with 4 mounting holes, in stainless steel.

Clamps can be ordered in special sizes, please call.

CLAMPING UNIT

PART NO.	A	B No. of Holes	C	D	E	F	G	H	I	J	K	L
SERIES HC-10 1-1/2"												
HC-10-2	2-15/16	2	23/32	1-1/2	1-15/32	1-1/2	3/4	47/64	5/32	14 GA.	11/32	27/64
HC-10-3	4-13/32	3	23/32		1-15/32							
HC-10-4	5-15/16	4	23/32		1-15/32							
HC-10-5	7-9/64	5	19/32		1-11/32							
HC-10-6	8-15/16	6	23/32		1-15/32							
HC-10-7	10-3/16	7	19/32		1-11/32							
HC-10-32	48	32										
SERIES HC-16 2"												
HC-16-2	3-7/8	2	15/16	2	1-15/16	2	1	3/4	5/32	14 GA.	11/32	19/32
HC-16-3	5-41/64	3	27/32		1-27/32							
HC-16-4	7-57/64	4	15/16		1-15/16							
HC-16-5	9-43/64	5	27/32		1-27/32							
HC-16-6	11-43/64	6	13/16		1-13/16							
HC-16-7	13-5/8	7	13/16		1-13/16							
HC-16-24	48	24										
SERIES HC-32 3"												
HC-32-2	6-49/64	2	1-7/8	3	3-3/8	3	1-1/2	1	1/4	11 GA.	13/32	1-1/16
HC-32-3	8-45/64	3	1-13/32		2-63/64							
HC-32-4	11-45/64	4	1-13/32		2-51/64							
HC-32-5	14-45/64	5	1-13/32		2-55/64							
HC-32-6	17-45/64	6	1-13/32		2-55/64							
HC-32-16	48	16										

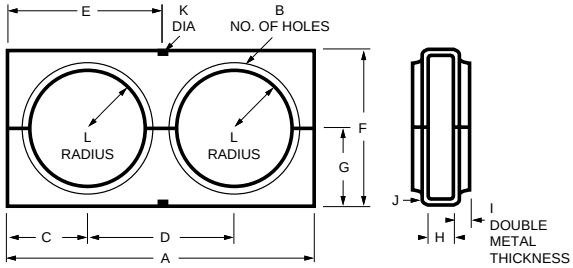

CLAMPING UNIT WITH OUTSIDE MOUNTING HOLES

PART NO.	A	B No. of Holes	C	D
SERIES HC-10 1-1/2"				
HC-10-1-2	2-3/16	1	11/32	1-1/2
HC-10-2-3	3-51/64	2	25/64	1-1/2
HC-10-3-4	5-19/64	3	25/64	1-1/2
HC-10-4-5	6-51/64	4	25/64	1-1/2
HC-10-5--6	8-19/64	5	25/64	1-1/2
SERIES HC-16 2"				
HC-16-1-2	2-21/32	1	21/64	2
HC-16-2-3	4-49/64	2	25/64	2
HC-16-3-4	6-51/64	3	25/64	2
HC-16-4-5	8-51/64	4	25/64	2
SERIES HC-32 3"				
HC-32-1-2	4	1	1/2	3
HC-32-2-3	6-55/64	2	27/64	3
HC-32-3-4	9-55/64	3	27/64	3
HC-32-4-5	12-55/64	4	27/64	3

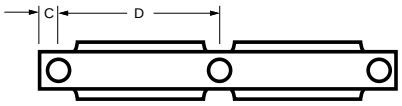

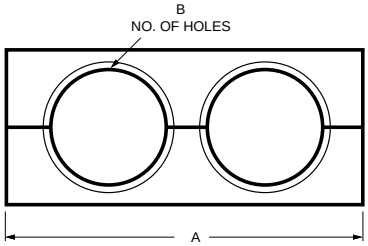

hydro-craft

Multi-Clamp®

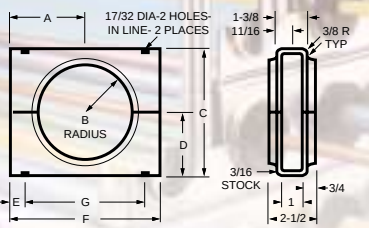

SINGLE CLAMPING UNIT WITH OUTSIDE MOUNTING HOLES

PART NO.	A	B	C	D	E	F	G
SERIES HC-46							
HC-46-1	3	1-3/4	5	2-1/2	1/2	6	5
SERIES HC-72							
HC-72-1	3-3/4	2-1/2	6-1/2	3-1/4	1/2	7-1/2	6-1/2
SERIES HC-96							
HC-96-1	5-1/2	3-3/4	9-3/16	4-9/16	3/4	11	9-1/2

DOUBLE CLAMPING UNIT

PART NO.	A	B	C	D	E	F	G	H	I
SERIES HC-46									
HC-46-2	3	5	1-3/4	1-3/4	5	11	10	2-1/2	5
SERIES HC-72									
HC-72-2	3-3/4	6-1/2	2-1/2	2-1/2	6-1/2	14	13	3-1/4	6-1/2

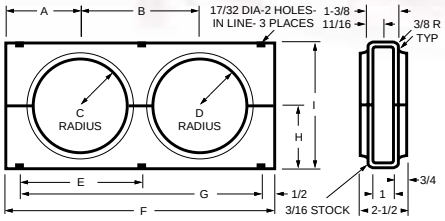

SPLIT BUSHING FOR TUBE AND PIPE APPLICATIONS

PART NO.	TUBE SIZE	A INCHES	A-1 (mm)	B DIA.	C LENGTH
SERIES HC-10 1-1/2"					
G-10-3	3/16	.172	4.4	7/8	1-5/16
G-10-4	1/4	.234	5.9		
G-10-5	5/16	.297	7.5		
G-10-6	3/8	.359	9.1		
G-10-8	1/2	.484	12.3		
G-10-10	5/8	.609	15.5		
G-10-12	3/4	.734	18.6		
SERIES HC-16 2"					
G-16-4	1/4	.234	5.9	1-1/4	1-5/16
G-16-5	5/16	.297	7.5		
G-16-6	3/8	.359	9.1		
G-16-8	1/2	.484	12.3		
G-16-10	5/8	.609	15.5		
G-16-12	3/4	.734	18.6		
G-16-14	7/8	.859	21.8		
G-16-16	1	.984	25.0		
	PIPE SIZE				
G-16-4-P	1/4	.516	13.1	1-1/4	1-5/16
G-16-6-P	3/8	.656	16.7		
G-16-8-P	1/2	.813	20.7		
G-16-12-P	3/4	1.031	26.2		
SERIES HC-32 3"					
G-32-4	1/4	.234	5.9	2-3/16	1-3/4
G-32-6	3/8	.359	9.1		
G-32-8	1/2	.484	12.3		
G-32-10	5/8	.609	15.5		
G-32-12	3/4	.734	18.6		
G-32-14	7/8	.859	21.8		
G-32-16	1	.984	25.0		
G-32-20	1-1/4	1.234	31.3		
G-32-24	1-1/2	1.484	37.7		
G-32-28	1-3/4	1.734	44.0		
G-32-32	2	1.984	50.4		
	PIPE SIZE				
G-32-4-P	1/4	.516	13.1	2-3/16	1-3/4
G-32-6-P	3/8	.656	16.7		
G-32-8-P	1/2	.813	20.7		
G-32-12-P	3/4	1.031	26.2		
G-32-16-P	1	1.297	32.9		
G-32-20-P	1-1/4	1.641	41.7		
G-32-24-P	1-1/2	1.875	47.6		

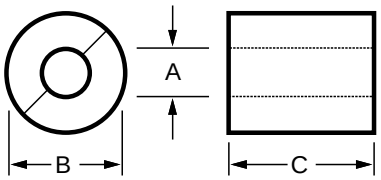

How To Order *Select by part number. Call for pricing and quantity requirements.*

All dimensions are approximate in inches

Multi-Clamp®

For HOSE applications

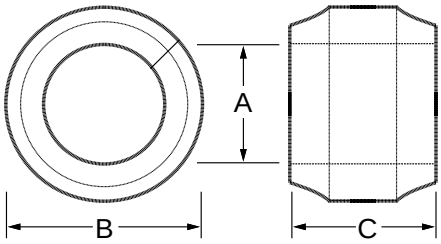

SPLIT BUSHING FOR HOSE APPLICATIONS

PART NO.	A INCHES	A-1 (mm)	B	C
SERIES HC-10 1-1/2"				
SG-10-6	.359	9.1	1	1-5/16
SG-10-4-P	.516	13.1		
SG-10-9	.562	14.3		
SG-10-11	.656	16.7		
SG-10-12	.734	18.6		
SERIES HC-16 2"				
SG-16-4	.234	5.9	1-1/2	1-5/16
SG-16-6	.359	9.1		
SG-16-7	.400	10.2		
SG-16-8	.484	12.3		
SG-16-4-P	.516	13.1		
SG-16-9	.562	14.3		
SG-16-10	.609	15.5		
SG-16-6-P	.656	16.7		
SG-16-12	.734	18.6		
SG-16-8-P	.813	20.7		
SG-16-14	.859	21.8		
SG-16-15	.922	23.4		
SG-16-16	.984	25.0		
SG-16-12-P	1.031	26.2		
SERIES HC-32 3"				
G-32-17	1.125	28.6	2-23/64	1-3/4
G-32-19	1.200	30.5		
G-32-23	1.406	35.7		
G-32-25	1.453	36.9		
G-32-26	1.560	39.6		
G-32-27	1.703	43.3		
G-32-29	1.750	44.5		
G-32-31	1.906	48.4		
SERIES HC-46 5"				
G-46-25	1.453	36.9	3-7/8	2-53/64
G-46-27	1.703	43.3		
G-46-31	1.785	45.3		
G-46-32	2.00	50.8		
G-46-33	2.040	51.8		
G-46-34	2.169	55.1		
G-46-40	2.500	63.5		
G-46-43	2.688	68.3		
G-46-39	2.825	71.8		

For TUBE or PIPE applications

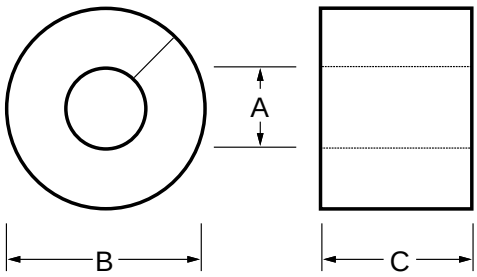

SPLIT BUSHING FOR PIPE APPLICATIONS

PART NO.	PIPE SIZE	A INCHES	A-1 (mm)	B	C
SERIES HC-46					
G-46-16-P	1	1.297	32.9	3-55/64	2-3/4
G-46-20-P	1-1/4	1.644	41.8		
G-46-24-P	1-1/2	1.884	47.9		
G-46-32-P	2	2.359	59.9		
G-46-40-P	2-1/2	2.859	72.6		
SERIES HC-72					
G-72-32-P	2	2.359	59.9	5-5/16	2-3/4
G-72-40-P	2-1/2	2.859	72.6		
G-72-48-P	3	3.484	88.5		
G-72-56-P	3-1/2	3.984	101.2		
G-72-64-P	4	4.484	113.9		
SERIES HC-96					
G-96-80-P	5	5.547	140.9	7-7/8	2-3/4
G-96-96-P	6	6.609	167.9		

hydro-craft

Multi-Clamp®

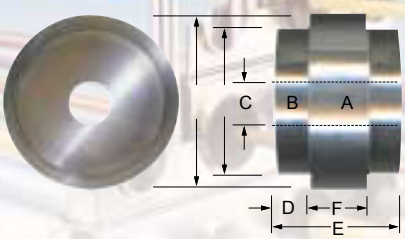

MOUNTING ADAPTER (for pillar or spar mounting)

MULTI-CLAMP SERIES	PART NO.	A DIA.	B DIA.	C DIA.	D	E	F (±.003)
HC-10-1-1/2"	B-10-MO	1	.8390 MAX .8350 MIN	11/32	9/32	1-1/16	.510
HC-16-2"	B-16-MO	1-3/8	1.193 MAX 1.187 MIN	11/32	9/32	1-1/16	.510
HC-32-3"	B-32-MO	2-1/4	2.128 MAX 2.122 MIN	13/32	27/64	1-9/16	.687

SOCKET-HEAD STACKING NUT (one required for each mounting hole)*

MULTI-CLAMP SERIES	PART NO.	A	B DIA.	C THREAD	D CHAMFER	E	F
HC-10	N-10	1.335	1/2	5/16-18	1/32x45 °	5/16	7/32
HC-16	N-16	1.800	1/2	5/16-18	1/32x45 °	5/16	7/32
HC-32	N-32	2.780	11/16	3/8-16	1/16x30 °	3/8	9/32
HC-46	N-46	4.500	1	1/2-13	1/16x30 °	1/2	
HC-72	N-72	6.00	1	1/2-13	1/16x30 °	1/2	
HC-96	N-96	8.750	1	1/2-13	1/16x30 °	1/2	

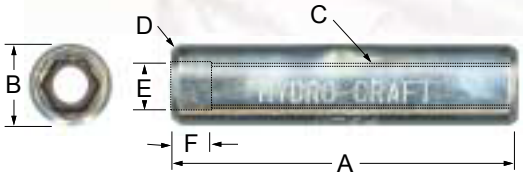

THREAD ADAPTER (for installing or stacking)*

MULTI-CLAMP SERIES	PART NO.	A	B	C	D THREAD
HC-10 & HC-16	T-10	.62	.62	1.38	5/16-18
HC-32	T-32	.88	.88	2	3/8-16
HC-46,72 & 96	T-72	.50	.62	1.50	1/2-13

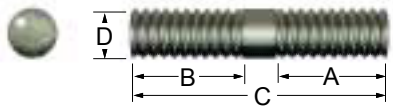

SELF-TAPPING ADAPTER (for drilled hole mounting)

MULTI-CLAMP SERIES	PART NO.	A THREAD	B	C	D	E	F
HC-10 & HC-16	ST-10	5/16-18	3/4	5/8	1/2	.577	1.50

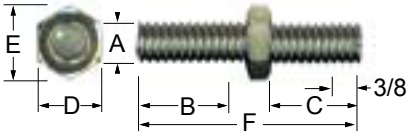

WELD ADAPTER (for weld mounting)

MULTI-CLAMP SERIES	PART NO.	A	B	C THREAD	D
HC-10 & HC-16	W-10 W-16	.44	.75	5/16-18	1
HC-32	W-32	.47	1	3/8-16	1.25
HC-46,72 & 96	W-72	.53	1.5	1/2-13	1.375

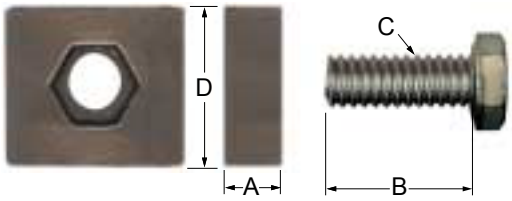

REDUCER ADAPTER (for stacking HC-10 on HC-32 series clamp)

MULTI-CLAMP SERIES	PART NO.	A THREAD	B THREAD	C	D	E	F	G
HC-32	R-32	5/16-18	3/8-16	.75	1	.50	.575	2.25

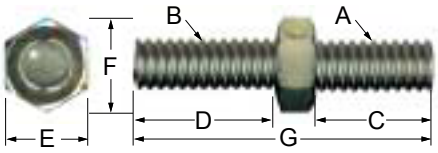

STANDARD PARTS*

PART NO.	MULTI-CLAMP SERIES	A THREAD	B	C	D	E
HB-10	HC-10 & HC-16	5/16-18	7/32	1/2	0.577	3/4
HN-10		5/16-18	17/64	1/2	0.577	
HB-32	HC-32	3/8-16	1/4	9/16	0.650	1
HN-32		3/8-16	21/64	9/16	0.650	
HB-72	HC-46, 72 & 96	1/2-13				1-1/2
HN-72		1/2-13				
LOCKWASHER		A				
HW-10	HC-10 & HC-16	5/16				
HW-32	HC-32	3/8				
HW-72	HC-46, 72 & 96	1/2				

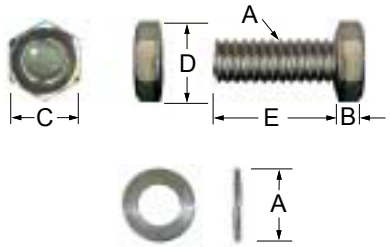

How To Order

Select by part number. *Add SS to end of part number for stainless steel

Hydro-Strut® Clamping System

Reduces line noise by as much as 80%

Available in wide range of line sizes from 1/4" to 2"

Easy installation through channel mounting

High-quality materials of construction

The Hydro-Strut Clamping System is the most effective clamp available - greatly reducing noise due to line shock and vibration!

The Hydro-Strut clamping system is designed for hydraulic, pneumatic, electrical, and fuel line applications, where it retains, guides, protects, and spaces line runs uniformly. This design can easily maintain equal centers, even when the line size varies. Lines are rigid, have a neat appearance, and install easily through channel mounting.

Independent testing shows the Hydro-Strut clamping system, using Styrene Butadiene Rubber (SBR) bushings, to be 80 percent more efficient at reducing noise than conventional cushion clamping systems. The SBR bushing, which provides the cushion for the reduced line noise, is compression molded, and selected for its excellent compatibility with industrial solvents, fuels, and hydraulic fluids. The clamp is available in either stainless or plated steel.

Available standard sizes for tube, hose and pipe range from 1/4-inch through 2-inch. Special sizes are available, please contact the factory for more information.

How To Order

Simply choose the clamp size, select no symbol for steel or SS for stainless steel, and the appropriate bushing size. Clamps and bushings are ordered separately.

Example: *Clamp* ***HCS-32-M - SS*** *and Bushing* ***RSG-32-10***

This example would provide you with our larger, stainless steel clamp, and a bushing for 5/8" tube.

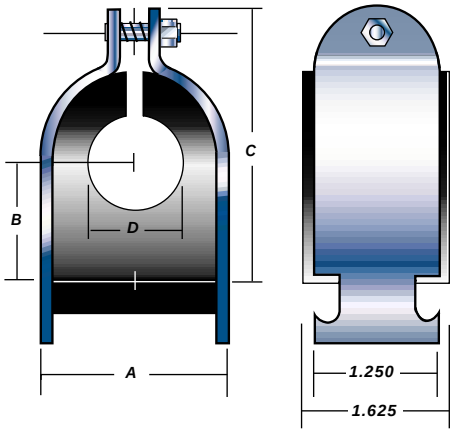

CLAMP NO.	A	B	C
HCS-16-M	1.95	1.20	2.80

BUSHING No.	TUBE SIZE	D INCHES	D-1 (mm)
RSG-16-4	1/4	.234	5.9
RSG-16-6	3/8	.359	9.1
RSG-16-8	1/2	.484	12.3
RSG-16-10	5/8	.609	15.5
RSG-16-12	3/4	.734	18.6
RSG-16-14	7/8	.859	21.8
RSG-16-16	1	.984	25.0
RSG-16-20	1-1/4	1.234	31.3
	Pipe Size		
RSG-16-4P	1/4	.516	13.1
RSG-16-6P	3/8	.656	16.7
RSG-16-8P	1/2	.813	20.7
RSG-16-12P	3/4	1.031	26.2
RSG-16-16P	1	1.297	32.9

CLAMP NO.	A	B	C
HCS-32-M	2.95	1.70	3.77

BUSHING No.	TUBE SIZE	D INCHES	D-1 (mm)
RSG-32-6	3/8	.359	9.1
RSG-32-8	1/2	.484	12.3
RSG-32-10	5/8	.609	15.5
RSG-32-12	3/4	.734	18.6
RSG-32-14	7/8	.859	21.8
RSG-32-16	1	.984	25.0
RSG-32-20	1-1/4	1.234	31.3
RSG-32-24	1-1/2	1.484	37.7
RSG-32-32	2	1.984	50.4
	Pipe Size		
RSG-32-4P	1/4	.516	13.1
RSG-32-6P	3/8	656	16.7
RSG-32-8P	1/2	.813	20.7
RSG-32-12P	3/4	1.031	26.2
RSG-32-16P	1	1.297	32.9
RSG-32-20P	1-1/4	1.640	41.7
RSG-32-24P	1-1/2	1.870	47.5
RSG-32-32P	2	2.350	59.7

A Critical Junction . . .
. . . in any hydraulic system is the connection point between tube and hose, hose and pipe, etc. Improperly secured, they will coldwork, loosen, and LEAK. The MULTI-CLAMP® SYSTEM'S exclusive ability to clamp the line AT THE FITTING is widely used and approved in thousands of plants worldwide. Now, this exclusive advantage is available with Strut-Adapter. The specially designed bushing (shown below), securely accommodates the following Hydro-Craft junction adapters: (see page 9 for dimensions)

- FEMALE S.A.E. straight thread size: 3/4"-16.
- FEMALE NPT pipe thread size: 3/8".
- MALE 37 ° Flared Junction Adapters: 1/4", 3/8", 1/2", 5/8".
- MALE O-RING FACE SEAL, Tube Junction Adapters: 3/8", 1/2", 5/8", 3/4".

Clamp available in plated steel and stainless steel.

Strut-Adapter®

Insta[illegible] a snap - [illegible]mp, fitting, and cushion a[illegible]ll packaged together [illegible]early labeled

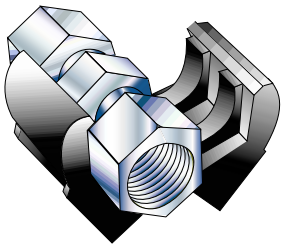

How To Order

Select by part number.

Example: WS-BFM-10-6P

This example would provide you with our female NPT j[illegible]on adapter with a 3/8" fitting size. Add SS to end of part num[illegible]r stainless steel clamp.

FITTING SIZE	PART NO.	A	B	C
FEMALE NPT JUNCTION ADAPTERS, HC-1[illegible]HC-16 SE[illegible]				
3/8" FEMALE NPT	WS-BFM[illegible]6P	[illegible]	2.07	2.60
FEMALE SAE JUNCTION ADAPT[illegible]C-10[illegible]16 SERIE[illegible]				
3/4"-16 FEMALE SAE	[illegible]S-BSAE-10[illegible]	3/4	2.07	2.60
MALE 37 ° FLARED JUNCTI[illegible]DAPTERS, HC-10 SERIES				
1/4" MALE 37 ° FLARE	[illegible]S-B-10-4	1/4	2.07	2.60
3/8" MALE 37 ° [illegible]E	[illegible]	3/8	2.07	2.60
1/2" MALE 37 [illegible]ARE	[illegible]	1/2	2.07	2.60
5/8" MALE 37 [illegible]LARE	WS-B-10-10	5/8	2.07	2.60
MALE O[illegible]G FACE SEAL, TUB[illegible]NCTION ADAPTERS, HC-10 SERIES				
3/8" M[illegible]	[illegible]S-FB-10-6	3/8	2.07	2.60
1/2" MALE	WS-FB-10-8	1/2	2.07	2.60
[illegible]ALE	WS-FB-10-10	5/8	2.07	2.60
[illegible]	WS-FB-10-12	3/4	2.07	2.60

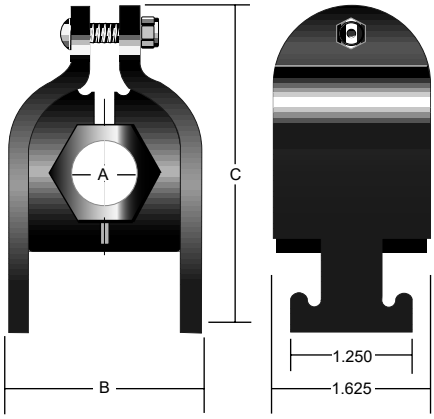

All dimensions are approximate in inches

DISCONTINUED

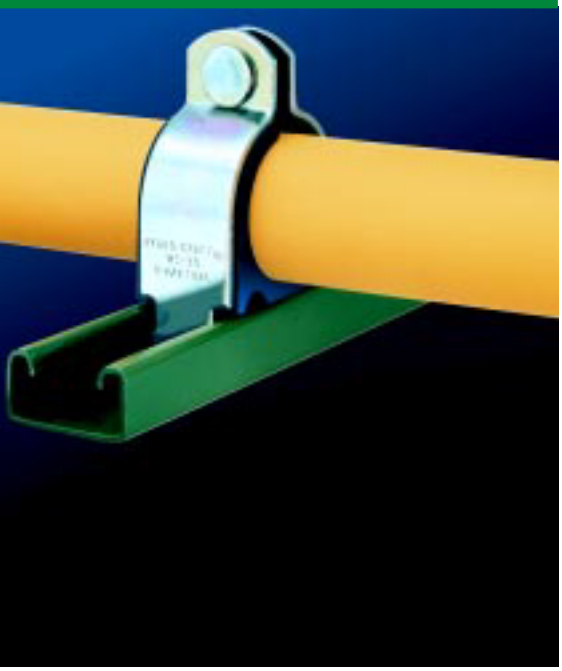

The WALKER-STRUT® CLAMPING SYSTEM is ideal for line runs through 6" where space is at a premium, or where severe shock and vibration is not present. Used now for several years in the fluid power industry, it has been proven time and again as the most sensible, most economical, most trouble-free rail-mounted clamp available. The Walker-Strut is also widely used in the refrigeration and mobile industries.

The WALKER-STRUT Clamp
Clamps are available in plated steel and stainless steel.

The Bushing
Manufactured from a thermoplastic elastomer, it's built tough to withstand the effects of most oils, chemicals and industrial cleaning compounds, in temperatures from – 20 °F to 275 °F.

Installation
One man, one tool time savings. Retrofits can be added without disassembling your present system.

Despite its exclusive benefits, the Walker-Strut System from Hydro-Craft is priced competitively. Installation is a snap: simply mount the base channel, position the clamp, and tighten!

WALKER-STRUT assemblies are available 5 sets per bag. Larger quantities can be shipped in bulk.

Walker-Strut®

The Channel Mounted Clamp from Hydro-Craft®
Reduces:

- VIBRATION
- SHOCK
- SURGE
- EXPANSION AND CONTRACTION

Hydro-Craft® WALKER-STRUT® Channel

Channel is used to mount Strut-Adapter, Hydro-Strut, Silent-Strut, and Walker-Strut Clamps. Steel Single-Anchor Channel, 14 ga. x 13/16 x 1-5/8" with green baked-on finish. Also available in 304 stainless steel.

Available in precut lengths: 5' and 10'.

PLEASE NOTE: Long channel shipped with a combined length and girth of 120" or more must ship by common carrier. Cut-to-size orders may therefore cost less due to shipping via U.P.S.

How To Order

Simply choose the clamp size, select no symbol for plated steel or SS for stainless steel, and the appropriate bushing size.

Example: WS-06-P - SS

This example would provide you with a stainless steel clamp, and a cushion for a 3/8" pipe.

CLAMP NO.	TUBE SIZE COPPER & STEEL TUBING	TUBE SIZE COPPER WATER PIPE(NOM)	A INCHES	A-1 (mm)	B	C	D
WS-04	1/4		.25	6.4	.62	.27	1.11
WS-06	3/8	1/4	.37	9.4	.82	.33	1.24
WS-08	1/2	3/8	.50	12.7	.94	.40	1.36
WS-10	5/8	1/2	.62	15.8	1.06	.46	1.50
WS-12	3/4	5/8	.75	19.1	1.20	.52	1.78
WS-14	7/8	3/4	.87	22.1	1.31	.58	1.91
WS-16	1		1	25.4	1.44	.65	2.03
WS-18	1-1/8	1	1.12	28.5	1.57	.70	2.16
WS-20	1-1/4		1.25	31.8	1.70	.77	2.30
WS-22	1-3/8	1-1/4	1.37	34.8	1.82	.83	2.75
WS-24	1-1/2		1.50	38.1	1.95	.90	2.75
WS-26	1-5/8	1-1/2	1.62	41.2	2.07	.96	3.03
WS-28	1-3/4		1.75	44.5	2.20	1.02	3.03
WS-30	1-7/8		1.87	47.5	2.32	1.09	3.28
WS-32	2		2	50.8	2.45	1.15	3.28
WS-34	2-1/8		2.12	53.9	2.57	1.27	3.53
WS-36	2-1/4		2.25	57.2	2.69	1.34	3.65
WS-38	2-3/8		2.37	60.2	2.82	1.41	3.78
WS-40	2-1/2		2.50	63.5	2.94	1.46	4.03
WS-42	2-5/8		2.62	66.6	3.07	1.53	4.03
WS-46	2-7/8		2.87	72.9	3.32	1.66	4.27
WS-48	3		3	76.2	3.44	1.72	4.52
WS-50	3-1/8		3.12	79.3	3.57	1.78	4.52
WS-56	3-1/2		3.50	88.9	3.95	1.97	4.91
WS-58	3-5/8		3.82	97.0	4.20	2.03	5.03
WS-64	4		4	101.6	4.45	2.28	5.53
WS-66	4-1/8		4.12	104.7	4.57	2.34	5.66
WS-72	4-1/2		4.50	114.3	4.95	2.53	6.03

WS-04 through WS-58 packed 5 units per bag. WS-64 through WS-72 packed 1 per bag.

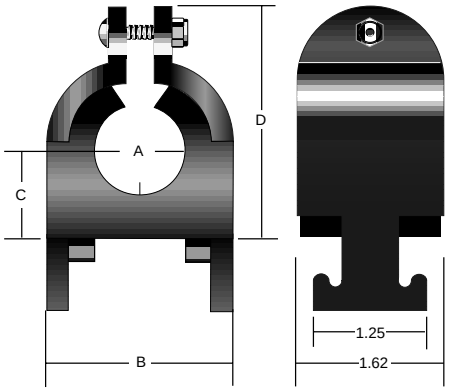

CLAMP NO.	PIPE SIZE	A INCHES	A-1 (mm)	B	C	D
WS-04P	1/4	.54	13.7	.98	.43	1.41
WS-06P	3/8	.67	17.0	1.13	.49	1.59
WS-08P	1/2	.84	21.3	1.29	.58	1.91
WS-12P	3/4	1.05	26.7	1.50	.70	2.16
WS-16P	1	1.31	33.3	1.76	.81	2.75
WS-20P	1-1/4	1.66	42.2	2.17	.99	3.03
WS-24P	1-1/2	1.90	48.3	2.35	1.09	3.28
WS-32P	2	2.37	60.2	2.82	1.41	3.78
WS-40P	2-1/2	2.87	72.9	3.32	1.66	4.27
WS-48P	3	3.50	88.9	3.95	1.97	4.91
WS-56P	3-1/2	4	101.6	4.45	2.28	5.53
WS-64P	4	4.50	114.3	4.95	2.53	6.03
WS-80P	5	5.58	141.7	6.01	3.06	7.03
WS-96P	6	6.62	168.2	7.07	3.59	8.03

Silent-Strut® Clamping System

EXCLUSIVE TO HYDRO-CRAFT

Easy channel mounting installation

Wide range of line sizes from 1/4" to 2"

High-quality materials of construction

Greatly reduces line noise

The Silent-Strut clamping system is excellent for use in refrigeration, HVAC and electrical applications, but is also effective on hydraulic, pneumatic and fuel line applications. In addition to its low cost, it offers excellent noise reduction due to the materials of construction and design of the channel mounting system. This channel mounting makes for a quick and easy installation. The superior design will maintain equal centers, even when the line size varies. Lines remain rigid and have a neat appearance.

The clamp is made from Zytel® (glass-filled nylon) that is very resistant to corrosion, and much lower in cost than stainless steel. Two clamp sizes are available. All the bushings are made from Styrene Butadiene Rubber (SBR). The bushing is secured in the clamp using stainless steel nuts and bolts. The SBR bushing is compression molded, selected for its compatibility with most oils, chemicals, and cleaning compounds, and provides the cushion for the noise reduction.

Available standard sizes for tube and pipe range from 1/4-inch through 2-inch. Please contact the factory for more information.

How To Order

Simply choose the clamp size and the appropriate bushing size. Clamps and bushings are ordered separately.

Example: *Clamp* ***HC-SS-16*** *and Bushing* ***G-16-10***

This example would provide you with our smaller Zytel® glass-filled nylon clamp and a bushing for 5/8" tube.

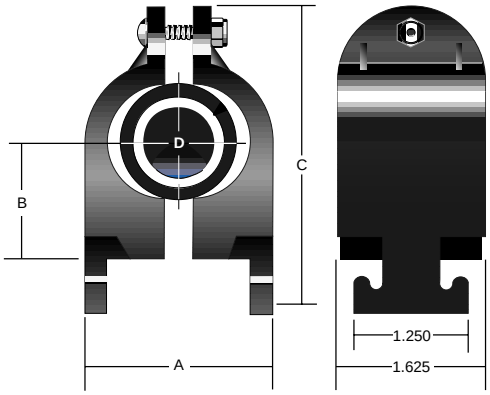

All dimensions are approximate in inches

CLAMP NO.	A	B	C
HC-SS-16	1.50	1.25	3 3/8

Bushing No.	TUBE SIZE	D INCHES	D-1 (mm)
G-16-4	1/4	.234	5.9
G-16-5	5/16	.297	7.5
G-16-6	3/8	.359	9.1
G-16-8	1/2	.484	12.3
G-16-10	5/8	.609	15.5
G-16-12	3/4	.734	18.6
G-16-14	7/8	.859	21.8
G-16-16	1	.984	25.0
	Pipe Size		
G-16-4-P	1/4	.516	13.1
G-16-6-P	3/8	.656	16.7
G-16-8-P	1/2	.813	20.7
G-16-12-P	3/4	1.031	26.2

CLAMP NO.	A	B	C
HC-SS-32	2.82	1.87	4 5/8

Bushing No,	TUBE SIZE	D INCHES	D-1 (mm)
G-32-4	1/4	.234	5.9
G-32-6	3/8	.359	9.1
G-32-8	1/2	.484	12.3
G-32-10	5/8	.609	15.5
G-32-12	3/4	.734	18.6
G-32-14	7/8	.859	21.8
G-32-16	1	.984	25.0
G-32-20	1-1/4	1.234	31.3
G-32-24	1-1/2	1.484	37.7
G-32-28	1-3/4	1.734	44.0
G-32-32	2	1.984	50.4
	Pipe Size		
G-32-4-P	1/4	.516	13.1
G-32-6-P	3/8	.656	16.7
G-32-8-P	1/2	.813	20.7
G-32-12-P	3/4	1.031	26.2
G-32-16-P	1	1.297	32.9
G-32-20-P	1-1/4	1.641	41.7
G-32-24-P	1-1/2	1.875	47.6

Tube (Inches) (OD)	Pipe (Inches) (Nominal Bore)	Metric (OD)
Standard Series		
1/4 to 3-1/2	1/8 to 2	6 to 102
Heavy Series		
1/4 to 8	1/8 to 8	6 to 324
Twin Series		
1/4 to 1-1/2	1/4 to 1-1/4	6 to 42

DIN Rails *- Order Separately*

28 x 14 x 2 Meters = ***D-RAIL-S***

40 x 22 x 2 Meters = ***D-RAIL-H***

How to Order

Build an ordering code as follows:

Example: ***A-H-P-24P-OC-HS-SS***

Hydro-Clamp = ***A***

Clamp Series

Heavy = ***H***
Standard = ***S***
Twin = ***T***
Standard with one mounting hole = ***O***

Insert Material

Polypropylene = ***P***
*Polyamide** = ***PM***
*Aluminum** = ***A***
None = ***X***

Size *(Specify size, then type)*

Tube = ***No Symbol***
Pipe = ***P***
Metric = ***M***

Mounting Hardware

Weld Plate = ***W***
DIN Rail Nut = ***R***
Top Cover Plate Only = ***OC***
Weld with Top Cover Plate = ***WC***
No Mounting Hardware = ***X***

Hardware Components *(Metric)*

Hex Bolt = ***H***
Hex Bolt with Spacers = ***HS***
Stacking Bolts = ***S***
Stacking Bolts with Lock Plate = ***SL***
Allen Bolts = ***A***
Locking Plate Only = ***L***
Spacer Only = ***SP***
No Hardware Components = ***X***

Stainless Steel Clamp

*Stainless Steel Clamp** = ***SS***
None = ***No Symbol***

**Special order*

DISCONTINUED!

Hydro-Clamp System

Routes Line Runs Simply and Inexpensively

- ***Easy to use, modular clamping system***
- ***Interchangeable with other major brands***
- ***Wide range of sizes, from 1/4" through 8"***
- ***Available in standard, heavy, and twin configurations, in polypropylene, aluminum*, and polyamide****
- ***Optional stainless steel clamp available***
- ***For use with tube, pipe, and metric sizes***
- ***Meets DIN SPEC 3015***
- ***DIN rails are available to complete your system***

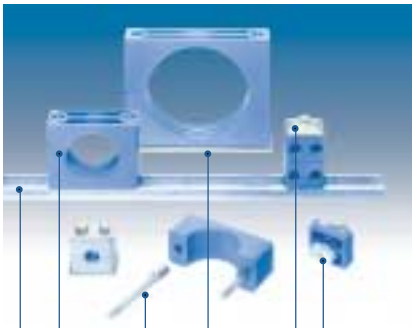

Econo-Isolator Clamping System

The Econo-Isolator clamping system offers a low-cost, high-quality solution for use in plumbing, mechanical, and HVAC/R applications.

Easy mounting using readily-available brackets

Made from high-quality Styrene Butadiene Rubber (SBR)

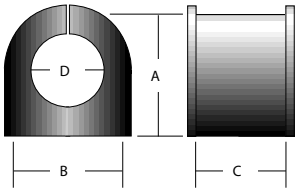

1-Hole Straps

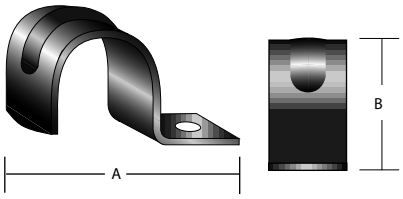

2-Hole Straps

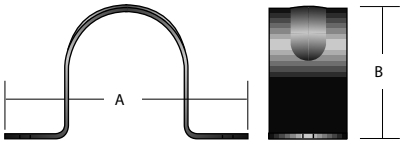

All dimensions are approximate in inches

Inexpensive Cushions To Fit Standard Pipe Straps

The Econo-Isolator not only meets the requirements for plumbing, mechanical, and HVAC/R applications, but performs well in hydraulic, pneumatic, fuel line, and electrical applications.

The Econo-Isolator, using standard pipe straps that are readily available, retains, guides, protects and spaces line runs uniformly. Lines are rigid, have a neat appearance, and install easily. The bushing is made from Styrene Butadiene Rubber. It is compression molded and selected for its excellent compatibility with industrial solvents, fuels, hydraulic fluids, other liquids and gases.

How To Order

Simply choose the bushing number and appropriate strap number that corresponds to the tube or pipe size you need. Bushings and pipe straps are ordered separately .

Example: Bushing EI-10-12 and Strap EIM-10

This would provide you with the bushing and strap to fit a 3/4" tube.

Bushing No.	Tube Size	A	B	C	D (Inches)	D-1 (mm)
EI-10-04	1/4	.870	.835	1.0	.235	5.9
EI-10-06	3/8				.360	9.1
EI-10-08	1/2				.485	12.3
EI-10-10	5/8				.610	15.5
EI-10-12	3/4				.735	19.6
	Pipe Size					
EI-10-04P	1/4				.525	13.3
EI-10-06P	3/8				.660	16.7
	Tube Size					
EI-16-14	7/8	1.30	1.24	1.0	.860	21.8
EI-16-16	1				.985	25.6
	Pipe Size					
EI-16-08P	1/2				.825	21.0
EI-16-12P	3/4				1.035	26.2
Bushing No.	**Tube Size**	**A**	**B**	**C**	**D (Inches)**	**D-1 (mm)**
EI-32-18	1-1/8	2.38	2.37	1.50	1.110	28.2
EI-32-20	1-1/4				1.235	31.3
EI-32-22	1-3/8				1.360	34.5
EI-32-24	1-1/2				1.485	37.7
EI-32-26	1-5/8				1.610	40.9
EI-32-28	1-3/4				1.735	44.0
EI-32-30	1-7/8				1.860	47.2
EI-32-32	2				1.985	50.4
EI-32-34	2-1/8				2.110	53.6
	Pipe Size					
EI-32-16P	1				1.300	33.0
EI-32-20P	1-1/4				1.645	41.8
EI-32-24P	1-1/2				1.885	47.8

1 Hole Strap No.	Size (Inches)	A	B
EIM-10-1	1/2"	1.85	0.9
EIM-16-1	1"	2.7	1.4
EIM-32-1	2"	4.7	2.325
2 Hole Strap No.	**Size (Inches)**	**A**	**B**
EIM-10	1/2"	2.438	0.81
EIM-16	1"	3.375	1.285
EIM-32	2"	5.25	2.325

* Add -SS to strap part numbers for stainless steel straps.

Front Cover

HYDRO-CRAFT

CATALOG 42

Line Clamping Systems

hydro-craft®

Inside Front Cover

Check Out Our Products & Accessories Catalog

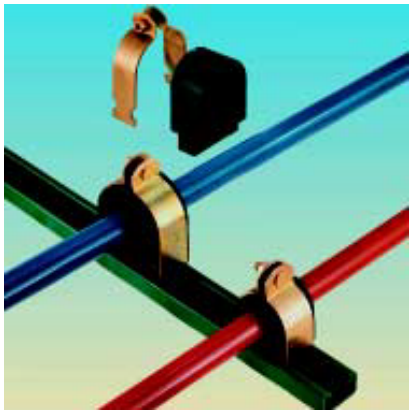

HYDRO-CRAFT INC.

Hydro-Craft was established in 1958 in a small shop in Detroit, Michigan as a manufacturer of quality hydraulic tanks. Over the years we have expanded our product line and our facilities. We currently have two state-of- the art plants located in Rochester Hills, Michigan and Henderson, Nevada. From these two points, we can ship our product conveniently to any location worldwide.

In addition to our line clamp systems, the Hydro-Craft product line includes stock and custom hydraulic reservoirs, filler breather caps, sight level gages, flange kits, shock mounts, pump/motor mounts, manifolds, and many more hydraulic accessories.

The dedication to providing our customers with quality parts and service has only grown stronger over the years. We thank you for your interest in our products.

410 E. Paradise Hills Drive,
Henderson, NV 89002
Tel (702) 566-3087
Fax (702) 566-9285

1821 Rochester Industrial Drive,
Rochester Hills, Michigan 48309
Tel (248) 652-8100
Fax (248) 652-0343

WWW: http://www.hydro-craft.com
E-mail: sales@hydro-craft.com

hydro-craft®