RV®

Precision Reduction Gear RV™

GEARHEADS

RS SERIES

Turntable Gearhead



Nabtesco®

Nabtesco®

moving it. stopping it.

Our innovative motion control technologies deliver safety, security and comfort in the transport and lifestyle fields.

Nabtesco Corporation was founded in 2003 through the merger of Nabco, Ltd. (est. 1925) and Teijin Seiki Co., Ltd. (est. 1944).
The move combined Nabco's proven fluid and pneumatic control technologies
with the cutting and assembly technologies developed by Teijin Seiki.
Since this time, we have been working to build on the technological and business foundation inherited from both companies,
with motion control technologies as our core.
This focus has enabled us to expand our operations into a wide range of new fields.

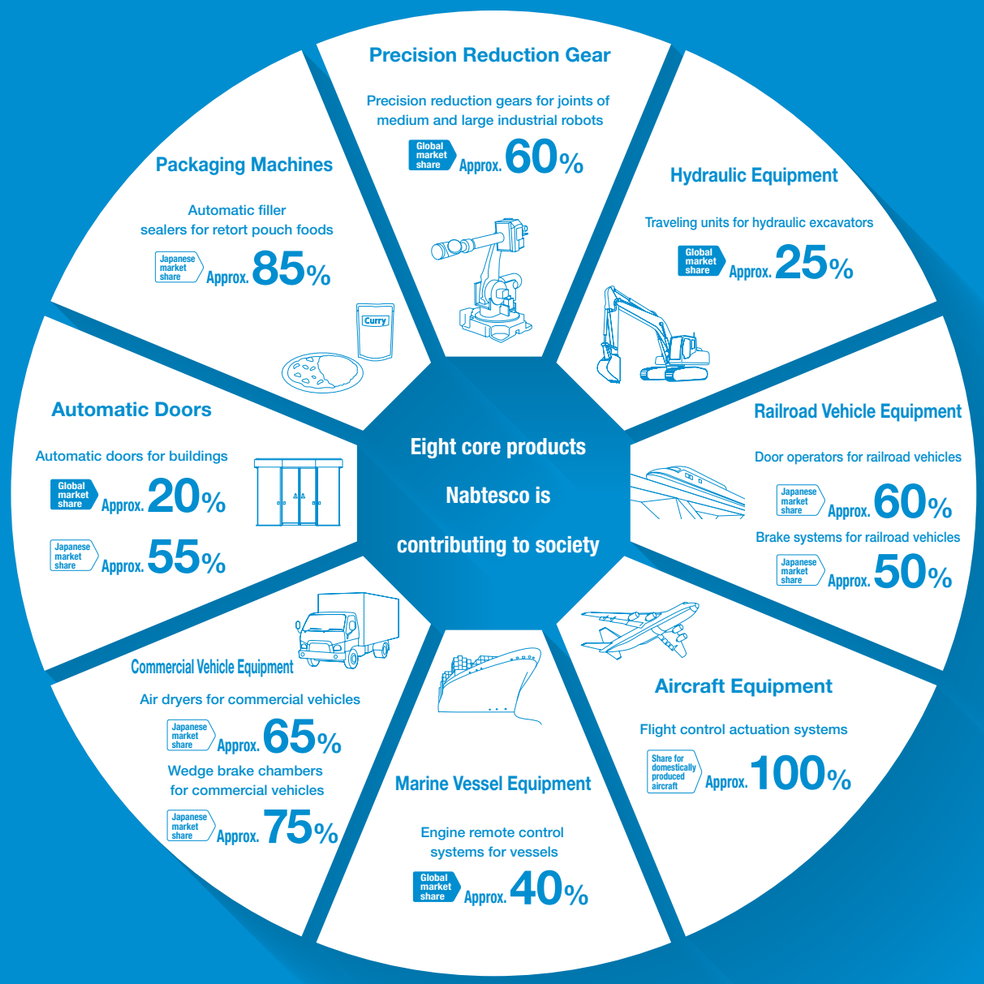

RV®

Supporting a Wide Range of Cutting-Edge Industries around the World

Precision Reduction Gear RV™

Nabtesco's Precision Reduction Gear RV™ is key components used in the joints of industrial robots, enabling precise movement while maintaining optimum power. Nabtesco has over 30 years of experience in this field and currently holds a major share of the global market. We are also actively working to expand applications for our gears into new fields, including machine tools as well as FPD and semiconductor production systems.



Precision Reduction Gear RV™

Structure and Features

Precision reduction gear RV™ is a reduction gear for precise motion control which uses a planocentric reduction gear mechanism.
This reduction gear design has advantages in rigidity and resistance against overload with a compact body due to a large number of simultaneously engaged gear teeth.
Furthermore, minimal backlash, rotational vibration and low inerita lead to rapid acceleration, smooth motion and accurate positioning.
We have a history of success in fields including industrial robots, machine tools, assembly equipment, conveyance equipment and more.

High accuracy Backlash (hysteresis loss) within 1 arc.min
High rigidity
High shock load resistance
High torque density High torque & Compact body
Wide range of reduction speed ratios
Minimal vibration

Watch video

How RV works?
Its structure and operating principle of Nabtesco's RV

2-Stage Reduction Structure

Speed reduction by 1st stage (spur gears) & 2nd stage (pin & gear)

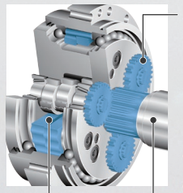

Speed ratio adjustable by changing 1st stage (spur) gear
- Wide range of speed ratios with the same outer diameter (low speed ratio – high speed ratio)

More compact machine
High speed ratio enables smaller servomotor

Input part (input gear) can be shortened.
- Inertia can make smaller.

Smaller motor selectable

Low speed rotation of the inner components (the RV gear)
- Minimal vibration

Enhanced machine accuracy
Reduced heat build-up

Pin & Gear Structure

Arrayed pins and RV gear, one tooth less than the pins, lead to reduction by mating.

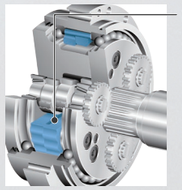

The large number of simultaneous engagement of pins & teeth of the RV gears
- High Precision (backlash and lost motion (≤ 1 arc. min.)
- High shock load resistance (withstands 5 x rated torque)

*Excluding some models

Enhanced machine accuracy
Enhanced machine durability

Rolling Contact Structure

2-stage reduction are all contacted with roller bearings except contact between pin halls in the case and the pins.

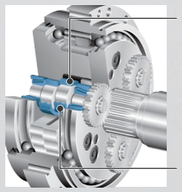

Low friction
- Excellent start efficiency
- Minimal backlash & lost motion

Energy saving (smaller servomotor)
Enhanced machine accuracy

Low wear
- Low material degradation

Easy maintenance (no backlash adjustment)

Integrated Outer Load Support Bearings Structure

Originally developed angular ball bearings

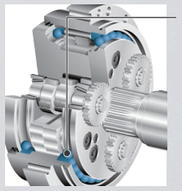

Support large capacity without additional support structures.

e.g. RS-900A
Allowable thrust load: 88,200N
Allowable moment: 44,100Nm

Reduced assembly man-hours

Two-sided Support Structure

Crankshafts supported by the shaft & the hold flange

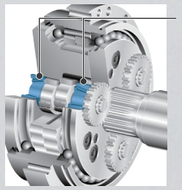

High resistance against force
- High torsional rigidity
- Minimal vibration
- High shock load resistance (withstands 5 x rated torque)

Enhanced machine accuracy
Enhanced machine durability

INDEX

What is the RS series ····· 5-6
Advantages of RS series ····· 7-10
Main RS series applications ····· 11
RS series model code ····· 12
Rating table ····· 13
Introducing Optional parts ····· 14
External dimensions, Reduction gear main unit ···· 15-22
External dimensions, Input spline ···· 23-25
External dimensions, Motor flange ···· 26-27

Technical Information

Considering the use of the RS series ···· 29
Glossary ····· 30

Product selection

Product selection flowchart ····· 31
Model code selection examples ···· 32-39
Allowable moment diagram ····· 40

Technical data

No-load running torque ····· 41
Calculation of tilt angle and torsion angle ···· 42

Design points

Remarks on designing ····· 43-44

Appendix

Inertia moment calculation formula ····· 45
Troubleshooting checksheet ····· 46
Introduction of Our Website ····· 47-48
Warranty ····· Back inside cover

RS Series Eliminates Turntable Problems!

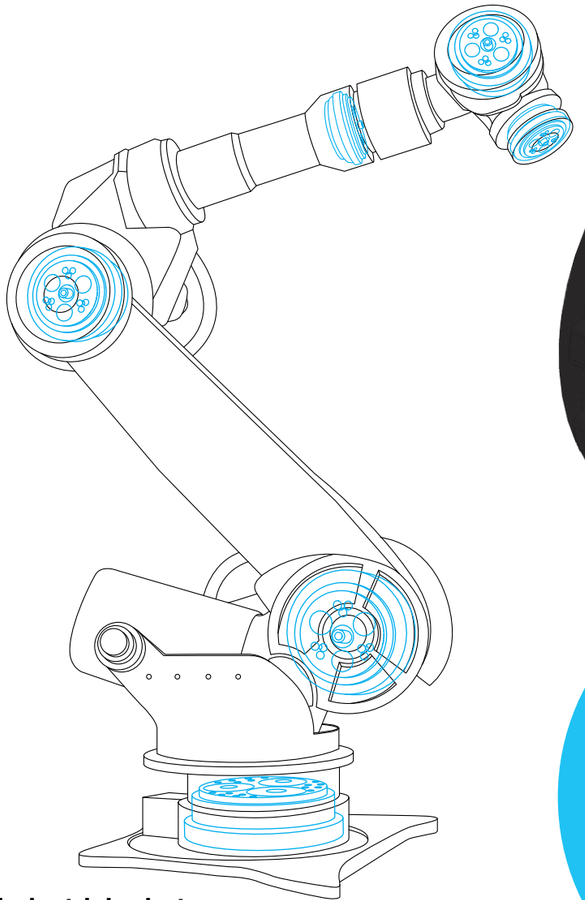

Industrial robot

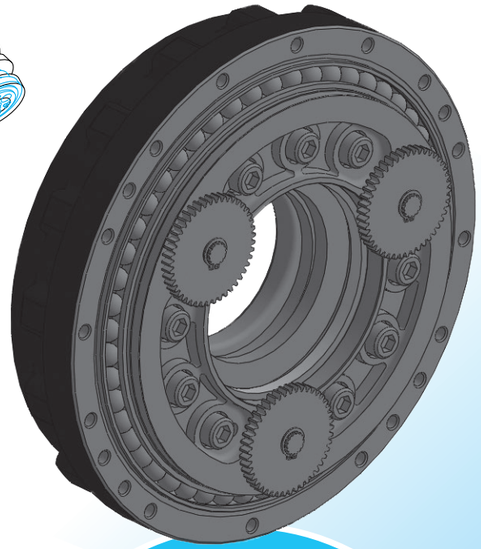

Precision Reduction Gear RV™

Precision Reduction Gear RV™ enables the precision movements of industrial robots and also ensures their strength. Precision Reduction Gear RV™ has been praised for being compact and lightweight while offering high precision and rigidity. Since its debut in 1985, Precision Reduction Gear RV™ has been selected for use by most major industrial robot manufacturers around the world.

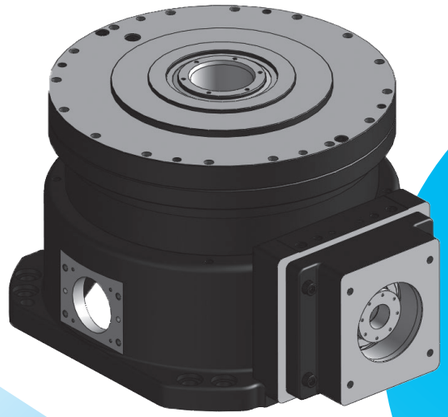

Precision Gearhead RS Series

The RS series continues the success of Nabtesco's world-leading Precision Reduction Gear RV™ series. These low profile gearheads are pre-lubricated with a sealed structure and are available in five types to suit different load capacities. Each type comes with dedicated fasteners that allow it to be mounted on all major motors for immediate use. As well as reducing the time needed for adjustment, the RS series significantly decreases both design and component requirements.

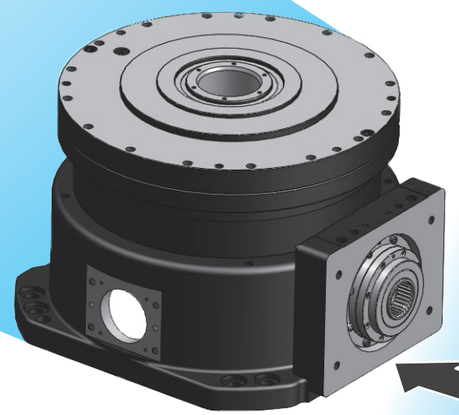

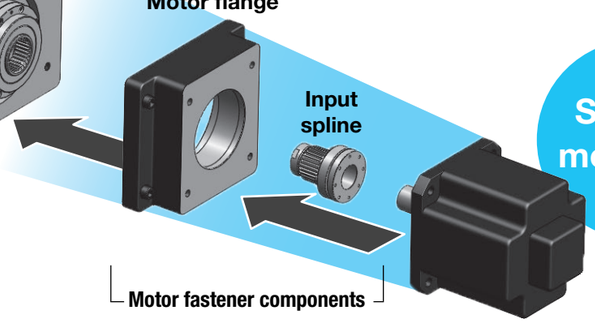

Simple mounting

More components increase assembly and adjustment times…

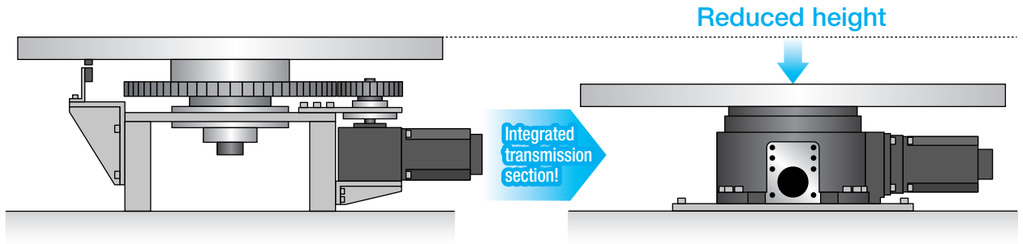

Want lower equipment even further…

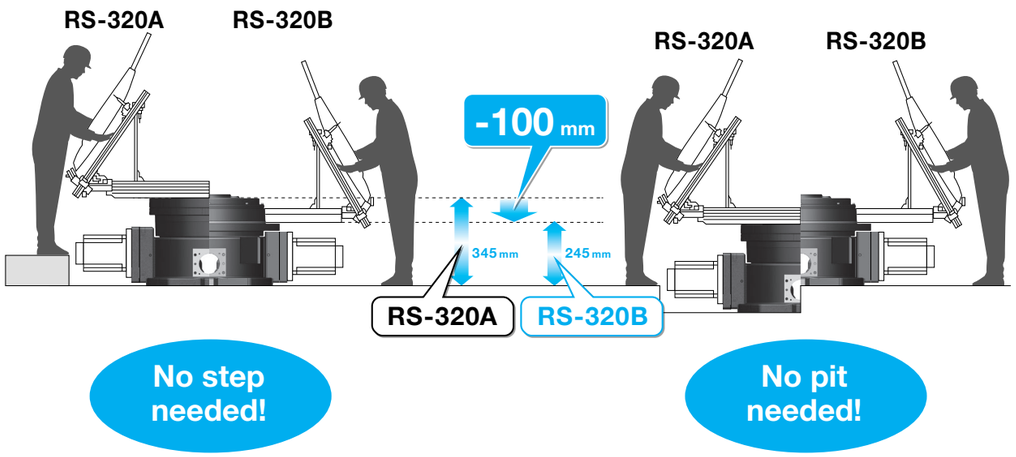

Individual features of RS series

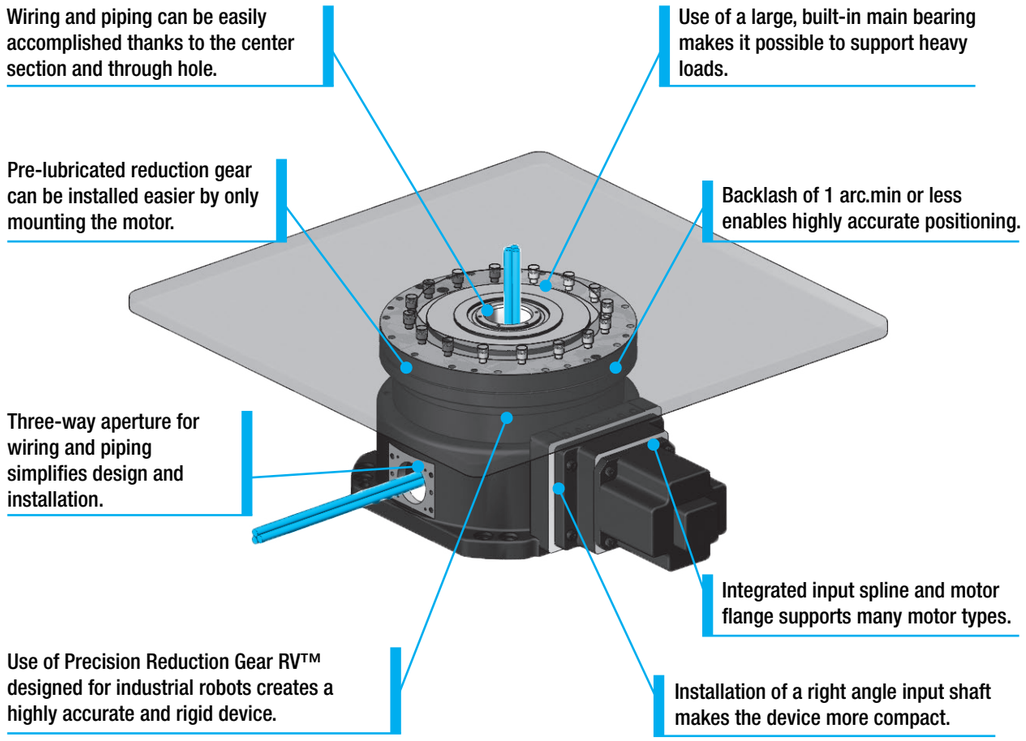

Structure and rotation directions

RS-50A/RS-50B

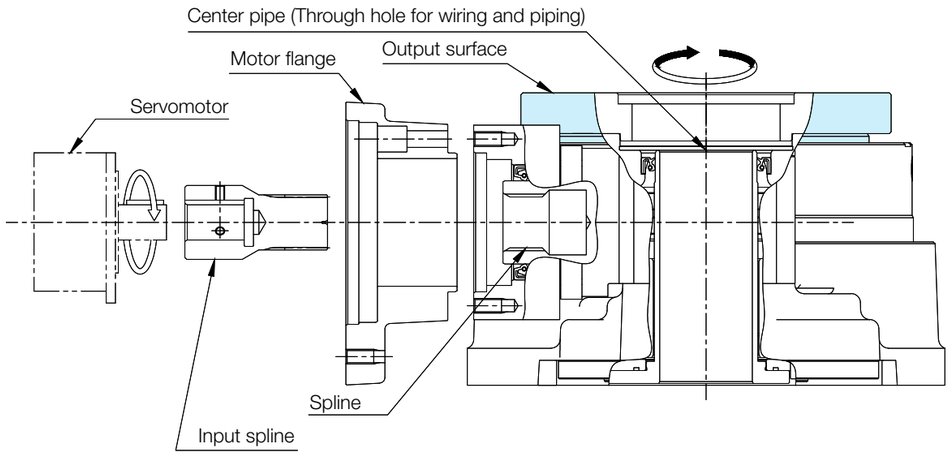

RS-260A/RS-260B

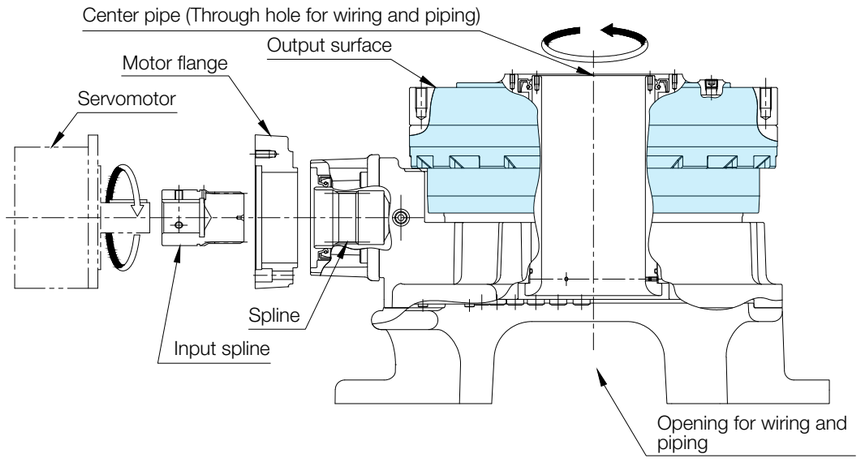

RS-320A/RS-320B/RS-400A

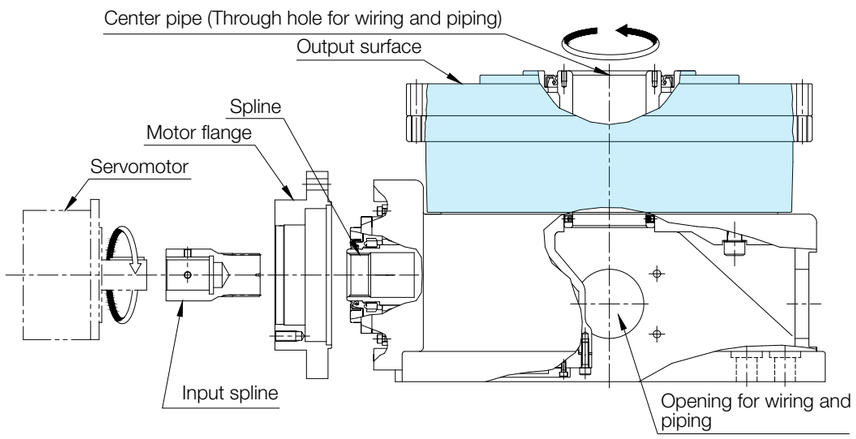

RS-900A

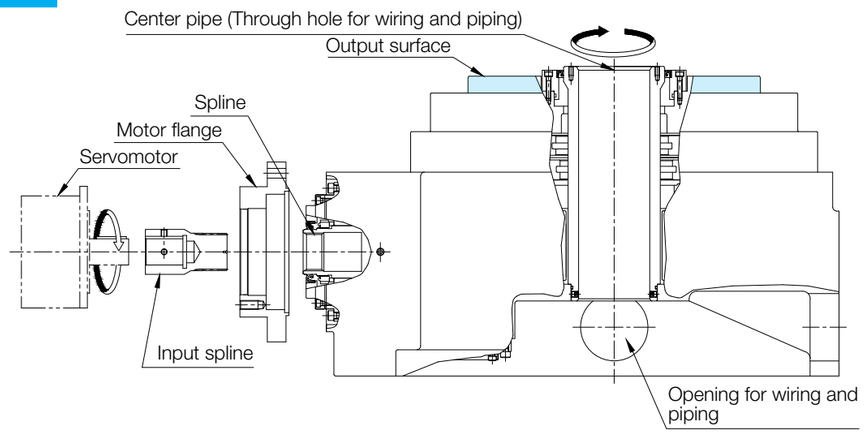

With the RS-260A/260B, RS-320A/320B/400A and RS-50A/50B, RS-900A, the rotation direction of the output shaft and servo motor differs.

Note: The areas indicate output rotation sections.

Welding turntables

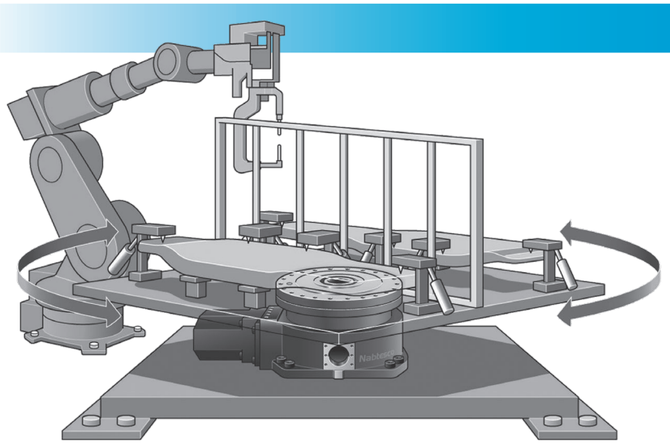

Index tables

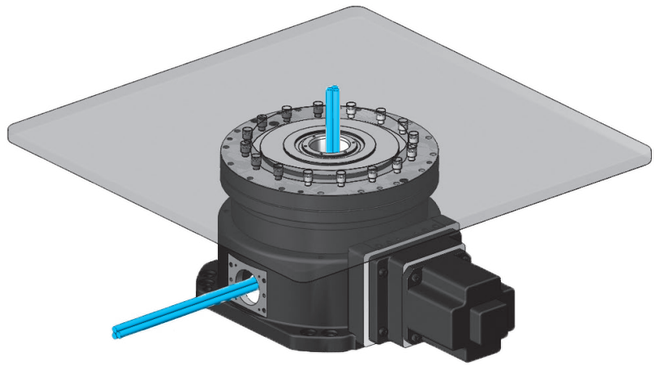

Positioners for heavy welding (rotary axis, tilting axis)

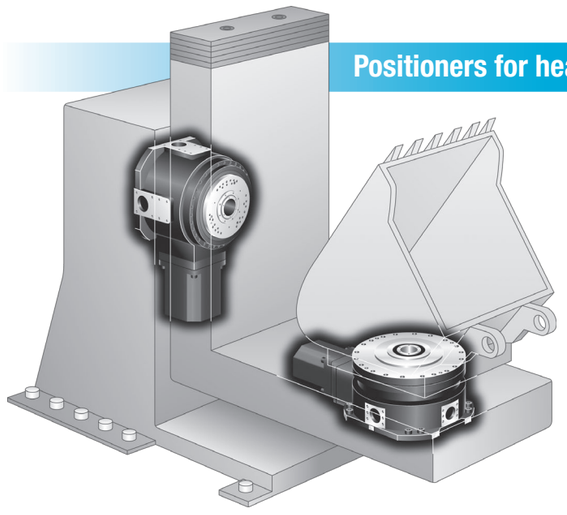

Product code

RS – 260 A – 120 – SXA – XB – LB

Model code	Frame number	Ratio code	Input spline code	Motor flange code	Lubricant code
RS	50A	65, 131, 164, 300	Standard component: 3 alphabetic characters. Third character may be numerical. (Code will differ depending on motor to be attached.) None: ZZZ	Standard component: 2-letter code (code will differ depending on motor to be attached) None: ZZ	SB , LB
	50B	65 , 131 , 164			SB , LB
	260A	120			LB
	260B	120			LB
	320A	170			LB, MW
	320B	170			LB, MW
	400A	170			LB
	900A	194 , 240			LB, MW

The lubricant code varies with the frame number. For the lubricants, refer to page 44.

How to select model code

Model Code	LL Input Spline Insertion Amount (mm)
RS-50A	40
RS-50B	
RS-260A	57
RS-260B	
RS-320A	20.5
RS-320B	
RS-400A	
RS-900A	20.5

- Check the thickness of the motor flange according to the following equation:

Thickness of motor flange D = (A' + LR - L) - LL

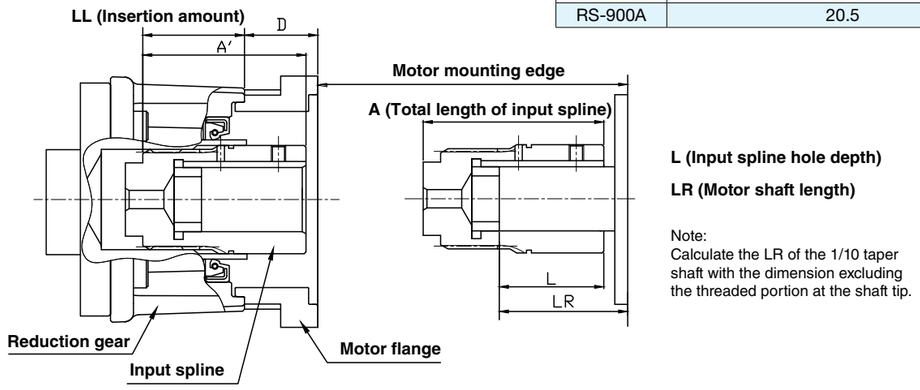

Note:
Calculate the LR of the 1/10 taper shaft with the dimension excluding the threaded portion at the shaft tip.

Note: Refer to page 23 to 25 regarding length A' and select a spline within the numerical range.

Combination of reduction gear and servomotor

1. The combinations that satisfy the following equation are recommended.
   (Rated torque of motor x 0.5) < {Rated torque of reduction gear/(Speed ratio x 0.8)} < (Rated torque of motor x 1.5)
2. Select the combinations that satisfy the following equation.
   (Maximum torque of motor) < {Momentary maximum torque of reduction gear/(Speed ratio x 0.8)}
3. Limitation must be imposed to the motor torque when the condition indicated in 1 and 2 above cannot be satisfied.
4. For more precise motor selection, the effective torque, load inertia moment, brake torque, regenerative ability, and so forth, must also be considered.

Rating table

Model			RS-50A/RS-50B				RS-260A/ RS-260B	RS-320A/ RS-320B	RS-400A	RS-900A	
Speed ratio	R		65.4	130.8	163.5	300	120	170	170	193.6	240
Ratio code			65	131	164	300	120	170	170	194	240
Rated torque	T0	Nm	490				2,548	3,136	3,920	8,820	
Rated output speed	N0	rpm	15				15	15	15	15	
Rated life	K	h	6,000				6,000	6,000	6,000	6,000	
Allowable acceleration/deceleration torque	Ts1	Nm	1,225				6,370	7,840	9,800	17,640	
Momentary maximum allowable torque	Ts2	Nm	2,450				12,740	15,680	19,600	35,280	
Allowable output speed [Duty ratio: 100%] Note 2	Ns0	rpm	60				21.5	20	20	10	
Backlash		arc.min.	1.5				1.0	1.0	1.0	1.0	
Lost motion		arc.min.	1.5				1.0	1.0	1.0	1.0	
Startup efficiency (Reference Value)		%	65				75	75	70	70	
Capacity of main bearing: Allowable moment Note 4	Mo1	Nm	1,764				12,740	20,580	24,500	44,100	
Capacity of main bearing: Momentary maximum allowable moment	Mo2	Nm	3,528				25,480	39,200	58,800	88,200	
Capacity of main bearing: Maximum thrust load	Fo	N	14,700				24,500	49,000	72,000	88,200	
Capacity of main bearing: Allowable radial load	Wr	N	9,428				39,900	54,676	66,252	101,754	
Moment of inertia ($I=GD^2/4$) Input shaft conversion value Note 3		kgm^2	$8.98x10^{-4}$ / $8.92x10^{-4}$	$4.61x10^{-4}$ / $4.60x10^{-4}$	$4.02x10^{-4}$ / $4.01x10^{-4}$	$3.896x10^{-4}$ / $3.896x10^{-4}$	$5.76x10^{-3}$	$3.40x10^{-3}$	$4.05x10^{-3}$	$1.16x10^{-2}$	$1.14x10^{-2}$
Repeated positioning accuracy (ref. value)		arc.sec	±5	±5	±5	±5	±5	±5	±5	ASK	ASK
Mass		kg	45 / 40				165 / 129	290 / 315	290	480	

Note:
1. The Rating Table shows the specification values of each individual reduction gear.
2. The allowable output speed may be limited by heat depending on the operating rate. Make sure that the surface temperature of the reduction gear does not exceed 60°C during use.
3. The inertia moment value is for the reduction gear. It does not include the inertia moment for the input gear.
4. The allowable moment will differ depending on the thrust load. Check the allowable moment diagram (p. 40).
5. For the moment rigidity and torsional rigidity, refer to the calculation of tilt angle and the torsion angle (p. 42).
6. The rated torque is the value that produces the rated service life based on operation at the rated output speed; it does not indicate the maximum load. Refer to “Glossary” (p. 30) and “Product selection flowchart” (p. 31).
7. The specifications above are based on Nabtesco evaluation methods; this product should only be used after confirming that it is appropriate for the operating conditions of your system.

Introducing Optional parts

The addition of an input shaft gearbox (option) to the RS Series realizes even higher reduction.

For details, consult our agent or nearest sales office

[Option]
Input gearbox supporting high reduction ratios

Reduction ratio 1/1.5 to 1/2

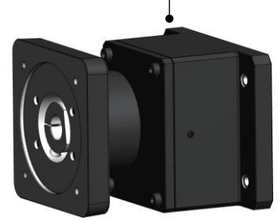

RS Series Main Unit

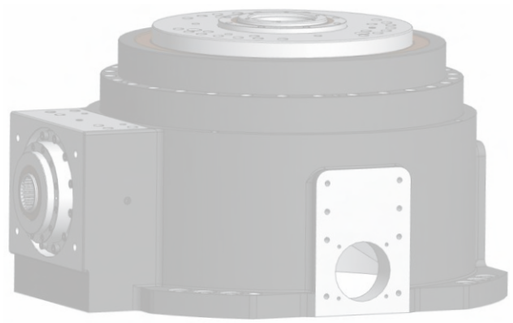

Table of ratios with input shaft gearbox mounted (example)

The table below shows example figures. Please don't hesitate to contact us when other ratios are required.

(RS-50A/B are not supported)

	Standard ratio 	Total ratio with option 
RS-50A/B	65.4 130.8 163.5 300	
RS-260A/B	120	**180**
RS-320A/B	170	**255**
RS-400A	170	**255**
RS-900A	193.6 240	**290.4** **360**

*Note that adding this option will reverse the output shaft rotation direction.

RS-50A

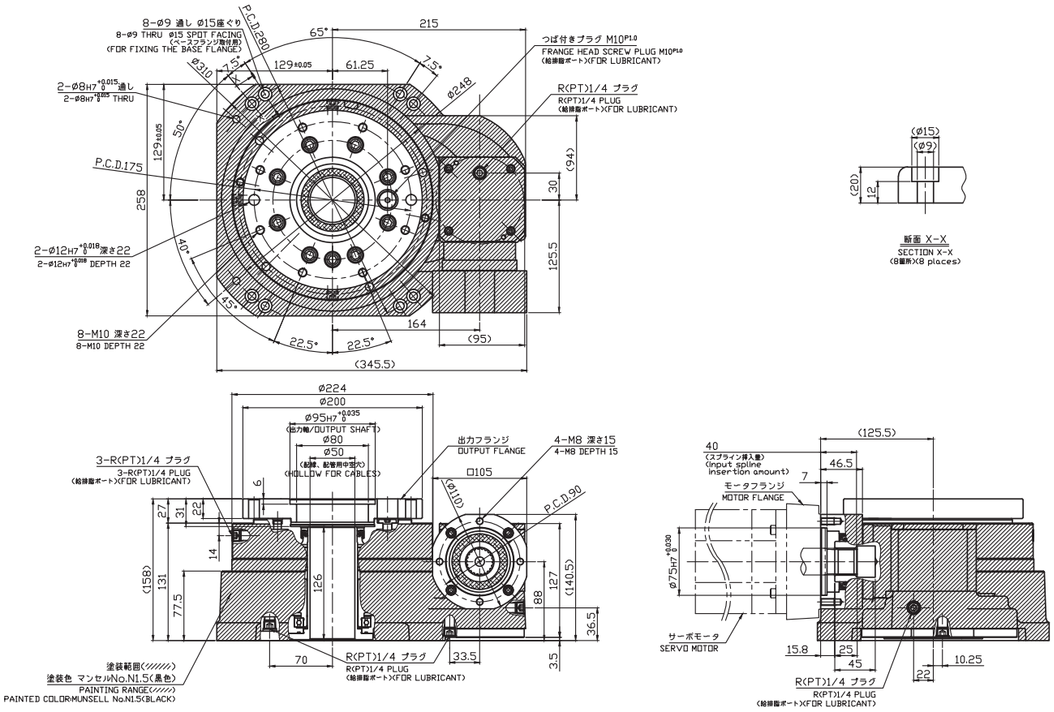

注記：全長にはモータフランジの長さは含まれておりません。
Note：The total length dose not include the length of the motor flange.

Specifications and dimensions are subject to change without notice.

RS-50B

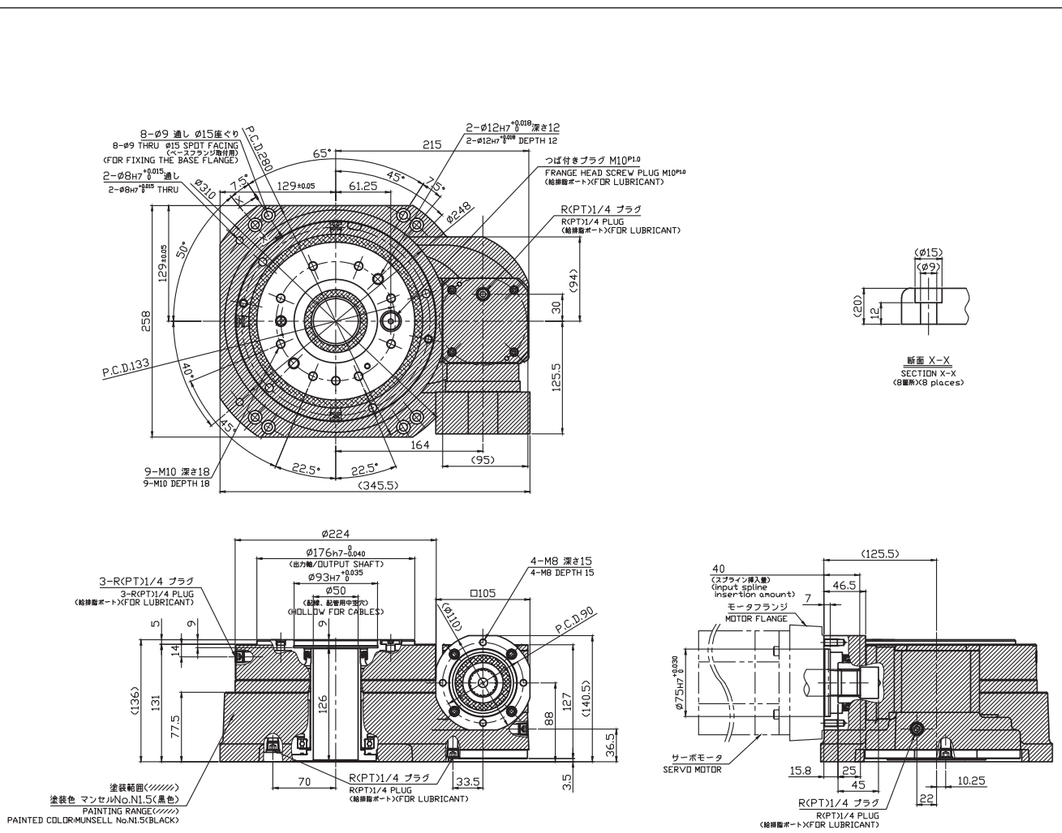

注記：全長にはモータフランジの長さは含まれておりません。
Note：The total length dose not include the length of the motor flange.

Specifications and dimensions are subject to change without notice.

RS-260A

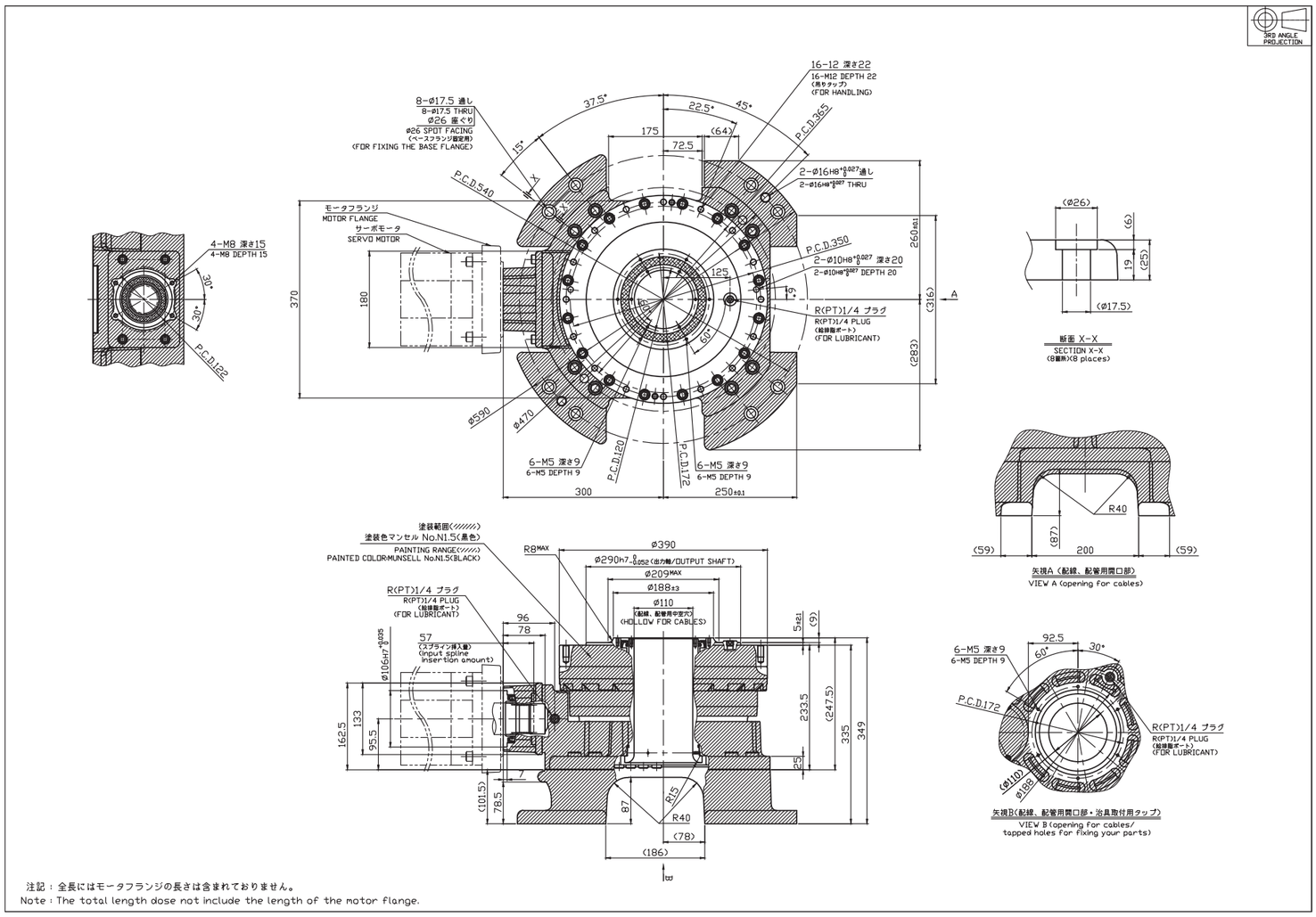

Specifications and dimensions are subject to change without notice.

RS-260B

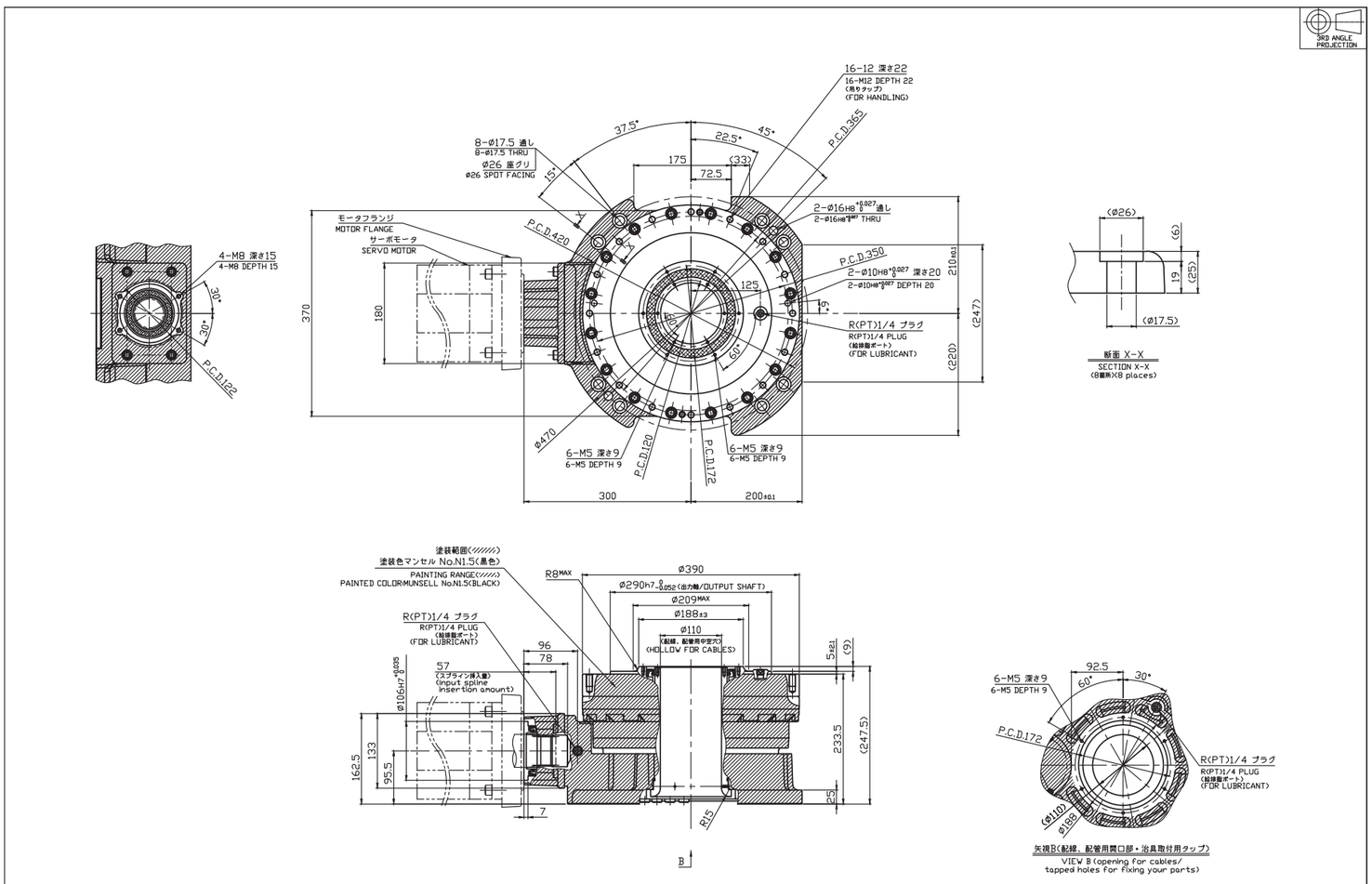

Specifications and dimensions are subject to change without notice.

RS-320A

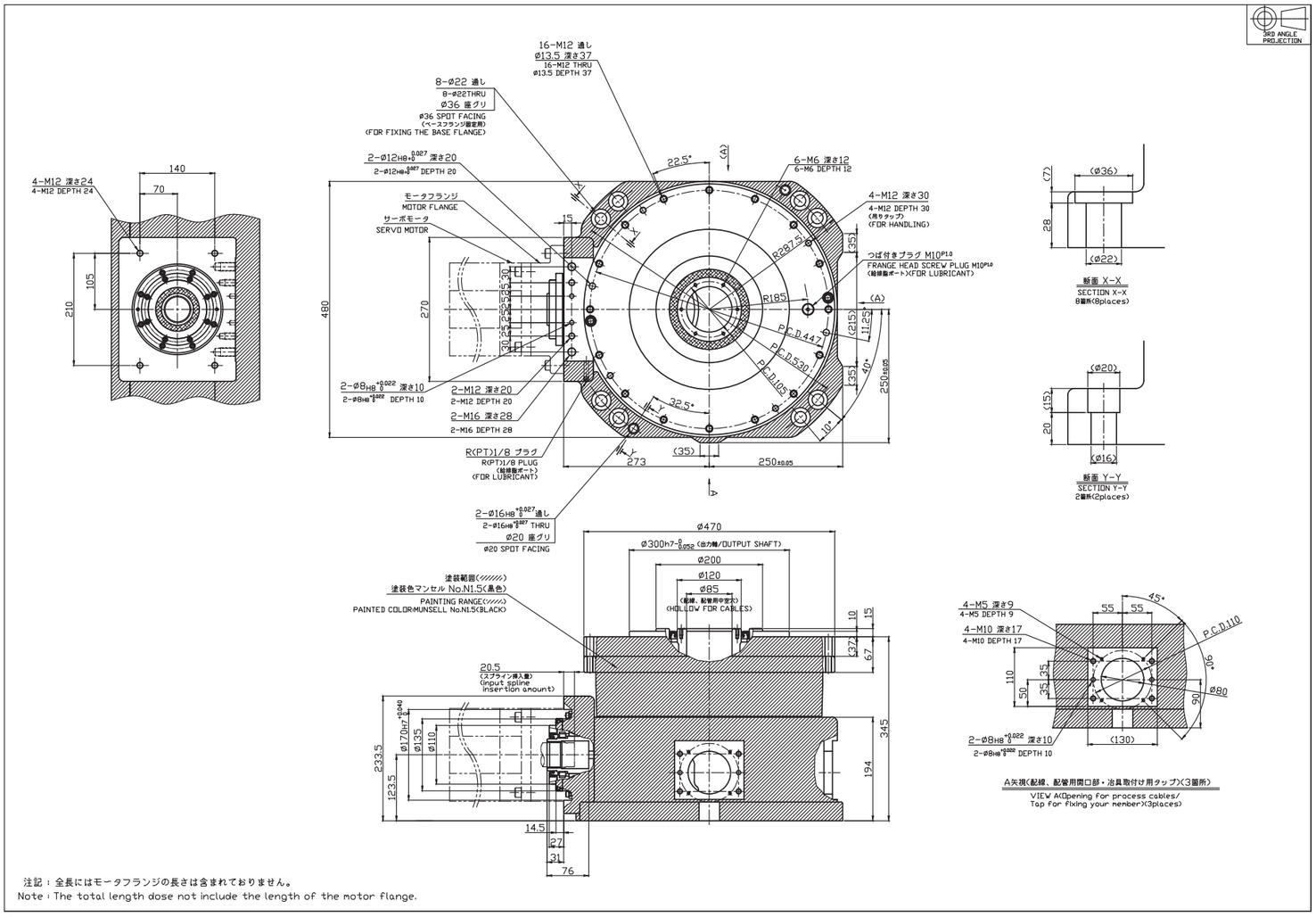

注記：全長にはモータフランジの長さは含まれておりません。
Note：The total length dose not include the length of the motor flange.

Specifications and dimensions are subject to change without notice.

RS-320B

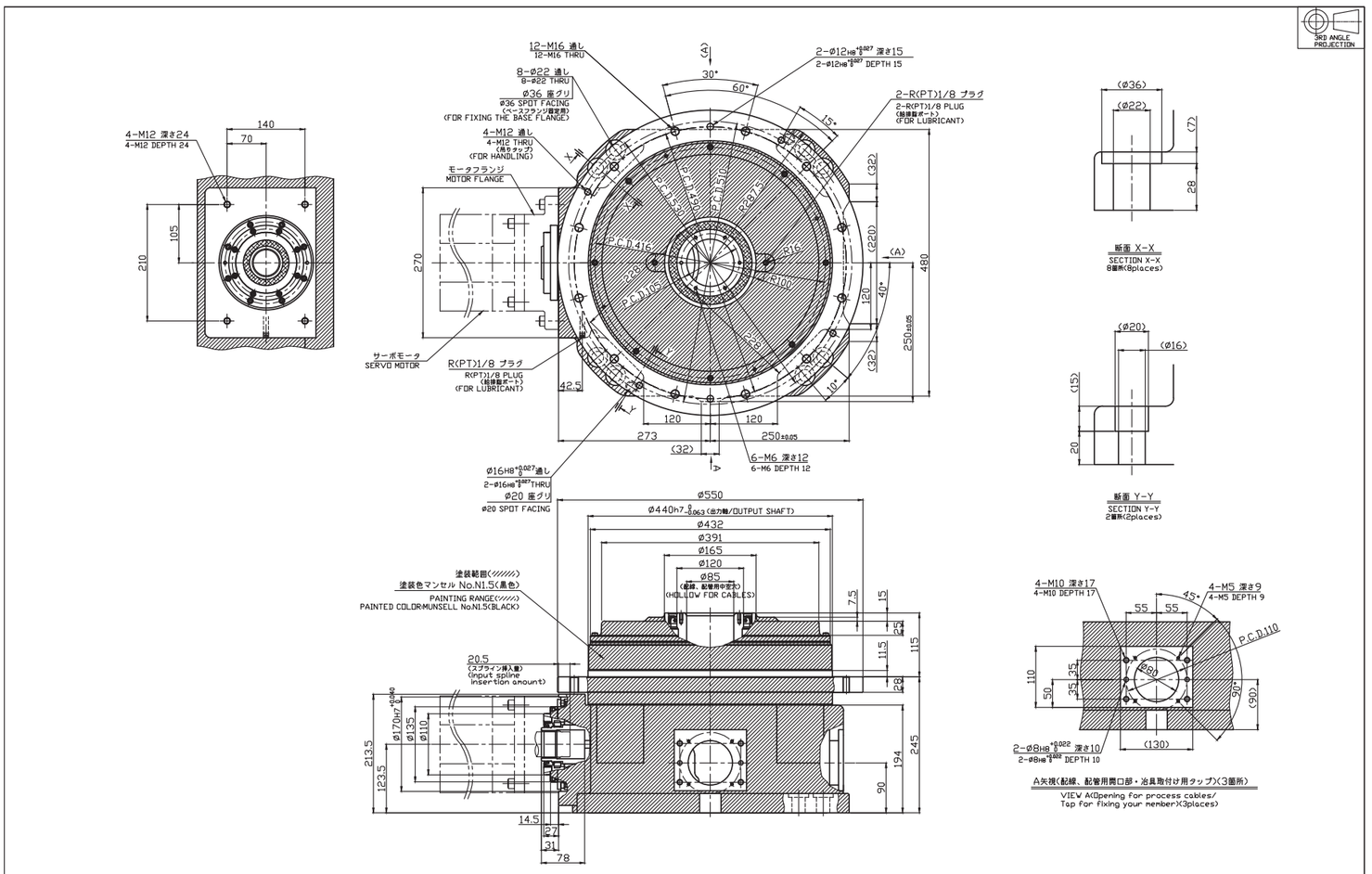

注記：全長にはモータフランジの長さは含まれておりません。
Note：The total length dose not include the length of the motor flange.

Specifications and dimensions are subject to change without notice.

RS-400A

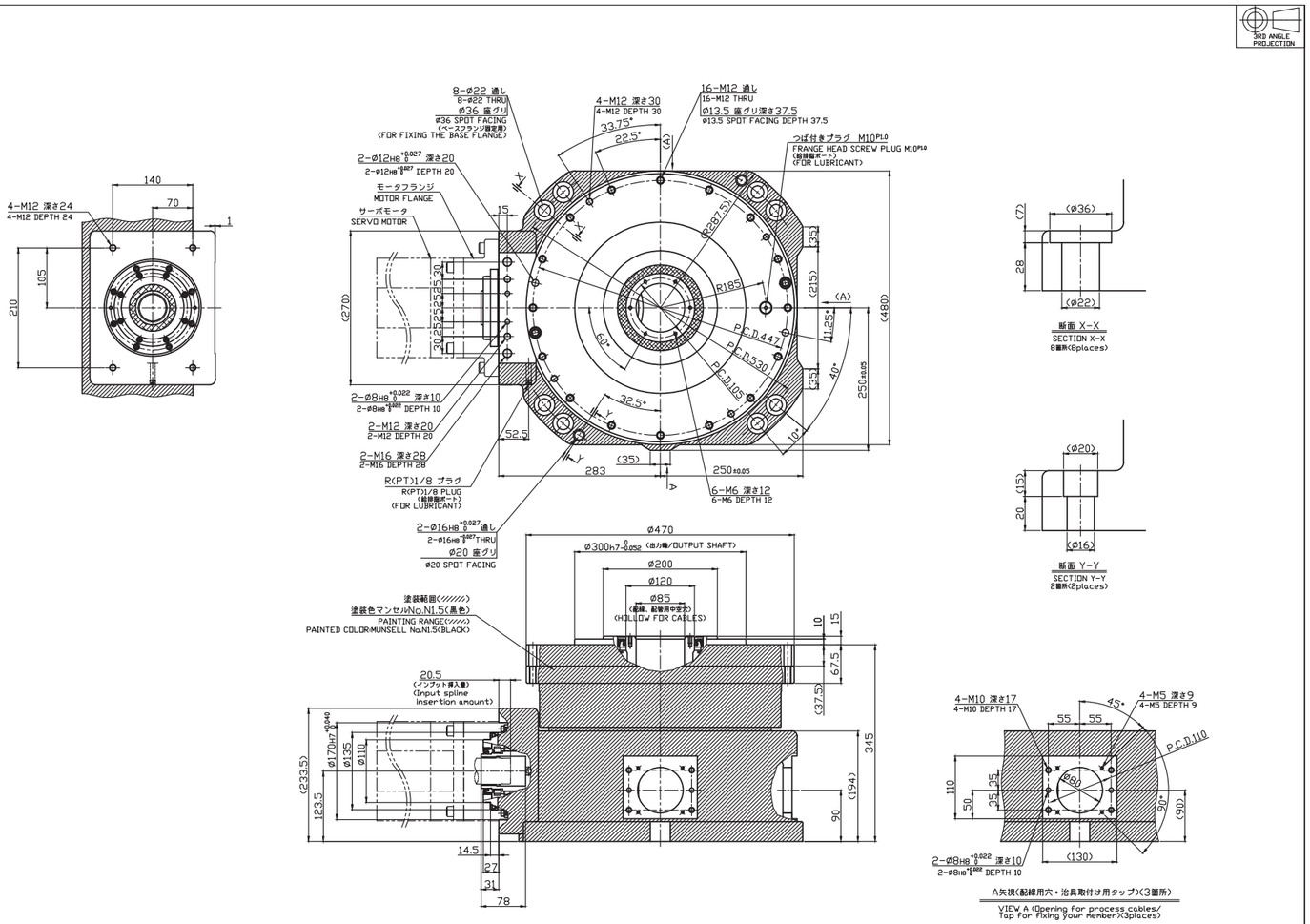

注記：全長にはモータフランジの長さは含まれておりません。
Note：The total length dose not include the length of the motor flange.

Specifications and dimensions are subject to change without notice.

RS-900A

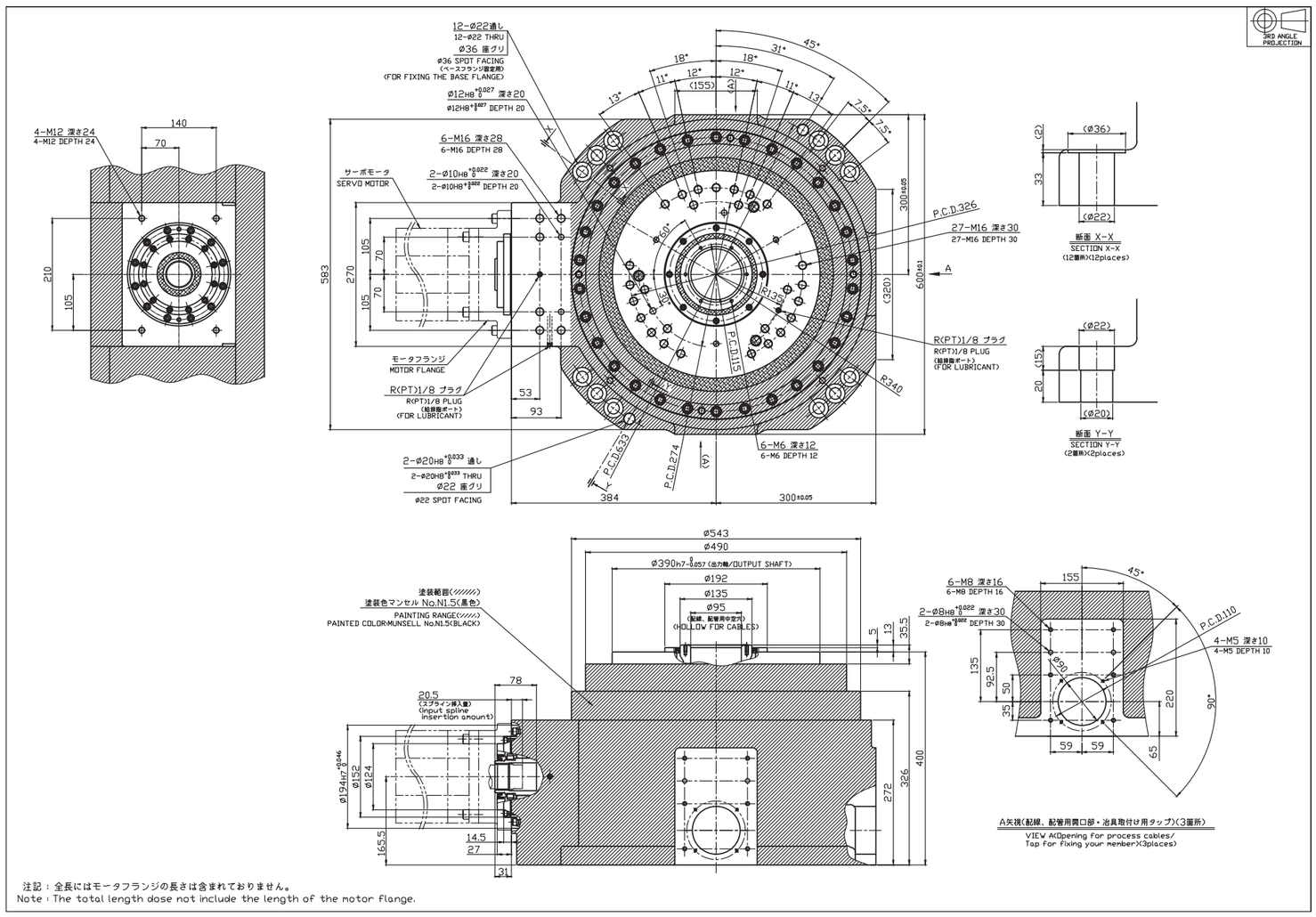

注記：全長にはモータフランジの長さは含まれておりません。
Note：The total length dose not include the length of the motor flange.

Specifications and dimensions are subject to change without notice.

Straight shaft (with key)

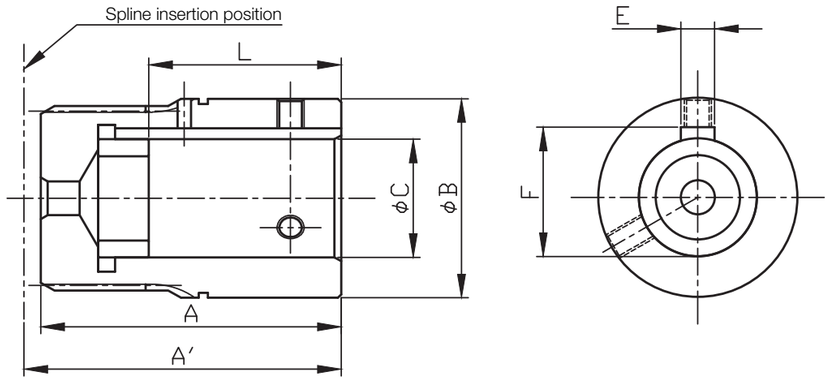

Model	Code	Order item number	Input spline dimensions (mm)								Inertia moment I (I=GD²/4) Input shaft equivalent (kgm²)
			A	A*	øB	øC		L	E	F	
RS-50A RS-50B	VXD	30WA140D*	77	74.5 to 79.5	40	19H7	+0.021 0	37	6 ±0.015	21.8	8.74×10^{-5}
	VXE	30WA140E*	77	72.5 to 79.5	40	22H7	+0.021 0	34	8 ±0.018	25.3	8.77×10^{-5}
	VXF	30WA140F*	83	79.5 to 85.5	40	24H7	+0.021 0	43	8 ±0.018	27.3	9.55×10^{-5}
	VXH	30WA140H*	70	65.5 to 72.5	30	14	+0.030 +0.012	22	5 ±0.015	16.3	4.14×10^{-5}
	VXJ	30WA140J*	68	63.5 to 70.5	30	17H7	+0.018 0	28	5 ±0.015	19.3	3.90×10^{-5}
	VXP	30WA140P*	72	67.5 to 74.5	30	16H7	+0.018 0	27	5 ±0.015	18.3	4.19×10^{-5}
RS-260A RS-260B	WXS	60WA140-*	87	85.5 to 87.5	59	32H7	+0.025 0	45	10 ±0.018	35.3	6.69×10^{-4}
	WXB	60WA140B*	89	87.5 to 90	59	35	+0.035 +0.010	72	10 ±0.018	38.3	6.40×10^{-4}
	WB2	60WA423B*	89	87.5 to 90	59	35	+0.035 +0.010	57	10 ±0.018	38.3	6.65×10^{-4}
	WXC	60WA140C*	83	81.5 to 83.5	59	28H7	+0.021 0	49	8 ±0.018	31.3	6.48×10^{-4}
RS-320A RS-320B RS-400A RS-900A	YXA	67WA422A*	68	64 to 72	45	28H7	+0.021 0	52	8 ±0.018	31.3	2.44×10^{-4}
	YXD	67WA422D*	68	64 to 72	45	28H7	+0.021 0	52	10 ±0.018	31.3	2.44×10^{-4}
	YXF	67WA140F*	145	150 to 159	56	38H7	+0.025 0	66.5	10 ±0.018	41.3	7.47×10^{-4}
	YXG	67WA140G*	95	113.5 to 120.5	55	32H7	+0.025 0	45	10 ±0.018	35.3	5.01×10^{-4}
	YXK	67WA140K*	109	126.5 to 133.5	60	35H7	+0.025 0	55	10 ±0.018	38.3	7.11×10^{-4}
	YXL	67WA140L*	81	98.5 to 105.5	55	32	+0.043 +0.018	31	10 ±0.018	35.3	4.17×10^{-4}
	YXM	67WA140M*	57	74.5 to 81.5	45	24	+0.034 +0.013	23	8 ±0.018	27.3	2.26×10^{-4}
	YXN	67WA140N*	109	126.5 to 133.5	60	35	+0.035 +0.010	55	10 ±0.018	38.3	7.11×10^{-4}
	YXP	67WA140P*	89	106.5 to 113.5	45	24H7	+0.021 0	55	8 ±0.018	27.3	3.18×10^{-4}
	YXQ	67WA140Q*	144.5	162 to 169	60	35H7	+0.025 0	55	10 ±0.018	38.3	9.38×10^{-4}
	YXR	67WA140R*	125	142.5 to 149.5	60	35	+0.035 +0.010	70	10 ±0.018	38.3	8.43×10^{-4}
	YS2	67WA140S*	142	159.5 to 166.5	60	42H7	+0.025 0	80	12 ±0.0215	45.3	8.89×10^{-4}

* Ensure that length A' of the spline insertion position is within the range indicated in the table above.

Straight shaft (without key)

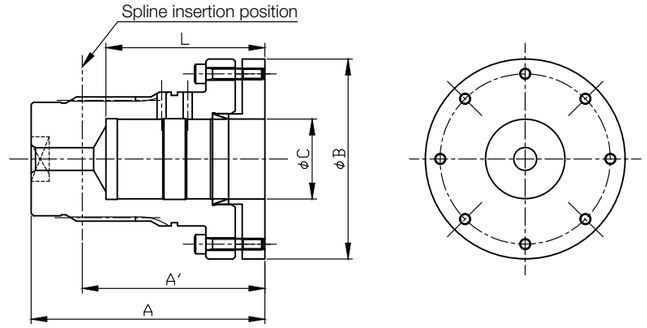

Model	Code	Order item number	Input spline dimensions (mm)						Inertia moment I (I=GD²/4) Input shaft equivalent (kgm²)	Transmission torque Nm
			A	A*	øB	øC		L		
RS-50A RS-50B	VXA	30WA421A*	79	72.5 to 81.5	68	24	+0.021 0	39	4.11×10^{-4}	77.8
	VXB	30WA421B*	68	63.5 to 70.5	63	19	+0.021 0	45	2.40×10^{-4}	52.4
	VXC	30WA421C*	77	72.5 to 79.5	68	22	+0.021 0	45	4.09×10^{-4}	68.7
	VXK	30WA421K*	77	70.5 to 79.5	63	24	+0.021 0	37	2.40×10^{-4}	77.8
	VXQ	30WA421Q*	73	66.5 to 75.5	63	19	+0.021 0	36	2.48×10^{-4}	52.4
	VQ2	30WA431Q*	73	66.5 to 75.5	63	19	+0.021 0	30	2.48×10^{-4}	52.4
RS-260A RS-260B	WXD	60WA421D*	103	86.5 to 88.5	88	35	+0.035 +0.010	70	1.52×10^{-3}	106.5
	WD2	60WA431D*	103	86.5 to 88.5	88	35	+0.035 +0.010	55	1.53×10^{-3}	106.5
RS-320A RS-320B RS-400A RS-900A	YXB	67WA421B*	86	86 to 92	75	35	+0.035 +0.010	73	7.34×10^{-4}	106.5
	YXC	67WA421C*	82	84.5 to 87	75	32H7	+0.025 0	33	7.55×10^{-4}	170.8
	YE2	67WA421E*	86	86 to 92	75	35	+0.035 +0.010	58	7.48×10^{-4}	106.5
	YXH	67WA421H*	144	140.5 to 149.5	77	42H7	+0.025 0	62	9.73×10^{-4}	277.3
RS-900A	ZS2	96WA421-*	149	143.5 to 152.5	110	55H7	+0.030 0	53	3.83×10^{-3}	657

* Ensure that length A' of the spline insertion position is within the range indicated in the table above.

1/10 tapered shaft

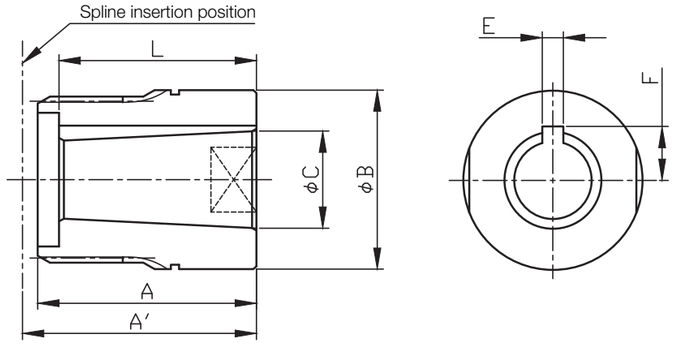

Model	Code	Order item number	Input spline dimensions (mm)								Inertia moment I (I=GD²/4) Input shaft equivalent (kgm²)
			A	A'*	øB	øC	L	E		F	
RS-50A RS-50B	VXL	30WA422L*	64	59.5 to 66.5	30	14	+0.10 0	18	4	+0.040 +0.010	8.75	3.75×10^{-5}
	VXM	30WA422M*	62	57.5 to 64.5	30	16	+0.10 0	28	5	+0.040 +0.010	9.5	3.57×10^{-5}
RS-260A RS-260B	WXA	60WA140A*	72	73.5 to 75.5	59	32	+0.10 0	65	7	+0.049 +0.013	17.75	5.08×10^{-4}
	WXE	60WA140E*	89	87.5 to 90	59	35	+0.10 0	57	6	+0.2 +0.1	18.85	6.53×10^{-4}
RS-320A RS-320B RS-400A RS-900A	YXS	67WA140-*	60	54 to 69.5	50	32	+0.10 0	60	7	+0.08 +0.043	17.75	2.06×10^{-4}
	YXE	67WA140E*	81	81.5 to 87.5	50	35	+0.10 0	55	6	+0.040 +0.010	18.55	2.74×10^{-4}

* Ensure that length A' of the spline insertion position is within the range indicated in the table above.

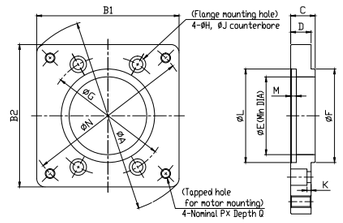

For RS-50A/B, 260A/260B

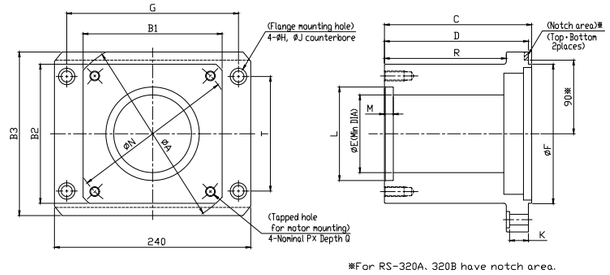

※For RS-320A, 320B have notch area.

For RS-320A/320B, 400A, 900A

Model	Code	Order item number	Flange outer dimensions (mm)								Reduction gear mounting dimensions (mm)						Motor mounting dimensions (mm)				
			øA	B1	B2	B3	R	C	D	øE	øF		G	T	øH	øJ	K	øL	M	øN	P	Q
RS-50A RS-50B	CA	35PA203CA*	111.4	ø111.4		-	-	41	36	69	75h7	0 -0.030	90	-	9	14	22	50 +0.036 +0.011	3.5	70	M5	9
	CB	35PA203CB*	108	ø108				41	36	69								70 +0.037 +0.012	5.5	90	M5	9
	CC	35PA203CC*	108	ø108				41	36	69								70 +0.037 +0.012	5.5	90	M6	11
	CD	35PA203CD*	144	□129				43	38	69								80 +0.037 +0.012	6	100	M6	11
	CE	35PA203CE*	144	□129				43	38	69								95 +0.038 +0.013	6	115	M6	11
	CF	35PA203CF*	144	□129				43	38	69								95 +0.038 +0.013	6	115	M8	15
	CG	35PA203CG*	176	□130				45	40	69								110 +0.038 +0.013	7	135	M8	15
	CH	35PA203CH*	176	□130				45	40	69								110 +0.038 +0.013	11	145	M8	15
	CJ	35PA203CJ*	176	□130				60	55	69								110 +0.038 +0.013	7	145	M8	15
	CK	35PA203CK*	232	□176				45	40	69								114.3 +0.038 +0.013	5	200	M12	22
	CL	35PA203CL*	232	□176				45	40	69								115 +0.038 +0.013	6	165	M8	15
	CM	35PA203CM*	232	□176				45	40	69								130 +0.039 +0.014	6	165	M10	18
	CN	35PA203CN*	295	□220				45	40	69								200 +0.040 +0.015	6	235	M12	22
	CP	35PA203CP*	176	□130				50	45	69								80 +0.037 +0.012	6	100	M6	11
	CQ	35PA203CQ*	144	□129				48	43	69								95 +0.038 +0.013	6	115	M8	15
	CR	35PA203CR*	170	□130				53	48	69								110 +0.038 +0.013	11	145	M8	15
	CT	35PA203CT*	176	□130				45	40	69								110 +0.038 +0.013	7	130	M8	15
	CU	35PA203CU*	111.4	ø111.4				41	36	67								60 +0.037 +0.012	3.5	75	M5	9
RS-260A RS-260B	GA	35PA203GA*	144	□129		-	-	43	38	96	106h7	0 -0.035	122	-	9	14	22	95 +0.038 +0.013	7	115	M8	15
	GB	35PA203GB*	176	□130				45	40	96								110 +0.038 +0.013	7	135	M8	15
	GC	35PA203GC*	176	□130				45	40	96								110 +0.038 +0.013	7	145	M8	15
	GD	35PA203GD*	233	□176				45	40	96								114.3 +0.038 +0.013	5	200	M12	22
	GE	35PA203GE*	233	□176				45	40	96								130 +0.039 +0.014	6	165	M10	18
	GF	35PA203GF*	295	□220				45	40	96								200 +0.040 +0.015	6	235	M12	22
	GG	35PA203GG*	170	□130				55	50	96								110 +0.038 +0.013	7	145	M8	15
	GH	35PA203GH*	232	□176				55	50	96								114.3 +0.038 +0.013	5	200	M12	22
	GJ	35PA203GJ*	170	□130				50	45	96								110 +0.038 +0.013	7	145	M8	15
	GK	35PA203GK*	175	□130				45	40	96								110 +0.038 +0.013	7	130	M8	15
	GL	35PA203GL*	144	□129				43	38	80								80 +0.037 +0.012	6	100	M6	11
	GQ	35PA203GQ*	295	□220				45	40	96								180 +0.054 +0.014	6	215	M12	22

Motor flange External dimensions

Model	Code	Order item number	Flange outer dimensions (mm)								Reduction gear mounting dimensions (mm)							Motor mounting dimensions (mm)					
			øA	B1	B2	B3	R	C	D	øE	øF		G	T	øH	øJ	K	øL		M	øN	P	Q
RS-320A RS-320B RS-400A	YS	67WA203-*	247	□174		174	36.5	65.5	61.5	114.3	170h7	0 -0.040	210	140	13	-	25	114.3H7	+0.035 0	10	200	M12	24
	YA	67WA203A*	238	□174		174	44.5	75.5	71.5	114.3						20		114.3H7	+0.035 0	10	200	M12	24
	YB	67WA203B*	318	240	220	-	75.5	71.5	148								25.5	200H7	+0.046 0	10	235	M12	24
	YC	67WA203C*	318	240	220	-	85.5	81.5	148									200H7	+0.046 0	10	235	M12	24
	YD	67WA203D*	245	□180		200	149	180	176	114.3							25	114.3H7	+0.035 0	10	200	M12	24
	YE	67WA203E*	318	240	220	-	124	120	148									200H7	+0.046 0	10	235	M12	24
	YG	67WA203G*	318	240	220	-	80	76	148									200H7	+0.046 0	10	235	M12	24
	YH	67WA203H*	306	240	200	-	110	106	114.3									114.3H7	+0.035 0	10	200	M12	24
	YJ	67WA203J*	310	ø180		220	75	104	100	110						-		110H7	+0.035 0	10	145	M8	16
	YK	67WA203K*	306	240	200	-	139	135	114.3							20		114.3H7	+0.035 0	10	200	M12	24
	YL	67WA203L*	245	□180		200	134	165	161	114.3								114.3H7	+0.035 0	10	200	M12	24
	YM	67WA203M*	198	□145		200	5	79.5	75.5	130					13.5			130	+0.054 +0.014	10	165	M10	18
RS-900A	ZA	96WA203A*	238	□174		200	34.5	65.5	61.5	114.3	194h7	0 -0.046	210	140	13	20	25	114.3H7	+0.035 0	10	200	M12	24
	ZB	96WA203B*	247	□180		200	134	165	161	114.3								114.3H7	+0.035 0	10	200	M12	24
	ZC	96WA203C*	259	176	200		48.5	79.5	75.5	114.3								114.3H7	+0.035 0	10	200	M12	24
	ZD	96WA203D*	313	240	213	-	80.5	76.5	180								25.5	200H7	+0.046 0	10	235	M12	24
	ZE	96WA203E*	238	□174		200	79.5	110.5	106.5	114.3							25	114.3H7	+0.035 0	10	200	M12	24
	ZF	96WA203F*	318	240	220	-	85.5	81.5	175						13.5		25.5	200H7	+0.046 0	10	235	M12	24
	ZH	96WA203H*	307	240	213	-	124.5	120.5	180								25	200H7	+0.046 0	10	235	M12	24

Technical Information

- Considering the use of the RS series
- Glossary
- Product selection
  - Product selection flowchart
  - Model code selection examples
  - Allowable moment diagram
- Technical data
  - No-load running torque
  - Calculation of tilt angle and torsion angle
- Design points
  - Reduction gear installation components
- Appendix
  - Inertia moment calculation formula
  - Troubleshooting checksheet

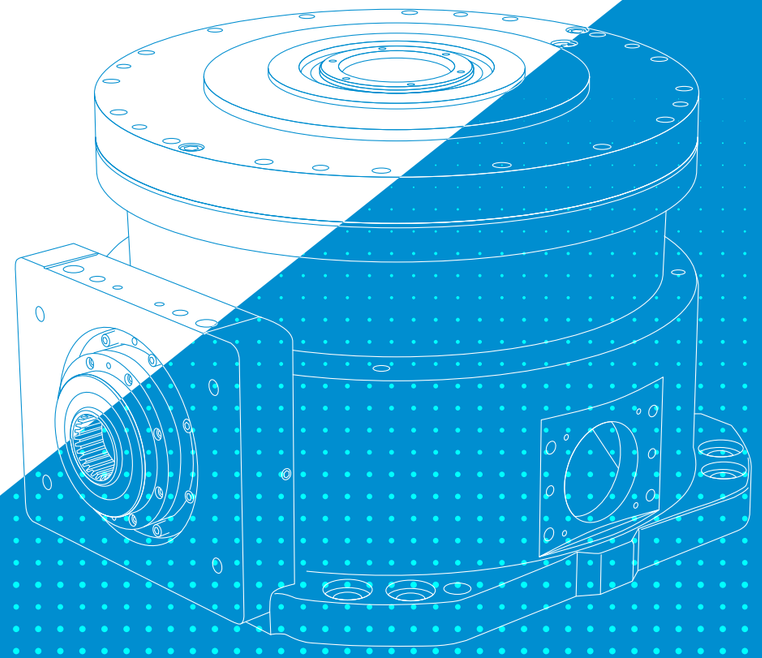

This product features high precision and high rigidity, however, it is necessary to strictly comply with various restrictions and make considerations to maximize the product's features. Please read this technical document thoroughly and select and adopt an appropriate model based on the actual operating environment, method, and conditions at your facility.

Export

- When this product is exported from Japan, it may be subject to the export regulations provided in the "Foreign Exchange Order and Export Trade Control Order". Be sure to take sufficient precautions and perform the required export procedures in advance if the final operating party is related to the military or the product is to be used in the manufacture of weapons, etc.

Application

- If failure or malfunction of the product may directly endanger human life or if it is used in units which may injure the human body (atomic facilities, space equipment, medical equipment, safety units, etc.), examination of individual situations is required. Contact our agent or nearest business office in such a case.

Safety measures

- Although this product has been manufactured under strict quality control, a mistake in operation or misuse can result in breakdown or damage, or an accident resulting in injury or death. Be sure to take all appropriate safety measures, such as the installation of independent safeguards.

Product specifications indicated in this catalog

- The specifications indicated in this catalog are based on Nabtesco evaluation methods. This product should only be used after confirming that it is appropriate for the operating conditions of your system.

Operating environment

Use the reduction gear under the following environment:

- Location where the ambient temperature is within the range from -10°C to 40°C.
- Location where the humidity is less than 85% and no condensation occurs.
- Location where the altitude is less than 1000 m.
- Well-ventilated location

Do not install the reduction gear at the following locations.

- Locations where a lot of dust is collected.
- Outdoor areas that are directly affected by wind and rain
- Locations near to areas that contains combustible, explosive, or corrosive gases and flammable materials.
- Locations that are heated due to heat transfer and radiation from peripherals and direct sun.
- Locations where the performance of the motor can be affected by magnetic fields or vibration.

Note 1: If the required operating environment cannot be established/met, contact us in advance.

2: When using the reduction gear under special conditions (clean room, equipment for food, concentrated alkali, high-pressure steam, etc.), contact our agent or nearest business office in advance.

Maintenance

- The standard replacement time for lubricant is 20,000 hours. However, when operation involves a reduction gear surface temperature above 40°C, the state of degradation of the lubricant should be checked in advance of that and the grease replaced earlier as necessary.

Reduction gear temperature

- When the reduction gear is used under high load and at a high duty ratio, it may overheat and the surface temperature may exceed the allowable temperature. Be aware of conditions so that the surface temperature of the reduction gear does not exceed 60°C while it is in operation. There is a possibility of damage (to the product) if the surface temperature exceeds 60°C.

Reduction gear output rotation angle

- When the range of the rotation angle is small (10 degrees or less), the service life of the reduction gear may be reduced due to poor lubrication or the internal parts being subject to a concentrated load.

  Note: Contact us in case the rotation angle is 10 degrees or less.

Manuals

- Safety information and detail product instructions are indicated in the operation manual.
  The operation manual can be downloaded from the following website.
  https://precision.nabtesco.com/

Rated service life

The lifetime resulting from the operation with the rated torque and the rated output speed is referred to as the "rated service life".

Allowable acceleration/deceleration torque

When the machine starts or stops, the load torque to be applied to the reduction gear is larger than the constant-speed load torque due to the effect of the inertia torque of the rotating part. In such a situation, the allowable torque during acceleration/deceleration is referred to as "allowable acceleration/deceleration torque".

Note: Be careful that the load torque, which is applied at startup and stop, does not exceed the allowable acceleration/deceleration torque.

Momentary maximum allowable torque

A large torque may be applied to the reduction gear due to execution of emergency stop or by an external shock. In such a situation, the allowable value of the momentary applied torque is referred to as "momentary maximum allowable torque".

Note: Be careful that the momentary excessive torque does not exceed the momentary maximum allowable torque.

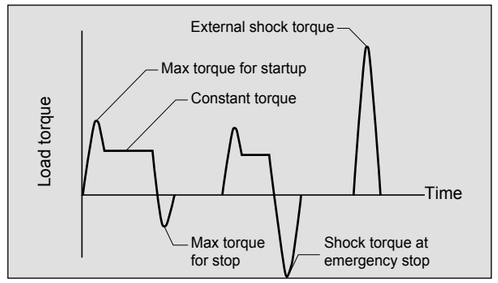

Allowable output speed

The allowable value for the reduction gear's output speed during operation without a load is referred to as the "allowable output speed".

Notes: Depending on the conditions of use (duty ratio, load, ambient temperature), the reduction gear temperature may exceed 60°C even when the speed is under the allowable output speed. In such a case, either take cooling measures or use the reduction gear at a speed that keeps the surface temperature at 60°C or lower.

Duty ratio

The duty ratio is defined as the ratio of the sum total time of acceleration, constant speed, and deceleration to the cycle time of the reduction gear.

Torsional rigidity, lost motion, Backlash (hysteresis loss)

Applying torque to the reduction gear output shaft with the input shaft fixed generates torsion in the reduction gear. The shifting torsion amount (torsion angle) is drawn with a hysteresis curve, from which the spring constant, lost motion, and backlash (hysteresis loss) can be derived. The spring constant is the ratio of the torque and torsion angle from 1/2 rated torque to rated torque (b/a). Lost motion is the torsion angle in the low-load area (±3% of rated torque). Backlash (hysteresis loss) is the torsion angle at zero load torque.

<Hysteresis curve>

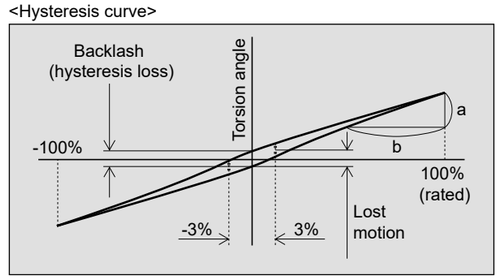

Startup efficiency

The efficiency of the moment when the reduction gear starts up is referred to as "startup efficiency".

No-load running torque (input shaft)

The torque for the input shaft that is required to run the reduction gear without load is referred to as "no-load running torque".

Allowable moment and maximum thrust load

The external load moment may be applied to the reduction gear during normal operation. The allowable values of the external moment and the external axial load at this time are each referred to as "allowable moment" and "maximum thrust load".

Momentary maximum allowable moment

A large moment may be applied to the reduction gear due to an emergency stop or external shock. The allowable value of the momentary applied moment at this time is referred to as "momentary maximum allowable moment."

Note: Be careful so that the momentary excessive moment does not exceed the momentary maximum allowable moment.

Product selection flowchart

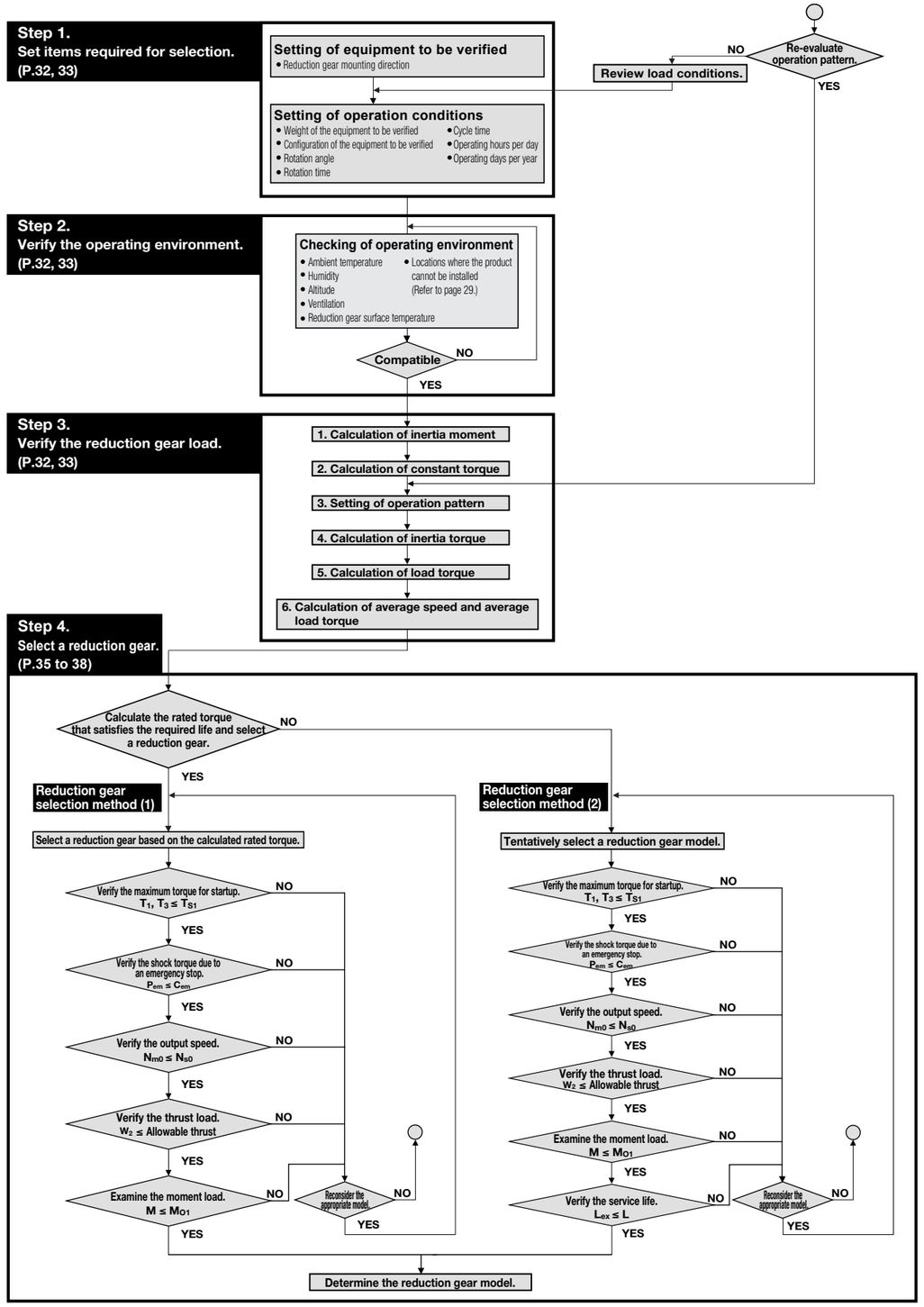

A limitation is imposed on the motor torque value according to the momentary maximum allowable torque of the selected reduction gear. (Refer to page 39.)

Model code selection examples

With horizontal rotational transfer

Step 1. Set the items required for selection.

Setting item	Setting
Reduction gear mounting direction	Vertical shaft installation
Equipment weight to be considered	
W_A ——— Disk weight (kg)	2,000
W_B ——— Work weight (kg)	100×4 pieces
Equipment configuration to be considered	
D_1 ——— Disk: D dimension (mm)	1,200
a ——— Workpiece: a dimension (mm)	100
b ——— Workpiece: b dimension (mm)	300
D_2 ——— Workpiece: P.C.D. (mm)	1,000
Operation conditions	
θ ——— Rotation angle (°)*1	180
$[t_1+t_2+t_3]$ ——— Rotation time (s)	2.5
$[t_4]$ ——— Cycle time (s)	20
Q_1 ——— Equipment operation hours per day (hours/day)	12
Q_2 ——— Equipment operation days per year (days/year)	365

*1. When the range of the rotation angle is small (10 degrees or less), the rating life of the reduction gear may be reduced due to poor lubrication or the internal parts being subject to a concentrated load.

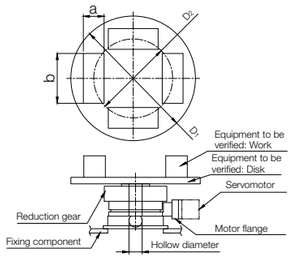

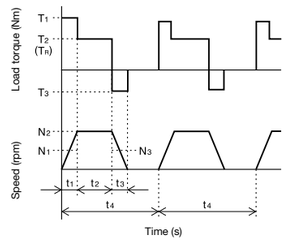

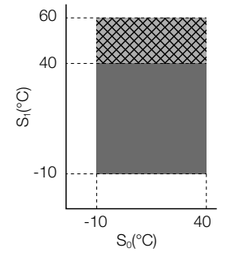

Step 2. Verify the operating environment.

Checkpoint	Standard value
S_0 ——— Ambient temperature (°C)	-10 to +40
S_1 ——— Reduction gear surface temperature (°C)	60 or less

Note: Refer to "Operating environment" on p. 29 for values other than those listed above.

Step 3-1. Examine the reduction gear load

Setting item		Calculation formula	Selection examples
(1) Calculate the inertia moment based the calculation formula on page 45.			
I_R	Load inertia moment (kgm^2)	$I_{R1}=\frac{W_A\times\left(\frac{D_1}{2\times1{,}000}\right)^2}{2}$ $I_{R2}=\left[\frac{W_B}{12}\left\{\left(\frac{a}{1{,}000}\right)^2+\left(\frac{b}{1{,}000}\right)^2\right\}+W_B\times\left(\frac{D_2}{2\times1{,}000}\right)^2\right]\times n$ I_{R1} = Disk inertia moment I_{R2} = Work inertia $I_R = I_{R1} + I_{R2}$ n = Number of Workpieces	$I_{R1}=\frac{2{,}000\times\left(\frac{1{,}200}{2\times1{,}000}\right)^2}{2}$ $=360\ (kgm^2)$ $I_{R2}=\left[\frac{100}{12}\left\{\left(\frac{100}{1{,}000}\right)^2+\left(\frac{300}{1{,}000}\right)^2\right\}+100\times\left(\frac{1{,}000}{2\times1{,}000}\right)^2\right]\times4$ $=103.3\ (kgm^2)$ $I_R = 360 + 103.3$ $=463.3\ (kgm^2)$
(2) Examine the constant torque.			
T_R	Constant torque (Nm)	$T_R=(W_A+W_B)\times9.8\times\frac{D_{in}}{2\times1{,}000}\times\mu$ μ = Friction factor Note: Use 0.015 for this example as the load is applied to the bearing of the Precision Reduction Gear RV™. D_{in} = Rolling diameter: Use the pilot diameter which is almost equivalent to the rolling diameter in this selection calculation. Note: If the reduction gear model is not determined, select the following pilot diameter: Maximum pilot diameter: 490 (mm) (RS-900A)	$T_R=(2{,}000+100\times4)\times9.8\times\frac{490}{2\times1{,}000}\times0.015$ $=86.4\ (Nm)$

Step 3-2: Proceed to p. 34.

Model code selection examples

With vertical rotational transfer

Step 1. Set the items required for selection.

Setting item	Setting
Reduction gear mounting direction	Horizontal shaft installation
Equipment weight to be considered	
W_C ——— Mounted work weight (kg)	2,000
Equipment configuration to be considered	
a ——— a dimension (mm)	500
b ——— b dimension (mm)	500
R ——— R dimension (mm)	320
Operation conditions	
θ ——— Rotation angle (°)*1	90
$[t_1+t_2+t_3]$ ——— Rotation time (s)	1.5
$[t_4]$ ——— Cycle time (s)	20
Q_1 ——— Equipment operation hours per day (hours/day)	24
Q_2 ——— Equipment operation days per year (days/year)	365

*1. When the range of the rotation angle is small (10 degrees or less), the rating life of the reduction gear may be reduced due to poor lubrication or the internal parts being subject to a concentrated load.

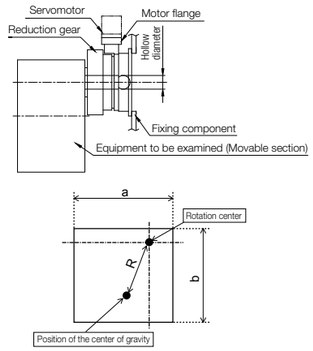

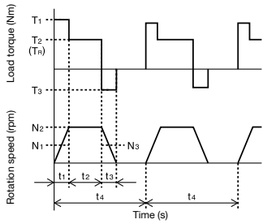

Step 2. Verify the operating environment.

Checkpoint	Standard value
S_0 ——— Ambient temperature (°C)	-10 to +40
S_1 ——— Reduction gear surface temperature (°C)	60 or less

Note: Refer to "Operating environment" on p. 29 for values other than those listed above.

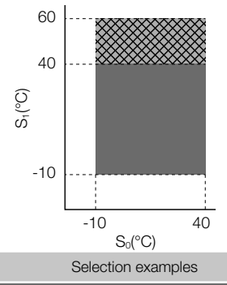

Step 3-1. Examine the reduction gear load.

Setting item		Calculation formula	Selection examples
(1) Calculate the inertia moment.			
I_R	Load inertia moment (kgm^2)	$I_R=\frac{W_C}{12}\times\left\{\left(\frac{a}{1{,}000}\right)^2+\left(\frac{b}{1{,}000}\right)^2\right\}+W_C\times\left(\frac{R}{1{,}000}\right)^2$	$I_R=\frac{2{,}000}{12}\times\left\{\left(\frac{500}{1{,}000}\right)^2+\left(\frac{500}{1{,}000}\right)^2\right\}+2{,}000\times\left(\frac{320}{1{,}000}\right)^2$ $=288.1\ (kgm^2)$
(2) Examine the constant torque.			
T_R	Constant torque (Nm)	$T_R=W_C\times9.8\times\frac{R}{1{,}000}$	$T_R=2{,}000\times9.8\times\frac{320}{1{,}000}$ $=6{,}272\ (Nm)$

Step 3-2: Proceed to p. 34.
(Refer to "With horizontal rotational transfer" for selection examples.)

Step 3-2. Set items required for selection.

Setting item	Calculation formula	Selection examples (With horizontal rotational transfer)
(1) Set the acceleration/deceleration time, constant-speed operation time, and output speed.		
t_1 ——— Acceleration time (s) t_2 ——— Constant-speed operation time (s) t_3 ——— Deceleration time (s) N_2 ——— Constant speed (rpm)	• The operation pattern does not need to be verified if it is already set. • If the operation pattern has not been determined, use the following formula to calculate the reference operation pattern. $t_1=t_3=\text{Rotation}\ [t_1+t_2+t_3]-\frac{\theta}{\left(\frac{N_2}{60}\times360\right)}$ $t_2=\text{Rotation}\ [t_1+t_2+t_3]-(t_1+t_3)$ Note: 1. Assume that t_1 and t_3 are the same. Note: 2. N_2 = 15 rpm if the reduction gear output speed (N_2) is not known. Note: 3. If t_1 and t_3 is less than 0, increase the output speed or extend the rotation time.	Examine the operation pattern using N_2 = 15 rpm as the reduction gear output speed is unknown. $t_1=t_3=2.5-\frac{180}{\left(\frac{15}{60}\times360\right)}=0.5$ (s) $t_2=2.5-(0.5+0.5)=1.5$ (s) $\therefore t_1=t_3=0.5$ (s) $t_2=1.5$ (s) $N_2=15$ (rpm)
N_1 ——— Average speed for startup (rpm)	$N_1=\frac{N_2}{2}$	$N_1=\frac{15}{2}=7.5$ (rpm)
N_3 ——— Average speed for stop (rpm)	$N_3=\frac{N_2}{2}$	$N_3=\frac{15}{2}=7.5$ (rpm)
(2) Calculate the inertia torque for acceleration/deceleration.		
T_A ——— Inertia torque for acceleration (Nm)	$T_A=\left\{\frac{I_R\times(N_2-0)}{t_1}\right\}\times\frac{2\pi}{60}$	$T_A=\left\{\frac{463.3\times(15-0)}{0.5}\right\}\times\frac{2\pi}{60}$ $=1{,}455$ (Nm)
T_D ——— Inertia torque for deceleration (Nm)	$T_D=\left\{\frac{I_R\times(0-N_2)}{t_3}\right\}\times\frac{2\pi}{60}$	$T_D=\left\{\frac{463.3\times(0-15)}{0.5}\right\}\times\frac{2\pi}{60}$ $=-1{,}455$ (Nm)
(3) Calculate the load torque for acceleration/deceleration.		
T_1 ——— Maximum torque for startup (Nm)	$T_1=\lvert T_A+T_R\rvert$ T_R : Constant torque With horizontal rotational transfer Refer to page 32 With vertical rotational transfer Refer to page 33	$T_1=\lvert1{,}455+86.4\rvert$ $=1{,}541.4$ (Nm)
T_2 ——— Constant maximum torque (Nm)	$T_2=\lvert T_R\rvert$	$T_2=86.4$ (Nm)
T_3 ——— Maximum torque for stop (Nm)	$T_3=\lvert T_D+T_R\rvert$ T_R : Constant torque With horizontal rotational transfer Refer to page 32 With vertical rotational transfer Refer to page 33	$T_3=\lvert-1{,}455+86.4\rvert$ $=1{,}368.6$ (Nm)
(4)-1 Calculate the average speed.		
N_m ——— Average speed (rpm)	$N_m=\frac{t_1\times N_1+t_2\times N_2+t_3\times N_3}{t_1+t_2+t_3}$	$N_m=\frac{0.5\times7.5+1.5\times15+0.5\times7.5}{0.5+1.5+0.5}$ $=12$ (rpm)
(4)-2 Calculate the average load torque.		
T_m ——— Average load torque (Nm)	$T_m=\sqrt[10/3]{\frac{t_1\times N_1\times T_1^{10/3}+t_2\times N_2\times T_2^{10/3}+t_3\times N_3\times T_3^{10/3}}{t_1\times N_1+t_2\times N_2+t_3\times N_3}}$	$T_m=\sqrt[10/3]{\frac{0.5\times7.5\times1{,}541.4^{10/3}+1.5\times15\times86.4^{10/3}+0.5\times7.5\times1{,}368.6^{10/3}}{0.5\times7.5+1.5\times15+0.5\times7.5}}$ $=963.9$ (Nm)

Go to page 35 if the reduction gear model is verified based on the required life.
Go to page 37 if the service life is verified based on the reduction gear model.

Step 4. Select a reduction gear.

Reduction gear selection method (1) Calculate the required torque based on the load conditions and required life and select a reduction gear.

Setting/verification item	Calculation formula	Selection examples (With horizontal rotational transfer)
(1) Calculate the rated torque for the reduction gear that satisfies the required life.		
L_{ex} Required life (year)	Based on the operation conditions	20 years
Q_{1cy} Number of cycles per day (times)	$Q_{1cy}=\frac{Q_1\times60\times60}{t_4}$	$Q_{1cy}=\frac{12\times60\times60}{20}$ = 2,160 (times)
Q_3 Operating hours of reduction gear per day (h)	$Q_3=\frac{Q_{1cy}\times(t_1+t_2+t_3)}{60\times60}$	$Q_3=\frac{2{,}160\times(0.5+1.5+0.5)}{60\times60}$ =1.5 (h)
Q_4 Operating hours of reduction gear per year (h)	$Q_4=Q_3\times Q_2$	Q_4 =1.5×365 =548 (h)
L_{hour} Reduction gear service life (h)	$L_{hour}=Q_4\times L_{ex}$	L_{hour} = 548 × 20 = 10,960 (h)
T_O' Reduction gear rated torque that satisfies the required life (Nm)	$T_O'=T_m\times\sqrt[3]{\frac{L_{hour}}{K}}\times\frac{N_m}{N_0}$ K : Reduction gear rated life (h) N_0 : Reduction gear rated output speed (rpm)	T_O' = 963.9 $\times\sqrt[3]{\frac{10{,}960}{6{,}000}}\times\frac{12}{15}$ = 1.080 (Nm)
(2) Tentatively select a reduction gear model based on the calculated rated torque.		
Tentative selection of the reduction gear	Select a reduction gear for which the rated torque of the reduction gear [T_O]*1 is equal to or greater than the rated torque of the reduction gear that satisfies the required life [T_O']. *1 [T_O]: Refer to the rating table on page 13.	RS-260A that meets the following condition is tentatively selected: [T_O] 2,548 (Nm) ≥ [T_O'] 1.080 (Nm)
(3) Verify the maximum torque for startup and stop.		
Verification of maximum torque for startup and stop	Check the following conditions: The allowable acceleration/deceleration torque [T_{S1}]*1 is equal to or greater than the maximum starting torque [T_1]*2 and maximum stopping torque [T_3]*2 If the tentatively selected reduction gear is outside of the specifications, change the reduction gear model. *1 [T_{S1}]: Refer to the rating table on page 13. *2 [T_1] and [T_3]: Refer to page 34.	[T_{S1}] 6,370 (Nm) ≥ [T_1] 1,541.4 (Nm) [T_3] 1,368.6 (Nm) According to the above conditions, the tentatively selected model should be no problem.
(4) Verify the output speed.		
N_{m0} Average speed per cycle (rpm)	$N_{m0}=\frac{t_1\times N_1+t_2\times N_2+t_3\times N_3}{t_4}$	$N_{m0}=\frac{0.5\times7.5+1.5\times15+0.5\times7.5}{20}$ = 1.5 (rpm)
Verification of output speed	Check the following condition: The allowable output speed [N_{S0}]*1 is equal to or greater than the average speed per cycle [N_{m0}] If the tentatively selected reduction gear is outside of the specifications, change the reduction gear model. Contact us regarding use of the model at a speed outside the allowable output speed [N_{S0}]*1. Note: The value of [N_{S0}] is the speed at which the case temperature is balanced at 60ºC for 30 minutes. *1 [N_{S0}] and [N_{S1}]: Refer to the rating table on page 13.	[N_{s0}] 21.5 (rpm) ≥ [N_{m0}] 1.5 (rpm) According to the above condition, the tentatively selected model should be no problem.

Reduction gear selection method (1) Calculate the required torque based on the load conditions and required life and select a reduction gear.

Setting/verification item	Calculation formula	Selection examples (With horizontal rotational transfer)
(5) Verify the shock torque at the time of an emergency stop.		
P_{em} Expected number of emergency stop times (times)	Based on the operation conditions.	For example, an emergency stop occurs once a month. [P_{em}] = 1 x 12 x required life (year) [L_{ex}] = 12×20=240 (times)
T_{em} Shock torque due to an emergency stop (Nm)	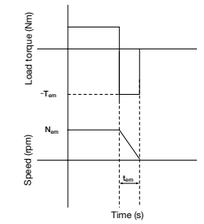	For example, [T_{em}] = 5,000 (Nm)
N_{em} Speed at the time of an emergency stop (rpm)		For example, [N_{em}] = 15 (rpm)
t_{em} Deceleration time at the time of an emergency stop (s)	Set the operation conditions that meet the following requirement: Shock torque due to an emergency stop [T_{em}] is equal to or less than the momentary maximum allowable torque [T_{S2}]	For example, [t_{em}] = 0.05 (s)
Z_4 Number of pins for reduction gear	Model / Number of pins (Z_4) RS-50A/RS-50B: 52 RS-260A/RS-260B: 60 RS-320A/RS-320B: 60 RS-400A: 60 RS-900A: 58	Number of pins for RS-260A: 60
C_{em} Allowable number of shock torque application times	$C_{em}=\frac{775\times\left(\frac{T_{S2}}{T_{em}}\right)^{\frac{10}{3}}}{Z_4\times\frac{N_{em}}{60}\times t_{em}}$ Note [T_{S2}]: Momentary maximum allowable torque, refer to the rating table on page 13.	$C_{em}=\frac{775\times\left(\frac{12{,}740}{5{,}000}\right)^{\frac{10}{3}}}{60\times\frac{15}{60}\times0.05}$ = 23,347 (times)
Verification of shock torque due to an emergency stop	Check the following condition: The allowable shock torque application count [C_{em}] is equal to or greater than the expected emergency stop count [P_{em}] If the tentatively selected reduction gear is outside of the specifications, change the reduction gear model.	[C_{em}] 23,347 ≥ [P_{em}] 240 According to the above condition, the tentatively selected model should be no problem.
(6) Verify the thrust load and moment load.		
W_1 R adial load (N)	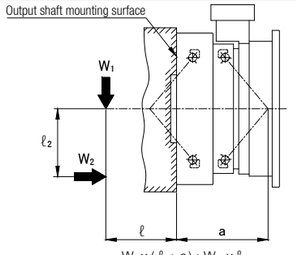	0 (N)
ℓ Distance to the point of radial load application (mm)		0 (mm)
W_2 Thrust load (N)		In this example, $W_2=W_A+W_B=(2{,}000+100\times4)\times9.8$ = 23,520 (N) Note W_A, W_B : Refer to page 32.
ℓ_2 Distance to the point of thrust load application (mm)		0 (mm) (As the workpiece center is located on the rotation axis)
M Moment load (Nm)	$M=\frac{W_1\times(\ell+a)+W_2\times\ell_2}{1{,}000}$ a: Refer to the calculation of the tilt angle on page 42.	RS-260A As dimension a = 232.4 (mm): $M=\frac{0\times(0+232.4)+23{,}520\times0}{1{,}000}$ = 0 (Nm)
Verify the thrust load and moment load	Check that the thrust load and moment load are within the range in the allowable moment diagram on page 40. When radial load W_1 is applied within dimension b, use the reduction gear within the allowable radial load. Wr: Allowable radial load, see the rating table on page 13. If the tentatively selected reduction gear is outside of the specifications, change the reduction gear model.	For this example, Thrust load [W_2] = 23,520 (N) Moment load [M] = 0 (N) As the above values are within the range in the allowable moment diagram, the tentatively selected model should be no problem.
Select the reduction gear model that satisfies all the conditions of the above verification items. The actual reduction ratio is determined based on the motor speed, input torque, and inertia moment. Check with the motor manufacturer.		Based on the above verification result, RS-260A is selected.

Model code selection examples

Reduction gear selection method (2): Tentatively select a reduction gear model and evaluate the service life.

Setting/verification item	Calculation formula	Selection examples (With horizontal rotational transfer)
(1) Tentatively select a desired reduction gear model.		
Tentative selection of a reduction gear	Tentatively select a desired reduction gear model.	For example, tentatively select RS-260A.
(2) Verify the maximum torque for startup and stop.		
Verification of maximum torque for startup and stop	Check the following conditions: The allowable acceleration/deceleration torque [T_{S1}]*1 is equal to or greater than the maximum starting torque [T_1]*2 and maximum stopping torque [T_3]*2 If the tentatively selected reduction gear is outside of the specifications, change the reduction gear model. *1 [T_{S1}]: Refer to the rating table on page 13. *2 [T_1] and [T_3]: Refer to page 34.	[T_{S1}] 6,370 (Nm) ≥ [T_1] 1,541.4 (Nm) [T_3] 1,368.6 (Nm) According to the above conditions, the tentatively selected model should be no problem.
(3) Verify the output speed.		
N_{m0} ——— Average speed per cycle (rpm)	$N_{m0} = \frac{t_1 \times N_1 + t_2 \times N_2 + t_3 \times N_3}{t_4}$	$N_{m0} = \frac{0.5 \times 7.5 + 1.5 \times 15 + 0.5 \times 7.5}{20}$ $= 1.5$ (rpm)
Verification of output speed	Check the following condition: The allowable output speed [N_{S0}]*1 is equal to or greater than the average speed per cycle [N_{m0}] If the tentatively selected reduction gear is outside of the specifications, change the reduction gear model. Contact us regarding use of the model at a speed outside the allowable output speed [N_{S0}]*1. Note: The value of [N_{S0}] is the speed at which the case temperature is balanced at 60ºC for 30 minutes. *1 [N_{S0}] and [N_{S1}]: Refer to the rating table on page 13.	[N_{S0}] 21.5 (rpm) ≥ [N_{m0}] 1.5 (rpm) According to the above condition, the tentatively selected model should be no problem.
(4) Verify the shock torque at the time of an emergency stop.		
P_{em} ——— Expected number of emergency stop times (times)	Based on the operation conditions.	For example, an emergency stop occurs once a month. [P_{em}] = 1 x 12 x required life (year) [L_{ex}] = 12×20=240 (times)
T_{em} ——— Shock torque due to an emergency stop (Nm)	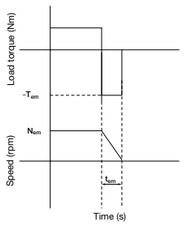	For example, [T_{em}] = 500 (Nm)
N_{em} ——— Speed at the time of an emergency stop (rpm)		For example, [N_{em}] = 15 (rpm)
t_{em} ——— Deceleration time at the time of an emergency stop (s)	Set the operation conditions that meet the following requirement: Shock torque due to an emergency stop [T_{em}] is equal to or less than the momentary maximum allowable torque [T_{S2}]	For example, [t_{em}] = 0.05 (s)
Z_4 ——— Number of pins for reduction gear	Model / Number of pins (Z_4) RS-50A/RS-50B: 52 RS-260A/RS-260B: 60 RS-320A/RS-320B: 60 RS-400A: 60 RS-900A: 58	Number of pins for RS-260A: 60
C_{em} ——— Allowable number of shock torque application times	$C_{em} = \frac{775 \times \left(\frac{T_{S2}}{T_{em}}\right)^{\frac{10}{3}}}{Z_4 \times \frac{N_{em}}{60} \times t_{em}}$ Note [T_{S2}]: Momentary maximum allowable torque, refer to the rating table on page 13.	$C_{em} = \frac{775 \times \left(\frac{1,225}{500}\right)^{\frac{10}{3}}}{40 \times \frac{15}{60} \times 0.05} = 30,729$ (times)
Verification of shock torque due to an emergency stop	Check the following condition: The allowable shock torque application count [C_{em}] is equal to or greater than the expected emergency stop count [P_{em}] If the tentatively selected reduction gear is outside of the specifications, change the reduction gear model.	[C_{em}] 23,347 ≥ [P_{em}] 240 According to the above condition, the tentatively selected model should be no problem.

Reduction gear selection method (2): Tentatively select a reduction gear model and evaluate the service life.

Setting/verification item	Calculation formula	Selection examples (With horizontal rotational transfer)
(5) Verify the thrust load and moment load.		
W_1 ——— Radial load (N)	Output shaft mounting surface 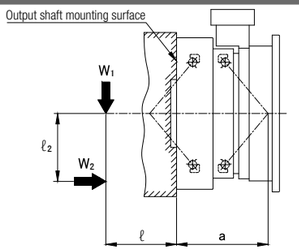 $M = \frac{W_1 \times (\ell + a) + W_2 \times \ell_2}{1,000}$ a: Refer to the calculation of the tilt angle on page 42.	0 (N)
ℓ ——— Distance to the point of radial load application (mm)		0 (mm)
W_2 ——— Thrust load (N)		$W_2 = W_A + W_B = (2,000 + 100 \times 4) \times 9.8$ $= 23,520$ (N) Note W_A, W_B: Refer to page 32.
ℓ_2 ——— Distance to the point of thrust load application (mm)		0 (mm) (As the workpiece center is located on the rotation axis)
M ——— Moment load (Nm)		RS-260A As dimension a = 232.4 (mm): $M = \frac{0 \times (0 + 232.4) + 23,520 \times 0}{1,000}$ $= 0$ (Nm)
Verify the thrust load and moment load	Check that the thrust load and moment load are within the range in the allowable moment diagram on page 40. When radial load W_1 is applied within dimension b, use the reduction gear within the allowable radial load. Wr: Allowable radial load, see the rating table on page 13. If the tentatively selected reduction gear is outside of the specifications, change the reduction gear model.	For this example, Thrust load [W_2] = 2,548 (N) Moment load [M] = 0 (N) As the above values are within the range in the allowable moment diagram, the tentatively selected model should be no problem.
(6) Verify the reduction gear service life.		
L_h ——— Life (h)	$L_h = 6,000 \times \frac{N_0}{N_m} \times \left(\frac{T_0}{T_m}\right)^{\frac{10}{3}}$	$L_h = 6,000 \times \frac{15}{12} \times \left(\frac{2,548}{963.9}\right)^{\frac{10}{3}}$ $= 191,552$(h)
Q_{1cy} ——— Number of cycles per day (times)	$Q_{1cy} = \frac{Q_1 \times 60 \times 60}{t_4}$	$Q_{1cy} = \frac{12 \times 60 \times 60}{20} = 2,160$ (times)
Q_3 ——— Operating hours per day (h)	$Q_3 = \frac{Q_{1cy} \times (t_1 + t_2 + t_3)}{60 \times 60}$	$Q_3 = \frac{2,160 \times (0.5 + 1.5 + 0.5)}{60 \times 60} = 1.5$ (h)
Q_4 ——— Operating hours per year (h)	$Q_4 = Q_3 \times Q_2$	$Q_4 = 1.5 \times 365 = 548$ (h)
L_{year} ——— Reduction gear service life (year)	$L_{year} = \frac{L_h}{Q_4}$	$L_{year} = \frac{191,552}{548} = 349.5$ (year)
L_{ex} ——— Required life (year)	Based on the operation conditions	20 years
Verification of the service life	Check the following condition: [L_{ex}] is equal to or less than [L_{year}] If the tentatively selected reduction gear is outside of the specifications, change the reduction gear model.	[L_{ex}] 20 (year) ≤ [L_{year}] 349.5 (year) According to the above condition, the tentatively selected model should be no problem.
Select the reduction gear model that satisfies all the conditions of the above verification items. The actual reduction ratio is determined based on the motor speed, input torque,and inertia moment. Check with the motor manufacturer.		Based on the above verification result, RS-260A is selected.

Limitation on the motor torque

A limitation is imposed on the motor torque value so that the shock torque applied to the reduction gear does not exceed the momentary maximum allowable torque.

Setting/verification item	Calculation formula	Selection examples (With horizontal rotational transfer)
T_{M1} —— Motor momentary maximum torque (Nm)	Determine based on the motor specifications.	For example, T_{M1} = 90 (Nm)
T_{M1OUT} —— Maximum torque generated at the output shaft for the reduction gear (Nm) (When an external shock is applied at the time of an emergency stop or motor stop)	$T_{M1out} = T_{M1} \times R \times \frac{100}{\eta}$ R: Actual reduction ratio η : Startup efficiency (%) ,refer to the rating table on page 13.	For example, calculate the maximum torque generated at the output shaft for the reduction gear based on the specifications when RS-260A-120 was selected. $T_{M1out} = 90 \times 120 \times \frac{100}{75}$ = 14,400 (Nm)
T_{M2OUT} —— Maximum torque generated at the output shaft for the reduction gear (Nm) (When a shock is applied to the output shaft due to hitting by an obstacle)	$T_{M2out} = T_{M1} \times R \times \frac{\eta}{100}$	$T_{M2out} = 10 \times 120 \times \frac{75}{100}$ = 8,100 (Nm)
Limitation on motor torque value	Check the following condition: The momentary maximum allowable torque [T_{S2}]*1 is equal to or greater than the maximum torque generated at the output shaft for the reduction gear [T_{M1OUT}] and [T_{M2OUT}] If the above condition is not satisfied, a limitation is imposed on the maximum torque value of the motor. *1 [T_{S2}]: Refer to the rating table on page 13.	[T_{S2}] 12,740 (Nm) ≤ [T_{M1OUT}] 14,400 (Nm) and [T_{M2OUT}] 8,100 (Nm) According to the above condition, the torque limit is set for the motor.

RS-50A
RS-50B

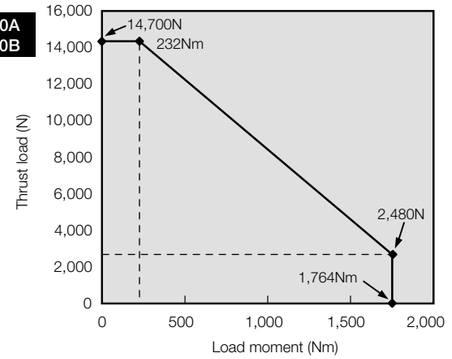

RS-260A
RS-260B

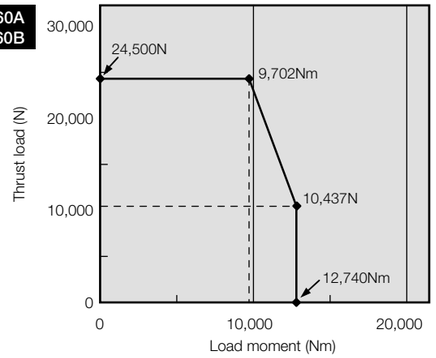

RS-400A

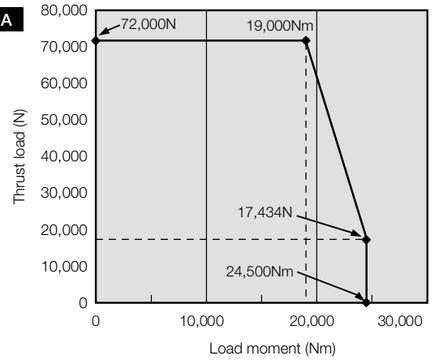

RS-320A
RS-320B

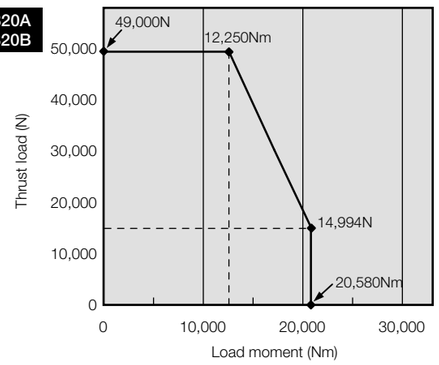

RS-900A

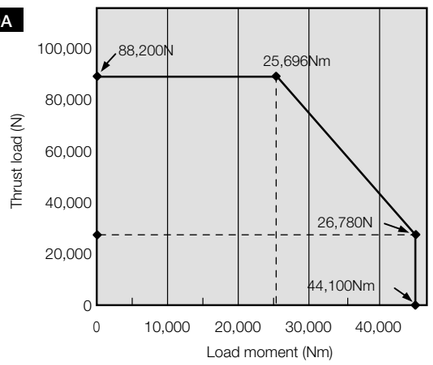

When the load moment and the axial load are applied concurrently, ensure that the reduction gear is used within the corresponding allowable moment range, which is indicated in the allowable moment diagram.

No-load running torque

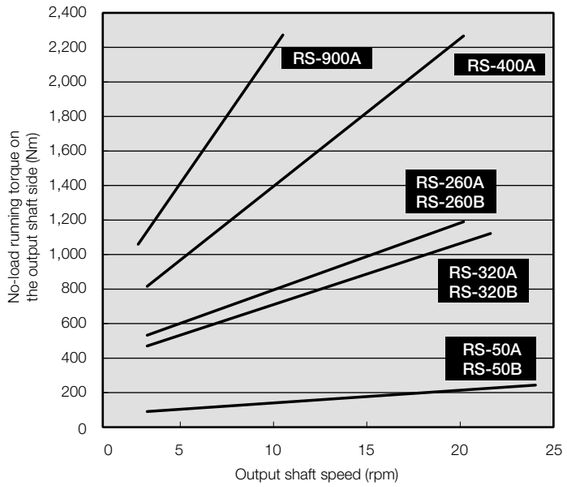

The no-load running torque that is converted to the input shaft side value should be calculated using the following equation:

$$\text{No-load running torque on the input shaft side (Nm)} = \frac{\text{No-load running torque on the output shaft side (Nm)}}{\text{Speed ratio}}$$

(Measurement conditions)
Case temperature: 20°C
Lubricant:
RVGREASE™ LB00
(RS-50A, RS-50B, RS-260A, RS-260B, RS-400A)
Molywhite RE00
(RS-320A, RS-320B, RS-900A)

Calculation of tilt angle and torsion angle

Calculation of tilt angle

When a load moment occurs with an external load applied, the output shaft will tilt in proportion to the load moment (If ℓ_3 is larger than b)
The moment rigidity indicates the rigidity of the main bearing, and it is represented by the load moment value required for tilting the main bearing by 1 arc.min.

$$\theta = \frac{W_1\ell_1 + W_2\ell_2}{M_1 \times 10^3}$$

θ : Tilt angle of the output shaft (arc.min.)
M_1 : Moment rigidity (Nm/arc.min.)
W_1, W_2 : Load (N)
ℓ_1, ℓ_2 : Distance to the point of load application (mm)
ℓ_1 : $\ell + \frac{b}{2} + a - b$
ℓ : Distance from the output shaft installation surface to the point of load application (mm)

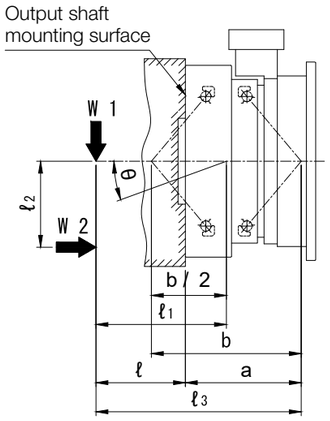

Model	Moment rigidity Reference value (Nm/arc.min.)	Dimensions (mm)	
		a	b
RS-50A	1,960	28.4	187.1
RS-50B		50.4	
RS-260A	8,320	232.4	319.3
RS-260B			
RS-320A	12,740	268.5	376.4
RS-320B		168.5	
RS-400A	19,600	264.2	369.8
RS-900A	37,730	325.4	433.4

Calculation of torsion angle

Calculate the torsion angle when the torque is applied in a single direction, using an example of RS-260A.

1) When the load torque is 50 Nm.....Torsion angle (ST_1)
When the load torque is within the lost motion range

$$ST_1 = \frac{\text{Load torque}}{\text{3\% of reduction gear rated torque}} \times \frac{\text{Lost motion}}{2} = \frac{50}{76.4} \times \frac{1\ (\text{arc.min.})}{2} = 0.33\text{arc.min. or less}$$

2) When the load torque is 1,300 Nm.....Torsion angle (ST_2)
When the load torque is within the rated torque range

$$ST_2 = \frac{\text{Lost motion}}{2} + \frac{\text{Load torque-3\% of reduction gear rated torque}}{\text{Spring constant}} = \frac{1}{2} + \frac{2{,}100-76.4}{1{,}540} = 1.81\text{arc.min.}$$

Note: 1. The torsion angles that are calculated above are for a single reduction gear.
2. Contact us for the customized specifications for lost motion.

Model	Torsional rigidity Reference value (Nm/arc.min.)	Lost motion		Backlash (arc.min.)
		Lost motion (arc.min.)	Measured torque (Nm)	
RS-50A	255	1.5	±14.7	1.5
RS-50B				
RS-260A	1,540	1.0	±76.4	1.0
RS-260B				
RS-320A	1,570		±94.1	
RS-320B				
RS-400A	2,450		±117.6	
RS-900A	4,900		±264.6	

Installation of the reduction gear and mounting it to the output shaft

When installing the reduction gear and mounting it to the output shaft, use hexagon socket head cap screws and tighten to the torque, as specified below, in order to satisfy the momentary maximum allowable torque, which is noted in the rating table.
The use of the serrated lock washers are recommended to prevent the hexagon socket head cap screws from loosening and to protect the seat surface from flaws.

• Hexagon socket head cap screw

<Bolt tightening torque and tightening force>

Hexagon socket head cap screw nominal size x pitch (mm)	Tightening torque (Nm)	Tightening force F (N)	Bolt specification
M5 × 0.8	9.01 ± 0.49	9,310	Hexagon socket head cap screw JIS B 1176: 2006 Strength class JIS B 1051: 2000 12.9 Thread JIS B 0209: 2001 6g
M6 × 1.0	15.6 ± 0.78	13,180	
M8 × 1.25	37.2 ± 1.86	23,960	
M10 × 1.5	73.5 ± 3.43	38,080	
M12 × 1.75	129 ± 6.37	55,100	
M16 × 2.0	319 ± 15.9	103,410	
M18 × 2.5	441 ± 22.0	126,720	
M20 × 2.5	493 ± 24.6	132,170	

Note: 1. The tightening torque values listed are for steel or cast iron material.
2. If softer material, such as aluminum or stainless, is used, limit the tightening torque. Also take the transmission torque and load moment into due consideration.

<Calculation of allowable transmission torque of bolts>

$$T = F \times \mu \times \frac{D}{2 \times 1{,}000} \times n$$

T	Allowable transmission torque by tightening bolt (Nm)
F	Bolt tightening force (N)
D	Bolt mounting P.C.D. (mm)
μ	Friction factor μ=0.15: When lubricant remains on the mating face. μ=0.20: When lubricant is removed from the mating face.
n	Number of bolts (pcs.)

• Serrated lock washer for hexagon socket head cap screw

Name: Belleville spring washer (made by Heiwa Hatsujyo Industry Co., Ltd.)
Corporation symbol: CDW-H
CDW-L (Only for M5)
Material: S50C to S70C
Hardness: HRC40 to 48

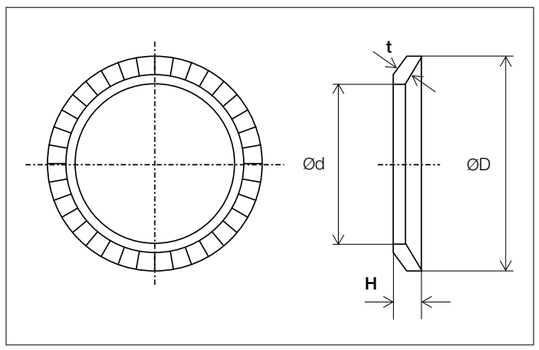

(Unit: mm)

Nominal size	ID and OD of Belleville spring washer		t	H
	Ød	ØD		
5	5.25	8.5	0.6	0.85
6	6.4	10	1.0	1.25
8	8.4	13	1.2	1.55
10	10.6	16	1.5	1.9
12	12.6	18	1.8	2.2
16	16.9	24	2.3	2.8
18	18.9	27	2.6	3.15
20	20.9	30	2.8	3.55

Note: When using any equivalent washer, select it with special care given to its outside diameter D.

Lubrication

- The standard lubrication method for the RS reduction gears is greasing.
  Before the reduction gear is shipped, it is filled with our recommended grease. (For the brand of the pre-filled grease, refer to the following table.)
  When operating a reduction gear filled with the appropriate amount of grease, the standard replacement time due to deterioration of the grease is 20,000 hours.
  When using the gear with deteriorated grease or under an inappropriate ambient temperature condition (40ºC or more), check the deterioration condition of the grease and determine the appropriate replacement cycle.
- Specified grease name

Model	RS-50A/B RS-260A/B RS-320A/B RS-400A RS-900A	RS-50A/B RS-260A/B RS-320A/B RS-400A RS-900A	RS-50A/B RS-260A/B RS-320A/B RS-400A RS-900A
Lubricant code	SB	LB	MW
Brand	RVOIL™ SB150	RVGREASE™ LB00	Molywhite RE00
Manufacturer	Nabtesco Corporation		
Ambient temperature	-10 to 40°C		

- It is recommended that the running-in operation is performed.
  Abnormal noise or torque variation may occur during operation due to the characteristics of the lubricant. There is no problem with the quality when the symptom disappears after the running-in operation is performed.

Requirements for equipment design

- If the lubricant leaks from the reduction gear or if the motor fails, the reduction gear must be removed. Design the equipment while taking this into consideration.
- As the center pipe at the center of the reduction unit is not designed to support a load, do not use the reduction gear in a way that applies a load to the center pipe. The oil seals may be deformed, which could eventually cause leakage of the lubricant.

Attention for lifting reduction gear

- Be sure that no load is applied to the center pipe or spline hole on the input unit when lifting. The oil seals on the output and/or input sides may become deformed, which could eventually cause leakage of the lubricant.

Reduction gear installation

- For the horizontal shaft installation, do not install the reduction gear while the input shaft (motor) position faces upward. (Be sure to confirm that the input shaft position faces right, left, or downward during installation.)
- If you intend to use the reduction gear attached to the ceiling, contact our customer representative.

Correct installation example

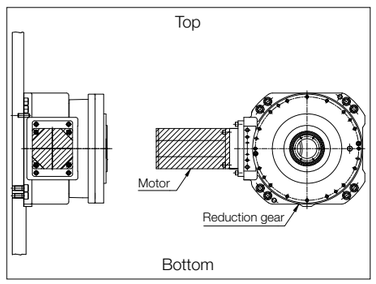

Incorrect installation example

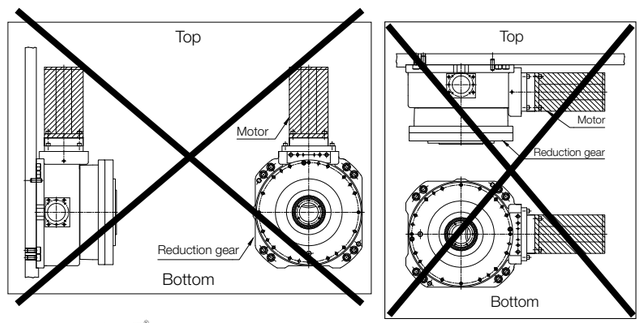

Inertia moment calculation formula

Shape	I(kgm²)
1. Cylinder solid 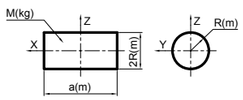	$I_x = \frac{1}{2} M R^2$ $I_y = \frac{1}{4} M \left(R^2 + \frac{a^2}{3} \right)$ $I_z = I_y$
2. Cylinder hollow 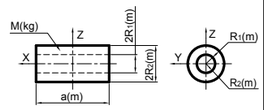	$I_x = \frac{1}{2} M \left(R_1^2 + R_2^2 \right)$ $I_y = \frac{1}{4} M \left\{ \left(R_i^2 + R_2^2 \right) + \frac{a^2}{3} \right\}$ $I_z = I_y$
3. Oval cross section 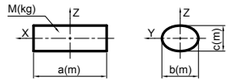	$I_x = \frac{1}{16} M \left(b^2 + c^2 \right)$ $I_y = \frac{1}{4} M \left(\frac{c^2}{4} + \frac{a^2}{3} \right)$ $I_z = \frac{1}{4} M \left(\frac{b^2}{4} + \frac{a^2}{3} \right)$
4. Rectangle 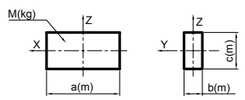	$I_x = \frac{1}{12} M \left(b^2 + c^2 \right)$ $I_y = \frac{1}{12} M \left(a^2 + c^2 \right)$ $I_z = \frac{1}{12} M \left(a^2 + b^2 \right)$
5. General application 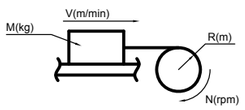	$I = \frac{M}{4} \left(\frac{V}{\pi \times N} \right)^2 = MR^2$

Shape	I(kgm²)
6. Horizontal movement by conveyor 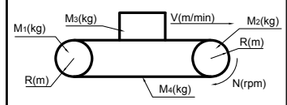	$I = \left(\frac{M_1 + M_2}{2} + M_3 + M_4 \right) \times R^2$
7. Horizontal movement by lead screw 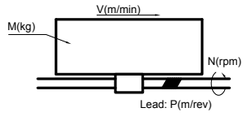	$I = \frac{M}{4} \left(\frac{V}{\pi \times N} \right)^2 = \frac{M}{4} \left(\frac{P}{\pi} \right)^2$
8. Up/down movement by hoist 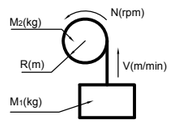	$I = M_1 R^2 + \frac{1}{2} M_2 R^2$
9. Parallel axis theorem 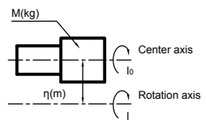	$I = I_0 + M\eta^2$ I_0 : Moment of inertia of any object about an axis through its center of mass I : Moment of inertia about any axis parallel to the axis through its center of mass η : Perpendicular distance between the above two axes

Troubleshooting checksheet

Check the following items in the case of trouble like abnormal noise, vibration, or malfunctions.
When it is not possible to resolve an abnormality even after verifying the corresponding checkpoint, obtain a “Reduction Gear Investigation Request Sheet” from the download page in our Website, fill in the necessary information, and contact our Customer Support Center at Tsu Plant.

[URL]: **https://precision.nabtesco.com/en/download/**

The trouble started immediately after installation of the reduction gear

Checked	Checkpoint
	Make sure the equipment’s drive section (the motor side or the reduction gear output surface side) is not interfering with another component.
	Make sure the equipment is not under a greater than expected load (torque, moment load, thrust load).
	Make sure the required number of bolts are tightened uniformly with the specified tightening torque.
	Make sure the reduction gear, motor, or your company’s components are not installed at a slant.
	Make sure the specified amount of Nabtesco-specified lubricant has been added.
	Make sure there are no problems with the motor’s parameter settings.
	Make sure there are no components resonating in unity.
	Make sure the input gear is appropriately installed on the motor.
	Make sure there is no damage to the surface of the input gear teeth.
	Make sure the input gear specifications (precision, number of teeth, module, shift coefficient, dimensions of each part) are correct.
	Make sure the flange and other components are designed and manufactured with the correct tolerances.

The trouble started during operation

Checked	Checkpoint
	Make sure the equipment has not been in operation longer than the calculated service life.
	Make sure the surface temperature of the reduction gear is not higher than normal during operation.
	Make sure the operation conditions have not been changed.
	Make sure there are no loose or missing bolts.
	Make sure the equipment is not under a greater than expected load (torque, moment load, thrust load).
	Make sure the equipment’s drive section is not interfering with another component.
	Make sure an oil leak is not causing a drop in the amount of lubricant.
	Make sure there are no external contaminants in the gear, such as moisture or metal powder.
	Make sure no lubricant other than that specified is being used.

Introduction of Our Website

Precision Reduction Gear RV™ Promotion Site

https://precision.nabtesco.com/en/

From a computer, please search us by company name.

Nabtesco Precision Equipment Company



Contents *Other contents are also available.

Various downloadable materials Members Only

Product catalogs, operation manuals, and 2D/3D CAD data are available for download.

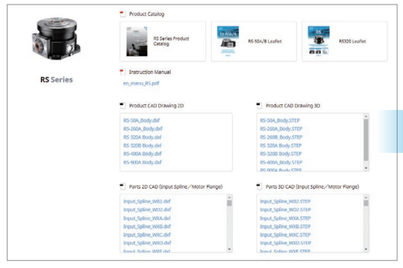



Product catalogs

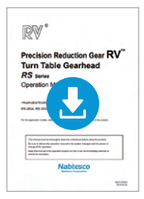

operation manuals

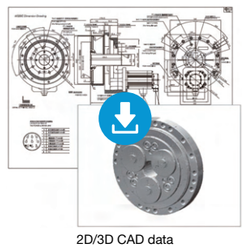

2D/3D CAD data

Application Video

Videos showing the mechanism and the operating principle of the precision reduction gear RV™, and application examples of products are now available.



Scan the QR code to view the YouTube channel of Precision Equipment Company.

Support Site

We deliver various materials such as a basic knowledge of reduction gears, the history of the precision reduction gear RV™, and example applications of each product.

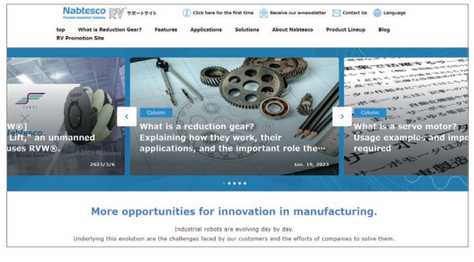

Nabtesco Precision Reduction Gear Support Site

Product Selection Members Only

(Simple selection/detailed selection/detailed selection of positioner units/simple selection of robot travel shafts)

When selecting models and calculating service life, mechanisms, applications, load conditions, and more can be taken into account.
The results can be downloaded as a reference calculation file and viewed from MyPage at any time.

<Examples of how to use selection tool (detailed selection)>

1 Mechanism



2 Application

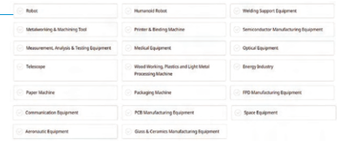

3 Gearbox type



4 Input load conditions

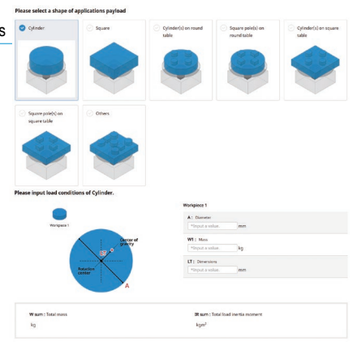

5 Input cycle conditions

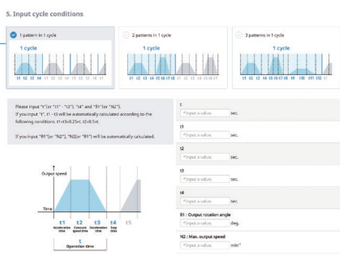

6 Model

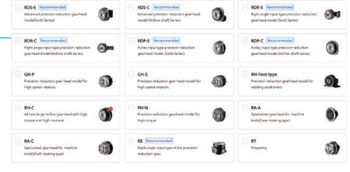

7 Calculated result

- PDF output is possible
- Usable with inquiries as well
- Viewable from MyPage at any time



Reference calculation file



MEMO

Warranty

1. In the case where Nabtesco confirms that a defect of the Product was caused due to Nabtesco's design or manufacture within the Warranty Period of the Product, Nabtesco shall repair or replace such defective Product at its cost. The Warranty Period shall be from the delivery of the Product by Nabtesco or its distributor to you (“Customer”) until the end of one (1) year thereafter, or the end of two thousand (2,000) hours from the initial operation of Customer's equipment incorporating the Product at end user's production line, whichever comes earlier.
2. Unless otherwise expressly agreed between the parties in writing, the warranty obligations for the Product shall be limited to the repair or replacement set forth herein. OTHER THAN AS PROVIDED HEREIN, THERE ARE NO WARRATIES ON THE PRODUCT, EXPRESS OR IMPLIED, INCLUDING WITHOUT LIMITATION ANY IMPLIED WARRANTY OF MERCHANTABILITY OR FITNESS FOR A PARTICULAR PURPOSE.
3. The warranty obligation under the Section 1 above shall not apply if:
   a) the defect was caused due to the use of the Product deviated from the Specifications or the working conditions provided by Nabtesco;
   b) the defect was caused due to exposure to foreign substances or contamination (dirt, sand etc.)
   c) lubricant or spare part other than the ones recommended by Nabtesco was used in the Product;
   d) the Product was used in an unusual environment (such as high temperature, high humidity, a lot of dust, corrosive/volatile/inflammable gas, pressurized/depressurized air, under water/liquid or others except for those expressly stated in the Specifications);
   e) the Product was disassembled, re-assembled, repaired or modified by anyone other than Nabtesco;
   f) the defect was caused due to the equipment into which the Product was installed;
   g) the defect was caused due to an accident such as fire, earthquake, lightning, flood or others; or
   h) the defect was due to any cause other than the design or manufacturing of the Product.
4. The warranty period for the repaired/replaced Product/part under the Section 1 above shall be the rest of the initial Warranty Period of the defective Product subjected to such repair/replace.

Please contact us for more details.

Rev. 007

Nabtesco®

Nabtesco Corporation

Europe and Africa

Nabtesco Precision Europe GmbH
Tiefenbroicher Weg 15, 40472 Düsseldorf, Germany
TEL: +49-211-173790 FAX: +49-211-364677
E-MAIL: info@nabtesco.de www.nabtesco.de

North and South America

Nabtesco Motion Control Inc.
23976 Freeway Park Drive, Farmington Hills, MI 48335, USA
TEL: +1-248-553-3020 FAX: +1-248-553-3070
E-MAIL: engineering@nabtescoprecision.com www.nabtescoprecision.com

China

Shanghai Nabtesco Motion-equipment Co., Ltd.
Room 1706, No. 388 Fu Shan Road, Pudong New Area, Shanghai 200122, China
TEL: +86-21-3363-2200 FAX: +86-21-3363-2655
E-MAIL: info@nabtesco-motion.cn www.nabtesco-motion.cn

India

Nabtesco India Private Limited
Site No.485/9, 14th Cross, Peenya Industrial Area, 4th Phase, Bangalore -560 058 Karnataka India
TEL: +91-80-4123-4901 FAX: +91-80-4123-4903
E-MAIL: Nti_pn@nabtesco.co.in www.nabtesco.co.in

Asia and others

Nabtesco Corporation
Nagoya Sales Office
4th Fl, Frontier Meieki Bldg., 2-17 Meieki 5-chome, Nakamura-ku, Nagoya 450-0002, Japan
TEL:+81-52-582-2981 FAX:+81-52-582-2987

Customer Support Center
594 Icchoda, Katada-cho, Tsu, Mie 514-8533, Japan
TEL: +81-59-237-4672 FAX: +81-59-237-4697

E-MAIL: P_Information@nabtesco.com https://precision.nabtesco.com/ja/

- Nabtesco and RV are registered trademarks or trademarks of Nabtesco Corporation.
- Specifications are subject to change without notice.
- The PDF data of this catalog can be downloaded from the following website.
  https://precision.nabtesco.com/en/download/
  If any addition or modification is made to the published information, the PDF data may be updated before the printed catalog.
  Due to this, please note that some contents of the PDF data may be changed or revised from those in this catalog.
- Unauthorized reprinting, reproduction, copying, or translation of this catalog in whole or in part is strictly prohibited.
- © 2015 Nabtesco Corporation. All rights reserved.

JAB CM009 JQA-EM7212 ISO 9001 JQA-1190 JQA-OH0278 レジリエンス認証 事業継続および社会貢献 認証・登録番号 E0000053

CAT.200820 (Issued on June 17,2024)