Table of Contents

General Information

Think Safety.....E

Sensors

Product Selection Guide..... 2

Tolerances..... 8

Lab Services 10

Thermocouples 17
General Information.....18
General Applications Tube and Wire... WATLOW SELECT 26
Mineral Insulated (MI) ... WATLOW SELECT 45
EXACTSENSE®.....56
MICROCOIL™ 59
Radio Frequency.....61
TRUE SURFACE (TST) 63
Multipoints 65

Resistance Temperature Sensors 67
RTDs... WATLOW SELECT 68
ENVIROSEAL™ HD Sensors.....80

Accessories..... 82
Fittings 83
Thermowells.....87
Protection Tubes 92
Connectors 93
Connection Heads and Blocks.....100
Transmitters 102

SERV-RITE® Wire 112
General Information.....113
Thermocouple and Extension Wire.....114
RTD Lead Wire 145

Mineral Insulated Cable 148
XACTPAK® Cable 149

Controllers

Product Selection Guide 163

Output Comparison Guide 167

Temperature and Process 168

F4T® ... WATLOW SELECT 168
EZ-ZONE® RM... WATLOW SELECT 179
RMA PLUS™ Remote Access Module... WATLOW SELECT 197
EZ-ZONE RMZ/RMF 200
EZ-ZONE RMG 202
EZ-ZONE RMT 204
PM PLUS™ ... WATLOW SELECT 206
PM LEGACY™ 214
POWERGLIDE® 220
EZ-ZONE ST 222
SERIES EHG® SL10 229
SERIES EHG 233
SERIES CF 235
SERIES CV 238

Power Switching Devices 245

ASPYRE DT 245
DIN-A-MITE® A ... WATLOW SELECT 252
DIN-A-MITE B ... WATLOW SELECT 255
DIN-A-MITE C ... WATLOW SELECT 258
DIN-A-MITE D ... WATLOW SELECT 264
Solid State Relays (SSR) 267

Controllers (cont.)

Limits and Scanners 271

PM LEGACY 272

EZ-ZONE RM ... WATLOW SELECT 276

SERIES LF 282

SERIES LV 285

SERIES LS 288

Data Loggers 290

D4T™ 1/4 DIN ... WATLOW SELECT 290

RMA PLUS Remote Access Module ... WATLOW SELECT 295

Operator Interfaces and Indicators 298

Silver Series EM 298

EZ-ZONE RUI and Gateway 304

SERIES TM 308

Software 310

COMPOSER® 310

EZ-LINK™ Mobile App 312

ASPYRE Configurator 314

EZ-ZONE Configurator 315

EZ-ZONE LabVIEW™ Driver 317

EZ-ZONE GSD Editor 318

EHG SL10 Software 319

SpecView SCADA Software 320

EZ-warePLUS 325

Control Panels 327

WATCONNECT® 327

WATCONNECT C1 333

Controllers (cont.)

Accessories.....337
Communication Adapters.....337
Combined Branch Protection and Semiconductor Fusing.....339
Semiconductor Fuses.....341
Current Transformers.....342
Panel Mount Adapter Plates.....343
Power Supplies.....344

Industry 4.0 Products.....347
F4T ... WATLOW SELECT.....347
D4T 1/4 DIN ... WATLOW SELECT.....358
RMA PLUS Remote Access Module ... WATLOW SELECT.....363
EZ-LINK Mobile App.....366
EZ-ZONE RMG.....368
EZ-ZONE RMT.....370
POWERGLIDE.....372
Silver Series EM.....374

Index

Part Number Index.....G
Product Category Index.....L

Terms and Conditions of Sale

Terms and Conditions of Sale.....M

Think Safety

All thermal systems pose inherent hazards if applied incorrectly. Improper application and failure to adhere to recognized national, state and local electrical codes as well as agency standards can result in injury to personnel or damage to plant and process.

Users are responsible for determining controller or sensor-to-application compatibility. Care should always be exercised in controller or sensor selection, installation and use.

Responsibility for sensor and controller installation and wiring lie with the customer. Each sensor, power and temperature controller is packaged with its own user manual. Be sure to review and understand the manual, which will help maximize safety, thermal system performance, efficiency and product life.

All Watlow® temperature and power controllers and sensors should be installed by qualified personnel who are knowledgeable about the thermal system's characteristics and in accordance with the National Electrical Code and any applicable state or local codes.

Sensor Safety

If a sensor is used in a medical application, with life or death consequences, careful attention must be paid to its fit for the application with appropriate redundancies and/or alarms built into the product.

If the sensor is used in an industrial environment where hazards exist, protection methods (isolating sensors and wiring from explosive or flammable substances) should be considered to prevent failures or short circuits from becoming dangerous to personnel and property.

It is good engineering practice to always consider the consequences of a catastrophic failure and the affect it would have on personnel and property. Please institute the appropriate safeguards to limit any danger.

Controller Safety

The following recommendations apply to all Watlow temperature and power controllers as well as control panels:

- Carefully read, understand and follow the instructions contained in the user manual.
- Always disconnect electrical power prior to installing, servicing or replacing temperature or power controllers.
- All temperature and power controllers should be used with approved conductors of the correct wire gauge.
- Do not use solid state power controllers in safety limit controller circuits. Solid state components tend to fail in a closed circuit mode and will not cut off power.



- Safety limit control should be provided by an isolated, redundant sensor and agency-approved controller of the appropriate type, design and installation.
- Electrical enclosures and/or control panels housing temperature and power controllers should match the application's environment and be able to withstand worst-case failures especially in hazardous locations.
- Do not apply temperature or power controllers where ambient conditions exceed specified operating environments and/or exceed power draw permitted by the device or applicable rating curve.
- Pay special attention to wiring practices. Power, sensor and communications wiring should be handled appropriately to avoid inductive and capacitive coupling. These conditions can create errant and/or erratic operation and pose a safety hazard. Use noise suppression devices where appropriate. Make ground connections for any device only to the appropriate electrical ground for that device (chassis, safety or computer ground).

Designing Safe Thermal Systems

Most heated thermal systems include:

- A heat source, either fuel fired or electrical resistance
- A temperature controller
- A temperature sensor

The sensor produces a signal value based on the temperature to which it is exposed. The temperature controller interprets the signal into a value that is either above, below or at a then predetermined set point. The controller will then create an output signal to command a device to turn the heat source on or off.

As with any heated thermal system, failure in the sensor, temperature controller or heat-source controlling device could create an over- or under-temperature condition. These conditions can ruin product in process or pose a danger to personnel and property.

Limit controllers are used to prevent injury and property loss that could occur if a process variable's value were to cross outside the safe operating range for the system. In systems where temperature is controlled, a limit controller should be used to respond to an over- or under-temperature condition before it becomes a hazard. A properly applied limit controller senses when the temperature or other process variable is outside the limit and shuts the system down.

The limit controller must be independent of the primary control system and able to interrupt the flow of energy that could cause a hazard. For example, in a system where temperature is controlled with an electric heater, the limit controller must be able to disconnect the heater from the power source when the temperature exceeds the limit. A proper design requires user intervention to correct the cause of the failure before the system is restored to normal operation.

Usually, the sensor used in a limit control system does not need to be as accurate as the primary sensor. Its only function is to create a temperature signal that allows a controller to determine if a pre programmed over-or under-temperature condition exists. Sensor longevity and aging must be considered if the sensor will have an unacceptable impact on the limit control system's ability to accurately determine an over- or under-temperature condition.

As with enclosures, there are agency standards for the design and construction of limit control systems, and their suitability for use exist.

Designing Intrinsically Safe Circuits

When installing temperature sensors in hazardous areas, circuits should be made intrinsically safe with "barriers" to prevent sparks and excessive heat on the "safe" side from reaching the hazardous area and causing sparks.

All barrier device parameters affect sensor performance and the sensor circuit. Parameters include:

- Polarity rated for AC or DC signals
- Rated voltage or working voltage of the signal the device is designed to carry before it senses a fault
- Internal resistance, as the amount of resistance inherent to the barrier device, affects the strength of the current signal it is allowing to pass

Table of Contents

Product Selection Guide **2**

Tolerances **8**

Lab Services **10**

Thermocouples **17**
- General Information 18
- General Applications Tube and Wire... WATLOW SELECT 26
- Mineral Insulated (MI) ... WATLOW SELECT 45
- EXACTSENSE® 56
- MICROCOIL™ 59
- Radio Frequency 61
- TRUE SURFACE (TST) 63
- Multipoints 65

Resistance Temperature Sensors **67**
- RTDs... WATLOW SELECT 68
- ENVIROSEAL™ HD Sensors 80

Accessories **82**
- Fittings 83
- Thermowells 87
- Protection Tubes 92
- Connectors 93
- Connection Heads and Blocks 100
- Transmitters 102

SERV-RITE® Wire **112**
- General Information 113
- Thermocouple and Extension Wire 114
- RTD Lead Wire 145

Mineral Insulated Cable **148**
- XACTPAK® Cable 149

Sensors

Thermocouples

General Applications Tube and Wire	Style	Maximum Temperature*	
		°F	°C
Adjustable Spring  See page 28	10 and 11	900	480
Adjustable Armor  See page 29	12	900	480
Rigid Sheath 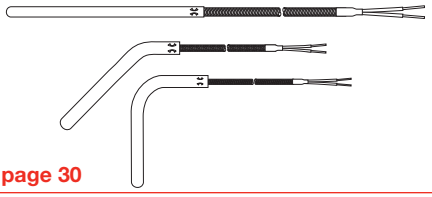 See page 30	20, 21 and 22	900	480
Rigid Sheath with Threaded Fitting  See page 31	23 and 24	900	480
Flange 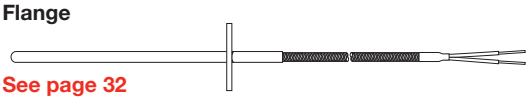 See page 32	25	900	480
Rigid Sheath  See page 33	30, 31 and 32	900	480
Large Diameter Rigid Sheath 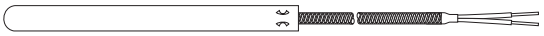 See page 34	40, 41 and 42	900	480
Flexible Extensions 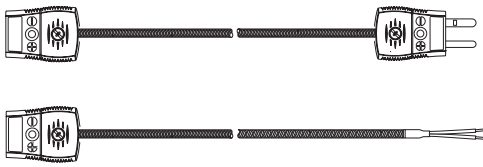 See page 35	60	900	480
Insulated Wire  See page 36	61 and 62	900	480
PFA Encapsulated  See page 37	65	900	480

***Note:** Maximum temperature of 900°F (482°C) is for fiberglass insulated wire only. PFA insulated wire is rated for 500°F (260°C).

Sensors

Thermocouples

General Applications Tube and Wire

Style	Maximum Temperature*	
	°F	°C
Ring Terminal  See page 38	70	900	480
Nozzle  See page 39	71	900	480
Pipe Clamp 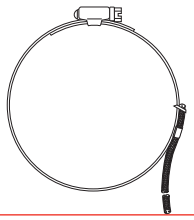 See page 40	72	900	480
Grommet  See page 41	73	900	480
Brass Shim  See page 42	74	500	260
Stainless Steel Shim  See page 43	75	900	480
Polyimide Bracket  See page 44	OK	400	200
Low Profile Polyimide Peel and Stick 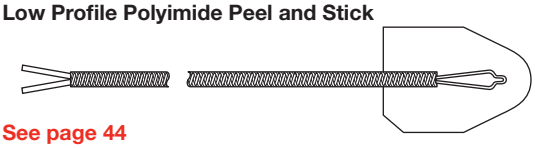 See page 44	OK	400	200

***Note:** Maximum temperature of 900°F (482°C) is for fiberglass insulated wire only. PFA insulated wire is rated for 500°F (260°C).

Sensors

Thermocouples

Mineral Insulated

	Style	Maximum Temperature*	
		°F	°C
Cut and Stripped 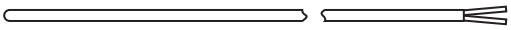 See page 49	AB	2200	1200
Mini Plug or Jack Termination  See page 50	AC	2200	1200
Standard Plug or Jack Termination  See page 51	AC	2200	1200
Metal Transitions with Spring Strain Relief 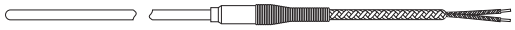 See page 52	AF	2200	1200
Miniature Transitions  See page 53	AQ	2200	1200
Connection Head  See page 54	AR	2200	1200
For Use With Thermowells 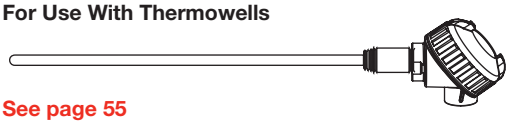 See page 55	AT	2200	1200

***Note:** Maximum temperature of 2200°F (1204°C) is for Inconel® only. SST sheath is rated for 1650°F (899°C).

Sensors

Thermocouples

EXACTSENSE®

	Style	Maximum Temperature*	
		°F	°C
Integrated Signal Conditioning 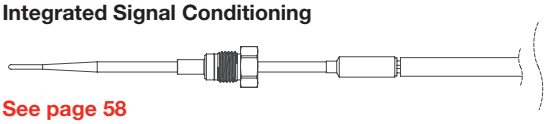 See page 58	EXACTSENSE	1832	1100

MICROCOIL™

	Style	Maximum Temperature*	
		°F	°C
Miniature Surface Probe  See page 60	MC	1292	700

Radio Frequency

	Style	Maximum Temperature*	
		°F	°C
Thermocouple Probe  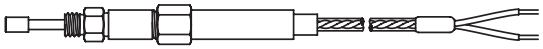 See page 62	TR	932	500

TRUE SURFACE

	Style	Maximum Temperature*	
		°F	°C
Insulated Surface Probe 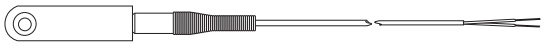 See page 64	TST	400	200

Multipoint

	Style	Maximum Temperature*	
		°F	°C
Multipoint 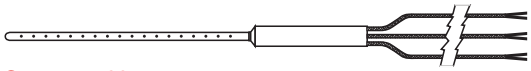 See page 66	AW	2200	1200

Sensors

Resistance Temperature Sensors

Resistance Temperature Detectors (RTDs)	Style	Maximum Temperature*	
		°F	°C
Standard Industrial Insulated Leads 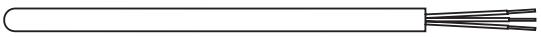 See page 72	RB	500	260
Plug or Jack Termination 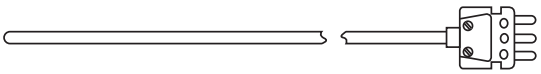 See page 73	RC	500	260
Metal Transitions  See page 74	RF	1200	650
Connection Head/Optional Transmitter 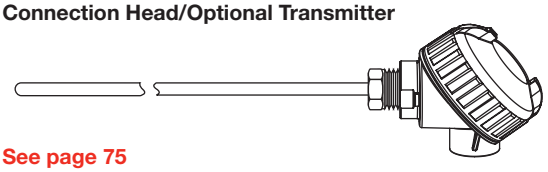 See page 75	RR	1200	650
For Use With Thermowells 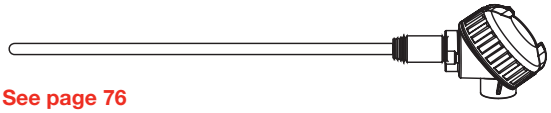 See page 76	RT	1200	650
For Use With Thermowells 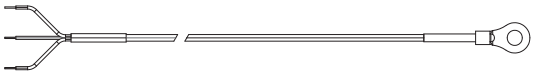 See page 76	RW	500	260
Adjustable Spring  See page 78	10 and 11	500	260

Sensors

Resistance Temperature Sensors

RTDs	Style	Maximum Temperature*	
		°F	°C
Adjustable Armor Style  See page 78	12	500	260
Cartridge with Flange 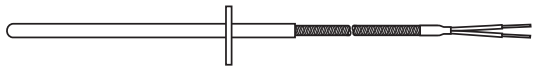 See page 78	25	500	260
Open Air  See page 78	50	500	260
Open Air with Flange 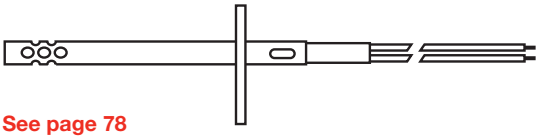 See page 78	55	500	260
Surface Mount 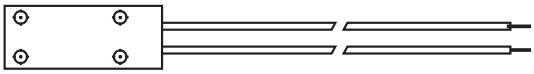 See page 78	80	500	260

Thermocouples

ANSI Tolerances

As of 1969, nomenclature of the American National Standards Institute, Inc. (ANSI) supersedes previously used International Society of Automation (ISA) designations. The standard and special tolerances in the table below come from ANSI Circular ASTM E230.

Standard and special tolerances stated below apply only to temperature ranges listed for each thermocouple type.

Letter Designations

ANSI Letter	T/C Leg	Popular Generic and Trade Names
B	BP BN	Platinum 30% Rhodium Platinum 6% Rhodium
E	EP EN	Chromel®, Tophel®, HAI-KP® Constantan, Cupron®, Advance®
J	JP JN	Iron Constantan, Cupron®, Advance®
K	KP KN	Chromel®, Tophel®, HAI-KP® Alumel®, Nail®, HAI-KN®
N	NP NN	Nicrosil Nisil
R	RP RN	Platinum 13% Rhodium Pure Platinum
S	SP SN	Platinum 10% Rhodium Pure Platinum
T	TP TN	Copper Constantan, Cupron, Advance

Sheath Tolerances

Length and diameter are important considerations for proper installation of temperature sensors. The tables below provide tolerances on these key dimensions of Watlow® catalog sensor products.

General Application and RTD Sheath Tolerances		
Sheath Diameter (in.)	**Diameter Tolerance (in.)**	**Length Tolerance (in.)**
/	± 0.003	± 0.125
/	± 0.003	± 0.125
/	± 0.003	± 0.125
/	± 0.003	± 0.250

Mineral Insulated (MI) Thermocouple Sheath Tolerances			
Diameter (in.)	**Diameter Tolerance (in.)**	**Length Tolerance (in.)**	
		up to 24 in.	**over 24 in.**
0.020	+ 0.001 - 0.0005	± 0.25	± 1%
0.032	+ 0.001 - 0.0005	± 0.25	± 1%
0.040	+ 0.001 - 0.0005	± 0.25	± 1%
0.063	+ 0.001 - 0.001	± 0.125	± ½%
0.125	+ 0.002 - 0.001	± 0.125	± ½%
0.188	+ 0.002 - 0.001	± 0.125	± ½%
0.250	+ 0.003 - 0.001	± 0.125	± ½%

Flexible Lead Tolerances

General Application, MI Thermocouple and RTD Lead Length	
Lead Length (in.)	**Tolerance (in.)**
Under 6	+ 1 - 0
6 to 24	+ 2 - 0
Over 24 to 120	+ 6 - 0
Over 120	+ 5% - 0

Note: Strip length tolerances ±1/8 inch.

Sheath Configuration

Standard shipping methods and element strength require that long length mineral insulated sensors be shipped in coil format. This chart provides the standard sheath configuration by diameter.

MI Thermocouple Standard Sheath Configuration

Sheath Diameter in.	Standard Length in.	Configuration
0.020	Up to 20	Straight
0.032	From 20 to 170 170 to 300 Greater than 300	3 in. coil 6 in coil 9 - 10 in. coil
0.040	Up to 20 From 20 to 120 120 to 200 Greater than 200	Straight 3 in. coil 6 in coil 9 - 10 in. coil
0.063	Up to 50 50 to 540 (45 feet) Greater than 540 (45 feet)	Straight 9 - 10 in. coil 24 in. coil
0.125 0.188 0.250	Up to 96 Greater than 96	Straight 24 in. coil

Metal Substitution

On standard catalog items, Watlow reserves the right to substitute superior materials of construction without notification. These can include, but are not limited to, superior metals and special limits of error wire.

Initial Accuracy of Temperature Sensors

Industry specifications establish the accuracy limits of industrial temperature sensors. These limits define initial sensor performance at the time of manufacture. Time, temperature and environmental operating conditions may cause sensors to change during use. Also, consider that overall system accuracy will depend on the instrument and other installation parameters.

Thermocouples — Tolerances on Initial Values of Electromotive Force vs. Temperature

Reference Junction 32°F (0°C)

Calibration Type	Temperature Range °F	Temperature Range (°C)	Tolerances (whichever is greater) Standard °F	Standard (°C)	Special °F	Special (°C)
Thermocouples ① ③						
B	1600 to 3100	(870 to 1700)		±0.5%		±0.25%
E	32 to 1600	(0 to 870)	②	(±1.7 or ±0.5%)	②	(±1.0 or ±0.4%)
J	32 to 1400	(0 to 760)	②	(±2.2 or ±0.75%)	②	(±1.1 or ±0.4%)
K or N	32 to 2300	(0 to 1260)	②	(±2.2 or ±0.75%)	②	(±1.1 or ±0.4%)
R or S	32 to 2700	(0 to 1480)	②	(±1.5 or ±0.25%)	②	(±0.6 or ±0.1%)
T	32 to 700	(0 to 370)	②	(±1.0 or ±0.75%)	②	(±0.5 or ±0.4%)
E[d]	-328 to 32	(-200 to 0)	②	(±1.7 or ±1%)	②	⑤
K[d]	-328 to 32	(-200 to 0)	②	(±2.2 or ±2%)	②	⑤
T[d]	-328 to 32	(-200 to 0)	②	(±1.0 or ±1.5%)	②	⑤
Extension Wires ⑥ ⑦						
EX	32 to 400	(0 to 200)	±3.0	(±1.7)	±1.8	(±1.0)
JX	32 to 400	(0 to 200)	±4.0	(±2.2)	±2.0	(±1.1)
KX or NX	32 to 400	(0 to 200)	±4.0	(±2.2)	±2.0	(±1.1)
TX	32 to 200	(0 to 100)	±1.8	(±1.0)	±0.9	(±0.5)
Compensating Extension Wires ⑧ ⑨						
RX, SX	32 to 400	(0 to 200)	±9.0	(±5.0)	*	*

① Tolerances in this table apply to new, essentially homogeneous thermocouple wire, normally in the size range 0.25 to 3 mm in diameter (No. 30 to No. 8 AWG) and used at temperatures not to exceed the recommended limits shown above. If used at higher temperatures, these tolerances may not apply.

② At a given temperature that is expressed in °C, the tolerance expressed in °F is 1.8 times larger than the tolerance expressed in °C. Note: Wherever applicable, percentage-based tolerances must be computed from temperatures that are expressed in °C.

③ **Caution**: Users should be aware that certain characteristics of thermocouple materials, including the EMF vs. temperature relationship, may change with time in use. Consequently, test results and performance obtained at the time of manufacture may not necessarily apply throughout an extended period of use. Tolerances provided above apply only to new wire as delivered to the user and do not allow for changes in characteristics with use. The magnitude of changes will depend on factors such as wire size, temperature, time of exposure and environment. Further noted that due to possible changes in homogeneity, attempting to recalibrate used thermocouples is likely to yield irrelevant results and is not recommended. However, it may be appropriate to compare used thermocouples in-situ with new or known good thermocouples to ascertain their suitability for further service under conditions of comparison.

④ Thermocouples and thermocouple materials are normally supplied to meet tolerances specified in the table for temperatures above 0°C. The same materials, however, may not fall within the tolerances given for temperatures below °C in the second section of the table. Materials required to meet tolerances stated for temperatures below 0°C must be stated in the purchase order. Selection of materials will usually be required.

⑤ Special tolerances for temperatures below 0°C are difficult to justify due to limited available information. However, the following values for Types E and T thermocouples are suggested as a guide for discussion between purchaser and supplier: Type E: -200 to 0°C ±1.0°C or ±0.5 percent (whichever is greater); Type T: -200 to 0°C ±0.5 or±0.8 percent (whichever is greater).

Initial values of tolerance for Type J thermocouples at temperatures below 0°C, and special tolerances for Type K thermocouples below 0°C, are not given due to characteristics of the materials.

⑥ Tolerances shown in the table represent the maximum error contribution allowable from new and essentially homogeneous thermocouple extension wire when exposed to the full temperature range shown above. Extension grade materials are not intended for use outside of the temperature range shown.

⑦ Thermocouple extension wire contributes to the total thermoelectric signal that depends on the temperature difference between the extreme ends of the extension wire length. The actual magnitude of any error introduced into a measuring circuit by homogeneous and correctly connected extension wires is equal to the algebraic difference of the deviations at its two end temperatures, as determined for that extension wire pair.

⑧ Tolerances in the table apply to new and essentially homogeneous thermocouple compensating extension wire when used at temperatures within the range shown above.

⑨ Thermocouple compensating extension wire contributes to the total thermoelectric signal that depends on the temperature difference between the extreme ends of the compensating extension wire length.

* Special tolerance grade compensating extension wires are not available.

Initial Accuracy of Temperature Sensors *(Continued)*

Generally, if accuracy is the most important concern and the application temperature is between 284°F and 1202°F (140°C and 650°C), RTDs are the best choice.

Three-wire is most common, but four-wire provides higher system accuracy.

Resistance Temperature Detectors—RTDs

Table of Tolerance Values

Temperature °C	Resistance Value Ω	Tolerance DIN-IEC.751	
		Class A °C (Ω)	Class B °C (Ω)
-200	18.52	±0.55 (±0.24)	±1.3 (±0.56)
-100	60.26	±0.35 (±0.14)	±0.8 (±0.32)
0	100.00	±0.15 (±0.06)	±0.3 (±0.12)
100	138.51	±0.35 (±0.13)	±0.8 (±0.30)
200	175.86	±0.55 (±0.20)	±1.3 (±0.48)
300	212.05	±0.75 (±0.27)	±1.8 (±0.64)
400	247.09	±0.95 (±0.33)	±2.3 (±0.79)
500	280.98	±1.15 (±0.38)	±2.8 (±0.93)
600	313.71	±1.35 (±0.43)	±3.3 (±1.06)
650	329.64	±1.45 (±0.46)	±3.6 (±1.13)

Where **t** is the actual temperature, in °C, of the platinum elements.

RTD Tolerance Class Definitions

DIN class A:±[0.15 + 0.002 |t|]°C

DIN class B:±[0.30 + 0.005 |t|]°C

Temperature Accuracy

Watlow® uses a verification process at selected temperature points to assure wire and XACTPAK® products conform to ASTM error limits. Samples are taken to the Watlow calibration laboratory and verified for accuracy with NIST traceable standards. Conformance to error limits is required at all test temperatures. The following charts provide the standard test temperatures by thermocouple type.

XACTPAK and Mineral Insulated (MI) Thermocouples

Calibration	Standard Calibration Points °F*
E	200, 600, 1000, 1600
J	200, 600, 1000, 1400
K	600, 1000, 1600, 2000
N	600, 1000, 1600, 2000
T	200, 400

SERV-RITE® Insulated Wire

Calibration	Standard Calibration Points °F*
E	300, 500, 1000, 1600
J	200, 500, 1000, 1400
K	300, 500, 1000, 1600, 2000
N	300, 500, 1000, 1600, 2000
T	200, 500
EX	200, 400
JX	200, 400
KX	200, 300, 400
NX	200, 300, 400
RX	400
SX	400
TX	200

* Calibration is not made when temperature exceeds the sheath rating.

Quality Certification Lab

Thermocouple Calibration

Watlow offers testing for application temperatures other than the standard points in a range from -100 to 2300°F (-74 to 1260°C), depending on material. Use outside of the temperature limits of ASTM E230 is not recommended.

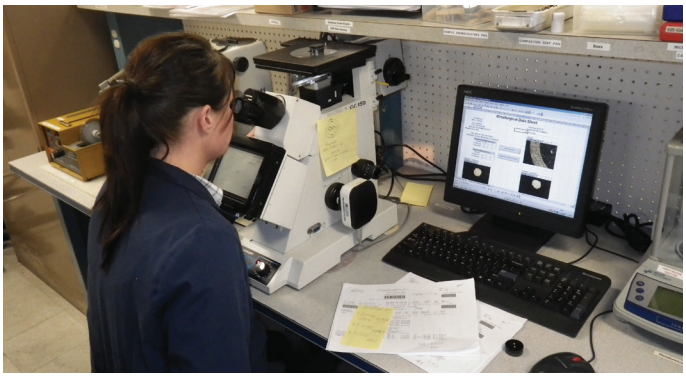

A lab service technician uses a metallurgical microscope to examine the microstructure of the metallic components in Watlow's mineral insulated metal sheathed cable, XACTPAK.

Thermocouple Calibration Table

Sensor Type	Temperature	Specifications
T Thermocouple	32 to 700°F (0 to 371°C)	ASTM E220/ASTM E230
J Thermocouple	32 to 1400°F (0 to 760°C)	ASTM E220/ASTM E230
E Thermocouple	32 to 1600°F (0 to 871°C)	ASTM E220/ASTM E230
K or N Thermocouple	32 to 2300°F (0 to 1260°C)	ASTM E220/ASTM E230
PT 385 100Ω RTD	-110 to 1200°F (-80 to 650°C)	ASTM E644

Notes:
• Thermocouple calibrations to ASTM E207 possible (contact factory).

Recommended Sensor Length for Calibration

Temperature	Minimum Length	Maximum Length
-100 to 500°F (-74 to 260°C)	6 in. (150 mm)	60 in. (1525 mm)
500 to 2000°F (260 to 1093°C)	18 in. (450 mm)	10 ft (3 m)
2000 to 2300°F (1093 to 1260°C)	20 in. (500 mm)	10 ft (3 m)

Notes: Longer sensors may be calibrated if they are in coil form.

Recommended RTD Length for Calibration

Temperature	Minimum Length	Maximum Length
-100 to 500°F (-74 to 260°C)	6 in. (150 mm)	60 in. (1525 mm)
500 to 1200°F (260 to 650°C)	18 in. (450 mm)	10 ft (3 m)

Quality Certification Lab *(Continued)*

Calibration and Certification

SERV-RITE® thermocouple wire, XACTPAK metal sheathed cable and individual temperature sensors can be calibrated and certified in Watlow's calibration laboratory for an extra charge. Each thermocouple, coil, reel or spool of wire is tagged to show the individual departure from curve. Once calibrated, exact departure from the standard curve at any specified temperature is known and considered. Thermocouples and wire samples sent to the factory for calibrating must be at least 36 inches in length.

Calibrating temperature points range from 32 to 2300°F (0 to 1260°C), depending on calibration, gauge size and insulation. Sub-zero and cryogenic calibration is available at temperatures down to -100°F (-74°C).

A certificate of calibration and a calibration results tag are furnished for all items calibrated.

Common Certifications

The following standard certifications are available from Watlow. Requirements for the following standard certifications available from Watlow must be stated on an order. Certificates #1, 2, 3 and 4 are only available as a "Certificate Package" comprised of all four certificates.

Certificate #1 - Certificate of Compliance/Conformity

This certification states that the product supplied meets the purchase order requirements.

Certificate #2 - Certificate of Compliance to ASTM E230 Tolerance

This certification states that the product being supplied meets the purchase order requirements, including the correct calibration type and tolerance. This certification is also used when conformance to ASTM E230 must be documented.

Certificate #3 - Certificate of Conformance to ISO 10012

This certificate certifies that Watlow's calibration system is in accordance with ISO 10012.

Certificate #4 - Certificate of Traceability to National Institute of Standards and Technology (NIST)

This certification certifies that the materials received are traceable to NIST via calibration data of the thermoelements used to manufacture the product.

Certificate #5 - Certificate of Calibration for Bulk XACTPAK

This calibration certificate provides overall lot calibration data for the bulk XACTPAK. The data will indicate how the final sensor will perform without the additional cost to calibrate each individual sensor.

Certificate #6 - Certificate of Calibration for Bulk SERV-RITE Insulated Wire

This calibration certification provides preproduction calibration values of the insulated wire product at standard calibration check points.

Certificate #7 - Chemical Composition of Conductors Used in Insulated Wire Products

Watlow tubing and insulator vendors supply certification on the chemical composition and physical characteristics of their products (material certification) with each lot received. When requested, certifications are duplicated (proprietary information is blocked out) and sent to customers.

Certificate #7A - Chemical Composition of Conductors Used in Insulated Wire Products

This certification offers nominal chemical composition of the alloy used in insulated wire products.

Certificate #8 - Certificate of Calibration at Specified Temperatures

This calibration certification provides post-production calibration data. Calibration is performed in the Watlow calibration laboratory with NIST traceable calibration standards. In addition to calibration data, the test standard, equipment, NIST traceability and reference to applicable calibration procedures are stated.

Quality Certification Lab *(Continued)*

Watlow certification verifies that the finished sensor complies with initial calibration tolerances as established by ASTM Standard E 230. This standard is based on the thermodynamic temperature scale of ITS 90.
Initial sensor tolerances are susceptible to change during use due to environmental factors, including contamination, temperature, furnace gradient and physical abuse.
Watlow's advanced capabilities enable sensor calibration across a broad range of temperatures, from cryogenic -100 to 2300°F (-73 to 1260°C).

ISO 10012 is the standard for all sensor and instrument calibration and results are traceable to the National Institute of Standards and Technology (NIST). Following are standard methods and specifications for sensor calibration:

- ASTM E207
- ASTM E220
- ASTM E230
- ASTM E644
- AMS 2750

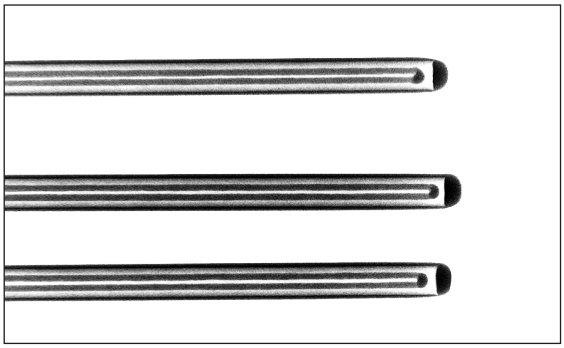

Sensor x-rays verify the nonexistence of cracks at weld points that could let in humidity or gas and potentially shorten the life of the thermocouple.

Certification Testing Offered

Service	Description	Specifications
End-to-end calibration	Compares each end of a length of thermocouple wire, utilizing a common junction measurement test. This is a requirement to verify homogeneity requirements.	ASTM E207, E220, E230
Dielectric testing	Performance levels of wire insulations in the presence of high, local fields caused by electrical discharges. Routinely used in Watlow quality control testing.	ASTM D149
Helium leak test	Verifies the sheath integrity in metal-sheathed cable and sensors to 1000 psi (70 kg/cm^2) in specially designed pressure chambers.	ASTM E235
Radiographic inspection	Determines dimensions and detects and evaluates cracks, voids, inclusions and discontinuities. Technicians are qualified under SNT-TC-1A.	ASTM E94, E142
Metallographic examination	Reveals the constituents and structures of metals. Photomicrographs are also available to determine and document average grain size and structure of prepared specimens.	ASTM E3, E112, E235
Compaction density test	Determines compaction of insulating materials in metal-sheathed cable.	ASTM D2771
Drift test	Determines long-term stability and drift characteristics.	ASTM E601, E644
Thermal cycle test	Subjects individual sensors to repeated cycling through a temperature range.	ASTM E235
Insulation resistance	Measures electrical insulation resistance properties between thermoelements and the sheath at ambient as well as elevated temperatures to determine presence of moisture or impurities, which could affect sensor performance.	ASTM E780, E235, E644

General Information

Watlow offers a wide variety of product test capabilities to verify that the products developed and produced by Watlow meet the most rigorous industry standards.

Watlow continuously invests in developing capabilities to ensure that the proper testing is completed for optimum sensor performance in the customer's application. Below is a list of current Watlow test capabilities.

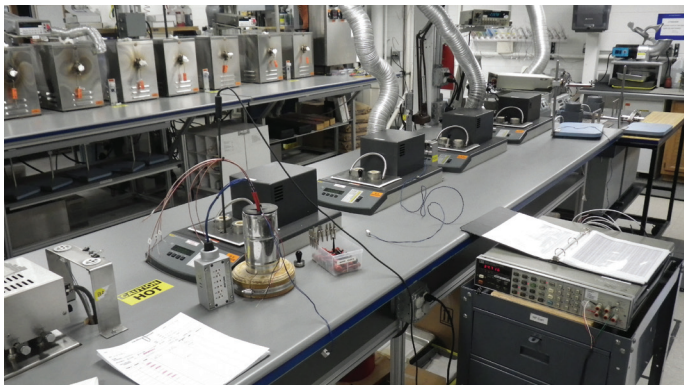

Time response
- Measures sensor output relative to a step change in temperature from ambient up to 160°F (70°C) per ASTM

Vibration
- Sine and random electrodynamic excitation

High temperatures
- Up to 2300°F (1260°C)

Cryogenic temperatures
- -100°F (-74°C) continuously variable up to 32°F (0°C)

Tensile and compression
- Testing to 1,000 lb (500 kg)

Cycle and drift
- Testing up to 2190°F (1200°C)

Dielectric breakdown testing
- Capabilities to 5000VDC

Product	Description	Temperature		Page
		°F	°C	
General Applications Tube and Wire	Feature SERV-RITE® wire in a variety of insulation types with a metal sheath over the thermocouple. Wide variety of mounting options for use in general industrial and commercial applications.	Up to 900	Up to 480	**26**
Mineral Insulated	Fast responding, durable and capable of handling high temperatures with the use of XACTPAK® metal sheathed cable with compacted MgO insulation.	Up to 2200	Up to 1200	**45**
EXACTSENSE®	Exhaust gas temperature sensor that combines rugged thermocouple technology with signal conditioning into one package. The primary benefits are high accuracy, durability, quick response, long immersion depth and high temperature.	-104 to 2192	-40 to 1200	**56**
MICROCOIL™	Miniature thermocouple provides surface temperature measurement.	Up to 1292	Up to 700	**59**
Radio Frequency	Thermocouple designed for use in plasma generation applications.	Up to 932	Up to 500	**61**
TRUE SURFACE	Flat surface temperature sensor that isolates the thermocouple from ambient airflow.	Up to 400	Up to 200	**63**
Multipoints	Accurately measures temperatures at various locations. Constructed with a variety of protection tubes with XACTPAK mineral insulated metal sheathed cable.	Up to 2200	Up to 1200	**65**

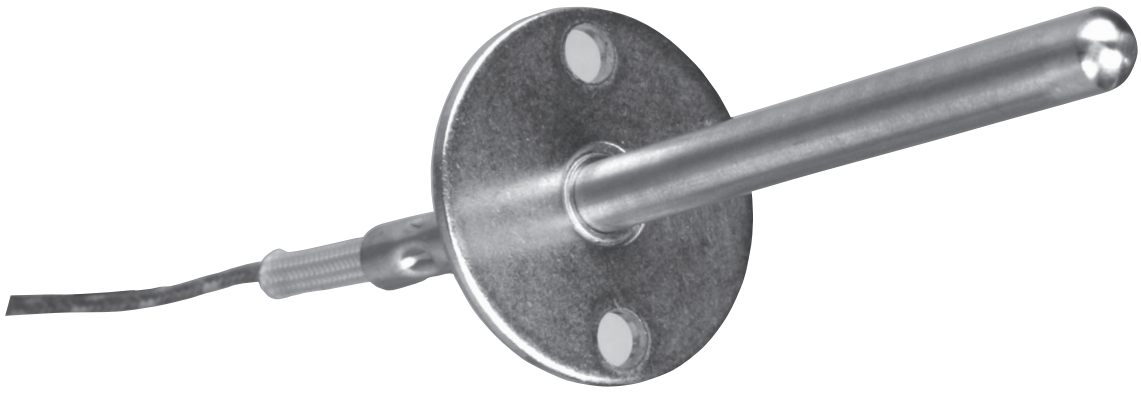

General Information

Calibration Types

Thermocouples are classified by calibration type because they have varying electromotive force (EMF) versus temperature curves. Some generate considerably more voltage at lower temperatures, while others do not begin to develop a significant voltage until subjected to high temperatures. Also, calibration types are designed to deliver as close to a straight line voltage curve inside their temperature application range as possible. This makes it easier for an instrument or temperature controller to correctly correlate the received voltage to a particular temperature.

Additionally, thermocouple calibration types have different levels of compatibility with different atmospheres. Chemical reaction between certain thermocouple alloys and the application atmosphere could cause metallurgy degradation, making another calibration type more suitable for sensor life and accuracy requirements.

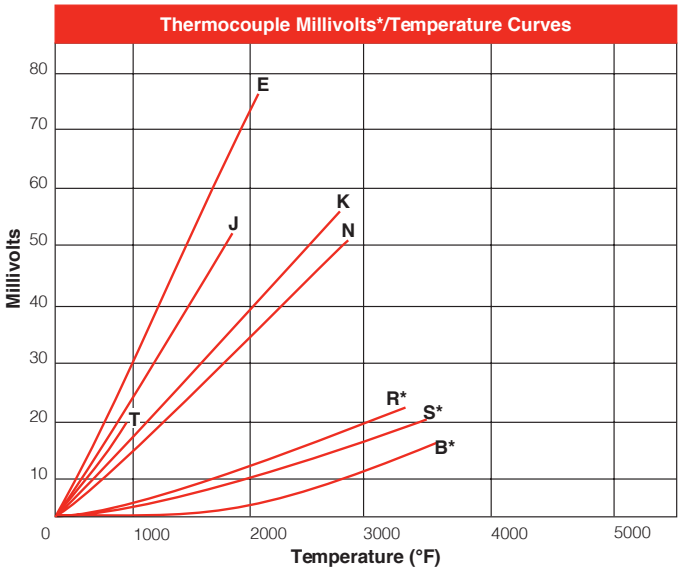

*Millivolt values shown for R and S calibrations pertain to thermocouple calibrations only. RX and SX constructions described in this catalog section are intended for use as **extension wire only** and will not exhibit the millivolt outputs shown.

Thermocouple Types

Calibration types have been established by the American Society for Testing and Materials (ASTM) according to their temperature versus EMF characteristics in accordance with ITS-90, in standard or special tolerances.

Additionally, there are non-ASTM calibration types. These thermocouples are made from tungsten and tungsten-rhenium alloys. Generally used for measuring higher temperatures, they are a more economical alternative to the platinum and platinum alloy based noble metal thermocouples, but limited to use in inert and non-oxidizing atmospheres.

Thermocouple Type	Useful/General Application Range
B	1600-3100°F (870-1700°C)
E*	200-1650°F (95-900°C)
J	200-1400°F (95-760°C)
K*	200-2300°F (95-1260°C)
N	200-2300°F (95-1260°C)
R	32-2700°F (0-1480°C)
S	32-2700°F (0-1480°C)
T*	32-660°F (0-350°C)

*Also suitable for cryogenic applications from -328 to 32°F (-200 to 0°C)

General Information

Calibration Types

Type E

The Type E thermocouple is suitable for use at temperatures up to 1650°F (900°C) in a vacuum, inert, mildly oxidizing or reducing atmosphere. At cryogenic temperatures, the thermocouple is not subject to corrosion. This thermocouple has the highest EMF output per degree of all the commonly used thermocouples.

Type J

Type J is the second most common calibration type and is a good choice for general purpose applications where moisture is not present.

The Type J thermocouple may be used, exposed or unexposed, where there is a deficiency of free oxygen. For cleanliness and longer life, a protection tube is recommended. Since iron (JP) wire will oxidize rapidly at temperatures over 1000°F (540°C), it is recommended that larger gauge wires be used to compensate. Maximum recommended operating temperature is 1400°F (760°C).

Type K

Type K thermocouples usually work in most applications as they are nickel based and exhibit good corrosion resistance. It is the most common sensor calibration type providing the widest operating temperature range.

Due to its reliability and accuracy the Type K thermocouple is used extensively at temperatures up to 2300°F (1260°C). This type of thermocouple should be protected with a suitable metal or ceramic protection tube, especially in reducing atmospheres. In oxidizing atmospheres, such as electric furnaces, tube protection is not always necessary when other conditions are suitable; however, it is recommended for cleanliness and general mechanical protection. Type K will generally outlast Type J because the JP wire rapidly oxidizes, especially at higher temperatures.

Type N

This nickel-based thermocouple alloy is used primarily at high temperatures up to 2300°F (1260°C). While not a direct replacement for Type K, Type N provides better resistance to oxidation at high temperatures and longer life in applications where sulfur is present. It also outperforms Type K in K's aging range.

Type T

This thermocouple can be used in either oxidizing or reducing atmospheres though for longer life a protecting tube is recommended. Because of its stability at lower temperatures, this is a superior thermocouple for a wide variety of applications in low and cryogenic temperatures. Its recommended operating range is -330° to 660°F (-200° to 350°C), but it can be used up to -452°F (-269°C) (boiling helium).

General Information

Maximum Temperatures

The diameter of the sensor wires determines the upper most operating temperature. The larger the diameter, the higher the temperature rating.

Choose alloy 600 over 304 stainless steel (SS) or 316 SS when higher temperatures are expected.

The environment is also a critical factor when determining the best material to use. Consult the manual on ***The Use of Thermocouples in Temperature Measurement,*** published by ASTM for further details.

Recommended Upper Temperature Limit for Protected Thermocouple Wire

Thermocouple Type	No. 8 Gauge °F	No. 8 Gauge (°C)	No. 14 Gauge °F	No. 14 Gauge (°C)	No. 20 Gauge °F	No. 20 Gauge (°C)	No. 24 Gauge °F	No. 24 Gauge (°C)	No. 28 Gauge °F	No. 28 Gauge (°C)
E	1600	(870)	1200	(650)	1000	(540)	800	(430)	800	(430)
J	1400	(760)	1100	(590)	900	(480)	700	(370)	700	(370)
K and N	2300	(1260)	2000	(980)	1800	(980)	1600	(870)	1600	(870)
R and S							2700	(1480)		
T			500	(260)	500	(260)	400	(200)	400	(200)

This table gives the recommended upper temperature limits for the various thermocouples and wire sizes. These limits apply to protected thermocouples in conventional closed-end protecting tubes. They do not apply to sheathed thermocouples with compacted mineral oxide insulation.

The temperature limits shown here are intended only as a guide and should not be taken as absolute values nor as guarantees of satisfactory life or performance. These types and sizes are sometimes used at temperatures above the given limits, but usually at the expense of stability, life or both. In other instances, it may be necessary to reduce the above limits to achieve adequate service.

Mineral Insulated Sensors by Diameter and Sheath

Sheath Diameter in.	Calibration	Sheath Material	Maximum Recommended Operating Temperature °F	Maximum Recommended Operating Temperature (°C)
0.032	K	304 SS/Alloy 600	1600	(871)
0.032	J	304 SS	1500	(816)
0.040	K	304 SS/316 SS/Alloy 600	1600	(871)
0.040	J	304 SS	1500	(816)
0.040	T	304 SS	662	(350)
0.040	E	304 SS	1600	(871)
0.063	K or N	Alloy 600	2000	(1093)
0.063	S	Alloy 600	2000	(1093)
0.063	J	304 SS/316 SS	1500	(816)
0.063	E	304 SS	1600	(871)
0.063	K	304 SS/316 SS	1600	(871)
0.063	K	Hastelloy® X	2200	(1204)
0.125	K or N	Alloy 600	2150	(1177)
0.125	T	304 SS/316 SS/Alloy 600	662	(350)
0.125	E	Alloy 600	1600	(871)
0.125	S	Alloy 600	2150	(1177)
0.125	J	304 SS/316 SS	1500	(816)
0.125	K	304 SS	1600	(871)
0.250	K or N	Alloy 600	2150	(1177)
0.250	J	304 SS/310 SS/316 SS	1500	(816)
0.250	K	304 SS	1600	(871)
0.250	T	304 SS	662	(350)
0.250	E	304 SS/316 SS	1600	(871)
0.250	K	310 SS	2000	(1093)
0.250	K	316 SS	1600	(871)
0.250	T	316 SS	662	(350)
0.250	K	446 SS	2100	(1149)

General Information

Junction Types

Generally, the **grounded junction** offers the best compromise between performance and reliability. It is the best choice for general purpose measurements.

Select an **ungrounded junction** if the lead wire will be shielded and attached to the sheath. Also, select the ungrounded junction to avoid ground loops between instruments, power supplies and the sensor.

Listed below are junction styles offered by Watlow.

Exposed Junction



Thermocouple wires are butt welded, insulated and sealed against liquid or gas penetration. This junction style provides the fastest possible response time but leaves the thermocouple wires unprotected against corrosive or mechanical damage.

Grounded Junction

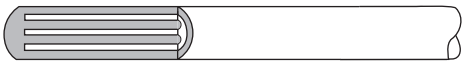

The sheath and conductors are welded together, forming a completely sealed, integral junction. The grounded junction is recommended in the presence of liquids, moisture, gas or high pressure. The wire is protected from corrosive or erosive conditions. Response time with this style approaches that of the exposed junction.

Ungrounded Junction

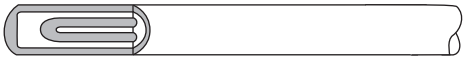

The thermocouple junction is fully insulated from the welded sheath end. The ungrounded junction is excellent for applications where stray EMFs would affect the reading and for frequent or rapid temperature cycling. Response time is longer than with the grounded junction.

Ungrounded Dual Isolated Junction

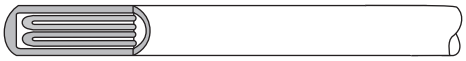

Two separate thermocouples are encased in a single sheath. The isolation prevents ground loop errors if wired to separate instruments. Only available as ungrounded junctions.

General Information

Response Time

The smaller the diameter, the faster the thermocouple responds. Grounding the junction also improves response time by approximately 50 percent based on the sensor achieving 63.2 percent of the final reading or to the first time constant. It takes approximately five time constants to obtain steady state readings.

Temperature accuracy of the surrounding medium depends on the capability of the sensor to conduct heat from its outer sheath to the element wire.

Several factors come into play. Most commonly noted is "time constant" (thermal response time). Time constant, or thermal response time, is an expression of how quickly a sensor responds to temperature changes. As expressed here, time response is defined as the length of time it takes a sensor to reach 63.2 percent of a step temperature change (see graph to the right).

Response is a function of the mass of the sensor and its efficiency in transferring heat from its outer surfaces to the wire sensing element. A rapid time response is essential for accuracy in a system with sharp temperature changes. Time response varies with the probe's physical size and design.

Response times indicated represent standard industrial probes.

Time Constant
(Thermal Response Time)

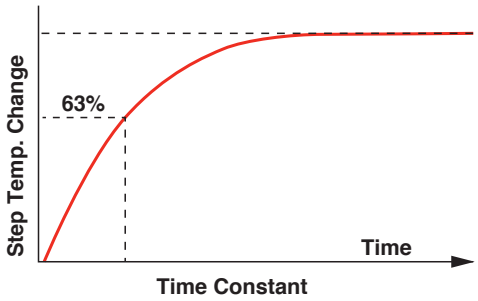

Mineral Insulated Thermocouple Time Response

Sheath Diameter	Average Response Time Still Water (seconds)*	
	Grounded Junction	Ungrounded Junction
0.010 in.	<0.02	<0.02
0.020 in.	<0.02	0.03
0.032 in.	0.02	0.07
0.040 in.	0.04	0.13
0.063 in.	0.22	0.40
0.090 in.	0.33	0.68
0.125 in.	0.50	1.10
0.188 in.	1.00	2.30
0.250 in.	2.20	4.10
0.313 in.	5.00	7.00
0.375 in.	8.00	11.00
0.500 in.	15.00	20.00
0.5 mm	<0.02	0.03
1.0 mm	0.04	0.13
1.5 mm	<0.15	0.35
2.0 mm	0.25	0.55
3.0 mm	0.40	0.90
4.5 mm	0.95	2.00
6.0 mm	2.00	3.50
8.0 mm	5.00	7.00

*Readings are to 63 percent of measured temperatures.

General Information

Thermocouple Resistance

Although resistance cannot confirm that the alloy meets the correct thermoelectric specifications, it checks for other undesirable characteristics such as opens, poor welds or wire corrosion. Always measure thermocouple resistance outside of the application to ensure that EMF output does not conflict with the resistance meter.

Ohms per Double Feet

Long lead wire runs or use of analog-based instrumentation make conductor resistance an important factor when selecting the wire gauge best suited for an application. The table below lists nominal ohms per double feet for thermocouple and thermocouple extension wire. Ohms per double feet are the total resistance, in ohms, for both conductors, per foot.

Nominal Resistance for Thermocouple Alloys in Ohms per Double Feet at 20°C

AUG Gauge	Calibration Type						
	Diameter in. (mm)	E	J	K	N	RX, SX	T
2	0.258 (6.543)	0.011	0.006	0.009	0.012		
4	0.204 (5.189)	0.017	0.009	0.014	0.019		
6	0.162 (4.115)	0.028	0.014	0.023	0.030		
8	0.129 (3.264)	0.044	0.023	0.036	0.048		
10	0.102 (2.588)	0.070	0.036	0.058	0.077		
12	0.081 (2.053)	0.111	0.057	0.092	0.123	0.006	0.048
14	0.064 (1.630)	0.177	0.091	0.147	0.195	0.010	0.076
16	0.051 (1.290)	0.281	0.145	0.233	0.310	0.016	0.120
18	0.040 (1.020)	0.453	0.234	0.376	0.500	0.025	0.194
20	0.032 (0.813)	0.709	0.367	0.589	0.783	0.040	0.304
22	0.025 (0.645)	1.129	0.584	0.937	1.245	0.063	0.483
24	0.020 (0.508)	1.795	0.928	1.490	1.980	0.100	0.768
26	0.016 (0.406)	2.853	1.476	2.369	3.148	0.159	1.221
28	0.013 (0.320)	4.537	2.347	3.767	5.006	0.253	1.942
30	0.010 (0.254)	7.214	3.731	5.990	7.960	0.402	3.088
32	0.008 (0.203)	11.470	5.933	9.524	12.656	0.639	4.910
34	0.006 (0.152)	18.239	9.434	15.145	20.126	1.016	7.808
36	0.005 (0.127)	29.000	15.000	24.080	32.000	1.615	12.415
14 Stranded	0.076 (1.930)	0.161	0.083	0.134	0.178	0.009	0.069
16 Stranded	0.060 (1.520)	0.408	0.133	0.213	0.283	0.014	0.110
18 Stranded	0.048 (1.220)	0.256	0.211	0.338	0.450	0.023	0.174
20 Stranded	0.038 (0.965)	0.648	0.335	0.538	0.715	0.036	0.277
22 Stranded	0.030 (0.762)	1.031	0.533	0.856	1.137	0.057	0.441
24 Stranded	0.024 (0.610)	1.639	0.848	1.361	1.808	0.091	0.701

Note: RX and SX indicate compensating thermocouple materials.

General Information

Thermocouple Resistance

Conductor Sizes

Wire Size	Solid		Stranded		Number of Strands	Strand Gauge
	Diameter		Diameter			
	in.	(mm)	in.	(mm)		
14	0.064	(1.630)	0.076	(1.930)	7	22
16	0.051	(1.290)	0.060	(1.520)	7	24
18	0.040	(1.020)	0.048	(1.220)	7	26
20	0.032	(0.813)	0.038	(0.965)	7	28
22	0.025	(0.635)	0.030	(0.762)	7	30
24	0.020	(0.508)	0.024	(0.610)	7	32
26	0.016	(0.406)				
28	0.013	(0.330)				
30	0.010	(0.254)				
32	0.008	(0.203)				
34	0.006	(0.152)				
36	0.005	(0.127)				

General Information

How Do I Install a Sensor with Spring Loaded Bayonet Cap?

The bayonet adapter is used in conjunction with the spring loaded bayonet cap attached to the sensor sheath. The part to be measured is drilled and tapped for the installation of the bayonet adapter. After placing the sensor through the adapter, the spring is compressed and locked with the bayonet cap. This allows the sensing zone to be pushed tightly against the surface for increased accuracy and faster response time.

"B" Dimension	Adapter Length				
	0.875	1	1.5	2	2.5
2.0	0.500	0.375	2	–	–
2.5	0.875	0.750	0.375	–	–
3.0	1.375	1.250	0.750	0.375	–
3.5	1.875	1.750	1.250	0.750	0.375
4.0	2.375	2.250	1.750	1.250	0.750
4.5	2.875	2.750	0.250	1.750	1.250
5.0	3.375	3.250	2.750	2.250	1.750
5.5	3.875	3.750	3.250	2.750	2.250
6.0	4.375	4.250	3.750	3.250	2.750
6.5	4.875	4.750	4.250	3.750	3.250
7.0	5.375	5.250	4.750	4.250	3.750
7.5	5.875	5.750	5.250	4.750	4.250
8.0	6.375	6.250	5.750	5.250	4.750
8.5	6.875	6.750	6.250	5.750	5.250
9.0	7.375	7.250	6.750	6.250	5.750
9.5	7.875	7.750	7.250	6.750	6.250
10.0	8.375	8.250	7.750	7.250	6.750
10.5	8.875	8.750	8.250	7.750	7.250
11.0	9.375	9.250	8.750	8.250	7.750
11.5	9.875	9.750	9.250	8.750	8.250
12.1	10.375	10.250	9.750	9.250	8.750

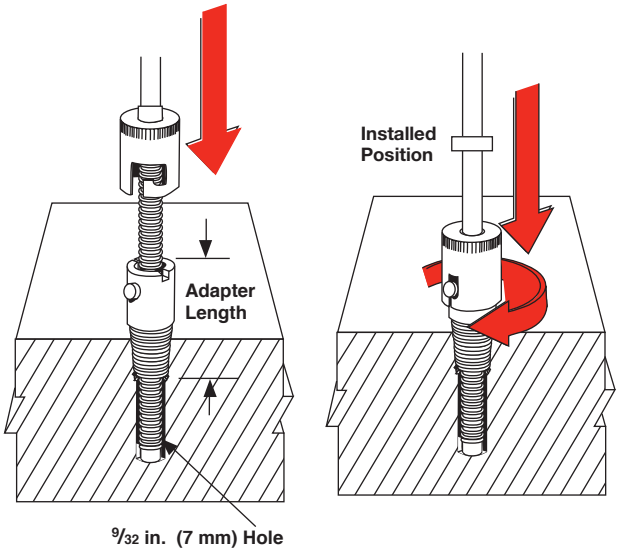

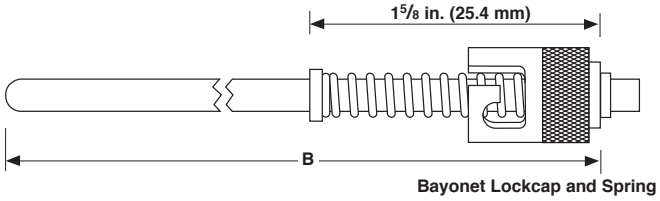

General Applications Tube and Wire

Watlow® is a world class supplier of temperature measurement products, with more than 90 years of manufacturing, research and design expertise.

Companies engaged in critical process control of food and metals rely on Watlow thermocouples. Watlow designs and manufactures sensors to meet customers' industrial and commercial equipment needs.

Watlow has developed an extensive line of thermocouples to meet a broad range of sensing needs.

Performance Capabilities

- Fiberglass insulated thermocouples can reach temperatures up to 900°F (480°C) for continuous operation

Features and Benefits

Standard products including:

- 32 standard sheath lengths
- Lead lengths from six to 360 inches
- Stainless steel braid or hose protection
- J, K, T and E calibrations
- Grounded, ungrounded and exposed junctions
- Flat and drill point
- Epoxy sealed cold ends
- Adjustable depths
- Flexible extensions
- Washers, nozzles and clamp bands
- PFA coated and stainless steel sheaths
- Straight, 45° bend or 90° bend
- Locking bayonet caps in standard
- 300 series stainless tubing

Typical Applications

- Food processing equipment
- De-icing
- Plating baths
- Industrial processing
- Medical equipment
- Pipe tracing control
- Industrial heat treating
- Packaging equipment
- Liquid temperature measurement
- Refrigerator temperature control
- Oven temperature control

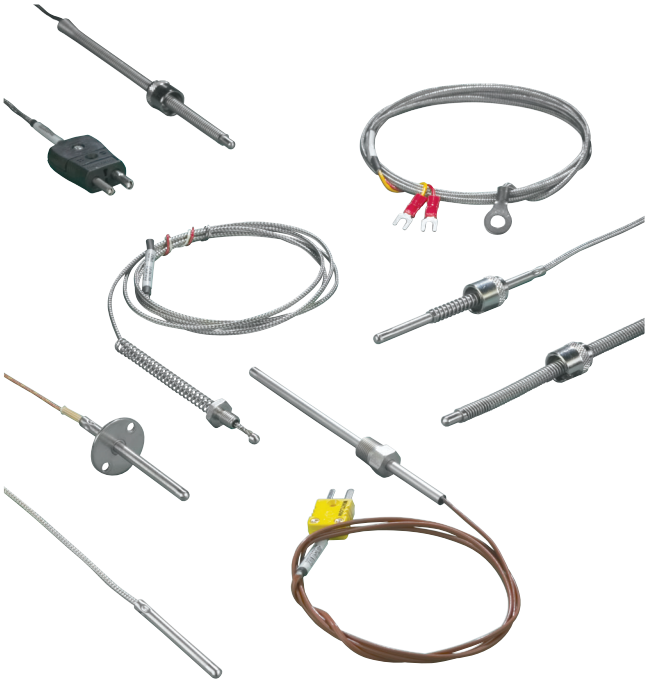

Construction and Tolerances

Thermocouples feature flexible SERV-RITE® wire insulated with woven fiberglass or high temperature engineered resins. For added protection against abrasion, products can be provided with stainless steel wire braid and flexible armor. ASTM E230 color-coding identifies standard catalog thermocouple types.

The addition of a metal sheath over the thermocouple provides rigidity for accurate placement and added protection of the sensing junction. Mounting options include springs, ring terminals, specialized bolts, pipe style clamps and shims.

General Applications Tube and Wire

Bends

Diameter in.	Standard Bend Radius in.	Minimum "A" Dimension in.	Minimum "H" Dimension in.
0.125	3/8	1	2
0.188	3/8	1	2
0.250	1/2	2	2
0.375	3/4	3	2

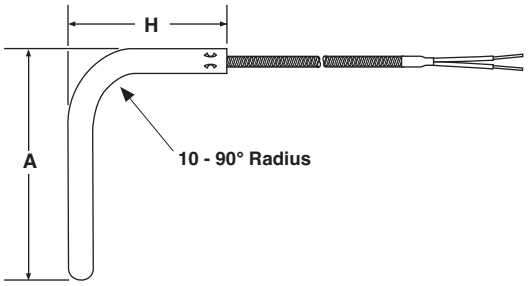

Lead Terminations

Terminations	Code	Length
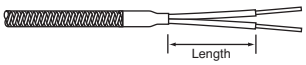 Split Leads	A	2 1/2
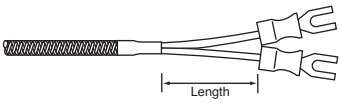 #6 Spade Lugs	B	2 1/2
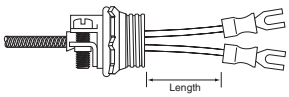 #6 Spade Lugs and BX Connector	C	2 1/2
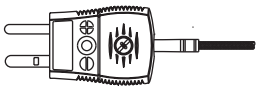 Standard Male Plug	D	—
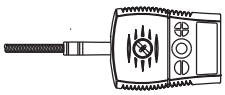 Standard Female Jack	E	—
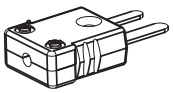 Miniature Male Plug	F	—
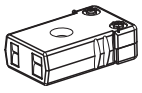 Miniature Female Jack	G	—
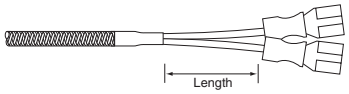 ¼ inch Push-on Connectors	H	2 1/2

General Applications Tube and Wire

Adjustable Spring
Styles 10 and 11

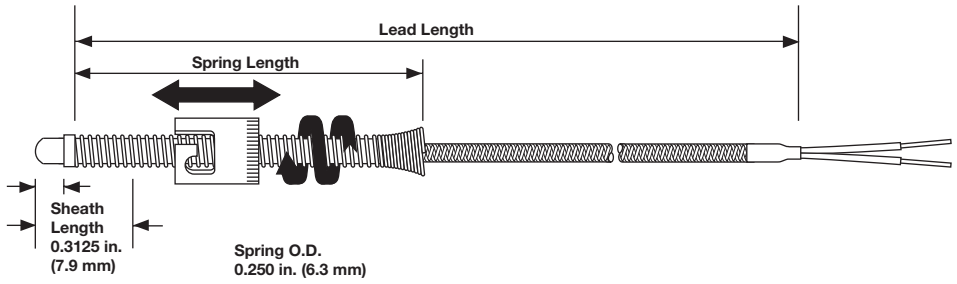

Adjustable spring style thermocouples bend to any angle to fit a wide range of hole depths, eliminating the need to stock numerous styles.

Ordering Information

Part Number

① ② Const. Style	③ Sheath Diameter	④ Calibration	⑤ Lead Protection	⑥ Junction	⑦ Sheath Length	⑧ ⑨ ⑩ Lead Length	⑪ Term./ Options
	D				B		

① ②	Construction Style
10 =	7/16 in. I.D. single slot (standard cap) - 6 in. spring
11 =	7/16 in. I.D. single slot (standard cap) - 12 in. spring

③	Sheath Diameter (in.) 300 Series SS
D =	3/16 in.

④	Calibration
J =	Type J
K =	Type K
T =	Type T
E =	Type E

⑤	Lead Protection
F =	Fiberglass (24 gauge stranded)
S =	Fiberglass with stainless steel overbraid (24 gauge stranded)
P =	Fiberglass (20 gauge stranded)
B =	Fiberglass with stainless steel overbraid (20 gauge stranded)
T =	PFA (24 gauge stranded)
U =	PFA with stainless steel overbraid (24 gauge stranded)
V =	PFA (20 gauge stranded)
W =	PFA with stainless steel overbraid (20 gauge stranded)

⑥	Junction
F =	Grounded, flat tip
G =	Grounded, round tip
D =	Grounded, drill point
R =	Ungrounded, flat tip
U =	Ungrounded, round tip
P =	Ungrounded, drill point

⑦	Sheath Length (in.)
B =	1 in. (25 mm)

⑧ ⑨ ⑩	Lead Length (in.)
Available lengths: 006 to 360 in., over 360 in. contact factory	

⑪	Termination/Options
A =	Standard, 2 1/2 in. split leads
B =	2 1/2 in. split leads with #6 spade lugs
C =	2 1/2 in. split leads with #6 spade lugs and BX connector
D =	Standard male plug, quick disconnect
E =	Standard female jack, quick disconnect
F =	Miniature male plug, quick disconnect
G =	Miniature female jack, quick disconnect
H =	1/4 in. push-on connector

General Applications Tube and Wire

Adjustable Armor
Style 12

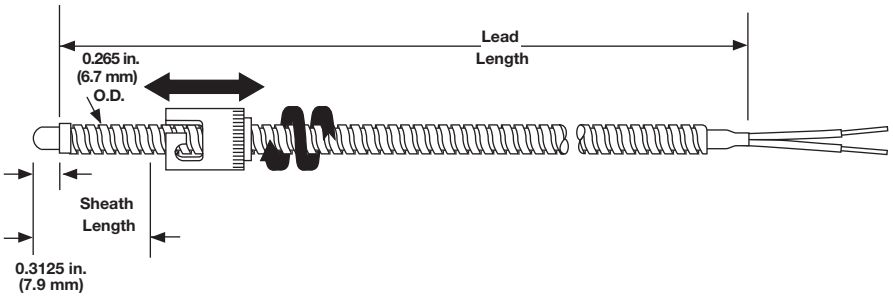

Adjustable armor thermocouples bend to any angle to fit a wide range of hole depths, eliminating the need to stock numerous styles. A stainless steel hose offers additional lead protection in demanding applications.

Ordering Information

Part Number

① ② Const. Style	③ Sheath Diameter	④ Calibration	⑤ Lead Protection	⑥ Junction	⑦ Sheath Length	⑧ ⑨ ⑩ Lead Length	⑪ Term./ Options
12	D				B		

① ②	Construction Style
12 =	Adjustable armor thermocouple, 7/16 in. I.D. single slot (standard cap)

③	Sheath Diameter (in.) 300 Series SS
D =	3/16 in.

④	Calibration
J =	Type J
K =	Type K
T =	Type T
E =	Type E

⑤	Lead Protection
H =	Fiberglass with stainless steel flex hose (24 gauge stranded)
K =	PFA with stainless steel hose (24 gauge stranded)

⑥	Junction
F =	Grounded, flat tip
G =	Grounded, round tip
D =	Grounded, drill point
U =	Ungrounded, round tip
P =	Ungrounded, drill point
R =	Ungrounded, flat tip

⑦	Sheath Length (in.)
B =	1 in.

⑧ ⑨ ⑩	Lead Length (in.)
Available lengths: 006 to 360 in., over 360 in. contact factory	

⑪	Termination/Options
A =	Standard, 2 1/2 in. split leads
B =	2 1/2 in. split leads with #6 spade lugs
C =	2 1/2 in. split leads with #6 spade lugs and BX connector
D =	Standard male plug, quick disconnect
E =	Standard female jack, quick disconnect
F =	Miniature male plug, quick disconnect
G =	Miniature female jack, quick disconnect
H =	1/4 in. push-on connector

General Applications Tube and Wire

Rigid Sheath
Styles 20, 21 and 22
⅛ and 3⁄16 inch Diameter

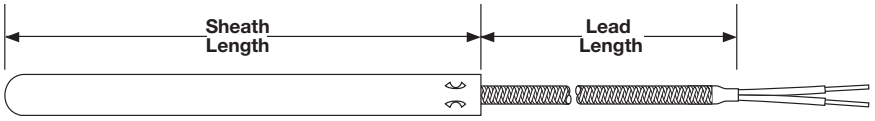

The rigid sheath provides protection and accurate placement through bulkheads or platens. Use with a compression fitting for water tight immersion application.

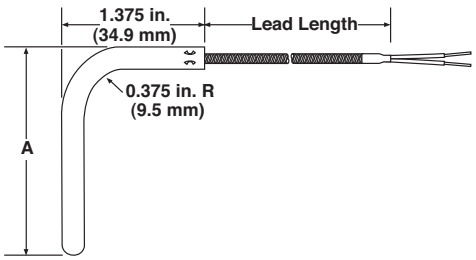

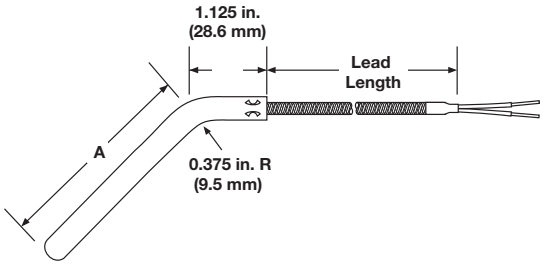

Ordering Information

Part Number

① ② Const. Style	③ Sheath Diameter	④ Calibration	⑤ Lead Protection	⑥ Junction	⑦ Sheath Length	⑧ ⑨ ⑩ Lead Length	⑪ Term./ Options

① ②	Construction Style
20 =	Plain sheath, straight
21 =	Plain sheath, 45° bend
22 =	Plain sheath, 90° bend

③	Sheath Diameter (in.) 300 Series SS
C =	1⁄8 in.
D =	3⁄16 in.
T =	3⁄16 in. epoxy sealed 300°F (149°C)

④	Calibration
J =	Type J
K =	Type K
T =	Type T
E =	Type E

⑤	Lead Protection
F =	Fiberglass (24 gauge stranded)
S =	Fiberglass with stainless steel overbraid (24 gauge stranded)
H =	Fiberglass with stainless steel hose (24 gauge stranded)
P* =	Fiberglass (20 gauge stranded)
B* =	Fiberglass with stainless steel overbraid (20 gauge stranded)
T =	PFA (24 gauge stranded)
U =	PFA with stainless steel overbraid (24 gauge stranded)
K =	PFA with stainless steel hose (24 gauge stranded)
V* =	PFA (20 gauge stranded)
W* =	PFA with stainless steel overbraid (20 gauge stranded)
* Not available with ⅛ in. diameter sheath.	

⑥	Junction
F =	Grounded, flat tip
G =	Grounded, round tip
D =	Grounded, drill point
R =	Ungrounded, flat tip
U =	Ungrounded, round tip
P =	Ungrounded, drill point
E =	Exposed

⑦	Sheath Length (in.)				
A* =	1⁄2 in.	J =	4 1⁄2 in.	S =	8 1⁄2 in.
B* =	1 in.	K =	5 in.	T =	9 in.
C =	1 1⁄2 in.	L =	5 1⁄2 in.	U =	9 1⁄2 in.
D =	2 in.	M =	6 in.	W =	10 in.
E =	2 1⁄2 in.	N =	6 1⁄2 in.	Y =	11 in.
F =	3 in.	P =	7 in.	Z =	12 in.
G =	3 1⁄2 in.	Q =	7 1⁄2 in.		
H =	4 in.	R =	8 in.		
* Not available in construction style 21 and 22.					

⑧ ⑨ ⑩	Lead Length (in.)
Available lengths: 006 to 360 in., over 360 in. contact factory	

⑪	Termination/Options
A =	Standard, 2½ in. split leads
B =	2 1⁄2 in. split leads with #6 spade lugs
C =	2 1⁄2 in. split leads with #6 spade lugs and BX connector
D =	Standard male plug, quick disconnect
E =	Standard female jack, quick disconnect
F =	Miniature male plug, quick disconnect
G =	Miniature female jack, quick disconnect
H =	1⁄4 in. push-on connector

General Applications Tube and Wire

Rigid Sheath with Threaded Fitting
Styles 23 and 24
⅛ and 3⁄16 inch Diameter

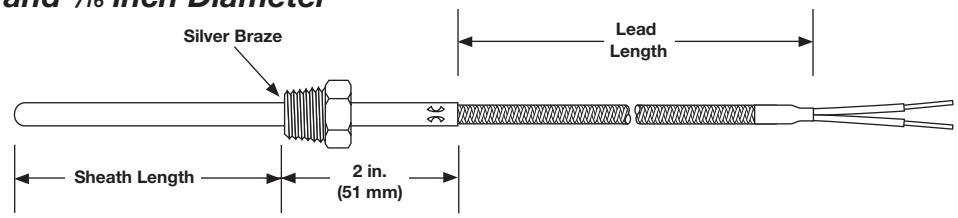

Rigid sheath with threaded fitting provides accurate placement in process applications.

Ordering Information

Part Number

① ② Const. Style	③ Sheath Diameter	④ Calibration	⑤ Lead Protection	⑥ Junction	⑦ Sheath Length	⑧ ⑨ ⑩ Lead Length	⑪ Term./ Options

① ②	Construction Style
23 =	Straight sheath with ⅛ in. National Pipe Thread (NPT) SS fitting
24 =	Straight sheath with ½ in. NPT SS fitting

③	Sheath Diameter (in.) 300 Series SS
C =	⅛ in.
D =	3⁄16 in.
T =	3⁄16 in. epoxy sealed 300°F (149°C)

④	Calibration
J =	Type J
K =	Type K
T =	Type T
E =	Type E

⑤	Lead Protection
F =	Fiberglass (24 gauge stranded)
S =	Fiberglass with stainless steel overbraid (24 gauge stranded)
H =	Fiberglass with stainless steel hose (24 gauge stranded)
P* =	Fiberglass (20 gauge stranded)
B* =	Fiberglass with stainless steel overbraid (20 gauge stranded)
T =	PFA (24 gauge stranded)
U =	PFA with stainless steel overbraid (24 gauge stranded)
K =	PFA with stainless steel hose (24 gauge stranded)
V* =	PFA (20 gauge stranded)
W* =	PFA with stainless steel overbraid (20 gauge stranded)

* Not available with ⅛ in. diameter sheath.

⑥	Junction
F =	Grounded, flat tip
G =	Grounded, round tip
D =	Grounded, drill point
R =	Ungrounded, flat tip
U =	Ungrounded, round tip
P =	Ungrounded, drill point
E =	Exposed

⑦	Sheath Length (in.)				
A =	½ in.	J =	4½ in.	S =	8½ in.
B =	1 in.	K =	5 in.	T =	9 in.
C =	1½ in.	L =	5½ in.	U =	9½ in.
D =	2 in.	M =	6 in.	W =	10 in.
E =	2½ in.	N =	6½ in.	Y =	11 in.
F =	3 in.	P =	7 in.	Z =	12 in.
G =	3½ in.	Q =	7½ in.		
H =	4 in.	R =	8 in.		

⑧ ⑨ ⑩	Lead Length (in.)
Available lengths: 006 to 360 in., over 360 in. contact factory	

⑪	Termination/Options
A =	Standard, 2½ in. split leads
B =	2½ in. split leads with #6 spade lugs
C =	2½ in. split leads with #6 spade lugs and BX connector
D =	Standard male plug, quick disconnect
E =	Standard female jack, quick disconnect
F =	Miniature male plug, quick disconnect
G =	Miniature female jack, quick disconnect
H =	¼ in. push-on connector

General Applications Tube and Wire

Flange
Style 25

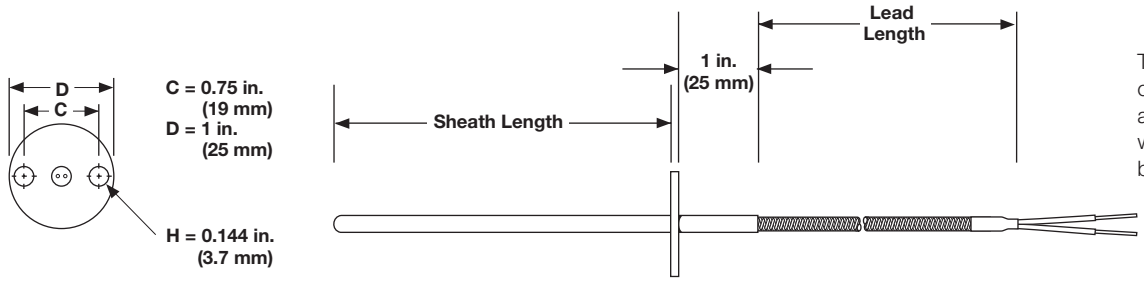

The flanged thermocouple allows rapid assembly and low profile when going through bulkheads.

Ordering Information

Part Number

① ② Const. Style	③ Sheath Diameter	④ Calibration	⑤ Lead Protection	⑥ Junction	⑦ Sheath Length	⑧ ⑨ ⑩ Lead Length	⑪ Term./ Options
25							

① ②	Construction Style
25 =	Thermocouple with flange

③	Sheath Diameter (in.) 300 Series SS
C =	1/8 in.
D =	3/16 in.
T =	3/16 in. epoxy sealed 300°F (149°C)

④	Calibration
J =	Type J
K =	Type K
T =	Type T
E =	Type E

⑤	Lead Protection
F =	Fiberglass (24 gauge stranded)
S =	Fiberglass with stainless steel overbraid (24 gauge stranded)
H =	Fiberglass with stainless steel hose (24 gauge stranded)
P* =	Fiberglass (20 gauge stranded)
B* =	Fiberglass with stainless steel overbraid (20 gauge stranded)
T =	PFA (24 gauge stranded)
U =	PFA with stainless steel overbraid (24 gauge stranded)
K =	PFA with stainless steel hose (24 gauge stranded)
V* =	PFA (20 gauge stranded)
W* =	PFA with stainless steel overbraid (20 gauge stranded)

* Not available with 1/8 in. diameter sheath.

⑥	Junction
F =	Grounded, flat tip
G =	Grounded, round tip
D =	Grounded, drill point
R =	Ungrounded, flat tip
U =	Ungrounded, round tip
P =	Ungrounded, drill point
E =	Exposed

* Not available with 1/8 in. diameter sheath.

⑦	Sheath Length (in.)				
D =	2 in.	L =	5 1/2 in.	T =	9 in.
E =	2 1/2 in.	M =	6 in.	U =	9 1/2 in.
F =	3 in.	N =	6 1/2 in.	W =	10 in.
G =	3 1/2 in.	P =	7 in.	Y =	11 in.
H =	4 in.	Q =	7 1/2 in.	Z =	12 in.
J =	4 1/2 in.	R =	8 in.		
K =	5 in.	S =	8 1/2 in.		

⑧ ⑨ ⑩	Lead Length (in.)
Available lengths: 006 to 360 in., over 360 in. contact factory	

⑪	Termination/Options
A =	Standard, 2 1/2 in. split leads
B =	2 1/2 in. split leads with #6 spade lugs
C =	2 1/2 in. split leads with #6 spade lugs and BX connector
D =	Standard male plug, quick disconnect
E =	Standard female jack, quick disconnect
F =	Miniature male plug, quick disconnect
G =	Miniature female jack, quick disconnect
H =	1/4 in. push-on connector

General Applications Tube and Wire

Rigid Sheath
Styles 30, 31 and 32

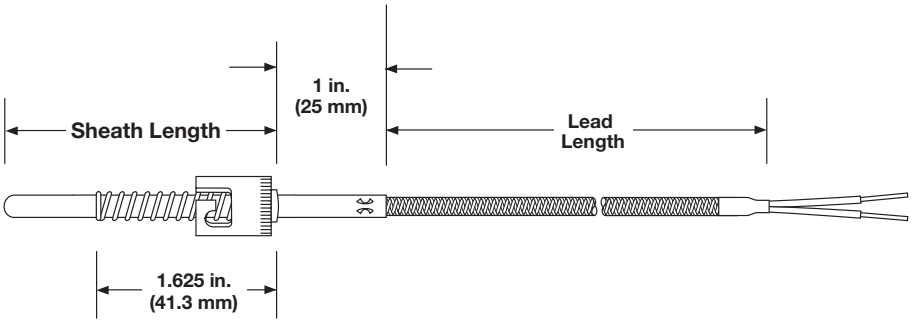

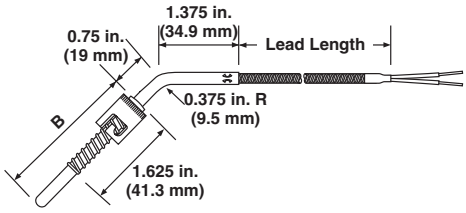

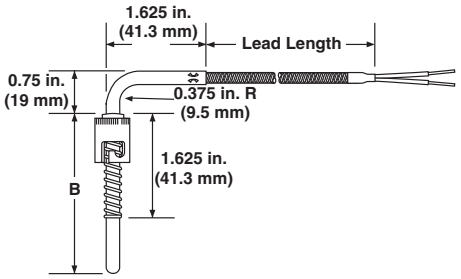

Bayonet fittings allow rapid attachment. Spring pressure on the junction tip assures fast response time.

This style of bayonet fitting connects quickly and allows leads to exit with a protective sheath.

Ordering Information

Part Number

① ② Const. Style	③ Sheath Diameter	④ Calibration	⑤ Lead Protection	⑥ Junction	⑦ Sheath Length	⑧ ⑨ ⑩ Lead Length	⑪ Term./ Options

① ②	Construction Style
30 =	7/16 in. I.D. single slot (standard cap) straight
31 =	7/16 in. I.D. single slot (standard cap) with spring, 45° bend
32 =	7/16 in. I.D. single slot (standard cap) with spring, 90° bend

③	Sheath Diameter (in.) 300 Series SS
C =	1/8 in.
D =	3/16 in.
T =	3/16 in. epoxy sealed 300°F (149°C)

④	Calibration
J =	Type J
K =	Type K
T =	Type T
E =	Type E

⑤	Lead Protection
F =	Fiberglass (24 gauge stranded)
S =	Fiberglass with stainless steel overbraid (24 gauge stranded)
H =	Fiberglass with stainless steel hose (24 gauge stranded)
P* =	Fiberglass (20 gauge stranded)
B* =	Fiberglass with stainless steel overbraid (20 gauge stranded)
T =	PFA (24 gauge stranded)
U =	PFA with stainless steel overbraid (24 gauge stranded)
K =	PFA with stainless steel hose (24 gauge stranded)
V* =	PFA (20 gauge stranded)
W* =	PFA with stainless steel overbraid (20 gauge stranded)

* Not available with 1/8 in. diameter sheath.

⑥	Junction
F =	Grounded, flat tip
G =	Grounded, round tip
D =	Grounded, drill point
R =	Ungrounded, flat tip
U =	Ungrounded, round tip
P =	Ungrounded, drill point
E =	Exposed

⑦	Sheath Length (in.)				
D =	2 in.	L =	5 1/2 in.	T =	9 in.
E =	2 1/2 in.	M =	6 in.	U =	9 1/2 in.
F =	3 in.	N =	6 1/2 in.	W =	10 in.
G =	3 1/2 in.	P =	7 in.	Y =	11 in.
H =	4 in.	Q =	7 1/2 in.	Z =	12 in.
J =	4 1/2 in.	R =	8 in.		
K =	5 in.	S =	8 1/2 in.		

⑧ ⑨ ⑩	Lead Length (in.)
Available lengths: 006 to 360 in., over 360 in. contact factory	

⑪	Termination/Options
A =	Standard, 2 1/2 in. split leads
B =	2 1/2 in. split leads with #6 spade lugs
C =	2 1/2 in. split leads with #6 spade lugs and BX connector
D =	Standard male plug, quick disconnect
E =	Standard female jack, quick disconnect
F =	Miniature male plug, quick disconnect
G =	Miniature female jack, quick disconnect
H =	1/4 in. push-on connector

General Applications Tube and Wire

Large Diameter Rigid Sheath
Styles 40, 41 and 42

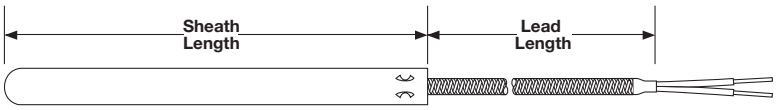

The rigid sheath provides protection and accurate placement through bulkheads or platens. Use with a compression fitting for water tight immersion application.

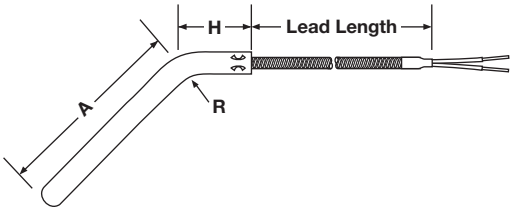

The bent rigid tube offers protection and accurate lead placement around machinery.

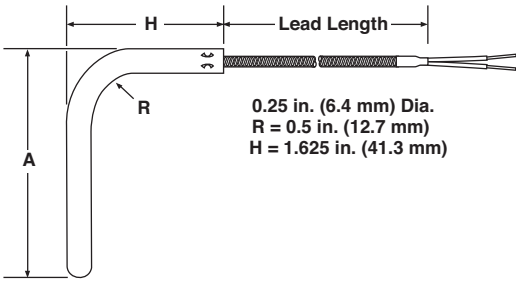

Ordering Information

Part Number

① ② Const. Style	③ Sheath Diameter	④ Calibration	⑤ Lead Protection	⑥ Junction	⑦ Sheath Length	⑧ ⑨ ⑩ Lead Length	⑪ Term./ Options

① ②	Construction Style
40 =	Plain sheath, straight, large, diameter
41 =	Plain (45°) large diameter
42 =	Plain (90°) large diameter

③	Sheath Diameter (in.) 300 Series SS
E =	1/4 in.
U =	1/4 in. epoxy sealed 300°F (149°C)

④	Calibration
J =	Type J
K =	Type K
T =	Type T
E =	Type E

⑤	Lead Protection
F =	Fiberglass (24 gauge stranded)
S =	Fiberglass with stainless steel overbraid (24 gauge stranded)
H =	Fiberglass with stainless steel hose (24 gauge stranded)
P =	Fiberglass (20 gauge stranded)
B =	Fiberglass with stainless steel overbraid (20 gauge stranded)
T =	PFA (24 gauge stranded)
U =	PFA with stainless steel overbraid (24 gauge stranded)
K =	PFA with stainless steel hose (24 gauge stranded)
V =	PFA (20 gauge stranded)
W =	PFA with stainless steel overbraid (20 gauge stranded)

⑥	Junction
F =	Grounded, flat tip
G =	Grounded, round tip
R =	Ungrounded, flat tip
U =	Ungrounded, round tip
E =	Exposed

⑦					
	Sheath Length (in.)				
A =	1 in.	J =	9 in.	S =	17 in.
B =	2 in.	K =	10 in.	T =	18 in.
C =	3 in.	L =	11 in.	U =	19 in.
D =	4 in.	M =	12 in.	W =	20 in.
E =	5 in.	N =	13 in.	Y =	22 in.
F =	6 in.	P =	14 in.	Z =	24 in.
G =	7 in.	Q =	15 in.		
H =	8 in.	R =	16 in.		

⑧ ⑨ ⑩	Lead Length (in.)
Available lengths: 006 to 360 in., over 360 in. contact factory	

⑪	Termination/Options
A =	Standard, 2 1/2 in. split leads
B =	2 1/2 in. split leads with #6 spade lugs
C =	2 1/2 in. split leads with #6 spade lugs and BX connector
D =	Standard male plug, quick disconnect
E =	Standard female jack, quick disconnect
F =	Miniature male plug, quick disconnect
G =	Miniature female jack, quick disconnect
H =	1/4 in. push-on connector

General Applications Tube and Wire

Flexible Extensions
Style 60

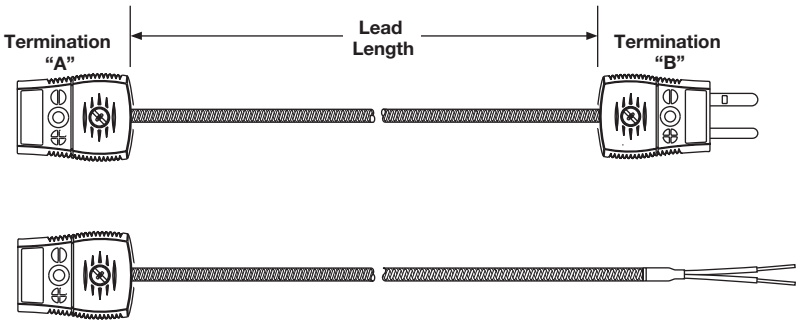

Flexible extensions allow thermocouples to be disconnected from a system without disturbing the remaining wiring.

Ordering Information

Part Number

① ② Const. Style	③ Diameter	④ Calibration	⑤ Lead Protection	⑥ Junction	⑦ Term. "A"/ Options	⑧ ⑨ ⑩ Lead Length	⑪ Term. B/ Options
60	X			X			

① ②	Construction Style
60 =	Flexible extension

③	Diameter
X =	Not applicable

④	Calibration
J =	Type J
K =	Type K
T =	Type T
E =	Type E

⑤	Lead Protection
F =	Fiberglass (24 gauge stranded)
S =	Fiberglass with stainless steel overbraid (24 gauge stranded)
H =	Fiberglass with stainless steel hose (24 gauge stranded)
P =	Fiberglass (20 gauge stranded)
B =	Fiberglass with stainless steel overbraid (20 gauge stranded)
T =	PFA (24 gauge stranded)
U =	PFA with stainless steel overbraid (24 gauge stranded)
K =	PFA with stainless steel hose (24 gauge stranded)
V =	PFA (20 gauge stranded)
W =	PFA with stainless steel overbraid (20 gauge stranded)

⑥	Junction
X =	Not applicable

⑦	Termination "A"/Options
A =	Standard, 2 1/2 in. split leads
B =	2 1/2 in. split leads with spade lugs
C =	2 1/2 in. split leads with spade lugs and BX connector
D =	Standard male plug, quick disconnect
E =	Standard female jack, quick disconnect
F* =	Miniature male plug, quick disconnect
G* =	Miniature female jack, quick disconnect
H =	1/4 in. push-on connector
*Not available with SS hose.	

⑧ ⑨ ⑩	Lead Length (in.)
Available lengths: 006 to 360 in., over 360 in. contact factory	

⑪	Termination "B"/Options
A =	Standard, 2 1/2 in. split leads
B =	2 1/2 in. split leads with #6 spade lugs
C =	2 1/2 in. split leads with #6 spade lugs and BX connector
D =	Standard male plug, quick disconnect
E =	Standard female jack, quick disconnect
F =	Miniature male plug, quick disconnect
G =	Miniature female jack, quick disconnect
H =	1/4 in. push-on connector

General Applications Tube and Wire

Insulated Wire
Styles 61 and 62

Constructed with SERV-RITE insulated thermocouple wire, Styles 61 and 62, are economical and versatile and can be ordered with an exposed or protected measuring junction. Style 61 is fitted with an exposed junction and is suitable for most general purpose applications, such as measuring air, gas and surface temperatures. Style 62 is fitted with an encapsulated measuring junction that is ideal for corrosive fluids and gases, such as sulfuric acid, hydrofluoric acid, strong mineral acids and oils.

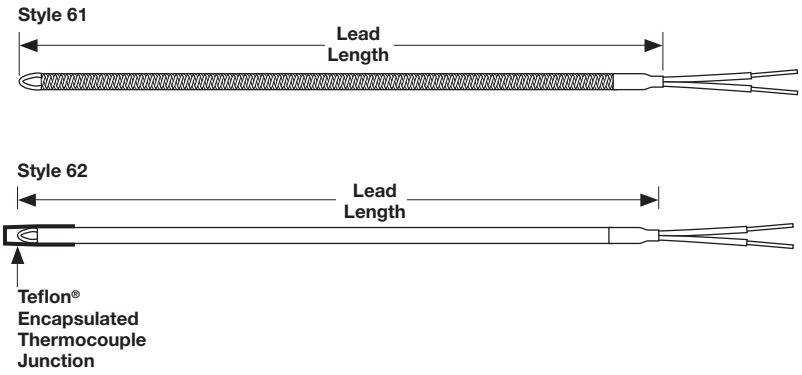

Ordering Information

Part Number

① ② Const. Style	③ Diameter	④ Calibration	⑤ Lead Protection	⑥ Junction	⑦ Termination "A"	⑧ ⑨ ⑩ Lead Length	⑪ Term./ Options
	X			E	X		

① ②	Construction Style
61 =	SERIES 61
62* =	SERIES 62
*Only available with wire (lead protection) options J or T (4th digit).	

③	Diameter
X =	Not applicable

④	Calibration
J =	Type J
K =	Type K
T =	Type T
E =	Type E

⑤	Lead Protection
P =	Fiberglass (20 gauge solid)
B =	Fiberglass with stainless steel overbraid (20 gauge solid)
F =	Fiberglass (24 gauge solid)
S =	Fiberglass with stainless steel overbraid (24 gauge solid)
T =	Extruded PFA (24 gauge solid)
J =	Extruded PFA (20 gauge solid)

⑥	Junction
E =	Exposed

⑧ ⑨ ⑩	Lead Length (in.)
Available lengths: 006 to 360 in., over 360 in. contact factory	

⑪	Termination/Options
A =	Standard, 2 1/2 in. split leads
B =	2 1/2 in. split leads with spade lugs
C =	2 1/2 in. split leads with #6 spade lugs and BX connector
D =	Standard male plug, quick disconnect
E =	Standard female jack, quick disconnect
F =	Miniature male plug, quick disconnect
G =	Miniature female jack, quick disconnect
H =	1/4 in. push-on connector

General Applications Tube and Wire

Perfluoroalkoxy (PFA) Encapsulated Style 65

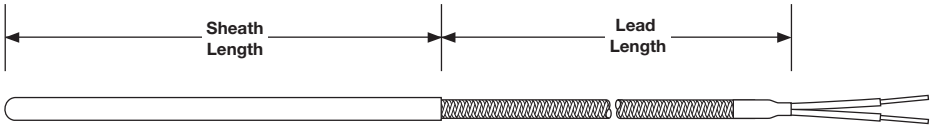

The rigid sheath is covered with a 0.010 in. (0.25 mm) wall of PFA for corrosion resistance in acid environments. An epoxy seal improves moisture resistance of the sensor and provides a barrier for migrating fumes in corrosive applications.

Ordering Information

Part Number

① ② Const. Style	③ Diameter Under Covering	④ Calibration	⑤ Lead Protection	⑥ Junction	⑦ Sheath Length	⑧ ⑨ ⑩ Lead Length	⑪ Term./ Options
65							

① ②	Construction Style
65 =	PFA coated sheath

③	Diameter (in.) Under Covering
D =	3/16 in. epoxy sealed 300°F (149°C)
E =	1/4 in. epoxy sealed 300°F (149°C)

④	Calibration
J =	Type J
K =	Type K
T =	Type T
E =	Type E

⑤	Lead Protection
T =	PFA (24 gauge stranded)
V =	PFA (20 gauge stranded)

⑥	Junction
U =	Ungrounded, round tip
G =	Grounded, round tip

⑦	Sheath Length (in.)				
B =	1 in.	J =	4 1/2 in.	R =	8 in.
C =	1 1/2 in.	K =	5 in.	S =	8 1/2 in.
D =	2 in.	L =	5 1/2 in.	T =	9 in.
E =	2 1/2 in.	M =	6 in.	U =	9 1/2 in.
F =	3 in.	N =	6 1/2 in.	W =	10 in.
G =	3 1/2 in.	P =	7 in.	Y =	11 in.
H =	4 in.	Q =	7 1/2 in.	Z =	12 in.

⑧ ⑨ ⑩	Lead Length (in.)
Available lengths: 006 to 360 in., over 360 in. contact factory	

⑪	Termination/Options
A =	Standard, 2 1/2 in. split leads
B =	2 1/2 in. split leads with #6 spade lugs
C =	2 1/2 in. split leads with #6 spade lugs and BX connector
D =	Standard male plug, quick disconnect
E =	Standard female jack, quick disconnect
F =	Miniature male plug, quick disconnect
G =	Miniature female jack, quick disconnect
H =	1/4 in. push-on connector

General Applications Tube and Wire

Ring Terminal
Style 70

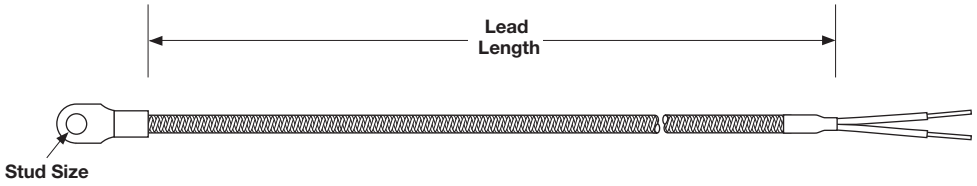

The nickel terminal can be placed beneath existing screws or bolts to permit surface temperature measurement.

Note: Grounded junction shown.

Ordering Information

Part Number

① ② Const. Style	③ Diameter	④ Calibration	⑤ Lead Protection	⑥ Junction	⑦ Stud Size Hole Diameter	⑧ ⑨ ⑩ Lead Length	⑪ Term./ Options
70	X						

① ②	Construction Style
70 =	Ring terminal thermocouple

③	Diameter
X =	Not applicable

④	Calibration
J =	Type J
K =	Type K
T =	Type T
E =	Type E

⑤	Lead Protection
F =	Fiberglass (24 gauge stranded)
S =	Fiberglass with stainless steel overbraid (24 gauge stranded)
P =	Fiberglass (20 gauge stranded)
B =	Fiberglass with stainless steel overbraid (20 gauge stranded)
T =	PFA (24 gauge stranded)
U =	PFA with stainless steel overbraid (24 gauge stranded)
V =	PFA (20 gauge stranded)
W =	PFA with stainless steel overbraid (20 gauge stranded)

⑥	Junction
G =	Grounded
U* =	Ungrounded
*Only available with 24 gauge wire.	

⑦	Stud Size - Hole Diameter (in.)
A* =	No. 6
B* =	No. 8
C* =	No. 10
D =	1/4
E =	3/8
*Only available with 24 gauge wire.	

⑧ ⑨ ⑩	Lead Length (in.)
Available lengths: 006 to 360 in., over 360 in. contact factory	

⑪	Termination/Options
A =	Standard, 2 1/2 in. split leads
B =	2 1/2 in. split leads with #6 spade lugs
C =	2 1/2 in. split leads with #6 spade lugs and BX connector
D =	Standard male plug, quick disconnect
E =	Standard female jack, quick disconnect
F =	Miniature male plug, quick disconnect
G =	Miniature female jack, quick disconnect
H =	1/4 in. push-on connector

General Applications Tube and Wire

Nozzle
Style 71

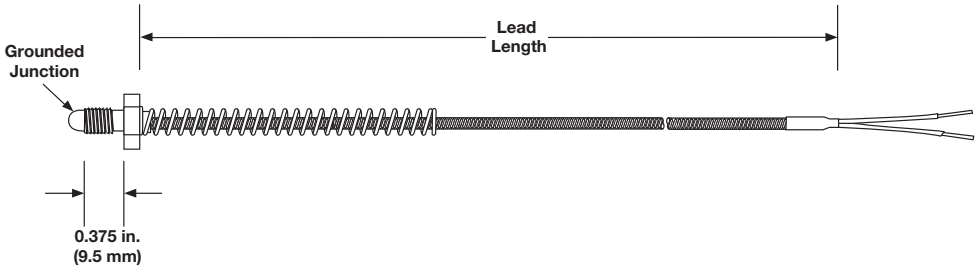

The nozzle thermocouple has a short installation depth and a low profile to allow control of thin platen sections.

Ordering Information

Part Number

① ② Const. Style	③ Diameter	④ Calibration	⑤ Lead Protection	⑥ Junction	⑦ 304 SS Bolt Size	⑧ ⑨ ⑩ Lead Length	⑪ Term./ Options
71	X			G			

① ②	Construction Style
71 =	Nozzle thermocouple

③	Diameter
X =	Not applicable

④	Calibration
J =	Type J
K =	Type K
T =	Type T
E =	Type E

⑤	Lead Protection
F =	Fiberglass (24 gauge stranded)
S =	Fiberglass with stainless steel overbraid (24 gauge stranded)
P* =	Fiberglass (20 gauge stranded)
B* =	Fiberglass with stainless steel overbraid (20 gauge stranded)
T =	PFA (24 gauge stranded)
U =	PFA with stainless steel overbraid (24 gauge stranded)
V* =	PFA (20 gauge stranded)
W* =	PFA with stainless steel overbraid (20 gauge stranded)

*Not available with ungrounded junction.

⑥	Junction
G =	Grounded

⑦	304 SS, Bolt Size
A =	1/4 in. x 28 UNF, 3/8 in. thread depth
B =	8-32 thread
C =	10-32 thread
M =	M6 x 1

⑧ ⑨ ⑩	Lead Length (in.)
Available lengths: 006 to 360 in., over 360 in. contact factory	

⑪	Termination/Options
A =	Standard, 2 1/2 in. split leads
B =	2 1/2 in. split leads with #6 spade lugs
C =	2 1/2 in. split leads with #6 spade lugs and BX connector
D =	Standard male plug, quick disconnect
E =	Standard female jack, quick disconnect
F =	Miniature male plug, quick disconnect
G =	Miniature female jack, quick disconnect
H =	1/4 in. push-on connector

General Applications Tube and Wire

Pipe Clamp
Style 72

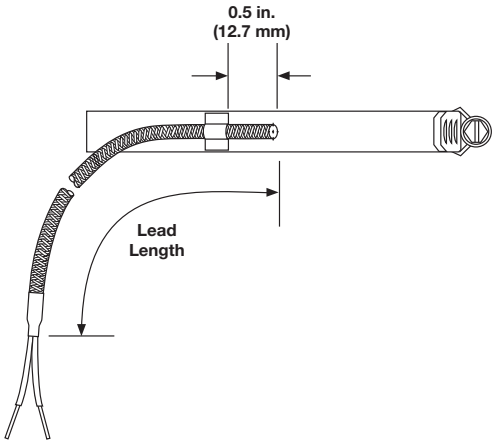

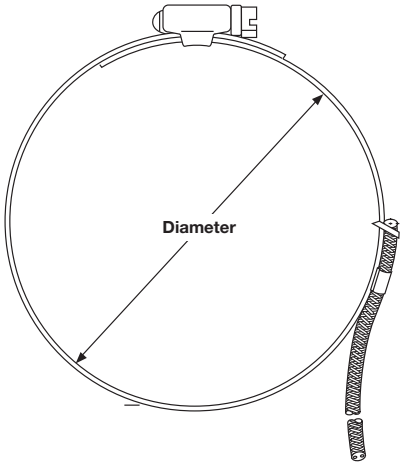

The stainless steel clamp allows temperature measurement without drilling or tapping, which is ideal for measuring pipe temperatures.

Ordering Information

Part Number

① ② Const. Style	③ Diameter	④ Calibration	⑤ Lead Protection	⑥ Junction	⑦ Clamp Band Dia. Range	⑧ ⑨ ⑩ Lead Length	⑪ Term./ Options
72	X			G			

① ②	Construction Style
72 =	Pipe clamp thermocouple

③	Diameter
X =	Not applicable

④	Calibration
J =	Type J
K =	Type K
T =	Type T
E =	Type E

⑤	Lead Protection
S =	Fiberglass with stainless steel overbraid (24 gauge stranded)
B =	Fiberglass with stainless steel overbraid (20 gauge stranded)
U =	PFA with stainless steel overbraid (24 gauge stranded)
W =	PFA with stainless steel overbraid (20 gauge stranded)

⑥	Junction
G =	Grounded

⑦	Clamp Band Diameter Range (in.)
A =	$11/16$ to $1\,1/4$
B =	$1\,1/4$ to $2\,1/4$
C =	$2\,1/4$ to $3\,1/4$
D =	$3\,1/4$ to $4\,1/4$
E =	$4\,1/4$ to 5
F =	5 to 6
G =	6 to 7

⑧ ⑨ ⑩	Lead Length (in.)
Available lengths: 006 to 360 in., over 360 in. contact factory	

⑪	Termination/Options
A =	Standard, $2\,1/2$ in. split leads
B =	$2\,1/2$ in. split leads with #6 spade lugs
C =	$2\,1/2$ in. split leads with #6 spade lugs and BX connector
D =	Standard male plug, quick disconnect
E =	Standard female jack, quick disconnect
F =	Miniature male plug, quick disconnect
G =	Miniature female jack, quick disconnect
H =	$1/4$ in. push-on connector

General Applications Tube and Wire

Grommet
Style 73

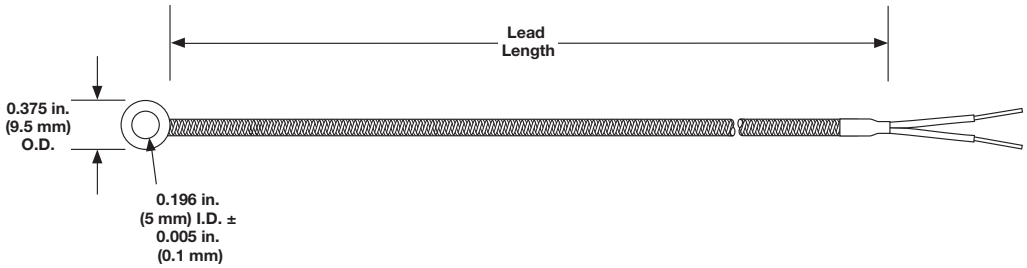

The extremely low profile of the stainless steel grommet provides fast response time.

Ordering Information

Part Number

① ② Const. Style	③ Diameter	④ Calibration	⑤ Lead Protection	⑥ Junction	⑦ Grommet Size	⑧ ⑨ ⑩ Lead Length	⑪ Term./ Options
73	X			G	A		

① ②	Construction Style
73 =	Grommet thermocouple

③	Diameter
X =	Not applicable

④	Calibration
J =	Type J
K =	Type K
T =	Type T
E =	Type E

⑤	Lead Protection
F =	Fiberglass (24 gauge solid)
T =	PFA (24 gauge solid)

⑥	Junction
G =	Grounded

⑦	Grommet Size (in.)
A =	0.195 in. I.D. x 0.375 in. O.D. x 0.035 in. thick

⑧ ⑨ ⑩	Lead Length (in.)
Available lengths: 006 to 360 in., over 360 in. contact factory	

⑪	Termination/Options
A =	Standard, 2 1/2 in. split leads
B =	2 1/2 in. split leads with #6 spade lugs
C =	2 1/2 in. split leads with #6 spade lugs and BX connector
D =	Standard male plug, quick disconnect
E =	Standard female jack, quick disconnect
F =	Miniature male plug, quick disconnect
G =	Miniature female jack, quick disconnect
H =	1/4 in. push-on connector

General Applications Tube and Wire

Brass Shim
Style 74

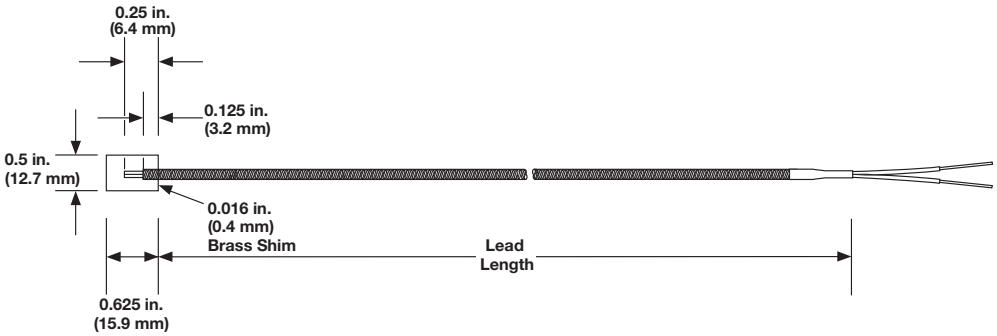

The shim stock thermocouple has a low profile and can be placed between components for surface temperature measurement.

Ordering Information

Part Number

① ② Const. Style	③ Diameter	④ Calibration	⑤ Lead Protection	⑥ Junction	⑦ Shim Size	⑧ ⑨ ⑩ Lead Length	⑪ Term./ Options
74	X			G	A		

① ②	Construction Style
74 =	Shim stock thermocouple

③	Diameter
X =	Not applicable

④	Calibration
J =	Type J
K =	Type K
T =	Type T
E =	Type E

⑤	Lead Protection
F =	Fiberglass (24 gauge solid)
T =	PFA (24 gauge solid)

⑥	Junction
G =	Grounded

⑦	Shim Size (in.)
A =	1/2 x 5/8 x 0.016 in. brass

⑧ ⑨ ⑩	Lead Length (in.)
Available lengths: 006 to 360 in., over 360 in. contact factory	

⑪	Termination/Options
A =	Standard, 2 1/2 in. split leads
B =	2 1/2 in. split leads with #6 spade lugs
C =	2 1/2 in. split leads with #6 spade lugs and BX connector
D =	Standard male plug, quick disconnect
E =	Standard female jack, quick disconnect
F =	Miniature male plug, quick disconnect
G =	Miniature female jack, quick disconnect
H =	1/4 in. push-on connector

General Applications Tube and Wire

Stainless Steel Shim
Style 75

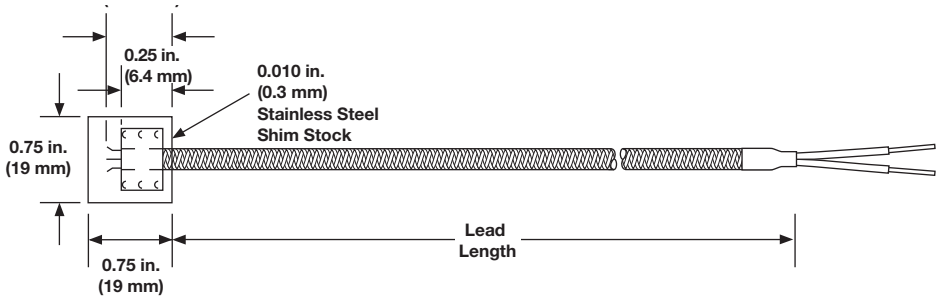

The shim stock thermocouple has a low profile and can be placed between components for surface temperature measurement.

Ordering Information

Part Number

① ② Const. Style	③ Diameter	④ Calibration	⑤ Lead Protection	⑥ Junction	⑦ Shim Size	⑧ ⑨ ⑩ Lead Length	⑪ Term./ Options
75	X			G	A		

① ②	Construction Style
75 =	Stainless steel shim stock thermocouple

③	Diameter
X =	Not applicable

④	Calibration
J =	Type J
K =	Type K

⑤	Lead Protection
F =	Fiberglass (24 gauge stranded)
S =	Fiberglass with stainless steel overbraid (24 gauge stranded)
T =	PFA (24 gauge stranded)
U =	PFA with stainless steel overbraid (24 gauge stranded)

⑥	Junction
G =	Grounded

⑦	Shim Size (in.)
A =	3/4 x 3/4 x 0.010 in., 430 SS

⑧ ⑨ ⑩	Lead Length (in.)
Available lengths: 006 to 360 in., over 360 in. contact factory	

⑪	Termination/Options
A =	Standard, 2 1/2 in. split leads
B =	2 1/2 in. split leads with #6 spade lugs
C =	2 1/2 in. split leads with #6 spade lugs and BX connector
D =	Standard male plug, quick disconnect
E =	Standard female jack, quick disconnect
F =	Miniature male plug, quick disconnect
G =	Miniature female jack, quick disconnect
H =	1/4 in. push-on connector

General Applications Tube and Wire

Polyimide Bracket Style

The polyimide thermocouple, when used with the aluminum bracket, is designed primarily to measure roller temperature. Light pressure on the roller enables the polyimide thermocouple to measure roller surface temperature without using slip rings. This type of set-up greatly reduces lag time and eliminates slip rings cost and maintenance. It can also be used to measure conveyor belt temperatures and any other moving part by riding gently on the part surface.

- Continuous use at 400°F (200°C), 500°F (260°C) for limited periods
- Low mass
- Fast response
- Totally insulated construction
- Available in Type J or K

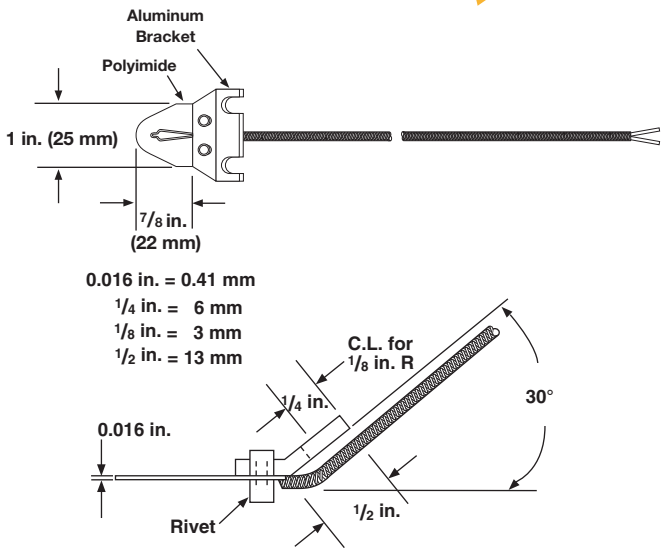

Polyimide Thermocouple with Bracket

Calibration	Lead Length in.	(cm)	Part No.
J	48	(122)	**OKJ30B4A**
	96	(244)	**OKJ30B4B**
K	48	(122)	**OKK30B2A**
	96	(244)	**OKK30B2B**

Sensors with 30 gauge solid thermocouple wire, with fiberglass insulation and split lead termination.

Low Profile Polyimide Peel and Stick Style



Low Profile Polyimide Thermocouple (without Bracket)

When used without the bracket it can be placed between heated parts for accurate temperature measurement. At the thermocouple junction, the overall thickness is only 0.016 in. (0.4 mm), so that it does not interfere with fit or thermo conductivity.

Calibration	Lead Length in.	(cm)	Part No.
J	48	(122)	**OKJ30B2A**
	96	(244)	**OKJ30B2B**
K	48	(122)	**OKK30B1A**
	96	(244)	**OKK30B1B**

Sensors with 30 gauge solid thermocouple wire, with fiberglass insulation and split lead termination.

Polyimide Peel and Stick

This sensor requires no bracket or special mounting. Simply peel away the backing and this self-adhesive film will bond to almost any surface. Temperature ratings for continuous use is 400°F (200°C).

Calibration	Lead Length in.	(cm)	Part No.
J	48	(122)	**OKJ30B11A**
	96	(244)	**OKJ30B11B**
K	48	(122)	**OKK30B10A**
	96	(244)	**OKK30B10B**
T	48	(122)	**OKT30B12A**
	96	(244)	**OKT30B12B**

Sensors with 30 gauge solid thermocouple wire, with fiberglass insulation and split lead termination.

Mineral Insulated (MI)

Watlow's mineral insulated (MI) thermocouples are fast-responding, durable and capable of handling high temperatures.

Manufactured with best-in-class XACTPAK®, Watlow's trademark for metal sheathed, mineral insulated (MI) thermocouple material, XACTPAK responds fast because the protective metal outer sheath allows use of smaller diameter thermocouple conductors. The rock hard compacted MgO insulation further enhances the sensor's ability to "read" temperature by transferring heat quickly to the measuring junction.

The XACTPAK protecting sheath and compacted insulation outperform bare wire thermocouples in most applications.

Performance Capabilities

- Easily handles temperatures up to 2200°F (1200°C)
- Meets or exceeds initial calibration tolerances per ASTM E 230

Features and Benefits

Special mineral insulation

- Protects thermocouple from moisture and thermal shock
- Permits operation in high temperature, high pressure environments

Diameters as small as 0.020 in. (0.50 mm)

- Ideal when physical space or extremely fast response are critical

Flexibility of the XACTPAK material

- Allows forming and bending of the thermocouple, without risk of cracking, to meet design requirements

Outer sheath

- Protects wires from oxidation and hostile environments

Wide range of sheath materials, diameters and calibrations

- Meet specific requirements

In-house manufacturing of XACTPAK material

- Rigid quality control procedures
- Ensures high standards are met
- Single source reliability

Custom capabilities

- Include options such as special lead lengths, lead wires and terminations



Typical Applications

- Heat treating
- Furnaces/kilns
- Turbines
- Bearing temperature
- Power stations
- Steam generators
- Diesel engines
- Nuclear reactors
- Atomic research
- Jet engines and test cells
- Rocket engines
- Semiconductor manufacturing
- Refineries/oil processing
- Catalytic reformers
- Food processing

Mineral Insulated

Bends

Diameter in.	Standard Bend Radius in.	Minimum "H" Dimension in.	Minimum "C" Dimension in.
0.063	3/16	1/2	1 1/2
0.090	1/4	3/4	1 1/2
0.125	3/8	1	2
0.188	1/2	1	2
0.250	3/4	2	2
0.313	1 1/4	2	2
0.375	1 1/2	3	2
0.500	2	4	2

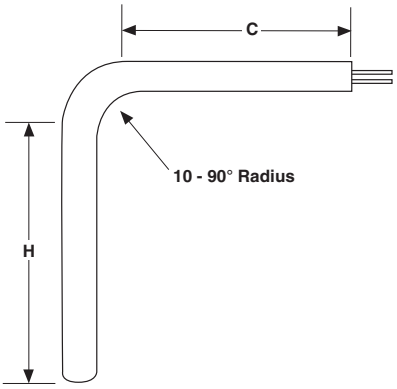

Lead Terminations

Termination	Code	Length
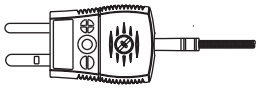 Standard Male Plug	A	—
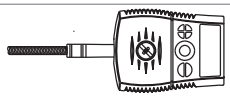 Standard Female Jack	B	—
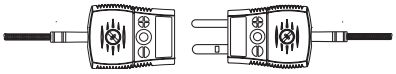 Standard Male Plug with Mating Connector	C	—
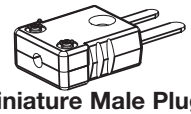 Miniature Male Plug	F	—
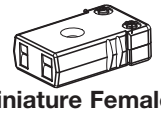 Miniature Female Jack	G	—
 Miniature Male Plug with Mating Connector	H	—
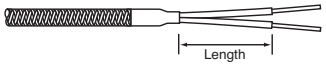 Split Leads	T	1 1/2
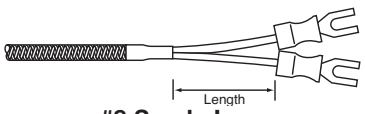 #8 Spade Lugs	U	1 1/2

Mineral Insulated

Fitting Options
Fixed Fittings

Fitting Type	Material	Sheath Size in.	NPT Thread Size in.	Hex Size in.	Length in.	Code
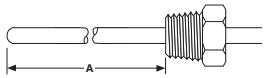 **Fixed Single Thread ⅛ NPT** Customer Specified	303 SS	0.063 to 0.250	1/8	7/16	11/16	A
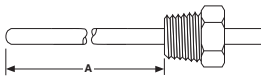 **Fixed Single Thread ¼ NPT** Customer Specified	303 SS	0.125 to 0.250	1/4	9/16	7/8	B
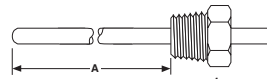 **Fixed Single Thread ½ NPT** Customer Specified	303 SS	0.125 to 0.250	1/2	7/8	1	D
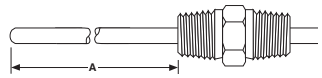 **Fixed Double Thread ½ NPT** Customer Specified	303 SS	0.125 to 0.250	1/2	7/8	1 3/4	F

Compression Fittings

Fitting Type	Material	Sheath Size in.	NPT Thread Size in.	Hex Size in.	Length in.	Code
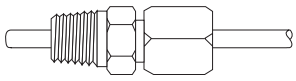 **Non-Adjustable Compression Brass**	Brass	0.125	1/8	1/2	1	J
		0.188	1/8	1/2	1 1/8	J
		0.250	1/8	1/2	1 3/16	J
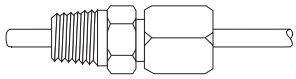 **Non-Adjustable Compression SS**	303 SS	0.063	1/8	1/2	1 1/4	L
		0.125	1/8	1/2	1 1/4	L
		0.188	1/8	1/2	1 5/16	L
		0.250	1/8	1/2	1 5/16	L
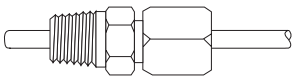 **Adjustable Compression TFE Gland**	303 SS	0.063	1/8	1/2	1 1/4	G
		0.125	1/8	1/2	1 1/4	G
		0.188	1/8	1/2	1 1/4	G
		0.250	1/4	7/8	2 7/16	X
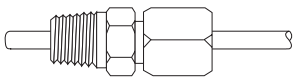 **Adjustable Compression Lava Gland**	303 SS	0.063	1/8	1/2	1 1/4	Q
		0.125	1/8	1/2	1 1/4	Q
		0.188	1/8	1/2	1 1/4	Q
		0.250	1/4	7/8	2 7/16	V

Compression Fittings: Compression fittings are shipped finger-tight on the sheath allowing field installation. Once non-adjustable fittings are deformed, they cannot be relocated. Adjustable fittings come with tetrafluorethylene (TFE) sealant or lava sealant glands.

Mineral Insulated

Fitting Options (Continued)

Adjustable Spring Loaded

Fitting Type	Material	Sheath Size in.	NPT Thread Size in.	Hex Size in.	Length in.	Code
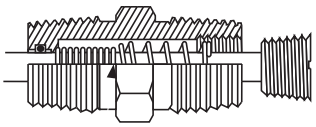	316 SS	0.250	1/2	7/8	2	H

Bayonet Lockcap and Spring

Fitting Type	Material	Sheath Size in.	Length in.	Code
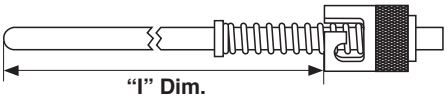	Plated Steel	0.125	1 5/8	W
	Plated Steel	0.188	1 5/8	W
	Plated Steel	0.063	1 5/8	W

Weld Pads

Weld Pad Type	Material	Code
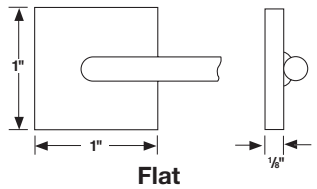 Flat	304 SS*	2
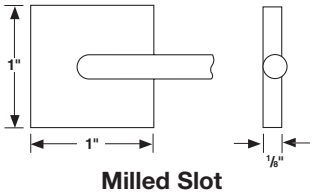 Milled Slot	304 SS	5

*Alloy 600 available on special order and recommended for use with alloy 600 sheath.

Mineral Insulated

Cut and Stripped
Style AB

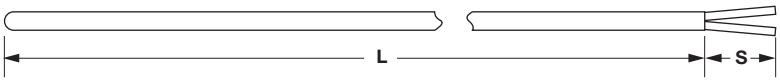

Watlow's Style AB thermocouple allows self termination of the thermocouple. Style AB is simply a section of XACTPAK material, junctioned and stripped and is the most basic of all the mineral insulated thermocouple styles.

Its XACTPAK mineral insulation construction protects the thermocouple from moisture, thermal shock, high temperatures and high pressure.

Performance Capabilities

- Maximum temperature depends on sheath material, calibration and other variables

Features and Benefits

Cold end stripped and sealed with epoxy

- Inhibits moisture penetration

Dual element style

- Allows two instruments to run from the same element, reducing costs

Ordering Information

Part Number

①	②	③ Sheath O.D.	④ Special Options	⑤ Fittings, Weld Pads	⑥	⑦ Sheath Material	⑧ ⑨ Sheath Length "L" (whole in.)	⑩ Sheath Length "L" (fract. in.)	⑪ Junction	⑫ Calibration	⑬ Strip Length "S" (whole in.)	⑭ Strip Length "S" (fract. in.)	⑮
A	B				0								0

③	Sheath O.D. (in.)
B =	0.020
C =	0.032
D =	0.040
E =	0.063
G =	0.125
H =	0.188
J =	0.250

④	Special Options
0 =	No spring loaded and extension leads
1 =	Extension leads only
2 =	Spring loading hardware with extension leads

⑤	Fittings, Weld Pads
0 =	None
Notes: If required, enter code from pages 47 to 48. If none, enter "0." Weld pads only available for 0.063 in. diameter and larger.	

⑦	Sheath Material
A =	304/304L SS
C =	304/304L SS with Teflon® encapsulation
E =	316/316L SS with Teflon® encapsulation
F =	316/316L SS
Q =	Alloy 600 (Type K)

⑧ ⑨	Sheath Length "L" (whole in.)
Available lengths: 01 to 99, for lengths over 99 inches contact factory	

⑩	Sheath Length (fractional in.)
0 =	0
4 =	1/2

⑪	Junction		
	Grounded	Ungrounded	Exposed
Single	G	U	E
Dual*	H	W (isolated)	D (isolated)
*Only available for 0.063 diameter in alloy 600.			

⑫	Calibration			
	E	J	K	T
Standard limits	E	J	K	T
Special limits	2	3	4	8

⑬	Strip Length "S" (whole in.)
0, 1, 2 and 3 - 1 in. max. on 0.040 and smaller	

⑭	Strip Length "S" (fractional in.)
0 =	0
1 =	1/8
2 =	1/4
3 =	3/8
4 =	1/2
5 =	5/8
6 =	3/4
7 =	7/8

Mineral Insulated

Mini Plug or Jack Termination
Style AC

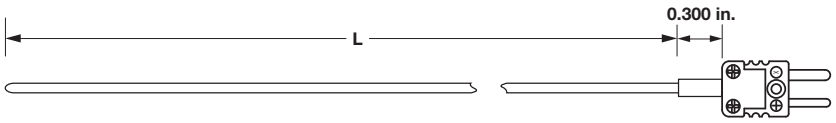

Ordering Information

Part Number

①	②	③ Sheath O.D.	④ Connector Type	⑤ Fittings, Weld Pads	⑥	⑦ Sheath Material	⑧ ⑨ Sheath Length "L" (whole in.)	⑩ Sheath Length "L" (fract. in.)	⑪ Junction	⑫ Calibration	⑬ ⑭	⑮
A	C				0						00	0

③ Sheath O.D. (in.)	
B =	0.020
C =	0.032
D =	0.040
E =	0.063
G =	0.125

④ Connector Type	
F =	Miniature plug
G =	Miniature jack
H =	Miniature plug with mating connector

Note: Miniature plugs and jacks 400°F (200°C) (0.125 in. max. O.D.).

⑤ Fittings, Weld Pads	
0 =	None

Notes: If required, enter code from pages 47 to 48. If none, enter "0." Weld pads only available for 0.063 in. and 0.125 in. diameters.

⑦ Sheath Material	
A =	304/304L SS
C =	PFA coated over 304/304L SS (available on G diameter)
E =	316/316L SS with Teflon® encapsulation
F =	316/316L SS
Q =	Alloy 600 (Type K)

⑧ ⑨ Sheath Length "L" (whole in.)

Available lengths: 01 to 99, for lengths over 99 inches contact factory. Maximum length for PFA coating is 48 in.

⑩ Sheath Length "L" (fractional in.)	
0 =	0
4 =	½

⑪ Junction			
	Grounded	Ungrounded	Exposed
Single	G	U	E

⑫ Calibration				
	E	J	K	T
Standard limits	E	J	K	T
Special limits	2	3	4	8

Mineral Insulated

Standard Plug or Jack Termination
Style AC

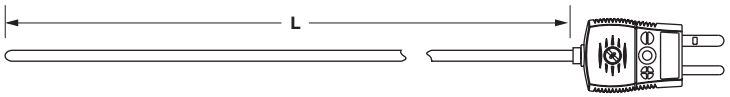

Ordering Information

Part Number

①	②	③ Sheath O.D.	④ Connector Type	⑤ Fittings, Weld Pads	⑥	⑦ Sheath Material	⑧ ⑨ Sheath Length "L" (whole in.)	⑩ Sheath Length "L" (fract. in.)	⑪ Junction	⑫ Calibration	⑬ ⑭	⑮
A	C				0						00	0

③ Sheath O.D. (in.)	
D =	0.040
E =	0.063
G =	0.125
H =	0.188
J =	0.250

④ Connector Type	
A =	Standard plug
B =	Standard jack
C =	Standard plug with mating connector
Note: Standard plug and jacks 425°F (218°C).	

⑤ Fittings, Weld Pads	
0 =	None
Notes: Standard plug and jacks 425°F (218°C). Weld pads only available for 0.063 in. diameter and larger.	

⑦ Sheath Material	
A =	304/304L SS
F =	316/316L SS
C =	PFA coated over 304/304L SS (available on G, H, J diameters)
E =	316/316L SS with Teflon® encapsulation
Q =	Alloy 600 (Type K)

⑧ ⑨ Sheath Length "L" (whole in.)
Available lengths: 01 to 99, for lengths over 99 inches contact factory. Maximum length for PFA coating is 48 in.

⑩ Sheath Length "L" (fractional in.)	
0 =	0
4 =	1/2

⑪ Junction			
	Grounded	**Ungrounded**	**Exposed**
Single	G	U	E
Dual*	H	W (isolated)	D (isolated)
* Only available for 0.063 in. diameter and larger.			

⑫ Calibration				
	E	**J**	**K**	**T**
Standard limits	E	J	K	T
Special limits	2	3	4	8

Mineral Insulated

Metal Transitions with Spring Strain Relief Style AF

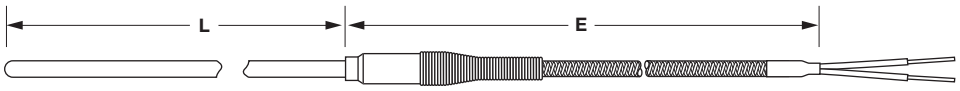

Ordering Information

Part Number

①	②	③	④	⑤	⑥	⑦	⑧ ⑨	⑩	⑪	⑫	⑬ ⑭	⑮
	Style	Sheath O.D.	Lead Wire Const.	Fittings, Weld Pads	Lead Wire Term.	Sheath Material	Sheath Length "L" (whole in.)	Sheath Length "L" (fract. in.)	Junction	Calibration	Lead Wire Length "E" (whole ft)	Special Rqmts.
A	F											

② Style	
F =	Metal transition with strain relief and 300°F (149°C)

③ Sheath O.D. (in.)	
B =	0.020
C =	0.032
D =	0.040
E =	0.063
G =	0.125
H =	0.188
J =	0.250

④ Lead Wire Construction				
		Standard	Overbraid	Flex Armor
Fiberglass	Solid	A	J	R
FEP	Solid	C	L	T
Fiberglass	Stranded*	B	K	S
FEP	Stranded*	D	M	U

*Stranded lead wire available only for sheath O.D. 0.063 in. and larger.

⑤ Fittings, Weld Pads	
0 =	None

Notes: If required, enter code from pages 47 to 48. If none, enter "0."
Weld pads available for 0.063 in. and larger.

⑥ Lead Wire Termination	
A =	Standard male plug
B =	Standard female jack
C =	Standard plug with mating connector
F =	Miniature male plug
G =	Miniature female jack
H =	Miniature plug with mating connector
T =	Standard, 1 1/2 in. split leads
U =	1 1/2 in. split leads with #8 spade lugs

⑦ Sheath Material	
A =	304/304L SS
F =	316/316L SS
C =	PFA coated over 304/304L SS (available on G, H and J diameter)
E =	316/316L SS with Teflon® encapsulation
Q =	Alloy 600 (Type K)

⑧ ⑨ Sheath Length "L" (whole in.)
Available lengths: 01 to 99, for lengths over 99 inches contact factory. Maximum length for PFA coating is 48 in.

⑩ Sheath Length "L" (fractional in.)	
0 =	0
4 =	1/2

⑪ Junction			
	Grounded	Ungrounded	Exposed
Single	G	U	E
Dual*	H	W (isolated)	D (isolated)

*Only available for 0.063 in. diameter and larger.

⑫ Calibration				
	E	J	K	T
Standard limits	E	J	K	T
Special limits	2	3	4	8

⑬ ⑭ Lead Wire Length "E" (whole feet)
Available lengths: 01 to 30, for lengths over 30 contact factory

⑮ Special Requirements	
0 =	Standard 300°F (149°C)
H =	High temperature 1000°F (538°C) potting
M =	500°F (260°C)

Mineral Insulated

Miniature Transitions
Style AQ

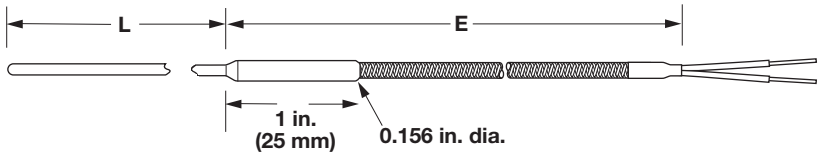

Note: 300°F (149°C) potting standard

Ordering Information

Part Number

①	②	③	④	⑤	⑥	⑦	⑧ ⑨	⑩	⑪	⑫	⑬ ⑭	⑮
	Style	Sheath O.D.	Lead Wire Const.		Lead Wire Term.	Sheath Material	Sheath Length "L" (whole in.)	Sheath Length "L" (fract. in.)	Junction	Calibration	Lead Wire Length "E" (whole ft)	Special Rqmts.
A	Q			0								

② Style	
Q =	Miniature metal transition with 300°F (149°C)

③ Sheath O.D. (in.)	
B =	0.020
C =	0.032
D =	0.040
E =	0.063

④ Lead Wire Construction	
A =	Fiberglass solid - 30 gauge
B =	Fiberglass solid - 24 gauge
C =	FEP solid - 30 gauge
D =	FEP solid - 24 gauge

⑥ Lead Wire Termination	
A =	Standard male plug
B =	Standard female jack
C =	Standard plug with mating connector
F =	Miniature male plug
G =	Miniature female jack
H =	Miniature plug with mating connector
T =	Standard, 1 1/2 in. split leads
U =	1 1/2 in. split leads with #8 spade lugs

⑦ Sheath Material	
A =	304/304L SS
F =	316/316L SS
Q =	Alloy 600 (Type K)

⑧ ⑨ Sheath Length "L" (whole in.)
Available lengths: 01 to 99, for lengths over 99 inches contact factory

⑩ Sheath Length "L" (fractional in.)	
0 =	0
4 =	1/2

⑪ Junction			
	Grounded	Ungrounded	Exposed
Single	G	U	E

⑫ Calibration		
	J	K
Standard limits	J	K
Special limits	3	4

⑬ ⑭ Lead Wire Length "E" (whole feet)
Available lengths: 01 to 30

⑮ Special Requirements	
0 =	Standard 300°F (149°C)
M =	500°F (260°C) potting

Mineral Insulated

Connection Head
Style AR

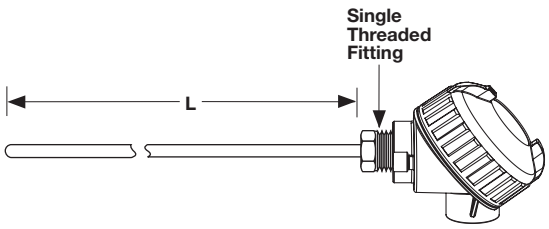

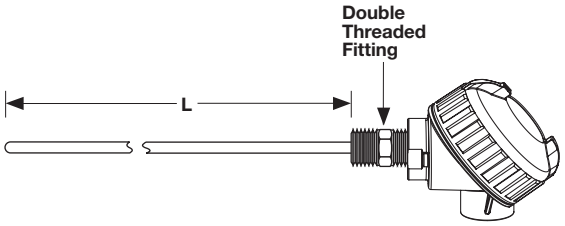

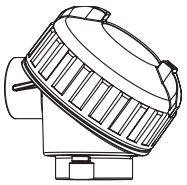

Type D (Small Cast Iron) or
E (Small Aluminum)

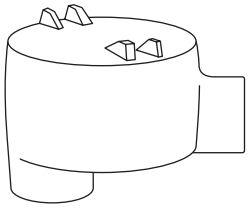

Type H (Explosion Proof)

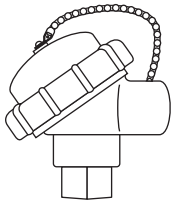

Type C (Polypropylene)

Ordering Information

Part Number

①	②	③ Sheath O.D. (in.)	④ Connection Head	⑤ Head Mounting Fittings	⑥	⑦ Sheath Material	⑧ ⑨ Sheath Length "L" (whole in.)	⑩ Sheath Length "L" (fract. in.)	⑪ Junction	⑫ Calibration	⑬ ⑭	⑮
A	R				0						00	0

③	Sheath O.D. (in.)
G =	0.125
H =	0.188
J =	0.250

④	Connection Head
C =	Polypropylene
D =	Small cast iron
E =	Small aluminum
H =	Explosion proof
U =	E head with 5750 transmitter*
V =	C head with 5750 transmitter*
W =	H head with 5750 transmitter*
* For units with a transmitter, the order must specify a temperature range and °F or °C.	

⑤	Head Mounting Fittings
0 =	Single threaded 303 SS
F =	Double threaded 303 SS 1/2 in. NPT
H* =	Spring loaded double threaded 316 SS 1/2 in. NPT
*0.250 in. diameter only	

⑦	Sheath Material
A =	304/304L SS
F =	316/316L SS
Q =	Alloy 600 (Type K)

⑧ ⑨	Sheath Length "L" (whole in.)
Available lengths: 01 to 99, for lengths over 99 inches contact factory	

⑩	Sheath Length "L" (fractional in.)
0 =	0
1 =	1/8
2 =	1/4
3 =	3/8
4 =	1/2
5 =	5/8
6 =	3/4
7 =	7/8

⑪ Junction	Grounded	Ungrounded	Exposed
Single	G	U	E
Dual	H	W (isolated)	D (isolated)

⑫ Calibration	E	J	K	T
Standard limits	E	J	K	T
Special limits	2	3	4	8

Mineral Insulated

For Use With Thermowells
Style AT

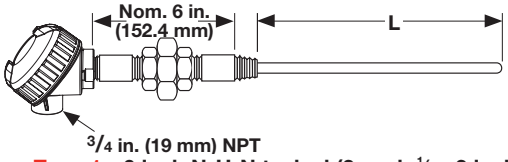

Type 1 - 6 inch N-U-N typical (2 each ½ x 3 inch steel pipe nipples and 1 each malleable union)

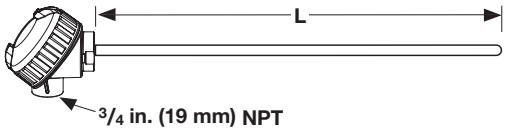

Type 4 - Connection Head Only with ½ inch NPT process connection

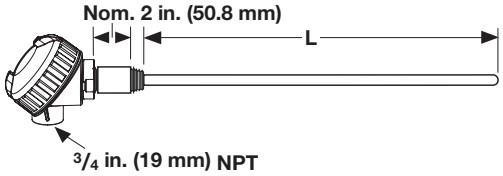

Type 3 - ½ x 3 inch steel pipe nipple typical

Ordering Information

Part Number

①	②	③ Sheath O.D. (in.)	④ Connection Head	⑤ Cold End Config.	⑥	⑦ Sheath Material	⑧ ⑨ Sheath Length "L" (whole in.)	⑩ Sheath Length "L" (fract. in.)	⑪ Junction	⑫ Calibration	⑬	⑭ Spring-Loading	⑮
A	T	J			0						0		0

③ Sheath O.D. (in.)	
J =	0.250

④ Connection Head	
C =	Polypropylene (1/2 in. NPT thermocouple opening only)
D =	Small cast iron
E =	Small aluminum
H =	Explosion proof (1/2 in. NPT and 3/4 in. NPT thermocouple opening only)

⑤ Cold End Configuration	
1 =	Type 1, 6 in. nipple-union-nipple
3 =	Type 3, 3 in. nipple
4 =	Type 4, no extensions
Note: Steel nipple and unions are standard.	

⑦ Sheath Material	
A =	304/304L SS
F =	316/316L SS
Q =	Alloy 600 (Type K)

⑧ ⑨ Sheath Length "L" (whole in.)
Available lengths: 01 to 99, for lengths over 99 inches contact factory

Note: For a complete sensor, add thermowell part number to the 15-digit AT part number. For sheath length, use "AR" (as required) and the factory will determine correct length.

⑩ Sheath Length "L" (fractional in.)	
0 =	0
1 =	1/8
2 =	1/4
3 =	3/8
4 =	1/2
5 =	5/8
6 =	3/4
7 =	7/8

⑪ Junction		
	Grounded	Ungrounded
Single	G	U
Dual	H	W (isolated)

⑫ Calibration				
	E	J	K	T
Standard limits	E	J	K	T
Special limits	2	3	4	8

⑭ Spring-Loading	
Y =	Yes
N =	No

EXACTSENSE®

The EXACTSENSE® thermocouple from Watlow provides the accuracy, time response and durability required to help manufacturers improve the control of their diesel engine aftertreatment systems. The resulting benefits include more efficient regeneration, better fuel economy and improved emissions to meet the more stringent global requirements.

The EXACTSENSE thermocouple features integrated electronics within a molded connector housing. The electronics convert the thermocouple signal into either an analog or digital output signal that is compatible with the engine control module (ECM). Having a sensor with integrated electronics helps improve overall system accuracy and enables the use of information about the sensor such as part number, serial number, date of manufacture, time response, calibration, drift and more to enhance system performance or improve diagnostic capabilities.

The EXACTSENSE thermocouple includes WATCOUPLE™ sensing technology. This technology uses materials selected for their stability and longevity at high temperatures making this thermocouple an ideal choice for burner, flame and turbo applications. The durable mineral insulated thermocouple construction is also superior for applications requiring long immersion depths up to 7.9 in. (200 mm). The EXACTSENSE is point sensitive unlike RTDs, which average the temperature over the length of the element. These EXACTSENSE features provide the ability to accurately measure the temperature near the center of larger pipes without complex algorithms.

The mineral insulated construction also enables the tip to be tapered. This durable closed tip construction results in faster response times than competing sensor technologies can achieve with their less durable open tip constructions. EXACTSENSE tapered construction results in improved control and increased sensor life.

The EXACTSENSE thermocouple meets the demanding requirements for over-the-road medium and heavy-duty vehicles as well as on off-road equipment including construction, mining, agriculture, marine and locomotive. The EXACTSENSE thermocouple is available with a variety of standard options to meet specific manufacturer requirements.



Features and Benefits

Integrated electronics

- Provide high system accuracy resulting in improved fuel economy
- Enable the availability of information for system performance monitoring and improved diagnostic capability
- Allow a variety of output signals compatible with ECMs

WATCOUPLE thermocouple technology

- Provides reliability in rugged environments
- Operates at a wide range of temperatures
- Maximizes stability at high temperatures
- Provides longer sensor life

Tapered tip construction

- Provides faster response time
- Increases life of sensors due to closed tip construction

Long immersion depth

- Improves detection of actual process temperatures

Typical Applications

- Diesel particulate filter (DPF)
- Diesel oxidation catalyst (DOC)
- Selective catalytic reduction (SCR)
- Exhaust gas recirculation (EGR)
- Lean NOx trap (LNT)
- Turbocharger
- Burner
- Reformer

EXACTSENSE

Specifications

Sensor Type
- Mineral insulated thermocouple

Output Options
- Analog 0 – 5V ratiometric analog voltage signal (RAVS)
- Analog 0 – 5V non-ratiometric analog voltage signal (AVS)
- LIN 2.1 or 1.3 compatible
- CAN J1939

Analog Supply Voltage (Vs1)
- 5V ± 0.25VDC

LIN Supply Voltage (Vs2)
- 9 to 17VDC

CAN Supply Voltage
- 6 to 16VDC

LIN Output Communication Speed
- 9600, 19200 baud rate
- LIN 2.1 or 1.3 compatible

CAN Output Communication Speed
- 250,000, 500,000 baud rate

Operating Temperature Range of Sensor
- -40 to 1382°F (-40 to 750°C) (stainless)
- -40 to 1832°F (-40 to 1000°C) (alloy 600)
- -40 to 2012°F (-40 to 1100°C) (Haynes® 230)

Analog Accuracy with Electronics
- ±18°F (±10°C) from -40 to 932°F (-40 to 500°C)
- ±22.5°F (±12.5°C) from 932 to 1832°F (500 to 1000°C)

LIN Accuracy with Electronics
- ±14.4°F (±8°C) from -40 to 2012°F (-40 to 1100°C)

CAN Accuracy with Electronics
- 12.6°F (±7°C) from -40 to 1112°F (-40 to 600°C)

Response Time (T63) 0.08 in. (2.1 mm) Tip
- ~3 seconds in air moving at 70 meters/second

Response Time (T63) 0.16 in. (4.0 mm) Tip
- ~7 seconds in air moving at 70 meters/second

Immersion Depth (A Dimension)
- 0.98 to 7.87 in. (25 to 200 mm)

Operating Temperature Range of Electronics and Connector
- -40 to 248°F (-40 to 120ºC)

Operating Temperature Range of Sensor to Wire Interface
- -40 to 392°F (-40 to 200ºC)

Electromagnetic Interference (EMI), Radio Control Frequency (RFI)
- 100V/meter 20MHz to 2GHz

Materials and Mounting

Sheath Materials
- 316 SS, alloy 600 or Haynes® 230

Mounting Fittings
- M12x1.5-6g, M14x1.5-6g and M16x1.5-6g, 400 SS

Lead Wire
- 0.96 mm^2 (18 AWG - 19 strands of 30 AWG) stranded wire with Tefzel® insulation

Protective Sleeve
- 392°F (200°C) silicone coated fiberglass sleeve (optional)

Connector
- Tyco Electronics 776488-1 (AMPSEAL 16 SERIES) with 2 rows of 2 gold plated pins
- Mating connector: Tyco plug 776487-1, Tyco S&F gold plated socket 776492-1, Tyco plug seal 776363-1

EXACTSENSE

Dimensional Drawings

Bent Probe (90°)

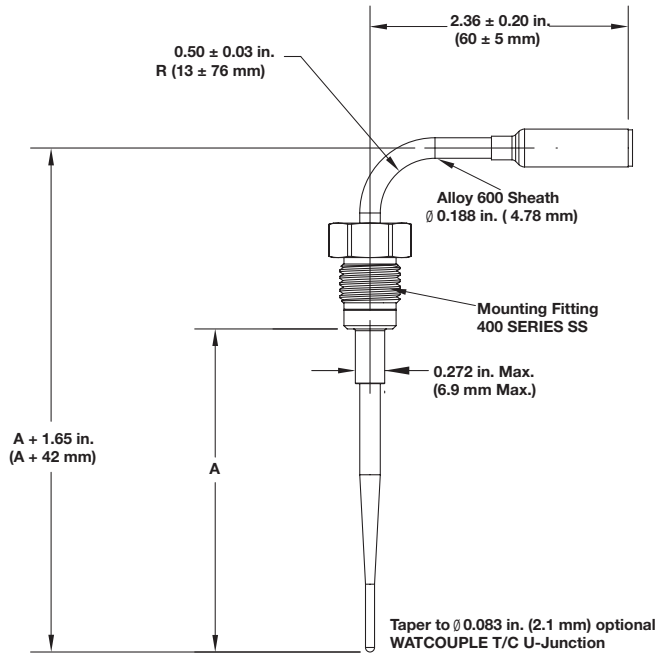

Straight Probe

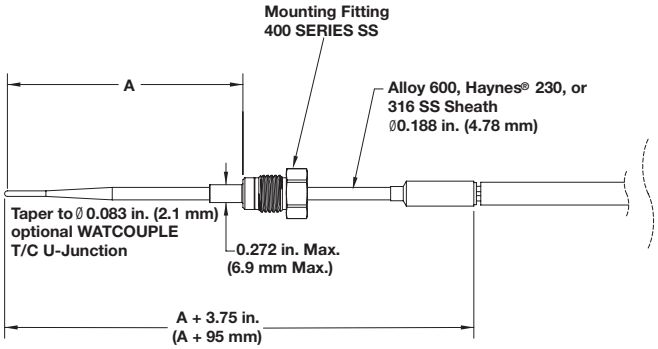

Assembly (Shown with Three Inputs)

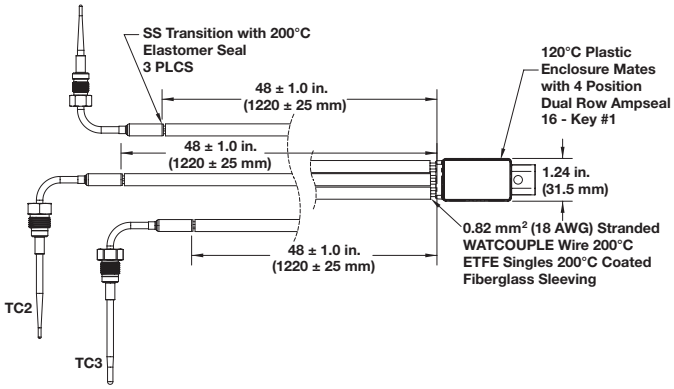

Electronic Housing

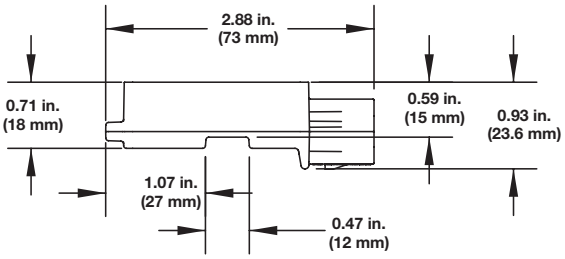

MICROCOIL™

Accurate, Repeatable, Fast Response in Perpendicular Surface Measurement

Watlow's MICROCOIL™ miniature thermocouple provides surface temperature measurements that deliver an unparalleled degree of accuracy. This patented technology achieves critical isothermal surface temperature measurement and offers superior design flexibility.

Typical sensor-to-sensor repeatability of one to 2% (DT) can be achieved with the MICROCOIL because sensor areas that are vulnerable to normal production variances are not inside of the thermal gradient. Weld location, insulation thickness and welded tip thickness no longer impact measurement in an isothermal environment. Therefore, the inherent challenges of measuring surface temperatures no longer exist.

The MICROCOIL thermocouple utilizes Watlow's XACTPAK® mineral insulated thermocouple cable. When used with an ungrounded junction, the sensor is electrically isolated from the surface being measured. For higher voltage applications, the aluminum nitride sensor disc option can be used for additional protection.

The helix design of the MICROCOIL thermocouple elicits a faster response time because the surface temperature conducts only through the diameter of the cable and the width of the sensor disk.

Thermal analysis demonstrates the superior performance of the MICROCOIL technology. This patented process achieves critical isothermal area for a long length of a very small cable, ensuring accurate and repeatable measurement.

Standard straight sensors experience poor accuracy of response time, non-repeatable results as well as errors ranging from 20 to 30 percent and higher.

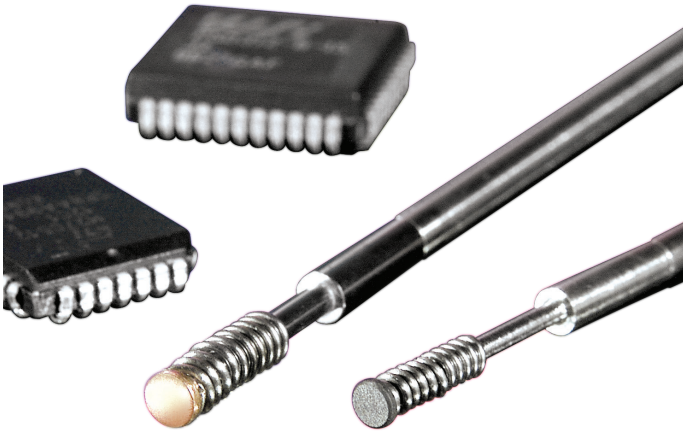

Features and Benefits

Miniature size

- Allows for precision measurement in tight spaces

XACTPAK mineral insulated thermocouple cable

- Electronically isolated and shielded 1292°F (700°C) maximum continuous temperature
- Offers exact measurement for demanding applications

Self leveling and loading

- Provides superior repeatability of measurement for a wide variety of surfaces

Typical Applications

- Environmental chambers
- Chip cases
- Heat sinks
- Packaging
- Platens

MICROCOIL

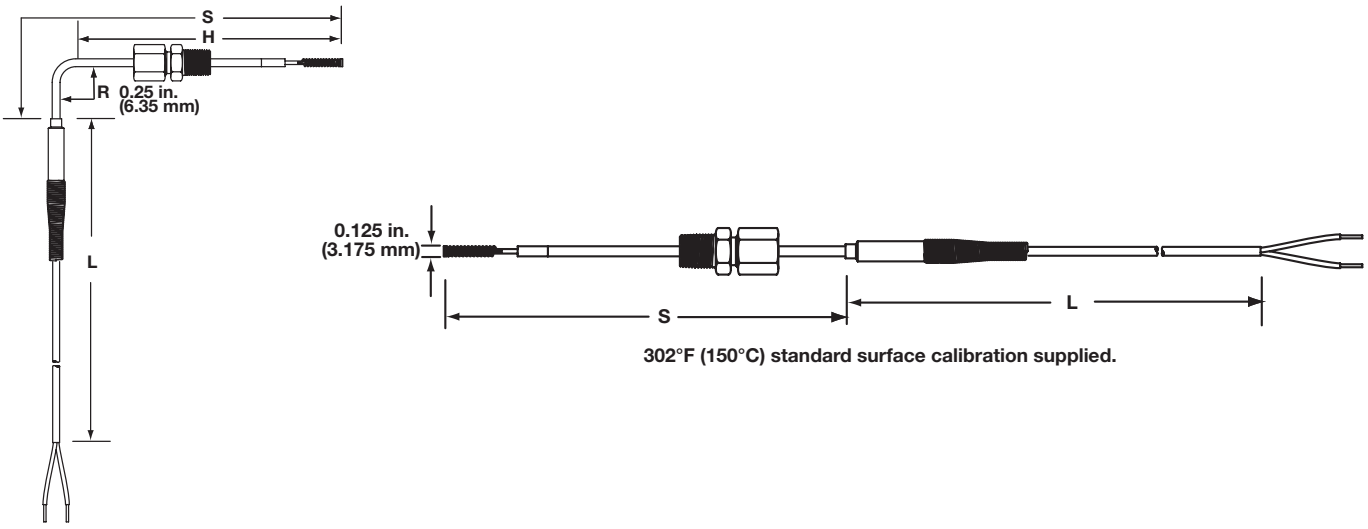

302°F (150°C) standard surface calibration supplied.

Ordering Information

Part Number

① ②	③	④	⑤ ⑥	⑦	⑧	⑨	⑩ ⑪	⑫
MC	Temp. Rating	Junction Type	Sheath Length "S"	Hot Leg Length "H"	Fitting, Optional	Lead Length Const.	Lead Length "L"	Lead Wire Term.

Type K Calibration, 0.020 inch diameter Alloy 718 thermocouple sheath, 0.125 inch coil diameter, 12.5 oz approx. spring force for 0.0500 inch compression.

③	Temperature Rating
C =	Copper tip 662°F (350°C) max.
N =	Aluminum nitride 1292°F (700°C) max.

④	Junction Type
G =	Grounded single junction
U =	Ungrounded single junction

⑤ ⑥	Sheath Length "S"
XX =	02 to 18 in.

⑦	Hot Leg Length "H", if 90° bend (in.)
0 =	N/A, straight length
A =	1.125
D =	1.500
H =	2.000
M =	2.500
S =	3.000

Notes: Bend radius is 0.25 in.
Cold leg length (1 inch min.) = S - H - 0.4 inch
If a fitting is ordered, it will be installed hand tightened onto the hot leg.
If a fitting is ordered, the min. hot leg length "H" is 2.500 in.

⑧	Fitting, Optional
0 =	None
C =	Compression fitting, adjustable, 1/8 in. NPT, TFE gland

⑨	Lead Length Construction, Solid Conductors
1 =	24 gauge fiberglass
2 =	26 gauge FEP with shield and drain not attached
5 =	24 gauge FEP with stainless steel overbraid

⑩ ⑪	Lead Length "L"
XX =	03 to 99 in.

⑫	Lead Wire Terminations
A =	Standard male plug
B =	Standard female jack
C =	Standard plug with mating connector
F =	Miniature male plug
G =	Miniature female jack
H =	Miniature plug with mating connector
T =	Standard, 1.5 in. split leads
U =	1.5 in. split leads with spade lugs

Radio Frequency

Watlow's TR thermocouple probe is designed for use in plasma generation applications to ensure accurate temperature readings through radio or conduction environments where traditional sensors are ineffective. Radio frequency energy can cause serious temperature measurement errors when exposed to these types of environments.

The TR probe is constructed using a unique combination of high performance materials. The sensor tip is made from high thermal conductivity materials to provide a quick response time. High dielectric insulation electrically insulates the sensor from capacitive coupling. Lead wires are twisted to improve common mode rejection and reduce induced EMI (electromagnetic interference).

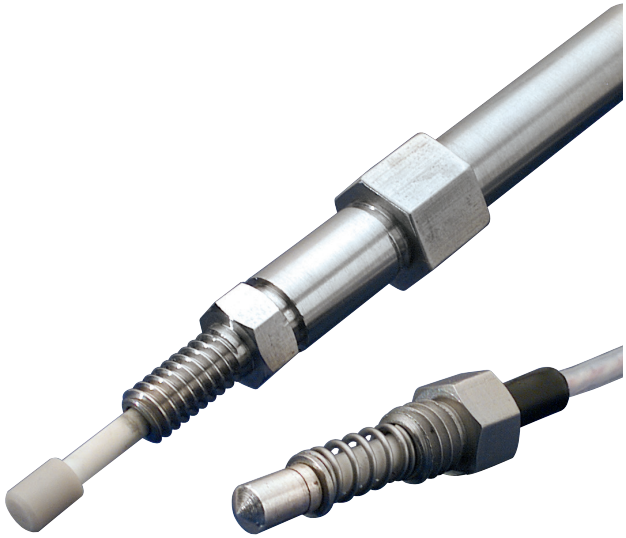

Features and Benefits

3000VDC dielectric rating

- Allows thermocouple to be used in platens with dc bias

High thermal conductivity design

- Ensures accurate, repeatable measurements

High CMMR lead wire design

- Reduces induced error from EMI

Options

- Type K calibration
- 0.875 in. (22.23 mm) to 1.5 in. (3 mm) immersion depths
- $^{5}/_{16}$ - 18 or M8 threaded fitting
- 500°F (260°C) or 932°F (500°C) rated constructions

Radio Frequency

TR Thermocouple

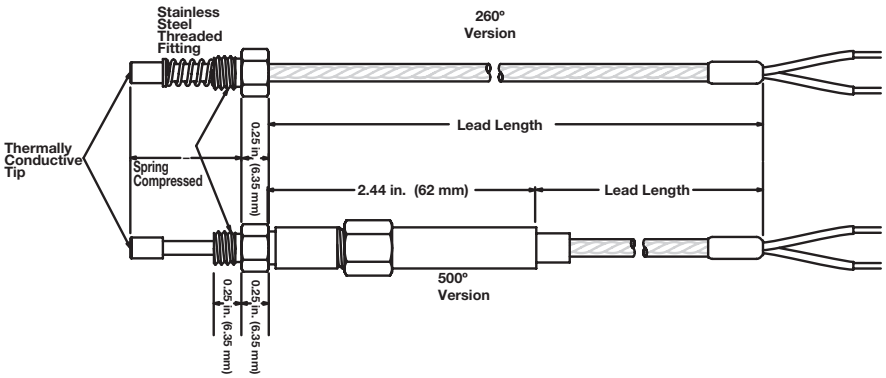

Platen Modification Detail

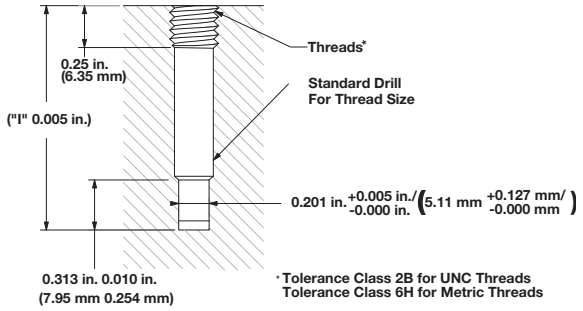

Tip Shape

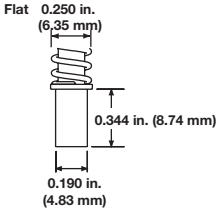

Ordering Information

Part Number

① ②	③	④	⑤ ⑥	⑦	⑧	⑨	⑩ ⑪	⑫
TR	Max. Temp.	Tip Shape	Imm. Depth "I"	Threaded Fitting Size	Junction Type	Calibration	Lead Length "L"	Lead Wire Term.

③	Maximum Temperature
C =	260°C silver-plated copper tip
N =	500°C aluminum nitride tip (AIN)

④	Tip Shape
F =	Flat

⑤ ⑥	Immersion Depth "I" (in.)
From Tip to top of threads, spring compressed	
08 =	0.875
10 =	1.000
11 =	1.125
12 =	1.250
13 =	1.375
15 =	1.500

⑦	Threaded Fitting Size
5 =	5/16-18 UNC-2A
8 =	M8 x 1.25-6g

⑧	Junction Type
U =	Ungrounded single

⑨	Calibration
K =	Special limits K (±1.1°C or ±0.4%)

⑩ ⑪	Lead Length "L"
XX =	12 to 48 in.

⑫	Lead Wire Terminations
A =	Standard male plug
B =	Standard female jack
C =	Standard plug with mating connector
F =	Miniature male plug
G =	Miniature female jack
H =	Miniature plug with mating connector
T =	Standard, 1.5 in. split leads
U =	1.5 in. split leads with spade lugs

TRUE SURFACE (TST)

Increase Surface Temperature Accuracy with Improved Thermocouple Design

Watlow's TRUE SURFACE thermocouple (TST) offers superior accuracy for measuring flat surface temperatures. This compact, highly accurate sensor isolates the thermocouple junction from ambient airflow. The TST typically achieves accuracy and repeatability between one to two percent (ΔT).

The TST, with its removable molded cover, fits into corners and other tight locations. TSTs are easy to install with a variety of commonly used screw types.

Watlow's TST sensor is ideal for many applications including semiconductor chambers, platens, packaging, cleaning and food preparation.

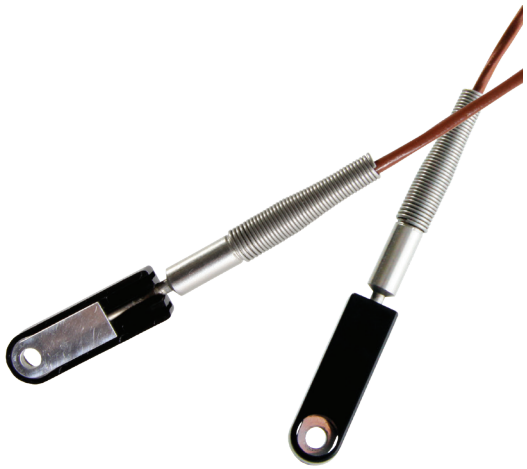

Features and Benefits

Isothermal measuring junction

- Offers excellent thermal conductivity for the measuring junction

Molded insulator

- Isolates the isothermal measuring block from ambient airflow

Compact, universal package

- Fits into corners and other tight locations easily (0.44 in. (11.88 mm) side by 0.24 in. (6.10 mm) high)
- Molded insulator is removable for applications where an even smaller package is needed

Temperature rating of 400°F (200°C)

- Offers superior application flexibility for a wide variety of surfaces

Options

- Ungrounded or grounded junction(s)
- Type J or K calibrations
- Shielded lead wire with drain, either isolated from or connected to the sensor sheath

Steady State Temperature Measurement Test

- **Purpose:** To determine and compare the steady state error of the Watlow TST and a common "washer"-style thermocouple at several temperature settings with and without ambient airflow.
- **Test Description:** Each sensor was attached to a brass hot plate and allowed to reach equilibrium before temperature readings were taken. Room temperature air was then blown onto the hot plate and the sensors. Temperature readings were taken after the system reached the new equilibrium point. The test was performed with a 20, 40, 60 and 80°C differential between the hot plate temperature and ambient.
- **Results:** Ambient temperature = 25°C.

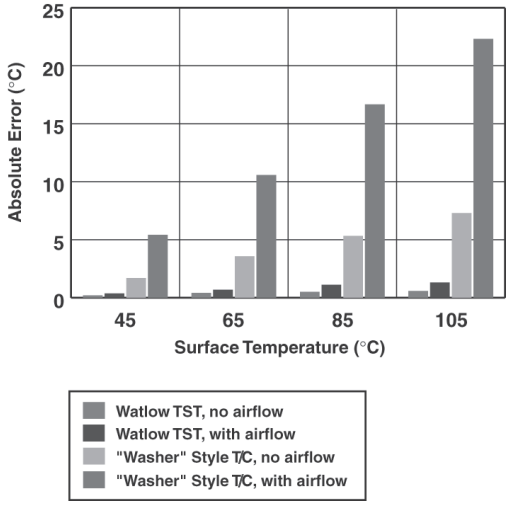

TRUE SURFACE (TST)

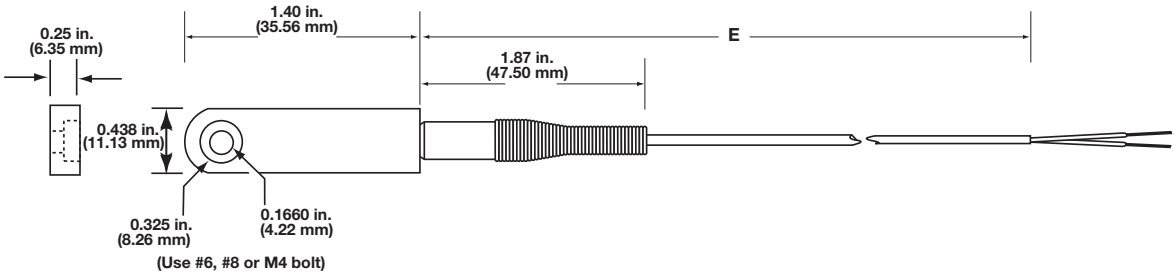

Ordering Information

Part Number

① ② ③	④ Lead Wire Const.	⑤ Lead Wire Term.	⑥ Junction Type	⑦ Calibration	⑧ ⑨ Lead Length "E"
TST					

④	Lead Wire Construction
2 =	FEP 26 gauge solid
3 =	FEP 26 gauge solid with shield and ground, not continuous to sheath (Terminations A, B and C are not available with this lead wire construction).

⑤	Lead Wire Terminations
A =	Standard male plug
B =	Standard female jack
C =	Standard plug with mating connector
F =	Miniature male plug
G =	Miniature female jack
H =	Miniature plug with mating connector
T =	Standard, 1.5 in. split leads
U =	1.5 in. split leads with spade lugs

⑥ Junction Type	Grounded	Ungrounded
Single	G	U

⑦ Calibration	J	K
Standard limits	J	K
Special limits	3	4

⑧ ⑨ Lead Length "E"
01 to 99 feet

Multipoints

Temperature variances exist in all systems, regardless of materials, working fluid or system design. There is not a process that involves heating a particular medium where temperature of that medium is consistent throughout—temperature gradients always exist. Sensing temperature at a single location during a process is acceptable for many applications because temperature gradients are often insignificant. However, there is a need for many applications to monitor temperature in multiple locations to ensure a safe, accurate and cost efficient process. Installing multiple, independent temperature sensors may be impractical due to cost or space limitations.

Multipoint temperature sensors accurately measure temperatures at various locations along the sensor's length. They are used across a broad range of processes and installations—predominately in applications involving a large or complex process where close temperature control is necessary.

Multipoint temperature sensors are designed to meet requirements of specific applications that include temperature, pressure, chemical environments, time response and number of points required. Sensors are constructed from a variety of protecting tube materials that use XACTPAK mineral insulated, metal-sheathed cable. Multipoint temperature sensors are available in standard or special ASTM thermocouple calibration tolerances. For applications requiring extreme accuracy, special constructions can be made with platinum resistance temperature detectors (RTDs).

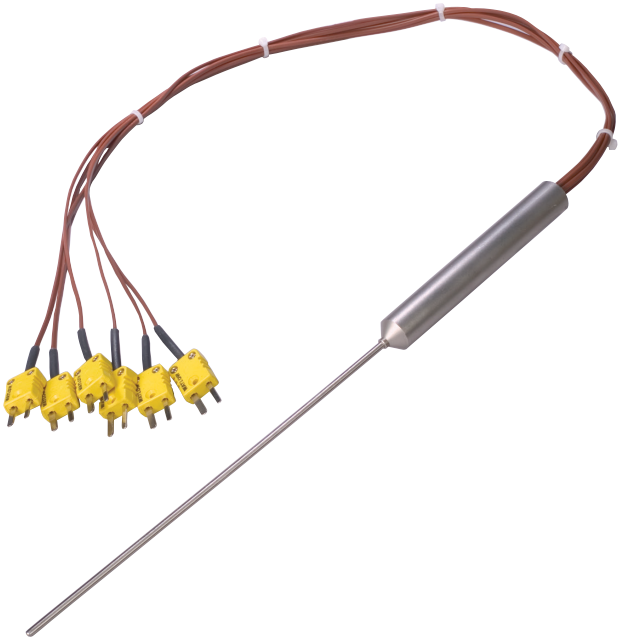

Typical Applications

- Chemical processing
- Petroleum distillation towers
- Semiconductor manufacturing
- Profiles of furnaces and kilns
- Combustion research
- Storage tanks
- Air flow ducts

Multipoints

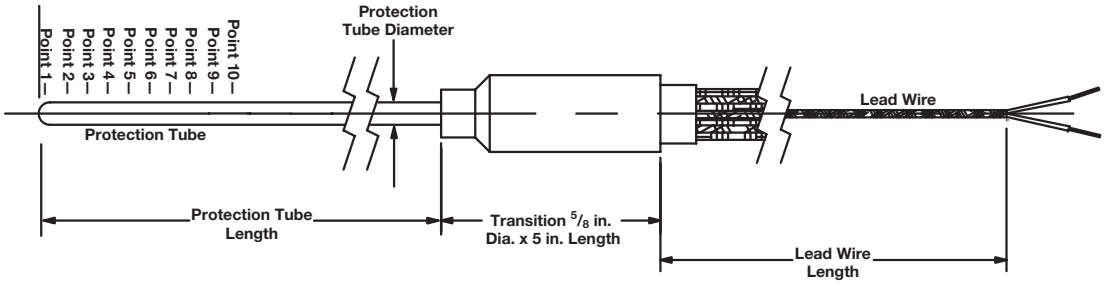

Note: Sensor point locations are measured from the protection tube tip. Please specify point location when ordering.

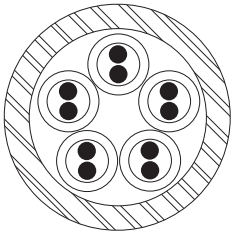

Thermocouple sensors made from mineral insulated, metal-sheathed cable are positioned inside the overall protection sheath.

Ordering Information

Part Number

① ②	③	④ ⑤	⑥	⑦	⑧	⑨ ⑩ ⑪	⑫	⑬ ⑭	⑮
Prot. Tube Dia.	Number of Points	Prot. Tube Materials	Calibration	Junction	Protection Tube Length	Lead Wire Const.	Lead Wire Length	Lead Wire Term.
AW									

③	Protection Tube Diameter (in.)
G =	0.125
H =	0.188
J =	0.250

④ ⑤	Number of Points
	01, 02, 03, 04, 05, 06, 07, 08, 09, 10

⑥	Protection Tube Materials
F =	316 SS
Q =	Alloy 600

⑦	Calibration	
	J	K
Standard limits	J	K
Special limits	3	4

⑧	Junction
G =	Grounded
U =	Ungrounded

⑨ ⑩ ⑪	Protection Tube Length (in.)
006 to 096	

⑫	Lead Wire Construction
A =	Fiberglass solid wire
C =	FEP solid wire

⑬ ⑭	Lead Wire Length (ft)
01 to 25	

⑮	Lead Wire Terminations
A =	Standard male plug
B =	Standard female jack
C =	Standard plug with mating connector
F =	Miniature male plug
G =	Miniature female jack
H =	Miniature plug with mating connector
T =	Standard, 1½ in. split leads

Product	Description	Temperature		Accuracy	Page
		°F	°C		
RTDs	Accurate, repeatable and interchangeable over a wide operating range.	-328 to 1200	-200 to 650	DIN Class A ± 0.06% at 32°F (0°C) DIN Class B ±0.12% at 32°F (0°C)	**68**
ENVIROSEAL™ HD	Suited for heavy-duty applications including those in harsh environments.	-40 to 392	-40 to 200	Available with either RTD or thermistors. See information above.	**80**



RTDs

Bends

Diameter in.	Standard Bend Radius in.	Minimum "H" Dimension in.	Minimum "C" Dimension in.
0.125	3/8	2	2
0.188	3/8	2	2
0.250	1/2	2	2

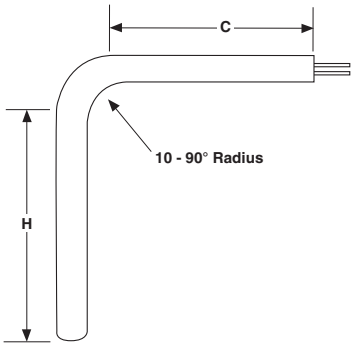

Lead Terminations

Termination	Code	Length
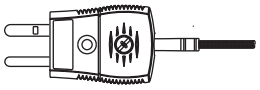 Standard Male Plug	A	—
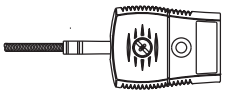 Standard Female Jack	B	—
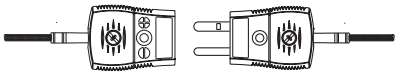 Standard Male Plug with Mating Connector	C	—
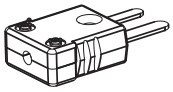 Miniature Male Plug	J	—
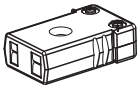 Miniature Female Jack	K	—
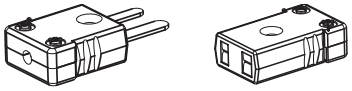 Miniature Male Plug with Mating Connector	L	—
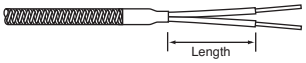 Split Leads	T	1 1/2*
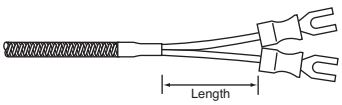 #8 Spade Lugs	U	1 1/2*

* When style contains jacketed wire.

RTDs

Fitting Options

Fixed Fittings

Fitting Type	Material	Sheath Size in.	NPT Thread Size in.	Hex Size in.	Length in.	Code
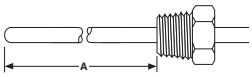 **Fixed Single Thread ⅛ NPT** Customer Specified	303 SS	0.063 to 0.250	1/8	7/16	11/16	A
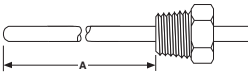 **Fixed Single Thread ¼ NPT** Customer Specified	303 SS	0.125 to 0.250	1/4	9/16	7/8	B
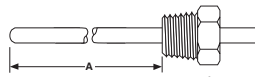 **Fixed Single Thread ½ NPT** Customer Specified	303 SS	0.125 to 0.250	1/2	7/8	1	D
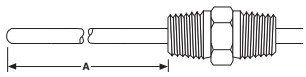 **Fixed Double Thread ½ NPT** Customer Specified	303 SS	0.125 to 0.250	1/2	7/8	1 3/4	F

Compression Fittings

Fitting Type	Material	Sheath Size in.	NPT Thread Size in.	Hex Size in.	Length in.	Code
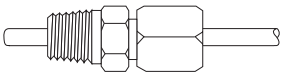 **Non-Adjustable Compression Brass**	Brass	0.125	1/8	1/2	1	J
		0.188	1/8	1/2	1 1/8	J
		0.250	1/8	1/2	1 3/16	J
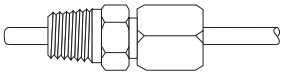 **Non-Adjustable Compression SS**	303 SS	0.063	1/8	1/2	1 1/4	L
		0.125	1/8	1/2	1 1/4	L
		0.188	1/8	1/2	1 5/16	L
		0.250	1/8	1/2	1 5/16	L
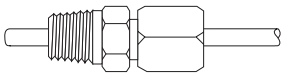 **Adjustable Compression TFE Gland**	303 SS	0.063	1/8	1/2	1 1/4	G
		0.125	1/8	1/2	1 1/4	G
		0.188	1/8	1/2	1 1/4	G
		0.250	1/4	7/8	2 7/16	X
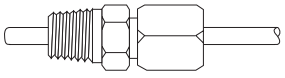 **Adjustable Compression Lava Gland**	303 SS	0.063	1/8	1/2	1 1/4	Q
		0.125	1/8	1/2	1 1/4	Q
		0.188	1/8	1/2	1 1/4	Q
		0.250	1/4	7/8	2 7/16	V

Compression Fittings: Compression fittings are shipped finger-tight on the sheath allowing field installation. Once non-adjustable fittings are deformed, they cannot be relocated. Adjustable fittings come with Tetrafluorethylene (TFE) sealant or lava sealant glands.

RTDs

Fitting Options (Continued)

Adjustable Spring Loaded

Fitting Type	Material	Sheath Size in.	NPT Thread Size in.	Hex Size in.	Length in.	Code
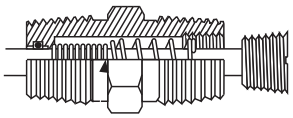	316 SS	0.250	1/2	7/8	2	H

Bayonet Lockcap and Spring

Fitting Type	Material	Sheath Size in.	Length in.	Code
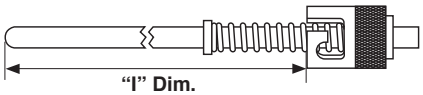	Plated Steel	0.125	1 5/8	W
	Plated Steel	0.188	1 5/8	W

RTDs

Watlow® manufactures a variety of RTD sensors that are specially designed to ensure precise and repeatable temperature measurement. Watlow sensors are built to meet the most demanding industrial applications while providing a lower total cost of ownership for our customers.

Performance Capabilities

- Precise and stable within the wide temperature range of -328 to 1200°F (-200 to 650°C)

Features and Benefits

Strain-free construction

- Provides dependable, accurate readings
- Allows elements from different lots to be substituted with no recalibration needed

High signal-to-noise output

- Increases accuracy of data transmission
- Permits greater distances between sensor and measuring equipment

Temperature coefficient (alpha) carefully controlled while insulation resistance values exceed DIN-IEC-751 standards

- Ensures sensor sensitivity
- Minimizes self heating
- Allows precise measurement
- Repeatable



Typical Applications

- Stoves, grills, fryers and other food equipment
- Textile production
- Plastics processing
- Petrochemical processing
- Air, gas and liquid temperature measurement
- Exhaust gas temperature measurement
- Semiconductor processing
- Bearing and gear boxes

RTDs

Standard Industrial Insulated Leads
Style RB

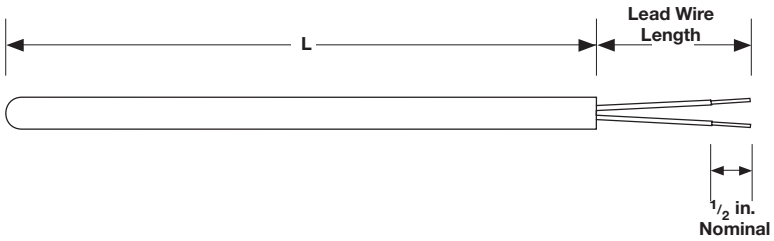

Ordering Information

Part Number

① ②	③	④	⑤	⑥	⑦	⑧ ⑨	⑩	⑪	⑫	⑬ ⑭	⑮
Sheath O.D. (in.)	Lead Wire Const.	Fittings	Lead Wire Term.	Sheath Const.	Sheath Length "L" (in.)	Sheath Length "L" (fract. in.)	Element	Initial Element Accuracy	Lead Wire Length (ft)	
RB					A						0

③	Sheath O.D. (in.)
G =	0.125
H =	0.188
J =	0.250

Note: 0.125 dia. supplied with 28 gauge wire. 0.188 and 0.250 dia. supplied with 24 gauge wire.

④	Lead Wire Construction*		
	Standard	Overbraid	Flex Armor
Fiberglass stranded	A	J*	R*
PFA stranded	B	L*	T*

Certain option combinations must be furnished with a transition between the sheath and lead wire. Contact the factory if a transition is unacceptable.
*May require a transition.

⑤	Fittings
If required, enter the order code from page 69. If none enter "0."	

⑥	Lead Wire Termination
A* =	Standard male plug 400°F (200°C)
B* =	Standard female jack
C* =	Standard plug with mating connector
J* =	Male miniature plug
K* =	Female miniature jack
L* =	Male/female mini set
T =	Standard leads
U =	Leads with spade lugs

* Requires two-or three-wire, single element only.

⑦	Sheath Construction
A =	316/316L SS

⑧ ⑨	Sheath Length "L" (in.)
Available lengths: 02 to 36	

⑩	Sheath Length "L" (fractional in.)
0 =	No fraction, whole inches
4 =	1/2 in.

⑪	Element		
	2-Wire	3-Wire	4-Wire
100Ω single	A	B	C
100Ω dual*	D	E	—
1000Ω single	J	K	L

* Available in 0.250 inch diameter only.

⑫	Initial Element Accuracy @ 0°C
A =	DIN Class A (±0.06%)
B =	DIN Class B (±0.12%)

⑬ ⑭	Lead Wire Length (ft)
Whole feet: 01 to 99	

Note: Single wires for 4 feet and under. Duplex wires for over 4 feet.

Features and Benefits

High accuracy
- Dependable readings

Customized diameters
- From 0.125 to 0.250 inch

Epoxy sealed
- Resists moisture and pull out
- Standard 500°F (260°C) potting

Durable rigid sheath
- 316 stainless steel -58 to 500°F (-50 to 260°C)

Internal heat transfer paste
- Quick time response

RTDs

Plug or Jack Termination
Style RC

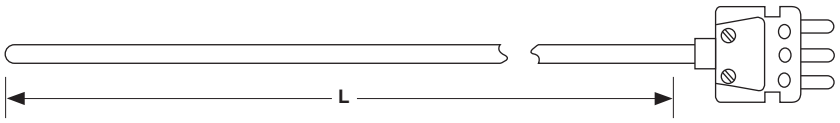

Ordering Information

Part Number

① ②	③	④	⑤	⑥	⑦	⑧ ⑨	⑩	⑪	⑫	⑬ ⑭	⑮
RC	Sheath O.D. (in.)	Cold End Term.	Fittings	0	Sheath Const.	Sheath Length "L" (in.)	Sheath Length "L" (fract. in.)	Element	Initial Element Accuracy	00	0

③ Sheath O.D. (in.)	
G =	0.125
H =	0.188
J =	0.250
Note: 0.125 dia. supplied with 28 gauge wire. 0.188 and 0.250 dia. supplied with 24 gauge wire.	

④ Cold End Termination	
A =	Standard plug
C =	Standard plug with mating connector
Note: Standard plugs and jacks 400°F (200°C).	

⑤ Fittings
If required, enter the order code from page 69. If none enter "0."

⑦ Sheath Construction	
A =	316/316L SS

⑧ ⑨ Sheath Length "L" (in.)
Whole inches: 02 to 36

⑩ Sheath Length "L" (fractional in.)	
0 =	No fraction, whole inches
4 =	1/2 in.

⑪ Element		
	2-Wire	3-Wire
100Ω single	A	B
1000Ω single	J	K

⑫ Initial Element Accuracy @ 0°C	
A =	DIN Class A (±0.06%)
B =	DIN Class B (±0.12%)

Features and Benefits

Durable rigid sheath
- 316 SS -58 to 500°F (-50 to 260°C)

Durable connectors with copper pins
- 400°F (200°C) temperature rating
- Provides simple connection to extension leads

Brazed adapter
- Provides superior connector attachment

High accuracy
- Ensures dependable readings

RTDs

Metal Transitions
Style RF

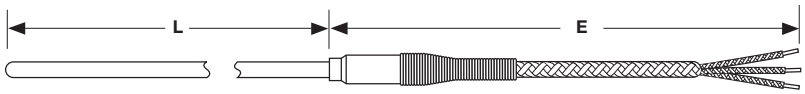

Ordering Information

Part Number

① ②	③ Sheath O.D. (in.)	④ Lead Wire Const.	⑤ Fittings	⑥ Lead Wire Term.	⑦ Sheath Const.	⑧ ⑨ Sheath Length "L" (in.)	⑩ Sheath Length "L" (fract. in.)	⑪ Element	⑫ Initial Element Accuracy	⑬ ⑭ Lead Wire Length (ft)	⑮
RF											0

③ Sheath O.D. (in.)	
G =	0.125
H =	0.188
J =	0.250

Note: All sheath diameters, MI cable only (high temp) are 24 gauge duplex lead wire.

④ Lead Wire Construction	Standard	Overbraid	Flex Armor
Fiberglass stranded	A	J	R
PFA stranded	B	L	T

⑤ Fittings

If required, enter the order code from page 69. If none enter "0."

⑥ Lead Wire Termination	
A* =	Standard male plug
B* =	Standard female jack
C* =	Standard plug with mating connector
J* =	Male miniature plug
K* =	Female miniature jack
L* =	Male/female mini set
T =	Standard leads
U =	Leads with spade lugs

* Requires two-or three-wire, single element only.

⑦ Sheath Construction	
K =	316/316L SS mineral insulated

⑧ ⑨ Sheath Length "L" (in.)

Whole inches: 03 to 99, metric lengths and lengths over 99 inches contact factory. Maximum length 165 inches.

⑩ Sheath Length "L" (fractional in.)	
0 =	No fraction, whole inches
4 =	1/2 in.

⑪ Element	2-Wire	3-Wire
100Ω single	A	B

⑫ Initial Element Accuracy @ 0°C	
A =	DIN Class A (±0.06%)
B =	DIN Class B (±0.12%)

⑬ ⑭ Lead Wire Length (ft)

Whole feet: 01 to 99

Features and Benefits

Stainless steel transitions filled with 500°F (260°C) epoxy
- Protects sensor from moisture
- Encapsulates connection between wire and cable

Coiled spring strain relief
- Protects lead wire against sharp bends in the transition area

Flexible mineral insulated construction
- Provides a bendable and highly durable sensor

Temperature rating
- -328 to 1200°F (-200 to 650°C)

High accuracy
- Ensures dependable readings

Diameters available
- 0.125 to 0.250 inch O.D.

RTDs

Connection Head/Optional Transmitter Style RR

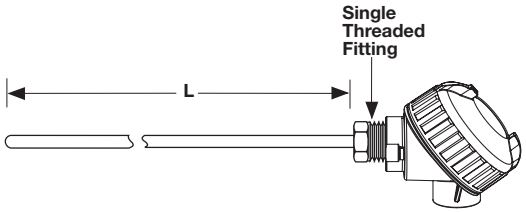

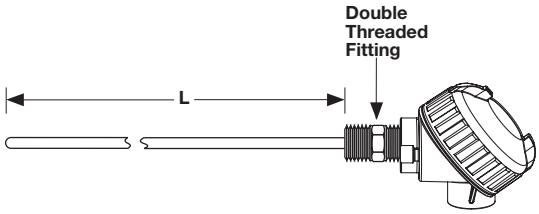

Ordering Information

Part Number

① ②	③	④	⑤	⑥	⑦	⑧ ⑨	⑩	⑪	⑫	⑬ ⑭	⑮
RR	Sheath O.D. (in.)	Con. Head	Head Mtg. Fittings	0	Sheath Const.	Sheath Length "L" (in.)	Sheath Length "L" (fract. in.)	Element	Initial Element Accuracy	00	Tag Style

③	Sheath O.D. (in.)
G =	0.125
H =	0.188
J =	0.250

Note: 0.125 dia. supplied with 28 gauge wire. 0.188 and 0.250 dia. supplied with 24 gauge wire.

④	Connection Head
C =	Polypropylene
D =	Cast iron
E =	Cast aluminum
H =	Explosion proof
U* =	E head with 5750 transmitter
V* =	C head with 5750 transmitter
W* =	H head with 5750 transmitter

* For units with transmitter, the order must specify a range and degree F or C, as well as a temperature span.

⑤	Head Mounting Fittings
O =	Single threaded, 303 SS
F =	Double threaded, 303 SS 1/2 in. NPT
H* =	Spring loaded, double threaded, 316 SS 1/2 in. NPT

* Available in 0.250 inch diameter only.

⑦	-58 to 500°F (-50 to 260°C) 316 SS	-328 to 1200°F (-200 to 650°C) 316 SS
Standard industrial 0.125 - 0.250 in. O.D.)	A	—
Mineral insulated (0.125 - 0.250 in. O.D.)	—	K

⑧ ⑨	Sheath Length "L" (in.)
A =	Sheath construction requires 2 in. min to 36 in. max. length
K =	Sheath construction requires 3 in. min to 99 in. max. length

⑩	Sheath Length "L" (fractional in.)
0 =	No fraction, whole inches
1 =	1/8
2 =	1/4
3 =	3/8
4 =	1/2
5 =	5/8
6 =	3/4
7 =	7/8

⑪ Element	2-Wire	3-Wire	4-Wire
100Ω single	A	B	C
100Ω dual *, **	D	E	—
1000Ω single **	J	K	L

* Available in 0.250 inch diameter only.
** Available with standard industrial construction only.

⑫	Initial Element Accuracy @ 0°C
A =	DIN Class A (±0.06%)
B =	DIN Class B (±0.12%)

⑮	Tag Style
0 =	Polymeric
1 =	300 SERIES SST

Features and Benefits

Connection heads

- Provides superior dust and moisture resistance

Weatherproof plastic heads

- Resists weak acids, organic solvents, alkalies, sunlight and dust

Complete assembly available

- Head-mounted 4-20mA transmitter, three- or four-wire input and non-isolated

RTDs

For Use With Thermowells Style RT

WATLOW SELECT®

Type 1

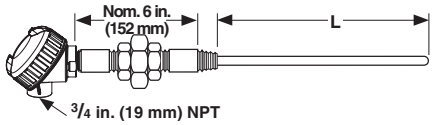

6 inch N-U-N Typical (2 each ½ X 3 inch steel pipe nipples and 1 each malleable union)

Type 3

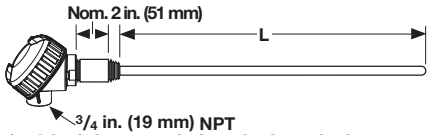

½ x 3 inch long steel pipe nipple typical

Type 4

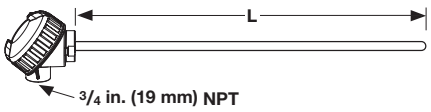

Ordering Information

Part Number

① ②	③	④	⑤	⑥	⑦	⑧ ⑨	⑩	⑪	⑫	⑬	⑭	⑮
Sheath O.D. (in.)		Conn. Head	Cold End Config.		Sheath Const.	Sheath Length "L" (in.)	Sheath Length "L" (fract. in.)	Element	Initial Element Accuracy		Spring-Loading	Tag Style
RT				0						0		

③ Sheath O.D. (in.)

J =	0.250

Note: Supplied with 24 gauge wire.

④ Connection Head

C =	Polypropylene
D =	Cast iron
E =	Cast aluminum
H =	Explosion proof
U* =	E head with 5750 transmitter
V* =	C head with 5750 transmitter
W* =	H head with 5750 transmitter

* For units with transmitter, the order must specify a range and degree F or C, as well as a temperature span.

⑤ Cold End Configuration

1 =	Type 1
3 =	Type 3
4 =	Type 4

⑦ Sheath Construction

	-58 to 500°F (-50 to 260°C) 316 SS	-328 to 1200°F (-200 to 650°C) 316 SS
Standard industrial (0.125 - 0.250 in. O.D.) (Max. length 36 in.)	A	—
Mineral insulated (0.125 - 0.250 in. O.D.) (Max. length 165 in.)	—	K

⑧ ⑨ Sheath Length "L" (in.) - See Drawings Above

*When ordering a complete assembly with thermowell, specify "AR" as required and reference pages 103 to 107 for "U" dimension; otherwise, specify the "L" dimension in whole inches.
***Note**, maximum sheath length is 36 inches for sheath construction A.

⑩ Sheath Length "L" (fractional in.)

0 =	No fraction, whole inches
1 =	1/8
2 =	1/4
3 =	3/8
4 =	1/2
5 =	5/8
6 =	3/4
7 =	7/8

⑪ Element

	2-Wire	3-Wire	4-Wire
100Ω single	A	B	C
100Ω dual*	D	E	—
1000Ω single*	J	K	L

* Available with standard industrial construction only.

⑫ Initial Element Accuracy @ 0°C

A =	DIN Class A (±0.06%)
B =	DIN Class B (±0.12%)

⑭ Spring -Loading

Y =	Yes
N =	No

⑮ Tag Style

0 =	Polymeric
1 =	300 SERIES SST

Features and Benefits

High quality thermowells and pipe wells
- Protects sensor

Mineral insulated construction
- Available in 0.125 to 0.250 inch O.D.

Available with spring-loading
- Ensures positive contact

Complete assembly available
- Head-mounted 4-20mA transmitter, three- or four-wire input and non-isolated

Variety of connection head options
- Meets your application requirements

RTDs

For Use With Thermowells
Style RW

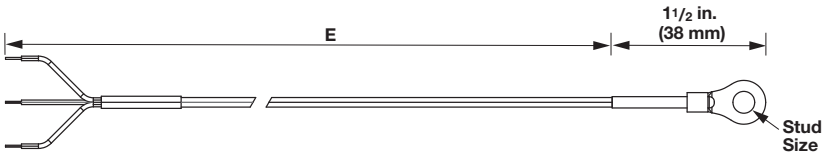

Ordering Information

Part Number

① ②	③	④	⑤	⑥	⑦	⑧ ⑨ ⑩	⑪	⑫	⑬ ⑭	⑮
	Sheath O.D. (in.)	Lead Wire Const.		Lead Wire Term.	Stud Size - Hole Dia. (inch)		Element	Temp. Coefficient	Lead Wire Length "E" (foot)	Special Reqmts.
RW	G		0			0 0 0				0

③	Sheath O.D. (in.)
G =	0.125

④	Lead Wire Construction
A =	900°F (500°C) Fiberglass stranded
B =	400°F (200°C) Teflon® stranded

⑥	Lead Wire Termination
A =	Standard male plug
B =	Standard female plug
C =	Standard plug with mating connector
T =	Standard leads
U =	Leads with spade lugs

⑦	Stud Size - Hole Diameter (inch)
A =	No. 6 - 0.144
B =	No. 8 - 0.169
C =	No. 10 - 0.196
D =	1/4 - 0.266
E =	3/8 - 0.390

⑪	Element	
	2-Wire	3-Wire
100Ω single	A	B

⑫	Temperature Coefficient
	DIN 0.00385
Class A	A
Class B	B

⑬ ⑭	Lead Wire Length "E" (foot)
Whole feet: 01-99	

⑮	Special Requirements
If none, enter "0." If required, contact factory.	

Features and Benefits

Sensor temperature rating
- -50° to 200°C

High accuracy
- Ensures dependable readings

Washer terminals
- Brazed to a 316 SS tube, 0.125 in. diameter, 1 1/2 in. long.

Sensors placed beneath existing screws or bolts
- Permits surface temperature measurement

RTDs

Specialty Construction Styles

Adjustable Spring Style

Part Number 10 = 6 in.
Part Number 11 = 12 in.

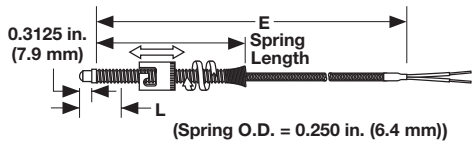

Adjustable Armor Style

Part Number 12

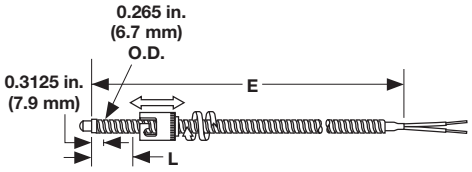

Cartridge with Flange

Part Number 25

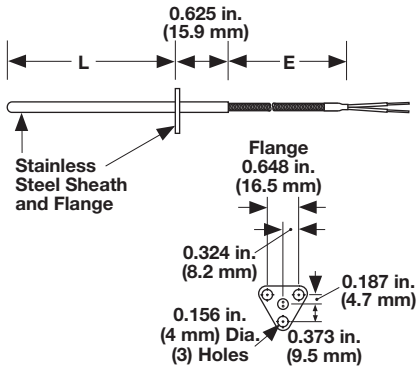

Open Air

Part Number 50

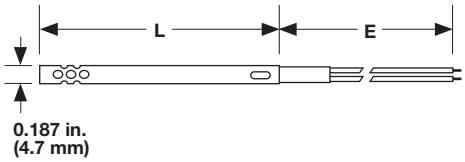

Open Air with Flange

Part Number 55

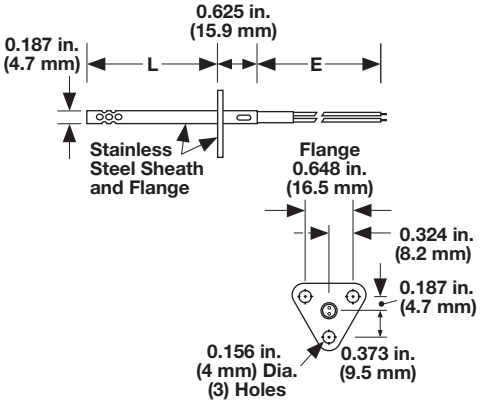

Surface Mount

Part Number 80

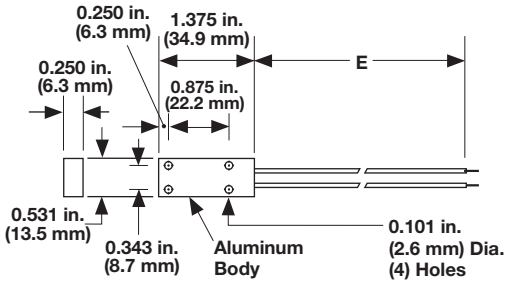

RTDs

Specialty RTDs

Ordering Information

Part Number

①	② ③	④	⑤	⑥ ⑦	⑧	⑨ ⑩ ⑪	⑫
	Const. Styles	Diameter (in.)	Element Type	Lead Type	Sheath Length "L" (in.)	Lead Wire Length "E" (ft)	Term.
S							

② ③	Construction Styles
10 =	6 inch adjustable spring style
11 =	12 inch adjustable spring style
12 =	Adjustable armor style
25 =	Cartridge with flange
50 =	Open air
55 =	Open air with flange
80 =	Surface mount
Note: See previous page for construction style drawings.	

④	Diameter (in.)
D =	0.188
A =	Not applicable: surface mount

⑤	Element Type
C =	RTD 2-wire, 100Ω DIN 0.00385
D =	RTD 3-wire, 100Ω DIN 0.00385

⑥ ⑦	Lead Type
L4 =	Fiberglass and SS armor
M4=	Fiberglass
N4 =	Fiberglass and SS overbraid
T2 =	PFA

⑧					
A =	Not applicable	K =	5.0 in.	T =	9.0 in.
C* =	1.5 in.	L =	5.5 in.	U =	9.5 in.
D =	2.0 in.	M =	6.0 in.	W =	10 in.
E =	2.5 in.	N =	6.5 in.	Y =	11 in.
F =	3.0 in.	P =	7.0 in.	Z =	12 in.
G =	3.5 in.	Q =	7.5 in.		
H =	4.0 in.	R =	8.0 in.		
J =	4.5 in.	S =	8.5 in.		
* 1.5 required for VAT construction: No. 10, 11, 12)					

⑨ ⑩ ⑪			
012 =	1 ft	084 =	7 ft
024 =	2 ft	096 =	8 ft
036 =	3 ft	108 =	9 ft
048 =	4 ft	120 =	10 ft
060 =	5 ft	180 =	15 ft
072 =	6 ft		

⑫	Terminations
A =	1.5 inch stripped split leads, no terminals
B =	No. 8 spade terminals
H =	0.25 in. female quick connect terminals

Specifications

- Two- or three-wire
- Resistance: 100Ω at 0°C
- Alpha curve: 0.00385Ω/Ω/°C
- Tolerance at 0°C: ±0.12%
- Range: -58 to 500°F (-50 to 260°C)

EXTENDED CAPABILITY

ENVIROSEAL™ HD Sensors

Watlow's ENVIROSEAL™-HD temperature sensor keeps out moisture, oil and contaminants in all heavy-duty applications including those outside applications exposed to harsh weather, oils and other extreme moisture environments. The ENVIROSEAL-HD sensor is designed to provide accurate, dependable measurements in high-vibration environments.

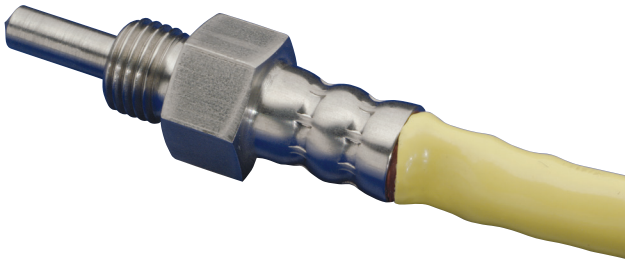

Features and Benefits

Submersible and 1200psi pressure wash rated seal (not including connector area)

- Protects the sensor from washdown or other extreme moisture environments

Oil resistant materials

- Sensors maintain a long life even when exposed to oil, gasoline or diesel fuel

Vibration resistant design, 25 lb pull out force rating

- Tough, rugged design to hold up to the roughest applications

-40 to 392°F (-40 to 200°C) sensor temperature rating

- Offers superior application flexibility

Time response of two seconds

- Fast response measures 63.2% (first order) of the temperature change in two seconds or less

250psi threaded fitting pressure rating

- Suitable for most rugged applications

Typical Applications

- Engine coolant or oil
- Refrigeration or condensation units
- Industrial equipment
- Heat exchangers
- Gear boxes
- Hydraulic fluid
- Marine

ENVIROSEAL HD Sensors

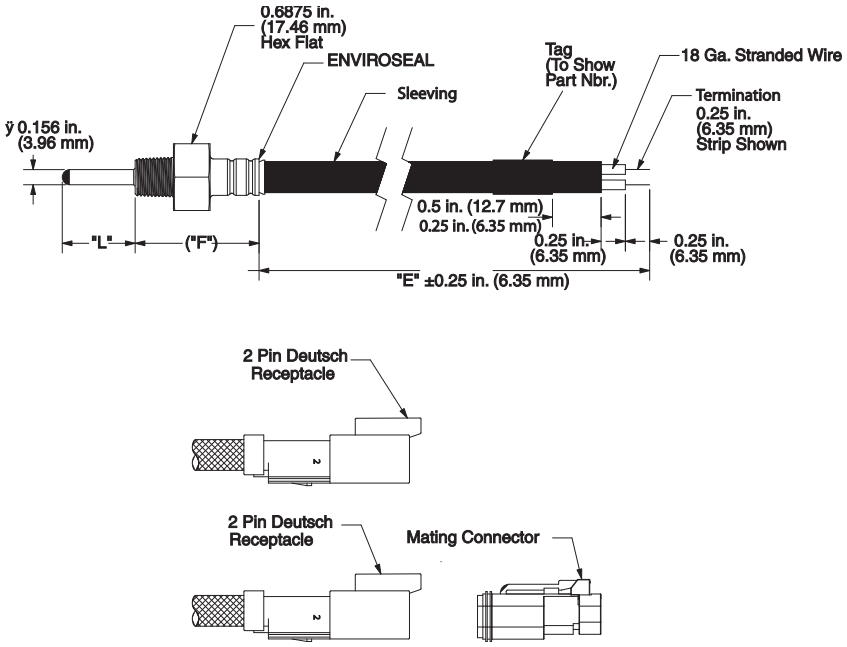

Sensor Types:

- RTD
- Sheath length: 0.75 to 3 inches
- Fitting: 1/4 inch NPT or 1/8 inch NPT male thread either brass or 316 stainless steel
- Lead length: Up to 24 inches
- Lead wire: 18 gauge stranded with Tefzel® insulation
- Lead wire terminations: Stripped leads or Deutsch 2 pin connector or similar automotive style connector

Accessories

Product	Description	Page
Fittings	A variety of sensor mounting fittings are available such as fixed, adjustable, non-adjustable, compression and bayonet style.	**83**
Thermowells	Thermowells are manufactured from drilled bar stock and provide a pressure-tight connection at the point of installation. These thick-wall thermowells are sturdy enough to handle high pressure, high velocity and corrosive environments. Suited for applications where the sensors are not compatible with the environment.	**87**
Protection Tubes	Constructed of ceramic or metal. The metal protection tubes are suited for high thermal conductivity for fast, precise readings. The ceramic tubes resist deformation, corrosion, abrasion and oxidation.	**92**
Connectors	Many varieties of connectors are available such as standard, quick-attach, high-temperature, three-pole and miniature connectors. All Watlow® connectors meet the ASTM E1129 requirement and are color coded.	**93**
Connection Heads and Blocks	Watlow offers standard cast iron or aluminum, explosion proof and polypropylene heads. Terminal blocks are available to complement the connection heads.	**100**
Transmitters	Watlow's temperature transmitters offer accurate measurement and improved reliability, which reduces downtime and costs. The two-wire signal conditioner is constructed using surface mount and digital technology.	**102**



Fittings

Sensor Mounting Fittings - Non-Adjustable

Non-Adjustable Compression Type

Non-adjustable compression type fittings allow the exact immersion length to be set in the field during sensor installation. Since the compression sleeve and sheath are deformed in application, the fitting cannot be relocated along the sheath after tightening. When ordered as a part of a sensor for mounting the thermocouple, all compression type fittings are shipped finger-tight on the sheath.

Brass Compression Fitting, Non-Adjustable

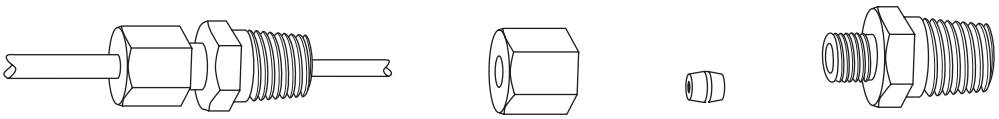

Brass Compression Fitting, Assembled | Cap | Sleeve | Body

Part No.	Sheath O.D. in.	Material	Bore +0.10, -0.000 in.	Male NPT in.	Length in.
TH-185-2	0.125	Brass	0.130	1/8	1
TH-185-3	0.188	Brass	0.192	1/8	1 1/8
TH-185-4	0.250	Brass	0.256	1/8	1 3/16
TH-185-5	0.250	Brass	0.256	1/4	1 3/8
TH-185-6	0.313	Brass	0.318	1/4	1 3/8
TH-185-7	0.375	Brass	0.380	1/4	1 7/16
TH-185-9	0.250	Brass	0.256	1/2	1 3/4

Stainless Steel Compression Fitting, Non-Adjustable

Made entirely of 303 stainless steel

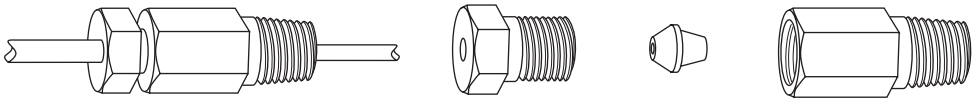

Single Threaded | Cap | Ferrule | Body

Single Threaded		Sheath O.D. in.	Bore ±0.001 in.	Male NPT in.	Hex Across Flats in.
Part No.	Length (in.)				
TH-2745-063	1¼	0.063	0.067	1/8	1/2
TH-2745-125	1¼	0.125	0.129	1/8	1/2
TH-2745-188	1 5/16	0.188	0.194	1/8	1/2
TH-2745-250	1 5/16	0.250	0.257	1/8	1/2

Note: All accessories are subject to minimum purchase quantities.

Fittings

Sensor Mounting Fittings - Adjustable

Adjustable Compression Type

Adjustable compression type fittings can be relocated at different positions along the sheath whenever changes in the immersion length are necessary. To relocate an adjustable compression fitting, simply loosen the cap, slide the fitting to the new location and retighten the cap. It is recommended that lava sealant glands be replaced after each tightening. Tetrafluorethylene (TFE) sealant glands should withstand several relocations before replacement is necessary.

Stainless Steel Adjustable Compression Fitting

Except for their sealant glands, these fittings are made entirely of 303 stainless steel. Sealant glands are available in TFE, -300 to 500°F (-184 to 260°C). Fittings are pressure rated up to 3,000psi depending on temperature and sheath diameter.

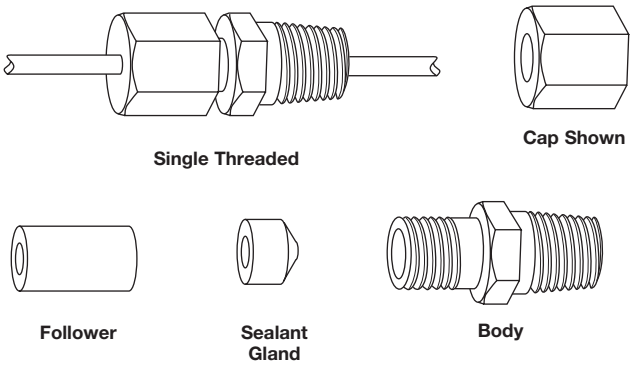

Single Threaded		Sheath O.D.	Bore +0.002	Male NPT	Hex Across Flats	Replacement Sealant
Part No.*	Length in.	in.	in.	in.	in.	Glands, Neoprene
TH-2747-T-063	1 1/4	0.063	0.067	1/8	1/2	**TH-279-T-063**
TH-2747-T-125	1 1/4	0.125	0.136	1/8	1/2	**TH-279-T-125**
TH-2747-T-188	1 1/4	0.188	0.193	1/8	1/2	**TH-279-T-188**
TH-2748-T-250	2 7/16	0.250	0.257	1/4	7/8	**TH-280-T-250**
TH-2748-T-313	2 7/16	0.313	0.316	1/4	7/8	**TH-280-T-313**
TH-2748-T-375	2 7/16	0.375	0.386	1/4	7/8	**TH-280-T-375**

*If lava sealant glands are desired, substitute L in place of T in the part number.

Adjustable Spring-Loaded Hex Fitting

The adjustable spring-loaded fitting has a stainless steel body, end cap and spring and is designed for use with 0.250 inch O.D. sheath thermocouples and RTDs. This fitting is not intended for use in pressurized applications.

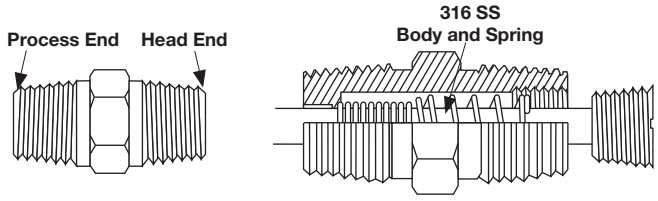

Part No.	Sheath			Male NPT	Hex Across Body Flats	Hex Across Cap Flats
	Length in.	O.D. in.	Material	in.	in.	in.
6556-250	2	0.250	316 SS	1/2	7/8	9/16

Note: All accessories are subject to minimum purchase quantities.

Fittings

Bayonet Fittings

Adjustable Bayonet Compression Fitting

This fitting combines features of the fixed bayonet fitting in a compact unit that does not require brazing to assemble.

The fitting is designed for 0.125 inch O.D. sensor and is available with either brass or TFE ferrules.

For TFE ferrules, the fitting may be relocated at different positions along the sheath if changes in the immersion length are necessary. Brass ferrules cannot be relocated once they are set.

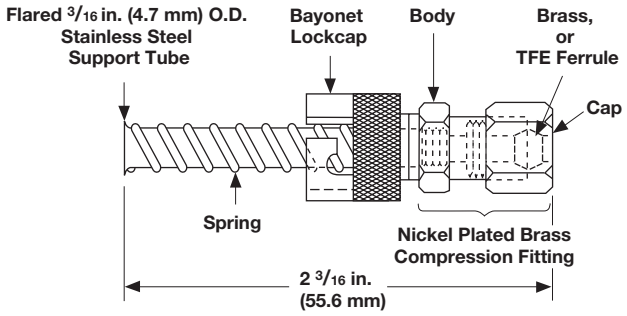

Part No.	Description
TH-2762-BR	Adjustable bayonet fitting with brass ferrule
TH-2762-T	Adjustable bayonet fitting with TFE ferrule

Fixed Bayonet Fitting

When used together, a bayonet fitting and bayonet adapter act as a spring-loading device for bottoming a thermocouple hot junction in a hole. The fitting is designed for use on an 0.188 inch O.D. sensor. The TH-2760 fitting includes a lockcap, spring and spring stop, which requires brazing for assembly.

The adapter requires a tapped 1/8 inch NPT or 3/8 24 hole for mounting. All components are nickel plated steel.

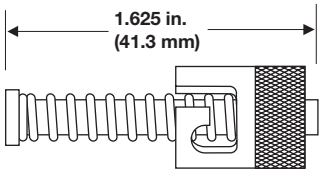

Bayonet Lockcap and Spring

Part No.	Description
TH-2760	Lockcap, spring and spring stop

Bayonet Adapter

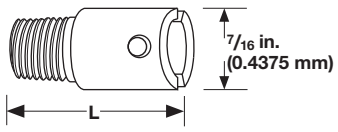

Part No.	Description	Length in.	Thread in.
TH-295-1	Bayonet Adapter	7/8	1/8 NPT
TH-295-2		1	1/8 NPT
TH-295-3		1 1/2	1/8 NPT
TH-295-4		2	1/8 NPT
TH-295-5		2 1/2	1/8 NPT
TH-298-1		7/8	3/8-24 SAE
TH-298-2		1 1/2	3/8-24 SAE

Note: All accessories are subject to minimum purchase quantities.

Fittings

Bayonet Fittings (Continued)

Pipe Clamp with Bayonet Adapter

The pipe clamp band with bayonet adapter is designed for use in conjunction with a bayonet style thermocouple. It allows temperature measurement without drilling or tapping. Thermocouple replacement is extremely fast and simple and is accomplished without disturbing surroundings, such as pipe insulation.

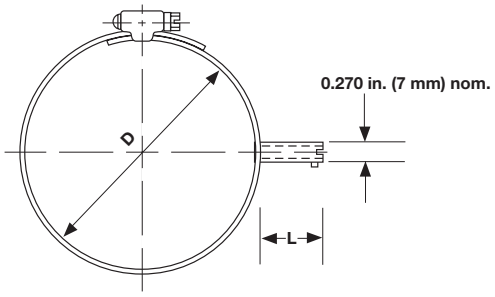

Ordering Information

Part Number

① ② Const. Part	③ "D" Clamp Band Dia.	④ "L" Bayonet Adapter Length

① ②	Construction Code
90 =	Pipe clamp band with bayonet adapter

③	"D" Clamp Band Diameter Range (in.)
A =	11/16 to 1 1/4
B =	1 1/4 to 2 1/4
C =	2 1/4 to 3 1/4
D =	3 1/4 to 4 1/4
E =	4 1/4 to 5
F =	5 to 6
G =	6 to 7

④	"L" Bayonet Adapter Length (in.)
1 =	1 (use with thermocouple that has "B" dimension = 2 in.)
2 =	2 (use with thermocouple that has "B" dimension = 3 in.)

Note: All combinations are available for next day shipment.

Note: All accessories are subject to minimum purchase quantities.

Thermowells

Manufactured from drilled bar stock, Watlow thermowells provide a pressure-tight connection at the point of installation. With thick walls, thermowells are sturdy enough to handle high pressure, high velocity and corrosive environments. They are frequently used in petrochemical and power plant applications.

Highly critical or demanding applications may require thermowells not only for protection of the temperature sensor, but also to withstand high pressure, erosion or both, caused by material flows through vessels.



Features and Benefits

Bar stock used to manufacture thermowells

- Provides protection against corrosion
- Round bar with wrench flats is substituted when hex is not available

Typical Applications

- Petrochemical
- Chemical
- Oil refineries
- Power plants
- Storage tanks and lines

	Manufacturing Standards
Bar Stock	Mill standards (±0.010 inch approximately)
Process Connection	Threaded: Inspected with standard ring gauge Flanged: Front J groove welds are ¼ inch wide by ¼ inch deep. Welds are machined, leaving ⅛ inch radius. Rear welds are ⅛ inch wide by ⅛ inch deep. Welds are machined, leaving ¼ inch radius. Full penetration welds are available upon request. Must be specified.
Stem O.D.	Straight: ±0.015 inch Tapered: ±0.015 inch (minor dimension)
U Dimension	±1/8 inch
Overall Dimension	±1/8 inch
End Thickness	1/4 inch ±1/16 inch
Finish	63 RMS
Bore	+0.005 inch -0.003 inch
Tapered Wells	The maximum taper on all thermowells is 16 inches +0.5 - 1.0.

Specifications listed are for standard thermowells or for thermowells manufactured where no other specifications prevail.

Note: All accessories are subject to minimum purchase quantities.

Thermowells

Threaded Type—Straight

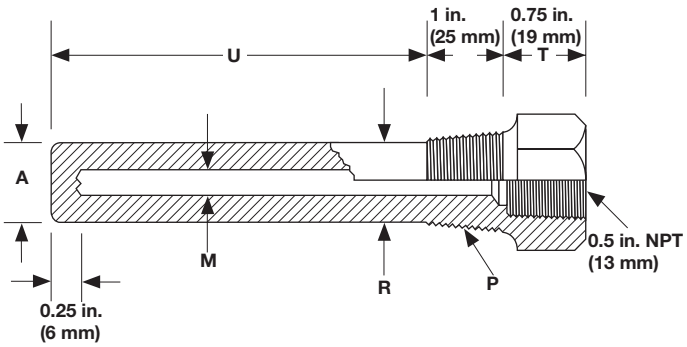

Standard Bore Size: 0.260 inch

Standard Materials: 304 SS, 316 SS

Typical Dimensions

Process Conn. NPT P in.	A in.	M in.	R in.	T in.
1	49/64	0.260	49/64	3/4
3/4	49/64	0.260	49/64	3/4

Ordering Information

Part Number

①	② T'Well Style	③ Stem Config.	④ ⑤ ⑥ "U" Dim. (fract in.)	⑦ T'Well Material	⑧ Process Conn. Size "P"	⑨ Flange Rating	⑩ Flange Face Type	⑪ Flange Material	⑫ Lag "T" (in.)	⑬ Lag "T" (fract. in.)	⑭ Bore Dia. "M"	⑮ Special Options
T	T	S							0	6		

② Thermowell Style	
T=	Threaded

③ Stem Configuration	
S =	Straight

④ ⑤ ⑥ "U" Dimension (fractional in.)	
024 =	2 1/2
044 =	4 1/2
074 =	7 1/2
104 =	10 1/2
134 =	13 1/2
164 =	16 1/2
224 =	22 1/2

Note: For "U" lengths not specified, contact factory.

⑦ Thermowell Material	
A =	304
C =	316 SS

⑧ Process Connection Size "P" (in.)	
D =	3/4 NPT
E =	1 NPT

⑨ Flange Rating	
0 =	No flange

⑩ Flange Face Type	
0 =	No flange

⑪ Flange Material	
0 =	No flange

⑫ Lag "T" (in.)	
0 =	No option available

⑬ Lag "T" (fractional in.)	
6 =	3/4 - Industry standard

⑭ Bore Diameter "M" (in.)	
A =	0.260

⑮ Special Options	
0 =	None

Note: All accessories are subject to minimum purchase quantities.

Thermowells

Threaded Type—Tapered

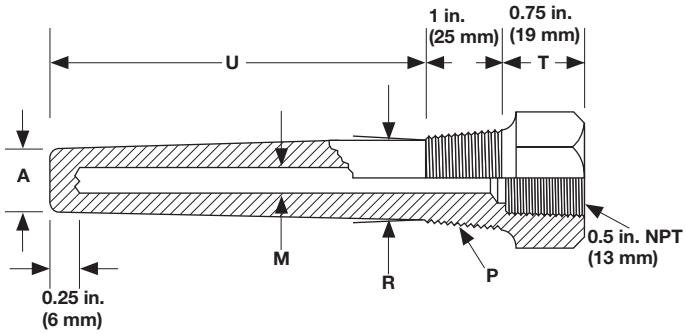

Standard Bore Size: 0.260 inch

Standard Materials: 304 SS, 316 SS

Typical Dimensions

Process Conn. NPT P in.	A in.	M in.	R in.	T in.
1	5/8	0.260	1 1/16	3/4
3/4	5/8	0.260	7/8	3/4

Ordering Information

Part Number

①	② T'Well Style	③ Stem Config.	④ ⑤ ⑥ "U" Dim. (fract in.)	⑦ T'Well Material	⑧ Process Conn. Size "P"	⑨ Flange Rating	⑩ Flange Face Type	⑪ Flange Material	⑫ Lag "T" (in.)	⑬ Lag "T" (fract. in.)	⑭ Bore Dia. "M"	⑮ Special Options
T	T	T							0	6		

② Thermowell Style	
T=	Threaded

③ Stem Configuration	
T =	Standard taper

④ ⑤ ⑥ "U" Dimension (fractional in.)	
024 =	2 1/2
044 =	4 1/2
074 =	7 1/2
104 =	10 1/2
134 =	13 1/2
164 =	16 1/2
224 =	22 1/2
Note: For "U" lengths not specified, contact factory.	

⑦ Thermowell Material	
A =	304 SS
C =	316 SS

⑧ Process Connection Size "P" (in.)	
D =	3/4 NPT
E =	1 NPT

⑨ Flange Rating	
0 =	No flange

⑩ Flange Face Type	
0 =	No flange

⑪ Flange Material	
0 =	No flange

⑫ Lag "T" (in.)	
0 =	No option available

⑬ Lag "T" (fractional in.)	
6 =	3/4 - Industry Standard

⑭ Bore Diameter "M" (in.)	
A =	0.260

⑮ Special Options	
0 =	None

Note: All accessories are subject to minimum purchase quantities.

Thermowells

Bimetallic Thermometer Wells—Threaded Type

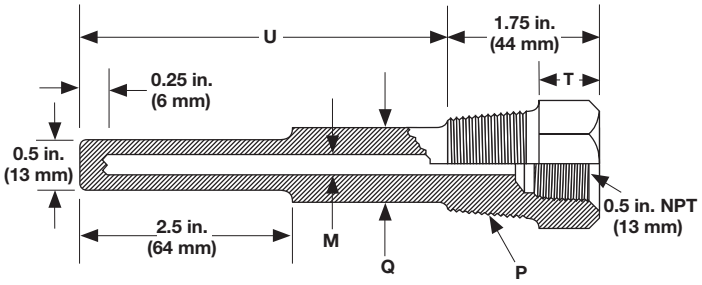

Standard Bore Size: 0.260 inch

Standard Materials: 304 SS, 316 SS

Typical Dimensions

Process Conn. NPT P in.	Q in.	T in.
1/2 *	5/8	1
3/4	3/4	3/4
1	7/8	3/4

*On 1/2 inch NPT external threaded wells, the 1 inch thread allowance and 3/4 inch wrench allowance dimensions are reversed to accommodate the 1/2 inch NPT female thread.

Ordering Information

Part Number

①	②	③	④ ⑤ "U" Dim. (in.)	⑥ "U" Dim. (fract. in.)	⑦ Thermo-well Mat'l	⑧ Process Conn. "P" (in.)	⑨ Flange Rating	⑩ Flange Face Type	⑪ Flange Material	⑫ Lag "T" (in.)	⑬ Lag "T" (fract. in.)	⑭ Bore Dia "M" (in.)	⑮ Special Options
T	B	D											

④ ⑤ "U" Dimension (in.)
Whole inches: 00 to 22

⑥ "U" Dimension (fractional in.)	
0 =	0
4 =	1/2

⑦ Thermowell Material	
A =	304 SS
C =	316 SS

⑧ Process Connection "P" (in.)	
C =	1/2 NPT
D =	3/4 NPT
E =	1 NPT

⑨ Flange Rating	
0 =	No flange

⑩ Flange Face Type	
0 =	No flange

⑪ Flange Material	
0 =	No flange

⑫ Lag "T" (in.)	
0 =	Whole inches: 0 to 9

⑬ Lag "T" (fractional in.)	
0 =	0
1 =	1/8
2 =	1/4
3 =	3/8
4 =	1/2
5 =	5/8
6 =	3/4
7 =	7/8

⑭ Bore Diameter "M" (in.)	
A =	0.260

⑮ Special Options	
0 =	Standard options

Thermowells

Socket Weld Type

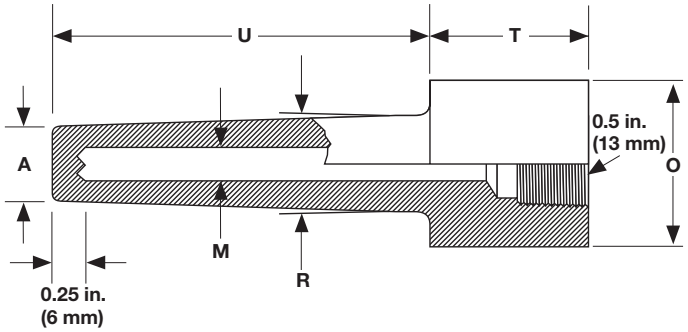

Standard Bore Size: 0.260 inch

Standard Materials: 304 SS, 316 SS

Typical Dimensions

Stock Size/Hex Size O in.	A in.	R in.	T in.
1.315	49/64	1	1 3/4
1.050	49/64	7/8	1 3/4

Ordering Information

Part Number

①	② Thermo-well Style	③ Stem Config.	④ ⑤ "U" Dim. (in.)	⑥ "U" Dim. (fract. in.)	⑦ Thermo-well Mat'l	⑧ Process Conn. "0" (in.)	⑨ Flange Rating	⑩ Flange Face Type	⑪ Flange Material	⑫ Lag "T" (in.)	⑬ Lag "T" (fract. in.)	⑭ Bore Dia "M" (in.)	⑮ Special Options
T	S	T											

② Thermowell Style	
S =	Socket weld

③ Stem Configuration	
T =	Standard taper

④ ⑤ "U" Dimension (in.)
Whole inches: 00 to 22

⑥ "U" Dimension (fractional in.)	
0 =	0
4 =	1/2

⑦ Thermowell Material	
A =	304 SS
C =	316 SS

⑧ Process Connection "0" (in.)	
L =	1.050 O.D.
M =	1.315 O.D.

⑨ Flange Rating	
0 =	No flange

⑩ Flange Face Type	
0 =	No flange

⑪ Flange Material	
0 =	No flange

⑫ Lag "T" (in.)	
0 =	Whole inches: 0 to 9

⑬ Lag "T" (fractional in.)	
0 =	0
1 =	1/8
2 =	1/4
3 =	3/8
4 =	1/2
5 =	5/8
6 =	3/4
7 =	7/8

⑭ Bore Diameter "M" (in.)	
A =	0.260

⑮ Special Options	
0 =	Standard options

Protection Tubes

Coated Protection Tubes for Molten Aluminum, Zinc and Galvanizing Applications

SERIES 1100 Protection Tube

With a tough refractory laminated coating, SERIES 1100 protecting tubes resist erosion from molten aluminum, zinc or galvanizing baths. They stay strong, even at high temperatures and require no washing or maintenance to prolong their service life. A special protective cap at the tip provides fast response time, permitting thermal expansion without damage to the refractory laminate.

The 0.600 inch I.D. easily accommodates up to an 8-gauge beaded thermocouple and is stocked for immediate shipment. The maximum operating temperature for the SERIES 1100 is 1400°F (745°C).

Order - Part No. Code - Length
Example: 1100-24

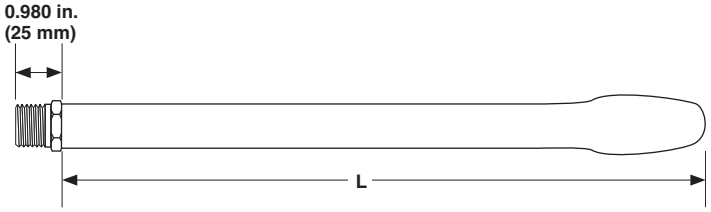

Part No.	I.D. in.	Nominal O.D. in.	Fitting in.	Tube Length in.
1100	0.600	1 1/2 Max.	3/4 NPT	12, 18, 24, 30, 36, 42, 48

SERIES 1101 Protection Thermocouple

Watlow's SERIES 1101 protected thermocouple assemblies incorporate a mineral-insulated stainless steel sheathed XACTPAK® thermocouple hermetically sealed within a refractory laminated SERIES 1100 protection tube. Standard calibration is Type K, complete with 36 inches of high temperature insulated thermocouple wire.

As with the SERIES 1100 protection tube, the SERIES 1101 assembly requires no washing or maintenance to prolong its service life. It delivers fast, accurate readings in molten aluminum, zinc and galvanizing baths.

Order - Part No. Code - Length
Example: 1101-12

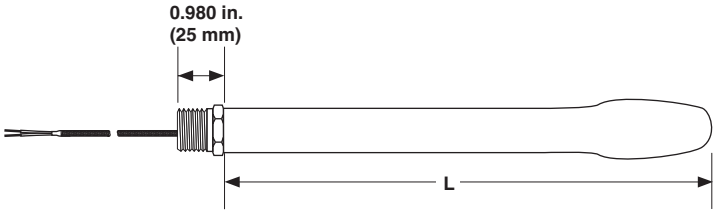

Part No.	Calibration	Nominal O.D. in.	Fitting in.	Lead Length in.	Tube Length in.
1101	K	1 1/2 Max.	3/4 NPT	36	12, 18, 24, 30, 36

Note: All accessories are subject to minimum purchase quantities.

Connectors

Many varieties of thermocouple connectors are available from Watlow®. Watlow's broad offering includes benefits such as high impact strength, fast installation and high temperature capabilities.

Listed below are the various connectors and systems from which to choose:

- Standard thermocouple connectors
- Quick-attach thermocouple connectors
- High temperature connectors
- Three-pole connectors for RTD applications
- Miniature thermocouple connectors

Watlow's standard line of connectors are lightweight, rugged and accurate. Color coded to easily identify calibration type, these connectors also have larger cap screws for easier assembly.

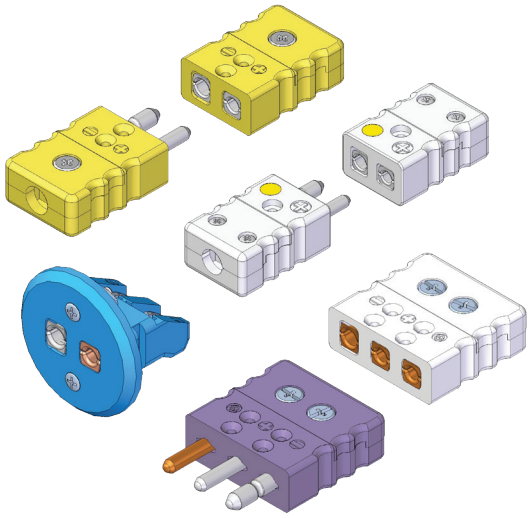

Features and Benefits

ASTM color coded
- Ensures easy identification

Compensated alloys
- Provides accuracy in readings

Glass-filled thermoplastic
- Provides high impact strength

Captive cap screws
- Ensures a secure connection

Connection hardware
- Eliminates several components

Meets requirements for ASTM E1129
- Ensures adequate pin spacing, dimensions and contact resistance

Rated to 425°F (215°C)
- Fits high-temperature applications

Note: All accessories are subject to minimum purchase quantities.

Connectors

"S" SERIES Standard Connectors 425°F (215°C)

Ordering Information

Part Number

① ②	③	④	⑤	⑥ ⑦
	Style	Calibration	Name Plate	Color Code
SC				

③	Style
M =	Male (plug)
F =	Female (jack)

④	Calibration
E =	Type E
J =	Type J
K =	Type K
S =	Type S / Type R
T =	Type T
U =	Uncompensated

⑤	Name Plate
N =	Without name label

⑥ ⑦	Color Code
AT =	ASTM E 230 color code

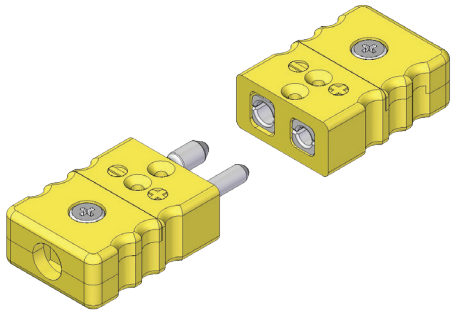

Standard Connector

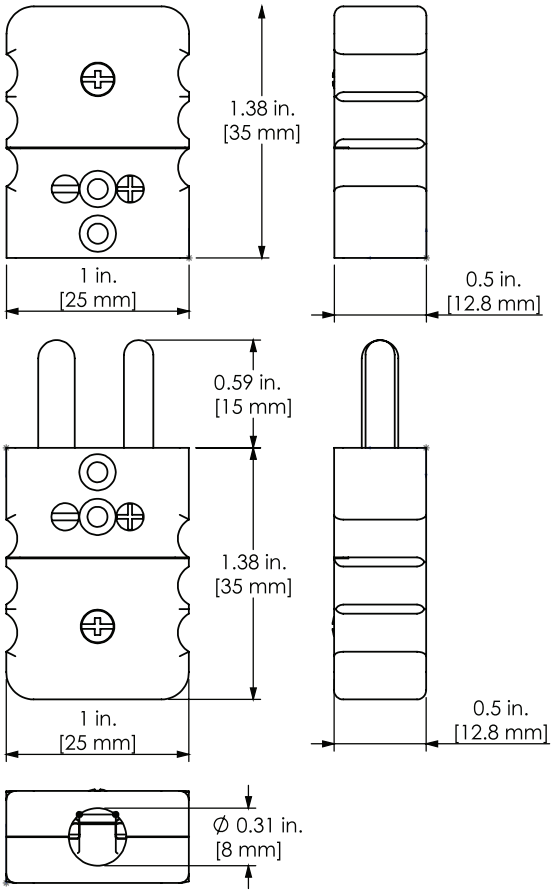

Crimp/Nickel Plated Brass Style

Ordering Information

Part Number

① ② ③	④ ⑤ ⑥
	Style
SAB	

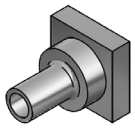

④ ⑤ ⑥	Style
040 =	0.040 in.
063 =	0.063 in.
090 =	0.090 in.
125 =	0.125 in.
188 =	0.188 in.
250 =	0.250 in.
30M =	3.0 mm
60M =	6.0 mm

Cable Clamp Style for Male or Female

Part Number: **SAC-220**

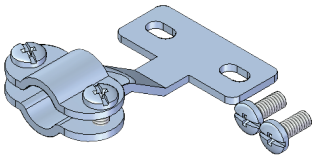

Note: All accessories are subject to minimum purchase quantities.

Connectors

Quick-Attach Thermocouple Connectors, 425° F (215°C)

Watlow's time-saving thermocouple connectors are quick and convenient to use because there are no loose parts and there is no need to remove caps or wrap wires around terminal screws. Stripped wire ends are simply inserted into a plug or jack then tightened with two terminal screws.

Thermocouple connectors accept solid or stranded wires up to 16 gauge, are available in Type J, K and T calibrations and are ASTM E 230 color-coded. The connector is made with high-impact strength, 425°F (215°C) rated glass filled thermoplastic with matching thermocouple materials.

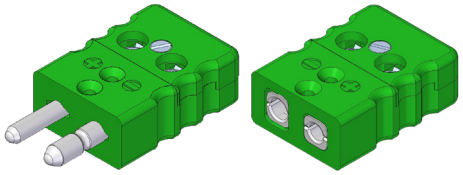

Ordering Information

Part Number

① ②	③	④	⑤	⑥ ⑦	⑧ ⑨ ⑩ ⑪
	Style	Cali-bration	Name Plate	Color Code	Assembly
SK			N	AT	ASSY

③	Style
M =	Male (plug)
F =	Female (jack)

④	Calibration
J =	Type J
K =	Type K
T =	Type T

⑤	Name Plate
N =	Without name label

⑥ ⑦	Color Code
AT =	ASTM E 230 color code

⑧ ⑨ ⑩ ⑪	Assembly
ASSY =	Comes with cap assembly on body

Standard Quick Attach Connector

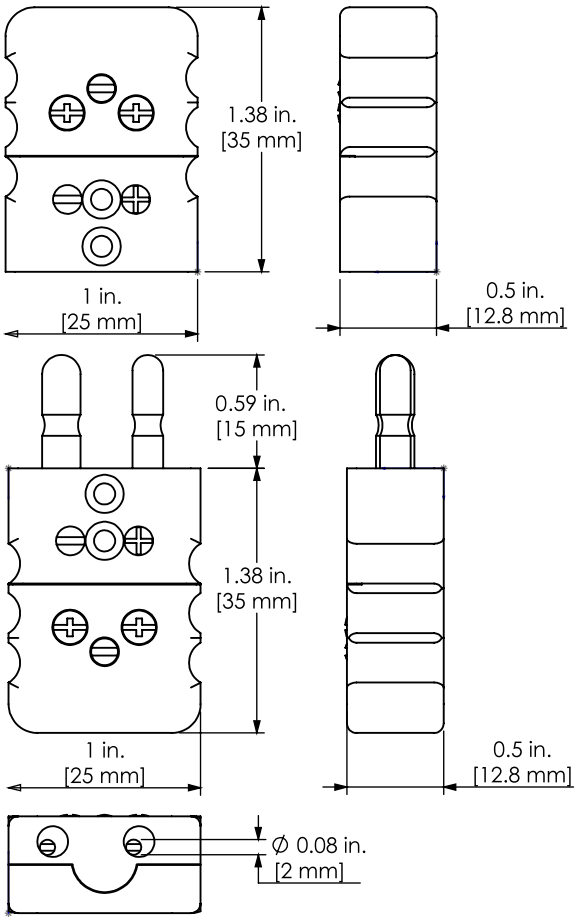

Note: All accessories are subject to minimum purchase quantities.

Connectors

High-Temperature Connectors 1000°F (540°C)

The ASTM E 230 color-coded bodies of these high temperature ceramic connectors are practical for temperatures up to 1000°F (540°C). Colors are permanent and will not fade even after exposure to temperature. The positive-locking screw type terminals are captive for easy assembly. Hollow plug pins and collet inserts are made of thermocouple alloys (except Type R/S, which is compensated).

Calibration must be specified when ordering. Both plug and jack are marked for polarity and standard 7/16 inch pin spacing.

Part Number	Description
912-*	Ceramic plug (specify calibration J, K, R/S or E)
913-*	Ceramic jack (specify calibration J, K, R/S or E)
925-125	XACTPAK® adapter for plug or jack (0.125 inch sheath O.D.)
925-188	XACTPAK adapter for plug or jack (0.188 inch sheath O.D.)
925-250	XACTPAK adapter for plug or jack (0.250 inch sheath O.D.)
926	Cable clamp for ceramic plug or jack

*Insert calibration letter for full part number 912-J

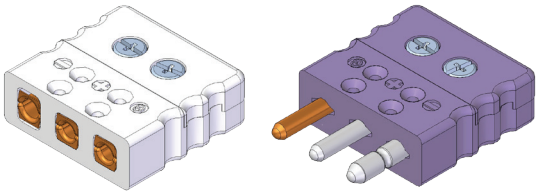

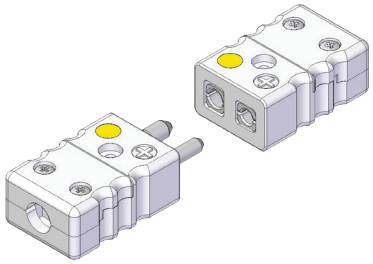

High Temperature Connector

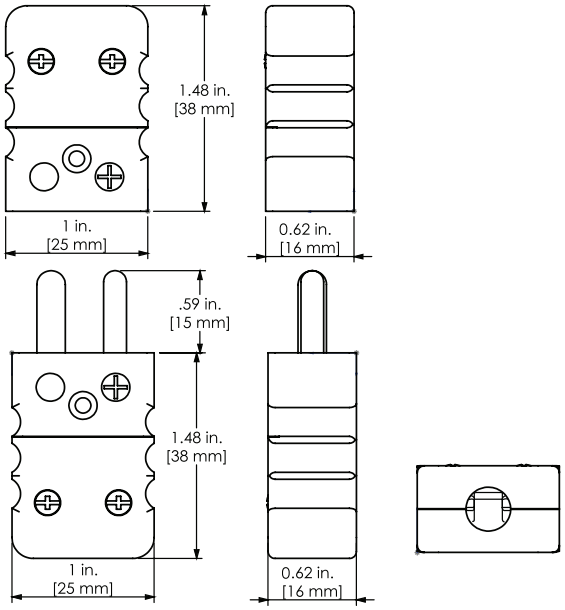

Three-Pole Connectors for RTD Applications, 400ºF (200°C)

- Three pins to accommodate most RTD sensor applications
- Rated up to 400°F (200°C) continuous
- Jacks have spring-loaded inserts for positive contact
- Larger diameter negative pin prevents user from reversing polarity

Part Number	Description
TH-335	3-pole connector plug with copper pins
TH-336	3-pole connector jack with copper inserts
TH-337-125	Compression-type adapter for 0.125 inch tube
TH-337-188	Compression-type adapter for 0.188 inch tube
TH-337-250	Compression-type adapter for 0.250 inch tube
SAC-220	Cable clamp for 3-pole connector

Three-pole Connector

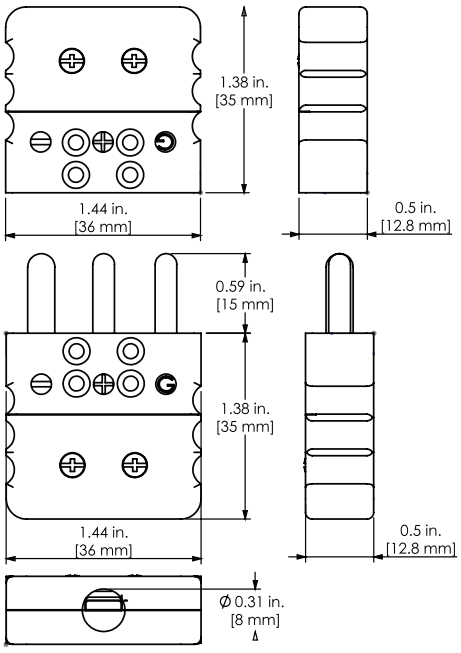

Note: All accessories are subject to minimum purchase quantities.

Connectors

Miniature Thermocouple Connector System, 400°F (200°C)

Watlow's new miniature connector is for both thermocouple and RTD circuits. This connector is suited for small wires or small diameter mineral insulated cables. The connector features a glass filled high quality thermoplastic body that makes for a more rugged and durable connector. Matching thermocouple alloys and spring loaded pin inserts ensure an accurate and strong signal. Captive terminal screws and molded polarity signals make for faster and easier wire termination with less error. Watlow's new miniature plugs and jacks will mate with previous Watlow miniature connectors and any other ANSI spec miniature connector.

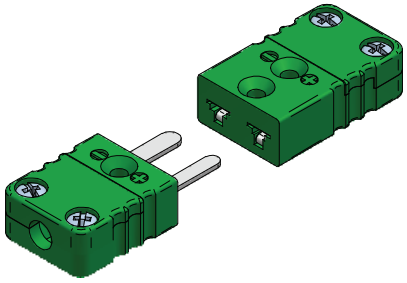

Ordering Information

Part Number

① ②	③ Style	④ Calibration	⑤ Name Plate	⑥ ⑦ Color Code
MC			N	AT

③ Style	
M =	Male (plug)
F =	Female (jack)

④ Calibration	
E =	Type E
J =	Type J
K =	Type K
N =	Type N
R =	Type R
S =	Type S
T =	Type T
U =	Uncompensated

⑤ Name Plate	
N =	Without name

⑥ ⑦ Color Code	
AT =	ASTM E230 color code/uncompensated = white

Accessories

Crimp/Braze Adapter

These adapters are designed for brazing, soldering or crimping on mineral insulated cable or crimping onto insulated wire.

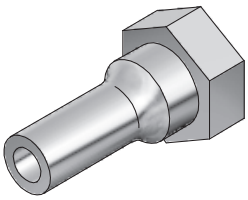

Ordering Information

Part Number

① ② ③	④ ⑤ ⑥ Sheath Size
MHX	

④ ⑤ ⑥ Sheath Size	
032 =	0.032
040 =	0.040
063 =	0.063
125 =	0.125

Grommets

Grommets can be fitted in the entrance hole of the connector to prevent moisture and dirt from entering the connector. All grommets are constructed from silicone with a maximum temperature of 400°F (200°C) and are pre-slit to allow for easy installation. These grommets will compress on the wire once the cover is fitted.

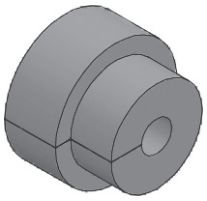

Ordering Information

Part Number	Description
71305601	Grommet with 0.12 in. (3.0 mm) diameter
71305602	Grommet with 0.02 in. (0.5 mm) diameter
71305603	Grommet with 0.06 in. (1.5 mm) diameter

Note: All accessories are subject to minimum purchase quantities.

Connectors

Miniature Thermocouple Connector System, 400°F (200ºC)

Ordering Information

Description	① ② Connector Type	③ Style	④ Available Calibration	⑤ Name Plate	⑥ ⑦ Color Code
Locking connectors that prevent plug and jack separation in high vibration environments	ML	M, F	E, J, K, N, R, S, T, U	N	AT
High temperature connectors rated for 800°F (427°C)	MH	M, F	E, J, K, N, R, S	N	AT*
Three pin connectors for grounded/shielded thermocouples and RTD circuits	MT	M, F	E, J, K, N, R, S, T, U	N	AT
Panel inserts suitable for instrumentation cases	MP	C, R **	J, K, T	N	AT

*High temperature connectors are stamped with the calibration type.
**Panel inserts are available in both circular and rectangular configurations.

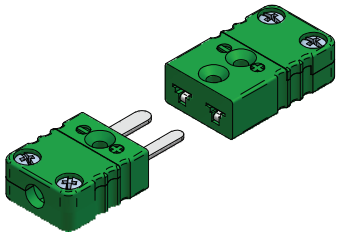

Locking Miniature Connectors

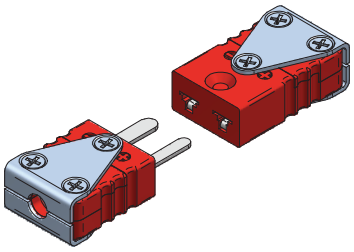

High Temperature Miniature Connectors

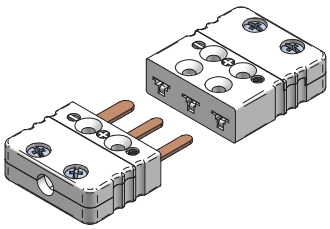

Miniature Three Pin Connectors

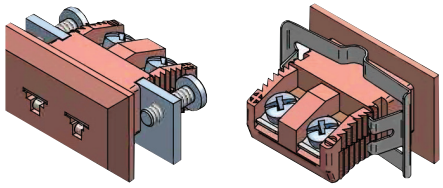

Rectangular Miniature Panel Inserts

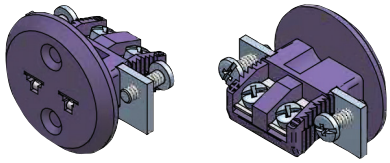

Circular Miniature Panel Inserts

Additional Accessories

Part Number	Description
80441501	Locking clips are a cost effective way to prevent accidental plug and jack separation
80441301	Wire clamp bracket provides optimum strain relief with a large range of maximum and minimum wire diameters

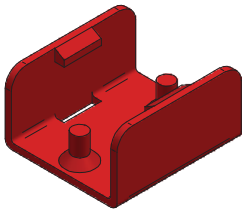

Miniature Connector Locking Clips

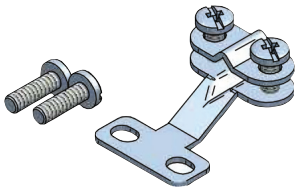

Wire Clamp

For dimensional drawings of all connector types please review Watlow's "Miniature Connector Spec Sheet."

Note: All accessories are subject to minimum purchase quantities.

Connectors

Single Panel Mount Hardware, 425°F (218°C)

Rugged one-body design using thermocouple materials and spring loaded inserts, these units fit panels up to 7/16 inch thick. Panel cutout: 1 1/8 inch to 1 5/32 inch hole. Units fit into standard 3/4 inch knockouts.

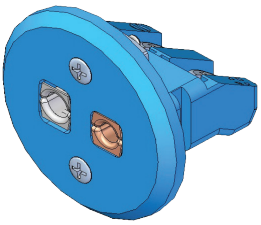

Ordering Information

Part Number

① ② ③	④ Calibration	⑤ Name Plate	⑥ ⑦ Color Code
SKP			

Calibration	
J =	Type J
K =	Type K
T =	Type T

Name Plate	
N =	Without name label

Color Code	
AT =	ASTM E 230 color code/uncompensated = white

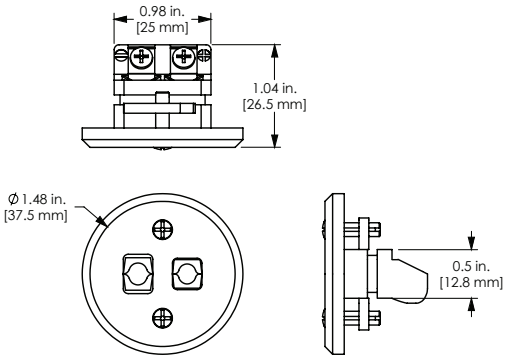

Weather Resistant Boots

Used in pairs as illustrated, these flexible neoprene rubber boots add moisture protection to standard plug-to-jack connections.

Part Number: **943**

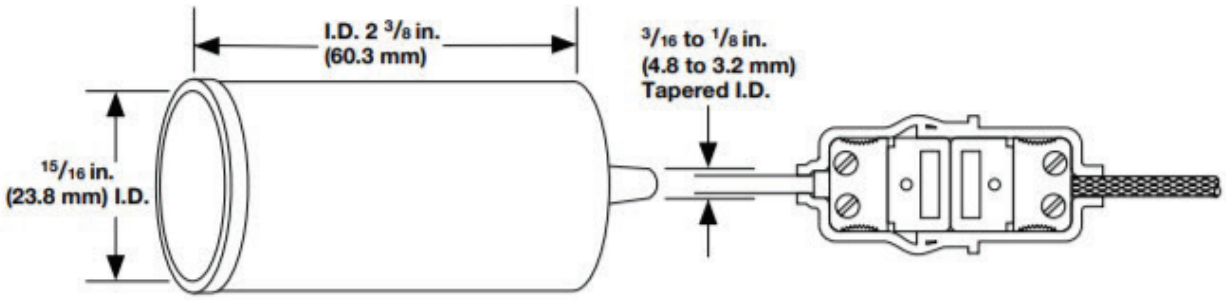

Note: All accessories are subject to minimum purchase quantities.

Connection Heads and Blocks

Standard Thermocouple Connection Heads

(Assembly ordering options D or E)

Watlow's standard heads are made of cast iron or aluminum. A plated chain attaches the gasketed cover to the body. Flats are provided for tightening. The connector block, held in place with two screws, can be single, duplex or triplex. These heads have 1, ¾ or ½ inch NPT openings for protecting tubes or drilled wells. The conduit outlet is ¾ inch NPT. Epoxy coating is available on the aluminum head. Maximum operating temperature is 825°F (441°C). Approved for NEMA 4X, IP66.

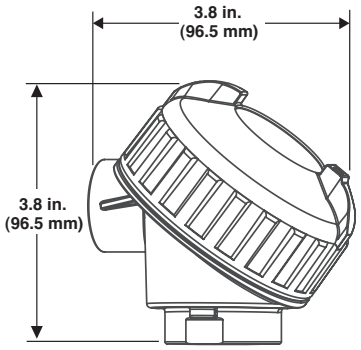

Approximate Assembled Dimensions:
3.8 in. (96.5 mm) H x 3.8 in. (96.5 mm) L x 3.8 in. (96.5 mm) W

Cast Iron Head Only Part No.	Aluminum Head Only Part No.	Sensor Opening (NPT) in.	Conduit Connection in.
70900201	—	1	¾
70900202	—	¾	¾
70900203	**70900301***	½	¾

*Available with epoxy coating (70900302)

Terminal Blocks for Standard Connection Heads

Part No.	Description
50500401	Single element, max. operating temperature 1000°F (540°C)
50500501	Dual, max. operating temperature 1000°F (540°C)
50500601	Triplex, max. operating temperature 1000°F (540°C)

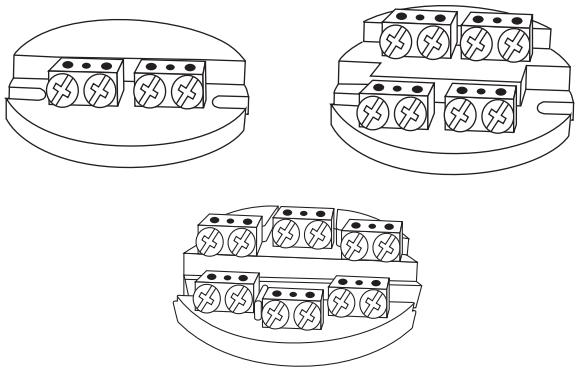

Note: All accessories are subject to minimum purchase quantities.

Connection Heads and Blocks

Explosion Proof Thermocouple Connection Heads

(Assembly ordering option H)

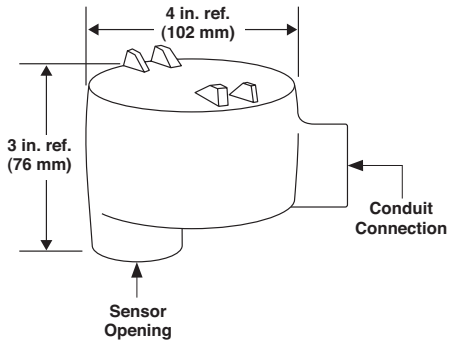

Approximate Assembled Dimensions:
4 in. H x 2 ¼ in. L x 3 in. W

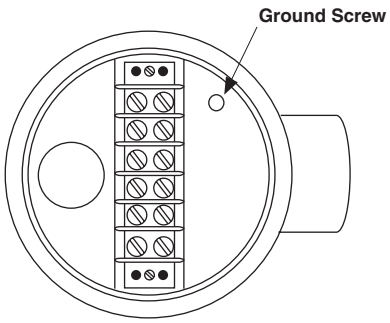

XP Head Shown with TH-615 Block

Part No.	Sensor Opening in.	Conduit Connection in.
XP-11	3/4	3/4
XP-12	1/2	3/4

For hazardous locations. Underwriter's Laboratories Listed Class 1, Groups C, D; Class 2, Groups E, F, G; Class 3, all Groups.

All XP explosion-proof heads use a TH-615 (six terminal) block. **Order separately**.

Also approved for CSA Class I, Groups C and D; Class II, Groups E and F; and Class III.

PT Polypropylene Head and Connector Blocks

(Assembly ordering option C)

The polypropylene head is the answer to many of the corrosion problems facing connection heads. The U.V. stabilized polypropylene head is impervious to practically all corrosive media and is rated for continuous operation up to 220°F (105°C). The PT-20 and PT-30 are colored black and the RT-30-WHT is white.

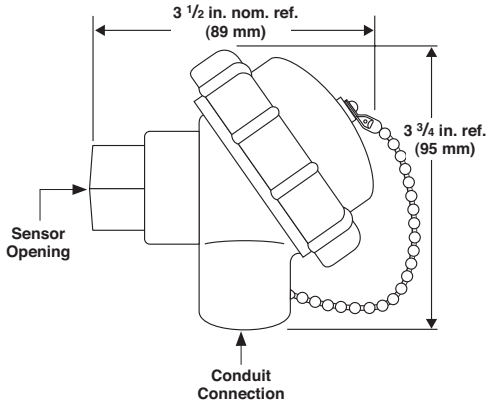

PT Polypropylene Heads

Part No. Head Only	Sensor Opening in.	Conduit Connection in.
PT-20	1/2	1/2
PT-30	1/2	3/4
RT-30-WHT	1/2	3/4

Terminal Blocks for PT Heads

Part No.	Description
50500701	Single element block
50500801	Dual element block

Note: All accessories are subject to minimum purchase quantities.

Transmitters

SERIES 5750

The SERIES 5750 temperature transmitter from Watlow offers remarkably accurate temperature measurement and improves reliability to reduce downtime and costs.

The SERIES 5750 offers new measurements with resistance temperature detectors (RTDs) in three and four-wire connections. It is designed to fit directly inside connection heads type DIN B or larger.

The transmitter is programmed using a separate connection cable and an easy-to-use Windows®-based software program configures the transmitter in seconds.

The SERIES 5750 provides linearization between temperature sensor input signals and the 4-20mA output signal to ensure accurate temperature measurements across a broad range.

Contact Watlow's customer service department to integrate this transmitter into a Watlow Style AR or AT thermocouple sensor or with a Style RR or RT RTD sensor.



Features and Benefits

Accepts three and four-wire RTD and thermocouple sensor inputs

- Standardizes transmitter for various sensors and applications

Designed for harsh conditions

- Withstands high vibration and high humidity applications

Sensor error compensation function

- Provides convenience for adjusting the sensor/transmitter combination, or the transmitter alone, ensuring accurate temperature measurement within a specific range

Large center hole and robust terminals with test connections and low height

- Enables easy mounting

Configuration without external power

- Allows configurations to be edited or read offline by connecting to a personal computer (PC) universal serial bus (USB) port

Easy-to-use Windows® configuration software

- Parameters such as sensor type, measuring range, filter activation, cold junction compensation, sensor failure and error corrections are set in one window

Note: All accessories are subject to minimum purchase quantities.

Transmitters

SERIES 5750

Specifications

Input RTD

- Pt100 (IEC 60751, α = 0.00385)
  -328 to +1832°F (-200 to +1000°C)
- Pt100 (JIS C 1604, α = 0.003916)
  -328 to +1832°F (-200 to +1000°C)
- Pt1000 (IEC 60751, α = 0.00385)
  -328 to +392°F (-200 to +200°C)
- 3-, 4-wire connection
- Sensor current ~ 0.4mA
- Max. sensor wire resistance 25Ω/wire

Input Thermocouples

- Range Type: B, C, E, J, K, N, R, S, T
- Max. sensor wire resistance 500Ω (total loop)

Monitoring

- Sensor failure monitoring upscale or downscale action

Adjustments

- Zero adjustments for all inputs at any value within temperature range limits
- Min. spans: Pt input 18°F (10°C)
  T/C 2mV

Output

- Analog 4-20mA, temperature linear
- Resolution 5µA
- Min. output signal measurement/failure 3.8mA/3.5mA
- Max. output signal measurement/failure 20.5mA/21.6mA
- Permissible load, see load diagram 725Ω @ 24VDC

Temperature

- Ambient, storage and operation
  -40 to +185°F (-40 to +85°C)

General Data

- Selectable dampening time ~ 2s
- Update time ~ 1.5s
- Isolation in - out non-isolated
- Humidity 0 to 100% RH
- Vibration acc. to IEC 60068-2-6, test Fc, 60-500Hz, 10g
- Output limitations and fail currents are NAMUR compliant

Power Supply

- Polarity protected
- Supply voltage 8 to 32VDC
- Permissible ripple 4V p-p @ 50/60Hz

Accuracy

- Linearity RTD ±0.1%①
  T/C ±0.2%①
- Calibration RTD max. of ±0.4°F / ±0.2°C or ±0.1%①
  T/C max. of ±20µV or ±0.1%①
- Cold junction compensation (CJC) T/C ±0.9°F (±0.5°C)
- Temperature influence③ All inputs max. of ±0.25°C/25°C or ±0.25%/25°C①②
- Max. of ±0.5°F/50°F or ±0.28%/50°F①②

Housing

- Material, Flammability (UL®) PC/ABS + PA, V0
- Mounting DIN B-head or larger, DIN rail (with mounting kit)
- Connection single/stranded wires max. 1.5 mm², AWG 16
- Weight 32g
- Protection, housing / terminals IP 65/IP 00

①Of input span

②If zero-deflection >100% of input span: add 0.125% of input span/25°C or 0.14% of input span/50°F per 100% zero-deflection

③Reference temperature 68°F (20°C)

Input Connections

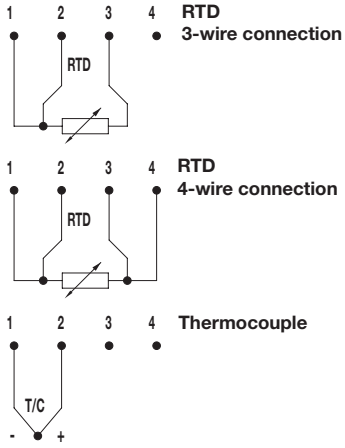

Output Connections

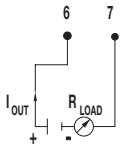

Dimensional Drawing

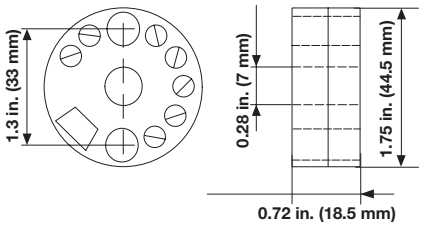

Note: All accessories are subject to minimum purchase quantities.

Transmitters

SERIES 5750

Ordering Information

Part Number

①②③④ SERIES	⑤ Sensor Type	⑥ Low Temp. Sign	⑦⑧⑨ Low Temp.	⑩ High Temp. Sign	⑪⑫⑬⑭ High Temp.	⑮ Unit of Measure
5750						

①②③④	SERIES
5750 =	Linearized T/C or RTD

⑤		Sensor Type
B	=	Type B T/C
C	=	Type C T/C
E	=	Type E T/C
J	=	Type J T/C
K	=	Type K T/C
N	=	Type N T/C
R	=	Type R T/C
S	=	Type S T/C
T	=	Type T T/C
0	=	PT100 (IEC 60751, α = 0.00385) 3-wire
1	=	PT100 (JIS C 1604, α = 0.003916) 3-wire
2	=	PT100 (IEC 60751, α = 0.00385) 4-wire
3	=	PT100 (JIS C 1604, α = 0.003916) 4-wire
4	=	PT1000 (IEC 60751, α = 0.00385) 3-wire
5	=	PT1000 (IEC 60751, α = 0.00385) 4-wire

⑥ Low Temperature Sign
Enter + or - sign

⑦⑧⑨ Low Temperature
Enter lower limit temperature required

⑩ High Temperature Sign
Enter + or - sign

⑪⑫⑬⑭ High Temperature
Enter higher limit temperature required

⑮ Unit of Measure
Enter °F or °C

Program cable and software part #5750-CABLE (required for optional future changes)

Note: All accessories are subject to minimum purchase quantities.

Transmitters

SERIES 5950

The SERIES 5950 temperature transmitter from Watlow offers remarkably accurate temperature measurement and improves reliability to reduce downtime and costs.

The SERIES 5950 is a universal, isolated, temperature transmitter with additional voltage and resistance input. Its robust design and high quality gives excellent performance and accuracy under harsh conditions.

The SERIES 5950 supports communication via NFC® (Near-field communication) and Bluetooth®, which makes it possible to configure and monitor the transmitter remotely.

The transmitter is programmed using a separate connection cable and an easy-to-use Windows®-based software program to configure the transmitter in seconds.

The SERIES 5950 provides linearization between temperature sensor input signals and the 4-20mA output signal to ensure accurate temperature measurements across a broad range.

Contact Watlow's customer service department to integrate this transmitter into a Watlow Style AR or AT thermocouple sensor or with a Style RR or RT RTD sensor.



Features and Benefits

Accepts RTD, thermocouple, mV and resistance inputs

- Standardizes transmitter for various sensors and applications

Designed for harsh conditions

- Withstands high vibration (tested for 10g vibrations) and high humidity applications

Sensor error compensation function

- Provides convenience for adjusting the sensor/transmitter combination, or the transmitter alone, ensuring accurate temperature measurement within a specific range

Large center hole and robust terminals with test connections and low height

- Enables easy mounting

Configuration without external power

- Allows configurations to be edited or read offline by connecting to a personal computer (PC) universal serial bus (USB) port or NFC without power

Easy-to-use Windows® configuration software

- Parameters such as sensor type, measuring range, filter activation, cold junction compensation, sensor failure and error corrections are set in one window

Password protection and date of changes logged

- Increases level of security

Hour counter

- Enables monitoring of elapsed operational time

Note: All accessories are subject to minimum purchase quantities.

Transmitters

SERIES 5950

Specifications

Input RTD

- Pt100 (IEC 60751, α = 0.00385)
  -328 to +1562°F (-200 to +850°C)
- Pt100 (JIS C 1604, α = 0.003916)
  -328 to +1562°F (-200 to +850°C)
- Pt1000 (IEC 60751, α = 0.00385)
  -328 to +392°F (-200 to +200°C)
- 2-, 3-, 4-wire connection

Input Thermocouples

- Range Type: B, C, E, J, K, N, R, S, T

Input Resistance / Potentiometer

- 0 to 10000Ω / 100 to 10000Ω

Input mV

- -10 to +1000mV

Monitoring

- Sensor failure monitoring upscale or downscale action

Adjustments

- Zero adjustments for all inputs at any value within temperature range limits
- Min. spans: Pt input 18°F (10°C)
  T/C 2mV

Output

- Analog 4-20mA, temperature linear
- Resolution 5µA
- Min. output signal measurement/failure 3.8mA/3.5mA
- Max. output signal measurement/failure 20.5mA/21.6mA
- Permissible load, see load diagram 725Ω @ 24VDC

Temperature

- Ambient, storage and operation
  -40 to +185°F (-40 to +85°C)

General Data

- Selectable dampening time ~ 2s
- Update time ~ 1.5s
- Isolation in - out non-isolated
- Humidity 0 to 100% RH
- Vibration acc. to IEC 60068-2-6, test Fc, 60-500Hz, 10g
- Output limitations and fail currents are NAMUR compliant

Power Supply

- Polarity protected
- Supply voltage 8 to 36VDC
- Permissible ripple 4V p-p @ 50/60Hz

Typical Accuracy

- +/- 0.08C or +/-0.08% of Span

Intrinsic Safety

- ATEX: II 1 G Ex ia IIC T6... T4 Ga
- IECEx: Ex ia IIC T6... T4 Ga
- FM US: CL I, Div 1, GP A, B, C and D/CL I, Zn 0, Ex ia IIC Ga
- FM CA: CL I, Div 1, GP A, B, C and D/CL I, Zn 0, Ex ia IIC Ga

Housing

- Material, Flammability (UL®) PC/ABS + PA, V0
- Mounting DIN B-head or larger, DIN rail (with mounting kit)
- Connection single/stranded wires max. 1.5 mm², AWG 16
- Weight 32g
- Protection, housing / terminals IP 65/IP 00

Input Connections

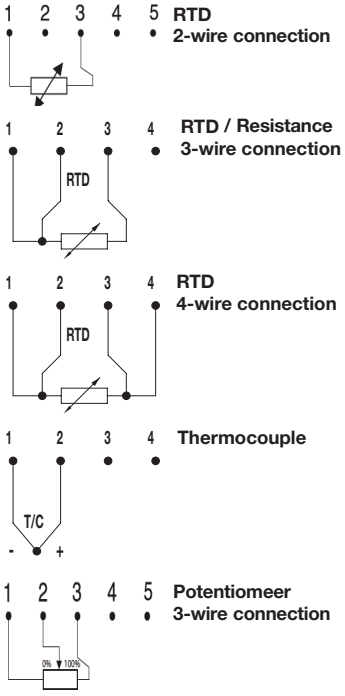

Output Connections

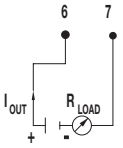

Dimensional Drawing

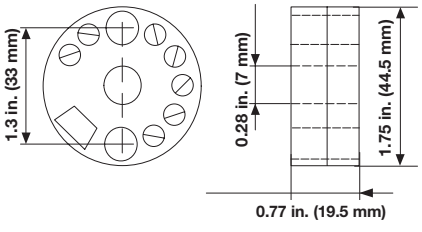

Transmitters

SERIES 5950

Ordering Information

Part Number

①②③④ SERIES	⑤ Sensor Type	⑥ Low Temp. Sign	⑦ ⑧ ⑨ Low Temp.	⑩ High Temp. Sign	⑪ ⑫ ⑬ ⑭ High Temp.	⑮ Unit of Measure
5950						

①②③④	SERIES
5950 =	Linearized T/C or RTD

⑤	Sensor Type
B =	Type B T/C
C =	Type C T/C
E =	Type E T/C
J =	Type J T/C
K =	Type K T/C
N =	Type N T/C
R =	Type R T/C
S =	Type S T/C
T =	Type T T/C
M =	mV
0 =	PT100 (IEC 60751, α = 0.00385) 3-wire
1 =	PT100 (JIS C 1604, α = 0.003916) 3-wire
2 =	PT100 (IEC 60751, α = 0.00385) 4-wire
3 =	PT100 (JIS C 1604, α = 0.003916) 4-wire
4 =	PT1000 (IEC 60751, α = 0.00385) 3-wire
5 =	PT1000 (IEC 60751, α = 0.00385) 4-wire
6 =	Ni 100 (DIN 43760), Ni 120 (Edison no.7)
7 =	Ni 1000 (DIN 43760)
8 =	Cu 10 (Edison no.15)
9 =	0 to 10000Ω / 100 to 10000Ω

⑥ Low Temperature Sign
Enter + or - sign

⑦ ⑧ ⑨ Low Temperature
Enter lower limit temperature required

⑩ High Temperature Sign
Enter + or - sign

⑪ ⑫ ⑬ ⑭ High Temperature
Enter higher limit temperature required

⑮ Unit of Measure
Enter °F or °C

Programming module with USB cable kit part number 2223-1400 and free downloadable software required for any future program changes.

Note: All accessories are subject to minimum purchase quantities.

Transmitters

System Components

Typical Wiring Diagrams for Two-Wire Signal Conditioners

Controller or PLC with 4-20mA Input

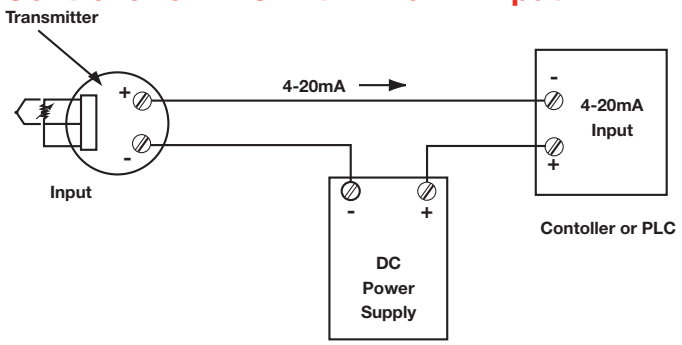

Controller or PLC with 1 to 5 Volt Input

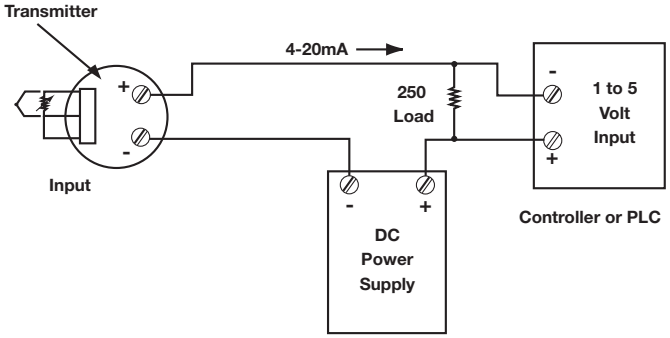

Controller or PLC with Integral Power Supply

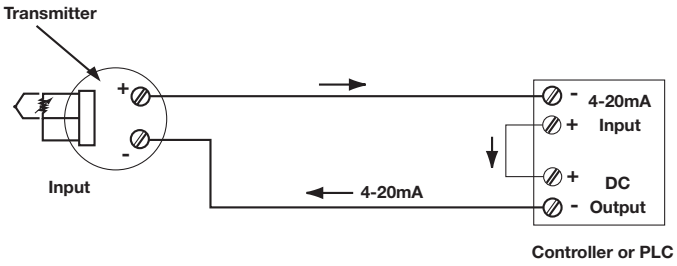

Transmitter and Connection Head Mounting Options

Signal Conditioner Model and Description	Connection Heads			
	Cast Aluminum	Cast Iron	Explosion XP SERIES	Poly Heads Pt SERIES
5750, Non-isolated, Non-linearized	Mount with kit **81501901**	Does not fit	Mount with kit **81501301**	Mount with kit **81501201**
5900, 5901 and 5902, Isolated, Linearized	Mount with kit **81501901**	Does not fit	Mount with kit **81501301**	Mount with kit **81501201**

Note: All accessories are subject to minimum purchase quantities.

Product	Description	Page
Thermocouple and Extension Wire	Single pairs of thermocouple conductors are available using a variety of insulation materials. Matched pairs with duplex insulation are color coded according to ANSI MC 96.1-1982 requirements. The operating temperature rating for thermocouple and extension wire is up to 2600°F (1427°C).	**114**
RTD Lead Wire	Nickel or tin plated two, three and four-wire copper conductor constructions are available in a variety of gauge sizes. All types are twisted to achieve maximum reduction of electromagnetic interferences, are available with PVC, FEP, PFA or fiberglass insulations and are color coded according to ANSI requirements.	**145**

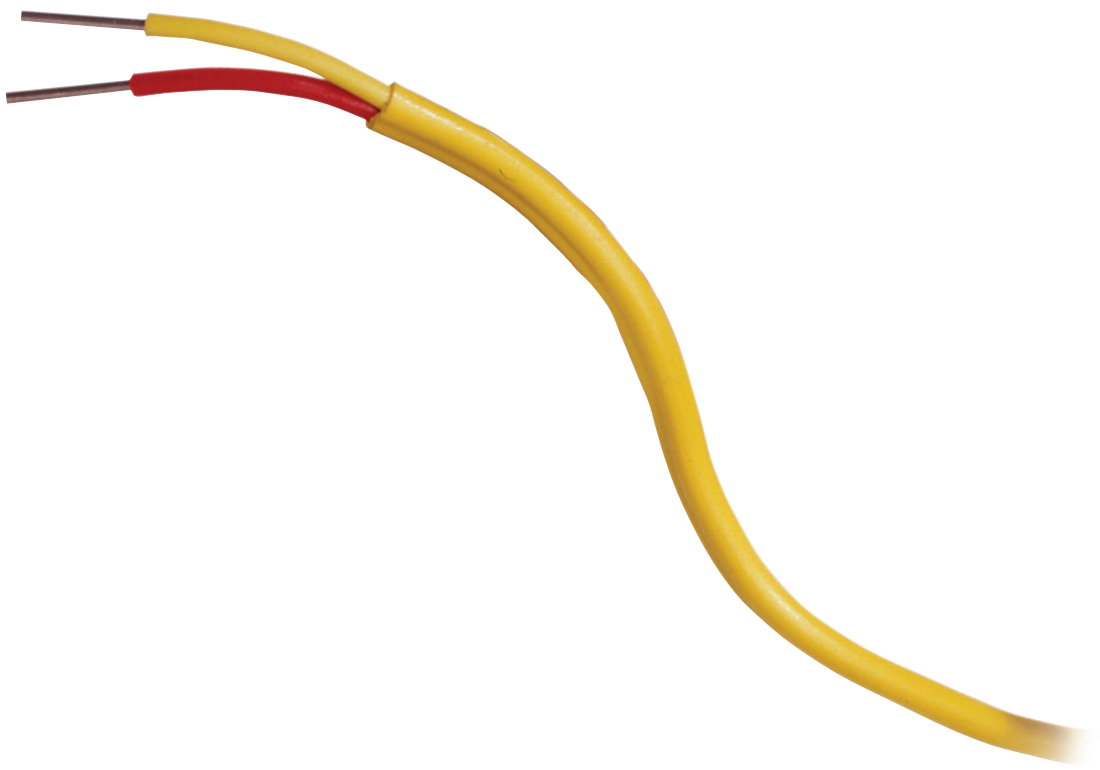

General Information

Thermocouple and Extension Wire Color Codes

United States and International Color Coding

Standard ASTM E 230 color coding (United States) is used on all insulated thermocouple wire and extension wire when insulation type permits. In color coding, the right is reserved to include a tracer to identify the ASTM E 230 type. Thermocouple grade wire normally has a brown overall jacket. For Types R and S, the color codes correlate to the compensating cable normally used.

Various national and international standard agencies have adopted color codes for identifying thermocouples, which generally differ from those specified in ASTM E 230. The overall extension color code is also used to identify connectors to specific thermocouple types.

Thermocouple and Extension Wire Color Codes

Overall/Positive (+)/Negative (-)

ANSI Code	ANSI/ASTM T/C	ASNI/ASTM Extension	BS 1843 (Britain)	DIN 43714 (Germany)	JIS C1610-1981 (Japan)	IEC 584-3 (Europe)
B (overall) BP BN	— — —	Gray + Gray - Red	— — —	— — —	Gray + Red - White	— — —
E (overall) EP EN	Brown + Purple - Red	Purple + Purple - Red	Brown + Brown - Blue	Black + Red - Black	Purple + Red - White	Violet + Violet - White
J (overall) JP JN	Brown + White - Red	Black + White - Red	Black + Yellow - Blue	Blue + Red - Blue	Yellow + Red - White	Black + Black - White
K (overall) KP KN	Brown + Yellow - Red	Yellow + Yellow - Red	Red + Brown - Blue	Green + Red - Green	Blue + Red - White	Green + Green - White
N (overall) NP NN	Brown + Orange - Red	Orange + Orange - Red	Orange + Orange - Blue	— — —	— — —	Pink + Pink - White
R (overall) RP RN	— — —	Green + Black - Red	Green + White - Blue	White + Red - White	Black + Red - White	Orange + Orange - White
S (overall) SP SN	— — —	Green + Black - Red	Green + While - Blue	White + Red - White	Black + Red - White	Orange + Orange - White
T (overall) TP TN	Brown + Blue - Red	Blue + Blue - Red	Blue + White - Blue	Brown + Red - Brown	Brown + Red - White	Brown + Brown - White

Thermocouple and Extension Wire

Manufactured to Exact Specifications

Since 1914, SERV-RITE® thermocouple wire and thermocouple extension wire have been recognized for premium performance and reliability. All stock and custom wire is manufactured in Watlow's plant where materials, manufacturing equipment and quality controls are carefully selected to ensure superior uniformity.

Watlow® offers popular wires as well as custom manufactured wire using alloys and insulation types to meet specific application demands.

All SERV-RITE thermocouple wire and thermocouple extension wire is manufactured under rigid quality controls following ISO 9001 standards. In addition, all electromotive force (EMF) versus temperature calibration procedures follow one or more of the following standards:

- ASTM E 207
- ASTM E 220
- AMS 2750

All testing has NIST traceability. Unless otherwise specified, all SERV-RITE thermocouple wire and extension wire are supplied to meet standard tolerances of ASTM E 230. Special tolerances are also available.

Performance Capabilities

- Compliance with recognized agency tolerances
- Insulation temperature ranges from -328 to 1300°F (-200 to 704°C)
- Tolerances from ±0.5°C or ±0.4 percent
- NIST calibration certificates
- ISO 17025 Accredited Lab



Features and Benefits

Type E, J, K, N, S and T thermocouple wire
- Fit virtually all applications

Compensation extension wire
- Permits fine tuning of temperature measuring circuits

Solid or stranded wire
- Meets specific application requirements

Wide selection of insulation types
- Meets temperature, chemical, moisture and abrasion resistance objectives

Color coding
- Complies with United States, United Kingdom, German, Japanese and IEC standards

Metallic overbraids and wraps
- Enhance abrasion resistance

Stock RTD lead wire
- Meets virtually all industrial RTD applications

Thermocouple and Extension Wire

Stock Wire Products by Temperature

STOCKED FOR SAME DAY SHIPMENT

Thermocouple Wire Max. Opr. Temp.		Insulation	Part Number	Limits of Error	Description	Physical Properties		
°F	°C					Abrasion Resistance	Moisture Resistance	Chemical Resistance
1652	900	High Temp. Fiberglass	J20-1-314	Standard	Brd. HT Gls./TW	Good	Good	Good
			J20-2-321	Special	Brd. HT Gls./Brd. HT Gls.	Good	Good	Good
			K20-1-321	Standard	Brd. HT Gls./Brd. HT Gls.	Good	Good	Good
			K20-2-314	Special	Brd. HT Gls./TW	Good	Good	Good
			K20-2-321	Special	Brd. HT Gls./Brd. HT Gls.	Good	Good	Good
1000	538	Standard Fiberglass	J20-1-304	Standard	Brd. Gls./Brd. Gls.	Fair	Good	Good
			J20-1-S-304	Standard	Brd. Gls./Brd. Gls.	Fair	Good	Good
			J20-2-304	Special	Brd. Gls./Brd. Gls.	Fair	Good	Good
			J20-3-304	Standard	Brd. Gls./Brd. Gls.	Fair	Good	Good
			J20-3-S-304	Standard	Brd. Gls./Brd. Gls./SS Brd.	Fair	Good	Good
			J24-1-304	Standard	Brd. Gls./Brd. Gls.	Fair	Good	Good
			J24-2-304	Special	Brd. Gls./Brd. Gls.	Fair	Good	Good
			J24-3-304	Standard	Brd. Gls./Brd. Gls.	Fair	Good	Good
			J28-2-305	Special	Wrp. Dbl. Gls./Brd. Gls.	Fair	Good	Good
			J30-1-305	Standard	Wrp. Dbl. Gls./Brd. Gls.	Fair	Good	Good
			J30-2-305	Special	Wrp. Dbl. Gls./Brd. Gls.	Fair	Good	Good
			K20-1-304	Standard	Brd. Gls./Brd. Gls.	Fair	Good	Good
			K20-1-S-304	Standard	Brd. Gls./Brd. Gls.	Fair	Good	Good
			K20-2-304	Special	Brd. Gls./Brd. Gls.	Fair	Good	Good
			K20-3-304	Standard	Brd. Gls./Brd. Gls.	Fair	Good	Good
			K20-3-S-304	Standard	Brd. Gls./Brd. Gls./SS Brd.	Fair	Good	Good
			K24-1-304	Standard	Brd. Gls./Brd. Gls.	Fair	Good	Good
			K24-2-304	Special	Brd. Gls./Brd. Gls.	Fair	Good	Good
			K24-3-304	Standard	Brd. Gls./Brd. Gls.	Fair	Good	Good
			K28-2-305	Special	Wrp. Dbl. Gls./Brd. Gls.	Fair	Good	Good
			K30-1-305	Standard	Wrp. Dbl. Gls./Brd. Gls.	Fair	Good	Good
			K30-2-305	Special	Wrp. Dbl. Gls./Brd. Gls.	Fair	Good	Good
			T20-1-304	Standard	Brd. Gls./Brd. Gls	Fair	Good	Good
800	427	Polyimide Tape	J20-3-512	Standard	Tp. P-mide/Tp. P-mide	Excellent	Excellent	Excellent
			J24-2-511	Special	Tp. P-mide/TW	Excellent	Excellent	Excellent
			K20-3-512	Standard	Tp. P-mide/Tp. P-mide	Excellent	Excellent	Excellent
600	316	TFE Tape	J20-2-508	Special	Tp. TFE/Tp. TFE	Good	Excellent	Excellent
			J24-2-508	Special	Tp. TFE/Tp. TFE	Good	Excellent	Excellent
			K20-2-508	Special	Tp. TFE/Tp. TFE	Good	Excellent	Excellent
			K24-1-508	Standard	Tp. TFE/Tp. TFE	Good	Excellent	Excellent
			K24-2-508	Special	Tp. TFE/Tp. TFE	Good	Excellent	Excellent
			T20-2-508	Special	Tp. TFE/Tp. TFE	Good	Excellent	Excellent
			T24-1-508	Standard	Tp. TFE/Tp. TFE	Good	Excellent	Excellent
			T24-2-508	Special	Tp. TFE/Tp. TFE	Good	Excellent	Excellent

CONTINUED

***Note:** The recommended operating temperature is limited to the extension grade alloy recommended temperature of 400°F (204°C).

Thermocouple and Extension Wire

Stock Wire Products by Temperature *(Continued)*

STOCKED FOR SAME DAY SHIPMENT

Thermocouple Wire Max. Opr. Temp.		Insulation	Part Number	Limits of Error	Description	Physical Properties		
°F	°C					Abrasion Resistance	Moisture Resistance	Chemical Resistance
500	260	FEP	J20-2-507	Special	FEP/FEP	Excellent	Excellent	Excellent
			J20-3-507	Standard	FEP/FEP	Excellent	Excellent	Excellent
			J20-5-509*	Standard	FEP/TWS/FEP	Excellent	Excellent	Excellent
			J24-2-507	Special	FEP/FEP	Excellent	Excellent	Excellent
			J24-3-507	Standard	FEP/FEP	Excellent	Excellent	Excellent
			J30-2-506	Special	FEP/FEP	Excellent	Excellent	Excellent
			K16-5-509*	Standard	FEP/TWS/FEP	Excellent	Excellent	Excellent
			K20-1-507	Standard	FEP/FEP	Excellent	Excellent	Excellent
			K20-2-507	Special	FEP/FEP	Excellent	Excellent	Excellent
			K20-2-509	Special	FEP/TWS/FEP	Excellent	Excellent	Excellent
			K20-3-507	Standard	FEP/FEP	Excellent	Excellent	Excellent
			K20-3-S-507	Standard	FEP/FEP/SSBRD	Excellent	Excellent	Excellent
			K20-5-507*	Standard	FEP/FEP	Excellent	Excellent	Excellent
			K20-5-509*	Standard	FEP/TWS/FEP	Excellent	Excellent	Excellent
			K24-1-507	Standard	FEP/FEP	Excellent	Excellent	Excellent
			K24-2-507	Special	FEP/FEP	Excellent	Excellent	Excellent
			K24-3-507	Standard	FEP/FEP	Excellent	Excellent	Excellent
			K30-2-506	Special	FEP/FEP	Excellent	Excellent	Excellent
			T20-2-507	Special	FEP/FEP	Excellent	Excellent	Excellent
			T20-3-507	Standard	FEP/FEP	Excellent	Excellent	Excellent
			T24-2-507	Special	FEP/FEP	Excellent	Excellent	Excellent
			T30-2-506	Special	FEP/FEP	Excellent	Excellent	Excellent

CONTINUED

***Note:** The recommended operating temperature is limited to the extension grade alloy recommended temperature of 400°F (204°C).

Thermocouple and Extension Wire

Stock Wire Products by Temperature *(Continued)*

STOCKED FOR SAME DAY SHIPMENT

Thermocouple Wire Max. Opr. Temp.		Insulation	Part Number	Limits of Error	Description	Physical Properties		
°F	°C					Abrasion Resistance	Moisture Resistance	Chemical Resistance
221	105	PVC	J16-5-502*	Special	FEP/FEP	Good	Excellent	Good
			J16-5-510*	Standard	FEP/FEP	Good	Excellent	Good
			J20-5-502*	Standard	FEP/TWS/FEP	Good	Excellent	Good
			J20-5-510*	Special	FEP/FEP	Good	Excellent	Good
			J20-7-502*	Standard	FEP/FEP	Good	Excellent	Good
			J20-7-510*	Special	FEP/FEP	Good	Excellent	Good
			J24-2-505	Standard	FEP/TWS/FEP	Good	Excellent	Good
			K16-5-502*	Standard	FEP/FEP	Good	Excellent	Good
			K16-5-510*	Special	FEP/FEP	Good	Excellent	Good
			K20-5-502*	Special	FEP/TWS/FEP	Good	Excellent	Good
			K20-5-510*	Standard	FEP/FEP	Good	Excellent	Good
			K20-7-502*	Standard	FEP/FEP/SSBRD	Good	Excellent	Good
			K20-7-510*	Standard	FEP/FEP	Good	Excellent	Good
			K24-1-505	Standard	FEP/TWS/FEP	Good	Excellent	Good
			K24-2-505	Standard	FEP/FEP	Good	Excellent	Good
			S20-5-502*	Special	FEP/FEP	Good	Excellent	Good
			T20-5-502*	Standard	FEP/FEP	Good	Excellent	Good
			T20-5-510*	Special	FEP/FEP	Good	Excellent	Good
			T20-7-502*	Special	FEP/FEP	Good	Excellent	Good
			T24-1-505	Standard	FEP/FEP	Good	Excellent	Good
			T24-2-505	Special	FEP/FEP	Good	Excellent	Good
RTD Lead Wire								
1000	538	Standard Fiberglass	RT3-24-8-705	N/A	Brd. Gls./TW/Brd. Gls.	Fair	Good	Good
500	260	FEP	RT3-22-8-704	N/A	FEP/TW/FEP	Excellent	Excellent	Excellent
221	105	PVC	RT3-22-4-701	N/A	PVC/TW/PVC	Good	Excellent	Good

***Note:** The recommended operating temperature is limited to the extension grade alloy recommended temperature of 400°F (204°C).

Thermocouple and Extension Wire

Ordering Information

How to Order

Include the following information when ordering SERV-RITE thermocouple and extension wire:

Calibration
- E, J, K, N, S or T

Gauge size
- AWG gauge

Solid or stranded conductors
- Stranded conductors are seven strand constructions. If other configurations are required, please contact the factory.

Thermocouple or extension grade
- Determine if it will be used for the actual sensor or only to “extend” the signal at lower temperatures.

Standard or special limits of error
- This will determine the accuracy of the sensor. Limits of error are determined by testing at a pre-defined Watlow standard test point. To guarantee limits of error at other temperature points, please contact the factory to arrange special testing.

Insulation on singles and duplex
- The insulation material used is usually chosen to fit the environment where the sensor will be used.

Color coding
- Unless specified, all color coding is to ASTM E 230 standards.

Spool lengths
- Spool length requirements should be specified. Watlow strives to maintain a policy of shipping 1,000 foot spools. However, if not specified, random lengths may be shipped. If special packaging is required, please contact the factory.

Variation in quantity
- Watlow follows the industry standard of shipping and invoicing at plus or minus 10% of the cost for any ordered item. If requirements dictate anything other than plus or minus 10%, contact the factory for potential additional charges.

Overbraid options
- Options for overbraid are shown below.

Overbraid selection code
- S–Stainless steel wire braid

  C–Tinned copper wire braid

  N–Alloy 600 wire braid

Options are listed on each page. Special requirements and testing are available at additional cost. Contact the factory for details. These include:

Shielding
- Some constructions are available with shielding possibilities.

Calibration tests
- If calibration is required, please specify temperatures.

Certificate of compliance
- These may be provided for various specifications. When ordering, please provide specification requirements.

Special requirements
- Please contact the factory for any requirements not listed above.

Availability

Stock constructions: Many constructions are available for same day shipment.

Stock constructions with options: Shipment is usually within five working days or less.

Stock constructions requiring calibration or other laboratory services: Shipment is usually within five working days or less.

Thermocouple and Extension Wire

Technical Data

How to Select Wire to Meet Requirements

The following information will explain some of the nomenclature associated with thermocouple wire and thermocouple extension wire. By reading this information, orders can be placed quickly and accurately.

Thermocouple Wire or Thermocouple Extension Wire

There are some significant differences between wire used to actually measure temperature and wire used to carry a millivoltage signal to an instrument.

The most obvious difference is the color-code used to identify the wire itself. In most instances, thermocouple grade wire is identified by its overall brown color. Exceptions in the SERV-RITE wire product line are the very high temperature yarns such as those used in the SERIES 301 and 350. Of course, the overall color code is not used if there is no overall covering, as in SERV-RITE wire SERIES 505, 511 and 314.

The functional differences between the two wires are that thermocouple "extension" wire is not calibrated above 400°F (204°C). The temperature rating of the insulations used on some extension grade wire exceeds 400°F (204°C) temperature to allow the wire to survive occasional contact with hot parts or furnace walls.

Terms used in the tables of this section:

Single Conductor Insulation

Identifies insulation type used on individual thermoelements. Certain part numbers use a combination of insulations. When there is a combination, insulations are listed in order of application.

Duplex Conductor Insulation

Lists the overall insulation when one is used. Constructions which have no overall insulation use this area to describe the duplexing method—i.e. twisting, "ripcord," etc.

Temperature Rating

Most constructions are rated for both continuous use and for single reading applications. Continuous use temperature is considered to be the highest temperature a particular construction will survive indefinitely. The single reading temperature is the highest temperature at which the construction will perform and continue to produce an accurate reading. However, after exposure to the single reading temperature, the wire will exhibit less flexibility and/or abrasion resistance. Therefore, it is not likely that the wire could be removed from the application and then reused.

ASTM E 230 Color Code

Generally, SERV-RITE wire has color codes wherever possible. Exceptions are high temperature yarn constructions such as the SERIES 301 and 350. Color coding of the SERIES 511 and 512 is accomplished by including a colored thread or "tracer" under the tape.

Physical Properties

Abrasion Resistance is rated fair, good or excellent and is based on the wall thickness of the construction and how well it survives with other insulations of similar thicknesses. The 511 SERIES receives an excellent rating because the thin wall of polyimide tape will survive better than almost any other insulation applied in the same wall thickness. The "absolute" abrasion resistance of a construction will depend not only on the type of insulation, but on thickness at which it is applied.

Moisture Resistance ratings are given for wire in the "as received" condition. In the case of fiberglass insulated wire, moisture resistance is achieved by using impregnations or spirally applied tapes called moisture barriers. The impregnations and/or tapes will burn off at temperatures below the upper useful operating temperatures of the fiberglass. The thermoplastic insulations (PVC and fluoroplastics) and polyimide insulated constructions will maintain their moisture resistance up to their "continuous" temperature rating.

Chemical Resistance ratings are applied as they relate to most common chemicals. These ratings apply to insulation types and not necessarily to the type of impregnation used. Contact the factory for specific applications.

Thermocouple and Extension Wire

Technical Data (Continued)

Metallic Overbraids and Wraps

Although standard SERV-RITE wire products are designed to yield a high degree of abrasion resistance, it is sometimes necessary to add an additional metallic covering to further enhance this property. Following are available overbraids and wraps.

Stainless Steel Wire Braid (S)

This most popular overbraid uses 300 series stainless steel and is available on virtually all standard SERV-RITE wire offerings. It is an economical method to extend the life of thermocouple and extension wire. Several of Watlow's standard wire items are available from stock with a stainless overbraid. Non-stock items are available as a special order.

Alloy 600 Wire Braid (N)

Most commonly specified on high temperature SERV-RITE wire yarn insulations, the Inconel® braid offers a higher operating temperature than the series 300 stainless steel overbraid. When this braid is specified on SERV-RITE SERIES 350, the performance of the material is only surpassed by metal-sheathed cables. Consult the factory for availability on specific wire items.

Tinned Copper Wire Overbraid (C)

When there is a possibility of electrical interference in the area of the thermocouple installation, it may be necessary to shield the wire from electrical "noise." Several Watlow standard products use aluminized tapes as an intrinsic shield. If shielding is needed on other constructions, a tinned copper shield can be specified as a special order.

Ordering Information

Example Part Number - Typical code number J20/1/304 becomes J20/1/S/304

① ANSI Letter Designation	② ③ B & S Gauge	④ Conductor Type/ Tolerance	⑤ Metallic Overbraid/ Wrap Type	⑥ ⑦ ⑧ Insulation Type
J	20	1	S	304

① ANSI Letter Designation (Calibration)	
J =	Type J

② ③ B & S Gauge	
20 =	20 gauge solid

④ Conductor Type/Tolerance	
1 =	Thermocouple grade, solid wire, standard tolerance
2 =	Thermocouple grade, solid wire, special tolerance
3 =	Thermocouple grade, stranded wire, standard tolerance
4 =	Thermocouple grade, stranded wire, special tolerance
5 =	Extension grade, solid wire, standard tolerance
6 =	Extension grade, solid wire, special tolerance
7 =	Extension grade, stranded wire, standard tolerance
8 =	Extension grade, stranded wire, special tolerance

⑤ Metallic Overbraid/Wrap Type	
S =	Stainless steel
N =	Alloy 600
C =	Tinned copper

⑥ ⑦ ⑧ Insulation Type	
304 =	Type 304 SS

Thermocouple and Extension Wire

Fiberglass Braided Thermocouple and Extension Wire SERIES 304



The uniform quality and availability of the SERIES 304 make it the ideal wire for general applications requiring moderate abrasion and moisture resistance, wide temperature capabilities and economy.

Each conductor is covered with a color coded glass braid. This braid is impregnated to enhance abrasion resistance and reduce fraying. The insulated single conductors are laid parallel and covered with another layer of woven glass. A final impregnation is then applied to the glass.

For higher temperatures, consider SERIES 321.

Performance Capabilities

- Continuous temperature rating: 900°F (482°C)
- Fiberglass braided yarn insulation
- Available with an optional metallic overbraid for additional abrasion resistance

Applications

- Heat treating
- Oven
- General use

Specifications

Continuous use temperature
- 900°F (482°C)

Single use temperature
- 1000°F (540°C)

Resin retained to 400°F (204°C)

Resistance properties
- Moisture: Good
- Chemical: Good
- Abrasion: Fair

Popular Constructions

Grade	AWG	Wire Type	Limits of Error	Type K	Type J	Type T	Type E
Thermocouple	20	Solid	Standard	**K20-1-304***	**J20-1-304***	**T20-1-304**	**E20-1-304**
		Solid	Special	**K20-2-304**	**J20-2-304**	T20-2-304	E20-2-304
		Stranded	Standard	**K20-3-304***	**J20-3-304***	T20-3-304	E20-3-304
	24	Solid	Standard	**K24-1-304**	**J24-1-304**	**T24-1-304**	
		Solid	Special	**K24-2-304**	**J24-2-304**	T24-2-304	
		Stranded	Standard	**K24-3-304**	**J24-3-304**		
Extension	20	Solid	Standard				

***** These constructions stocked with a **stainless steel overbraid** (order overbraid by adding "-S" in front of construction type (i.e. K20-1-S-304).
Note: Bolded products are stocked.

Wire Specifications

AWG	Nominal Conductor Size		Nominal Insulation Thickness				Nominal Overall Size		Approximate Shipping Weight	
			Conductor		Overall					
	in.	(mm)	in.	(mm)	in.	(mm)	in.	(mm)	lbs/1000 ft	(kg/km)
24	0.020	(1.508)	0.005	(0.127)	0.006	(0.152)	0.045 x 0.072	(1.14 x 1.83)	7	(10.4)
24 S* (7/32)	0.024	(1.610)	0.005	(0.127)	0.006	(0.152)	0.048 x 0.080	(1.22 x 2.03)	8	(11.9)
20	0.032	(1.813)	0.005	(0.127)	0.006	(0.152)	0.056 x 0.096	(1.42 x 2.44)	9	(13.4)
20 S* (7/28)	0.038	(1.965)	0.006	(0.152)	0.006	(0.152)	0.064 x 0.112	(1.63 x 2.84)	10	(14.9)

* "S" denotes stranded wire: e.g., "20 S (7/28)" is seven strands of 28 gauge wire to make a 20 gauge stranded conductor.

Thermocouple and Extension Wire

Fiberglass Braided Thermocouple and Extension Wire SERIES 304 (Continued)

Ordering Information

Part Number

① ASTM E 230 Calibration	② ③ AWG	④ Conductor Type/ Tolerance	⑤	⑥	⑦
			3	0	4

①	ASTM E 230 Calibration
E =	Type E
J =	Type J
K =	Type K
S =	Type S
T =	Type T

② ③	AWG
24 =	24 gauge solid or 24 gauge stranded (7/32)
20 =	20 gauge solid or 20 gauge stranded (7/28)

④	Conductor Type/Tolerance
1 =	Thermocouple grade, solid wire, standard tolerance
2 =	Thermocouple grade, solid wire, special tolerance
3 =	Thermocouple grade, stranded wire, standard tolerance
4 =	Thermocouple grade, stranded wire, special tolerance
5 =	Extension grade, solid wire, standard tolerance
6 =	Extension grade, solid wire, special tolerance
7 =	Extension grade, stranded wire, standard tolerance
8 =	Extension grade, stranded wire, special tolerance

Note: Minimum order sizes apply for non-stock constructions.

Thermocouple and Extension Wire

Fiberglass Wrapped Thermocouple and Extension Wire SERIES 305

SERIES 305 is specifically constructed for light duty applications where size is a critical factor. Single conductors are insulated using a specialized yarn wrapped around the conductors in layers. Yarn is then impregnated to add abrasion resistance and enhance electrical properties. The insulated single conductors are then laid parallel and covered with a layer of braided glass. A final impregnation is applied to the braid.

For higher temperature applications, use SERIES 321.

Performance Capabilities

- Continuous temperature rating: 900°F (482°C)
- Fiberglass braided yarn insulation
- Yarn wrapped conductors for superior coverage on small gauge wires
- Available with an optional metallic overbraid for additional abrasion resistance



Applications

- Heat treating
- Oven
- General use

Specifications

Continuous use temperature
- 900°F (482°C)

Single use temperature
- 1000°F (540°C)

Resin retained to 400°F (204°C)

Resistance properties
- Moisture: Good
- Chemical: Good
- Abrasion: Fair

Popular Constructions

Grade	AWG	Wire Type	Limits of Error	Type K	Type J
Thermocouple	24	Solid	Standard	K24-1-305	J24-1-305
		Solid	Special	K24-2-305	J24-2-305
	28	Solid	Standard	K28-1-305	J28-1-305
		Solid	Special	**K28-2-305**	**J28-2-305**
	30	Solid	Standard	**K30-1-305**	**J30-1-305**
		Solid	Special	**K30-2-305**	**J30-2-305**

Note: Bolded products are stocked.

Wire Specifications

AWG	Nominal Conductor Size		Nominal Insulation Thickness				Nominal Overall Size		Approximate Shipping Weight	
			Conductor		Overall					
	in.	(mm)	in.	(mm)	in.	(mm)	in.	(mm)	lbs/1000 ft	(kg/km)
30	0.010	(0.254)	0.005	(0.127)	0.008	(0.203)	0.036 x 0.056	(0.914 x 1.42)	3	(4.5)
28	0.013	(0.320)	0.005	(0.127)	0.008	(0.203)	0.040 x 0.062	(1.02 x 1.57)	3	(4.5)
24	0.020	(0.508)	0.005	(0.127)	0.006	(0.152)	0.042 x 0.072	(1.07 x 1.83)	7	(10.4)
24 S* (7/32)	0.024	(0.610)	0.005	(0.127)	0.006	(0.152)	0.048 x 0.080	(1.22 x 2.03)	8	(11.9)
20	0.032	(0.813)	0.005	(0.127)	0.006	(0.152)	0.054 x 0.096	(1.37 x 2.44)	9	(13.4)
20 S* (7/28)	0.038	(0.965)	0.005	(0.127)	0.006	(0.152)	0.060 x 0.108	(1.52 x 2.74)	10	(14.9)

* “S” denotes stranded wire: e.g., “24 S (7/32)” is seven strands of 32 gauge wire to make a 24 gauge stranded conductor.

Thermocouple and Extension Wire

Fiberglass Wrapped Thermocouple and Extension Wire SERIES 305 (Continued)

Ordering Information

Part Number

① ASTM E 230 Calibration	② ③ AWG	④ Conductor Type/ Tolerance	⑤	⑥	⑦
			3	0	5

①	ASTM E 230 Calibration
E =	Type E
J =	Type J
K =	Type K
S =	Type S
T =	Type T

② ③	AWG
30 =	30 gauge solid
28 =	28 gauge solid
24 =	24 gauge solid or 24 gauge stranded (7/32)
20 =	20 gauge solid or 20 gauge stranded (7/28)

④	Conductor Type/Tolerance
1 =	Thermocouple grade, solid wire, standard tolerance
2 =	Thermocouple grade, solid wire, special tolerance
3 =	Thermocouple grade, stranded wire, standard tolerance
4 =	Thermocouple grade, stranded wire, special tolerance
5 =	Extension grade, solid wire, standard tolerance
6 =	Extension grade, solid wire, special tolerance
7 =	Extension grade, stranded wire, standard tolerance
8 =	Extension grade, stranded wire, special tolerance

Note: Minimum order sizes apply for non-stock constructions.

Thermocouple and Extension Wire

High-Temperature Fiberglass Twisted Thermocouple Wire SERIES 314



The SERIES 314 is an economical construction for general, high temperature applications. The braided high temperature yarn is applied in a unique manner that allows SERIES 314 to be competitively priced with other fiberglass constructions. It produces a finished wire that performs at temperatures to 1600°F (870°C).

The conductors are insulated with braided, high strength fiberglass and impregnated to improve abrasion resistance. The impregnation is tinted to impart color coding to primary insulations. The insulated single conductors are then twisted together to yield a construction flexible enough for almost any application.

Performance Capabilities

- Continuous temperature rating: 1300°F (705°C)
- Fiberglass braided yarn insulation
- Twisted design has no jacket
- Available with an optional metallic overbraid for additional abrasion resistance

Applications

- Heat treating
- Aluminum stress relieving
- Steel annealing

Specifications

Continuous use temperature
- 1300°F (705°C)

Single use temperature
- 1600°F (870°C)

Resin retained to 400°F (204°C)

Resistance properties
- Moisture: Good
- Chemical: Good
- Abrasion: Good

Popular Constructions

Grade	AWG	Wire Type	Limits of Error	Type K	Type J
Thermocouple	20	Solid	Standard	K20-1-314	J20-1-314
		Solid	Special	**K20-2-314**	**J20-2-314**
	24	Solid	Standard	K24-1-314	J24-1-314
		Solid	Special	K24-2-314	J24-2-314

Note: **Bolded** products are stocked.

Wire Specifications

AWG	Nominal Conductor Size		Nominal Insulation Thickness		Nominal Overall Size		Approximate Shipping Weight	
	in.	(mm)	in.	(mm)	in.	(mm)	lbs/1000 ft	(kg/km)
24	0.020	(0.508)	0.015	(0.381)	0.100	(2.54)	6	(8.9)
20	0.032	(0.965)	0.015	(0.381)	0.124	(3.15)	10	(14.9)
18	0.040	(1.020)	0.018	(0.457)	0.152	(3.56)	16	(23.8)
16	0.051	(1.290)	0.018	(0.457)	0.174	(4.42)	21	(31.3)

Ordering Information

Part Number

① ASTM E 230 Calibration	②③ AWG	④ Conductor Type/ Tolerance	⑤	⑥	⑦
			3	1	4

①	ASTM E 230 Calibration
J =	Type J
K =	Type K

②③	AWG
24 =	24 gauge solid
20 =	20 gauge solid
16 =	16 gauge solid

④	Conductor Type/Tolerance
1 =	Thermocouple grade, solid wire, standard tolerance
2 =	Thermocouple grade, solid wire, special tolerance

Note: Minimum order sizes apply for non-stock constructions.

Thermocouple and Extension Wire

High-Temperature Braided Fiberglass Thermocouple Wire SERIES 321

The addition of color coding and impregnation to the high temperature fiberglass make this wire the next logical step for systems, which exceed temperature capabilities of the standard glass insulated series.

Each conductor is covered with a color coded, high temperature fiberglass braid. This braid is then impregnated to enhance abrasion resistance and reduce fraying. The insulated conductors are laid parallel and covered with another braid of high temperature fiberglass and impregnation.

Performance Capabilities

- Continuous temperature rating: 1300°F (705°C)
- Heavy fiberglass braided yarn insulation
- Twisted design has no jacket
- Available with an optional metallic overbraid for additional abrasion resistance



Applications

- Heat treating
- Aluminum and steel

Specifications

Continuous use temperature
- 1300°F (705°C)

Single use temperature
- 1600°F (870°C)

Resin retained to 400°F (204°C)

Resistance properties
- Moisture: Good
- Chemical: Good
- Abrasion: Good

Popular Constructions

Grade	AWG	Wire Type	Limits of Error	Type K	Type J
Thermocouple	20	Solid	Standard	**K20-1-321**	**J20-1-321**
		Solid	Special	**K20-2-321**	**J20-2-321**
	24	Solid	Standard	K24-1-321	J24-1-321
		Solid	Special	K24-2-321	J24-2-321

***** Calibrated from 200 to 2200°F (93 to 1204°C), every 200°F (93°C). Only available in this construction.
Bolded products are stocked.

Wire Specifications

AWG	Nominal Conductor Size		Nominal Insulation Thickness				Nominal Overall Size		Approximate Shipping Weight	
			Conductor		Overall					
	in.	(mm)	in.	(mm)	in.	(mm)	in.	(mm)	lbs/1000 ft	(kg/km)
24	0.020	(0.508)	0.015	(0.381)	0.010	(0.254)	0.072 x 0.120	(1.83 x 3.05)	10	(14.9)
20	0.032	(0.965)	0.015	(0.381)	0.010	(0.254)	0.082 x 0.140	(2.08 x 3.56)	13	(19.4)
18	0.040	(1.020)	0.015	(0.381)	0.010	(0.254)	0.090 x 0.156	(2.29 x 3.96)	18	(26.8)

Ordering Information

Part Number

① ASTM E 230 Calibration	②③ AWG	④ Conductor Type/ Tolerance	⑤	⑥	⑦
			3	2	1

①	ASTM E 230 Calibration
J =	Type J
K =	Type K

②③	AWG
24 =	24 gauge solid
20 =	20 gauge solid

④	Conductor Type/Tolerance
1 =	Thermocouple grade, solid wire, standard tolerance
2 =	Thermocouple grade, solid wire, special tolerance

Note: Minimum order sizes apply for non-stock constructions.

Thermocouple and Extension Wire

Polyvinyl Chloride (PVC) Insulated Extension Wire SERIES 502

SERIES 502 is an economical wire that has PVC for the primary and duplex insulation.

The primary and duplex insulation is PVC. It yields a construction that is inexpensive and performs continuously at temperatures up to 220°F (105°C).

SERIES 502 is often used in conduit and wiring trays here its flexibility allows for easy installation. It can be easily stripped using hand tools or mechanical methods.

Performance Capabilities

- Continuous temperature rating: 220°F (105°C)
- Flexible PVC plastic insulation
- Available with an optional metallic overbraid for additional abrasion resistance



Applications

- General use extension wire

Specifications

Continuous use temperature
- 220°F (105°C)

Single use temperature
- 220°F (105°C)

Resistance properties
- Moisture: Excellent
- Chemical: Excellent
- Abrasion: Excellent

Popular Constructions

Grade	AWG	Wire Type	Limits of Error	Type K	Type J	Type T	Type E	Type S
Extension	16	Solid	Standard	**K16-5-502**	**J16-5-502**			
		Stranded	Standard	K16-7-502	J16-7-502			
	20	Solid	Standard	**K20-5-502**	**J20-5-502**	**T20-5-502**	**E20-5-502**	**S20-5-502**
		Stranded	Standard	**K20-7-502**	**J20-7-502**	**T20-7-502**		
	24	Solid	Standard	K24-5-502	J24-5-502	T24-5-502		
		Stranded	Standard	K24-7-502	J24-7-502	T24-7-502		

Note: Bolded products are stocked.

Wire Specifications

AWG	Nominal Conductor Size		Nominal Insulation Thickness				Nominal Overall Size		Approximate Shipping Weight	
			Conductor		Overall					
	in.	(mm)	in.	(mm)	in.	(mm)	in.	(mm)	lbs/1000 ft	(kg/km)
24	0.020	(0.508)	0.015	(0.381)	0.015	(0.381)	0.080 x 0.130	(2.03 x 3.30)	10	(14.9)
24 S* (7/32)	0.024	(0.610)	0.015	(0.381)	0.015	(0.381)	0.084 x 0.138	(2.13 x 3.51)	11	(16.4)
20	0.032	(0.813)	0.015	(0.381)	0.015	(0.381)	0.092 x 0.154	(2.34 x 3.91)	14	(20.9)
20 S* (7/32)	0.038	(0.965)	0.015	(0.381)	0.015	(0.381)	0.098 x 0.166	(2.49 x 4.22)	16	(23.8)
16	0.051	(1.29)	0.020	(0.508)	0.020	(0.508)	0.131 x 0.222	(3.33 x 5.64)	28	(41.7)
16 S* (7/24)	0.060	(1.52)	0.020	(0.508)	0.020	(0.508)	0.140 x 0.240	(3.56 x 6.10)	30	(44.7)

* “S” denotes stranded wire: e.g., “24 S (7/32)” is seven strands of 32 gauge wire to make a 24 gauge stranded conductor.

Thermocouple and Extension Wire

PVC Insulated Extension Wire SERIES 502 (Continued)

Ordering Information

Part Number

① ASTM E 230 Calibration	② ③ AWG	④ Conductor Type/ Tolerance	⑤	⑥	⑦
			5	0	2

①	ASTM E 230 Calibration
E =	Type E
J =	Type J
K =	Type K
S =	Type S
T =	Type T

② ③	AWG
24 =	24 gauge solid or 24 gauge stranded (7/28)
20 =	20 gauge solid or 20 gauge stranded (7/28)
16 =	16 gauge solid or 16 gauge stranded (7/24)

④	Conductor Type/Tolerance
5 =	Extension grade, solid wire, standard tolerance
6 =	Extension grade, solid wire, special tolerance
7 =	Extension grade, stranded wire, standard tolerance
8 =	Extension grade, stranded wire, special tolerance

Note: Minimum order sizes apply for non-stock constructions.

Thermocouple and Extension Wire

PVC Insulated "RIPCORD" SERIES 505

The SERIES 505 is the most economical wire produced. Unlike some competitive "ripcord" type constructions, which use only a stripe to establish polarity, SERIES 505 single conductors are fully color coded. The conductors are individually insulated with the proper colored PVC and fused into "ripcord" using a proprietary process.

Insulated conductors can be easily separated by hand once the bond between conductors has been slit. As with other PVC insulated products, SERIES 505 lends itself well to both manual and mechanical stripping methods.



Performance Capabilities

- Continuous temperature rating: 220°F (105°C)
- Flexible PVC plastic insulation
- "Ripcord" peelable construction
- Available with an optional metallic overbraid for additional abrasion resistance

Applications

- Laboratory
- Test stand
- Automotive

Specifications

Continuous use temperature

- 220°F (105°C)

Single use temperature

- 220°F (105°C)

Resistance properties

- Moisture: Excellent
- Chemical: Good
- Abrasion: Good

Popular Constructions

Grade	AWG	Wire Type	Limits of Error	Type K	Type J	Type T
Thermocouple	24	Solid	Standard	**K24-1-505**	**J24-1-505**	**T24-1-505**
		Solid	Special	**K24-2-505**	**J24-2-505**	**T24-2-505**

Note: **Bolded** products are stocked.

Wire Specifications

AWG	Nominal Conductor Size		Nominal Conductor Insulation Thickness		Nominal Overall Size		Approximate Shipping Weight	
	in.	(mm)	in.	(mm)	in.	(mm)	lbs/1000 ft	(kg/km)
26	0.016	(0.406)	0.015	(0.381)	0.046 x 0.088	(1.17 x 2.24)	4	(6.0)
24	0.020	(0.508)	0.015	(0.381)	0.050 x 0.096	(1.27 x 2.44)	5	(7.5)

Ordering Information

Part Number

① ASTM E 230 Calibration	②③ AWG	④ Conductor Type/ Tolerance	⑤	⑥	⑦
			5	0	5

①	ASTM E 230 Calibration
J =	Type J
K =	Type K
T =	Type T

②③	AWG
26 =	26 gauge solid
24 =	24 gauge solid or 24 gauge stranded (7/32)
20 =	20 gauge solid or 20 gauge stranded (7/28)

④	Conductor Type/Tolerance
1 =	Thermocouple grade, solid wire, standard tolerance
2 =	Thermocouple grade, solid wire, special tolerance
3 =	Thermocouple grade, stranded wire, standard tolerance
4 =	Thermocouple grade, stranded wire, special tolerance

Note: Minimum order sizes apply for non-stock constructions.

Thermocouple and Extension Wire

Small Gauge Fluorinated Ethylene Propylene (FEP) Insulated SERIES 506

The SERIES 506 is the smallest standard insulated wire construction. The thin FEP wall on both primary and duplex insulation yields a construction that can operate safely at temperatures far beyond common PVC and nylon insulations.

The SERIES 506 is fully color coded for easy installation. Its small size allows use in high density circuits. Response time is minimized by small diameter conductors. For larger diameter gauge sizes than #28, specify SERIES 507.



Performance Capabilities

- Continuous temperature rating: 400°F (204°C)
- Flexible FEP plastic insulation
- Thin insulation wall for a compact construction
- Available with an optional metallic overbraid for additional abrasion resistance

Applications

- Laboratory
- Test stand
- Industrial equipment testing

Specifications

Continuous use temperature
- 400°F (204°C)

Single use temperature
- 500°F (260°C)

Resistance properties
- Moisture: Excellent
- Chemical: Excellent
- Abrasion: Excellent

Popular Constructions

Grade	AWG	Wire Type	Limits of Error	Type K	Type J	Type T
Thermocouple	28	Solid	Special	K28-2-506	J28-2-506	T28-2-506
	30	Solid	Special	**K30-2-506**	**J30-2-506**	**T30-2-506**
	36	Solid	Special	K36-2-506	J36-2-506	T36-2-506

Note: Bolded products are stocked.

Wire Specifications

AWG	Nominal Conductor Size		Nominal Insulation Thickness				Nominal Overall Size		Approximate Shipping Weight	
			Conductor		Overall					
	in.	(mm)	in.	(mm)	in.	(mm)	in.	(mm)	lbs/1000 ft	(kg/km)
36	0.005	(0.127)	0.005	(0.127)	0.005	(0.127)	0.025 x 0.040	(0.635 x 1.02)	2	(3.0)
32	0.008	(0.203)	0.005	(0.127)	0.005	(0.127)	0.028 x 0.046	(0.711 x 1.17)	2	(3.0)
30	0.010	(0.254)	0.005	(0.127)	0.005	(0.127)	0.030 x 0.050	(0.762 x 1.27)	3	(4.5)
28	0.013	(0.330)	0.005	(0.127)	0.005	(0.127)	0.033 x 0.056	(0.838 x 1.42)	3	(4.5)

Ordering Information

Part Number

① ASTM E 230 Calibration	②③ AWG	④ Conductor Type/ Tolerance	⑤	⑥	⑦
			5	0	6

①	ASTM E 230 Calibration
E =	Type E
J =	Type J
K =	Type K
S =	Type S
T =	Type T

②③	AWG
36 =	36 gauge solid
30 =	30 gauge solid
28 =	28 gauge solid

④	Conductor Type/Tolerance
1 =	Thermocouple grade, solid wire, standard tolerance
2 =	Thermocouple grade, solid wire, special tolerance

Note: Minimum order sizes apply for non-stock constructions.

Thermocouple and Extension Wire

FEP Insulated Thermocouple and Extension Wire SERIES 507



The SERIES 507 is the most economical fluoroplastic insulated wire. Individual conductors are coated with a layer of color coded FEP. The insulated conductors are then parallel duplexed with an additional layer of color coded FEP. The finished construction has a continuous temperature rating of 400°F (204°C). Abrasion, moisture and chemical resistance exceed most other insulations.

This construction is widely used when pulling long lengths of wire through conduit. FEP's low friction coefficient and abrasion resistance are suited for these applications.

For higher abrasion resistance consider SERIES 514 Tefzel® insulated constructions.

For higher temperatures specify SERIES 508.

Applications

- General use extension wire

Specifications

Continuous use temperature
- 400°F (204°C)

Single use temperature
- 500°F (260°C)

Resistance properties
- Moisture: Excellent
- Chemical: Excellent
- Abrasion: Excellent

Performance Capabilities

- Continuous temperature rating: 400°F (204°C)
- Flexible FEP plastic insulation
- Available with an optional metallic overbraid for additional abrasion resistance

Popular Constructions

Grade	AWG	Wire Type	Limits of Error	Type K	Type J	Type T	Type E	Type S
Extension	20	Solid	Standard	**K20-5-507**	**J20-5-507**	T20-5-507	E20-5-507	**S20-5-507**
	24	Solid	Standard					S24-5-507
Thermocouple	20	Solid	Standard	**K20-1-507**	**J20-1-507**	**T20-1-507**	**E20-1-507**	
		Stranded	Standard	**K20-3-507**	**J20-3-507**	**T20-3-507**	E20-3-507	
		Solid	Special	**K20-2-507**	**J20-2-507**	**T20-2-507**	E20-2-507	
	24	Solid	Standard	**K24-1-507**	**J24-1-507**	T24-1-507	E24-1-507	
		Stranded	Standard	**K24-3-507**	**J24-3-507**	T24-3-507	E24-3-507	
		Solid	Special	**K24-2-507**	**J24-2-507**	**T24-2-507**	E24-2-507	

Note: Bolded products are stocked.

Wire Specifications

AWG	Nominal Conductor Size		Nominal Insulation Thickness				Nominal Overall Size		Approximate Shipping Weight	
			Conductor		Overall					
	in.	(mm)	in.	(mm)	in.	(mm)	in.	(mm)	lbs/1000 ft	(kg/km)
24	0.020	(0.508)	0.008	(0.203)	0.010	(0.254)	0.056 x 0.096	(1.42 x 2.44)	8	(11.9)
24 S* (7/32)	0.024	(0.610)	0.008	(0.203)	0.010	(0.254)	0.060 x 0.104	(1.52 x 2.64)	9	(13.4)
22	0.025	(0.635)	0.008	(0.203)	0.010	(0.254)	0.061 x 0.106	(1.55 x 2.69)	10	(14.9)
22 S* (7/30)	0.030	(0.762)	0.008	(0.203)	0.010	(0.254)	0.066 x 0.116	(1.68 x 2.95)	11	(16.4)
20	0.032	(0.813)	0.008	(0.203)	0.010	(0.254)	0.068 x 0.120	(1.73 x 3.05)	12	(17.9)
20 S* (7/28)	0.038	(0.965)	0.008	(0.203)	0.010	(0.254)	0.074 x 0.132	(1.88 x 3.35)	14	(20.9)
18	0.040	(1.02)	0.008	(0.203)	0.010	(0.254)	0.076 x 0.136	(1.93 x 3.45)	18	(26.8)
18 S* (7/26)	0.048	(1.22)	0.008	(0.203)	0.010	(0.254)	0.084 x 0.152	(2.13 x 3.86)	20	(29.8)

* "S" denotes stranded wire: e.g., "24 S (7/32)" is seven strands of 32 gauge wire to make a 24 gauge stranded conductor.

Thermocouple and Extension Wire

FEP Insulated Thermocouple and Extension Wire SERIES 507 (Continued)

Ordering Information

Part Number

① ASTM E 230 Calibration	② ③ AWG	④ Conductor Type/ Tolerance	⑤	⑥	⑦
			5	0	7

①	ASTM E 230 Calibration
E =	Type E
J =	Type J
K =	Type K
S =	Type S
T =	Type T

② ③	AWG
24 =	24 gauge solid or 24 gauge stranded (7/32)
22 =	22 gauge solid or 22 gauge stranded (7/30)
20 =	20 gauge solid or 20 gauge stranded (7/28)

④	Conductor Type/Tolerance
1 =	Thermocouple grade, solid wire, standard tolerance
2 =	Thermocouple grade, solid wire, special tolerance
3 =	Thermocouple grade, stranded wire, standard tolerance
4 =	Thermocouple grade, stranded wire, special tolerance
5 =	Extension grade, solid wire, standard tolerance
6 =	Extension grade, solid wire, special tolerance
7 =	Extension grade, stranded wire, standard tolerance
8 =	Extension grade, stranded wire, special tolerance

Note: Minimum order sizes apply for non-stock constructions.

Thermocouple and Extension Wire

TFE Insulated SERIES 508



The primary and duplex insulation of SERIES 508 is fused TFE tape, which is spirally applied to the conductor and heated. This process, called sintering, forms the tape into a homogeneous layer. When sintered, the tape exhibits all of the advantages of extruded TFE insulation, while eliminating the concentricity problems associated with TFE extrusions.

The SERIES 508 is fully color coded and capable of continuous operation in excess of 500°F (260°C). Because the fusing process causes the duplex tape to fuse with the primary insulation, SERIES 508 is not recommended for applications where it is necessary to remove the outer tape while leaving the primary insulation intact.

Performance Capabilities

- Continuous temperature rating: 500°F (260°C)
- Fused TFE tape insulation
- Available with an optional metallic overbraid for additional abrasion resistance

Applications

- Aircraft
- Petroleum processing

Specifications

Continuous use temperature
- 500°F (260°C)

Single use temperature
- 600°F (315°C)

Resistance properties
- Moisture: Excellent
- Chemical: Excellent
- Abrasion: Good

Popular Constructions

Grade	AWG	Wire Type	Limits of Error	Type K	Type J	Type T	Type E
Thermocouple	20	Solid	Standard	**K20-1-508**	**J20-1-508**	T20-1-508	E20-1-508
		Stranded	Standard	K20-3-508	J20-3-508	T20-3-508	E20-3-508
		Solid	Special	**K20-2-508**	**J20-2-508**	**T20-2-508**	E20-2-508
	24	Solid	Standard	**K24-1-508**	**J24-1-508**	**T24-1-508**	E24-1-508
		Stranded	Standard	K24-3-508	J24-3-508	T24-3-508	E24-3-508
		Solid	Special	**K24-2-508**	**J24-2-508**	**T24-2-508**	E24-2-508

Note: Bolded products are stocked.

Wire Specifications

AWG	Nominal Conductor Size		Nominal Insulation Thickness				Nominal Overall Size		Approximate Shipping Weight	
			Conductor		Overall					
	in.	(mm)	in.	(mm)	in.	(mm)	in.	(mm)	lbs/1000 ft	(kg/km)
26	0.016	(0.406)	0.006	(0.152)	0.008	(0.203)	0.044 x 0.072	(1.12 x 1.83)	4	(6.0)
24	0.020	(0.508)	0.006	(0.152)	0.008	(0.203)	0.047 x 0.077	(1.19 x 1.95)	5	(7.5)
24 S* (7/32)	0.024	(0.610)	0.006	(0.152)	0.008	(0.203)	0.049 x 0.084	(1.24 x 2.13)	6	(8.9)
20	0.032	(0.813)	0.006	(0.152)	0.008	(0.203)	0.061 x 0.106	(1.55 x 2.69)	11	(16.4)
20 S* (7/28)	0.038	(0.965)	0.006	(0.152)	0.008	(0.203)	0.064 x 0.112	(1.63 x 2.84)	12	(17.9)
18	0.040	(1.02)	0.006	(0.152)	0.008	(0.203)	0.068 x 0.120	(1.73 x 3.05)	16	(23.8)
18 S* (7/26)	0.048	(1.22)	0.006	(0.152)	0.008	(0.203)	0.076 x 0.136	(1.93 x 3.45)	18	(26.8)

* “S” denotes stranded wire: e.g., “24 S (7/32)” is seven strands of 32 gauge wire to make a 24 gauge stranded conductor.

Thermocouple and Extension Wire

TFE Insulated SERIES 508 (Continued)

Ordering Information

Part Number

① ASTM E 230 Calibration	② ③ AWG	④ Conductor Type/ Tolerance	⑤	⑥	⑦
			5	0	8

①	ASTM E 230 Calibration
E =	Type E
J =	Type J
K =	Type K
S =	Type S
T =	Type T

② ③	AWG
26 =	26 gauge solid
24 =	24 gauge solid or 24 gauge stranded (7/32)
20 =	20 gauge solid or 20 gauge stranded (7/28)

④	Conductor Type/Tolerance
1 =	Thermocouple grade, solid wire, standard tolerance
2 =	Thermocouple grade, solid wire, special tolerance
3 =	Thermocouple grade, stranded wire, standard tolerance
4 =	Thermocouple grade, stranded wire, special tolerance

Note: Minimum order sizes apply for non-stock constructions.

Thermocouple and Extension Wire

FEP Insulated and Shielded Thermocouple and Extension Wire SERIES 509

The SERIES 509 was developed specially for use with microprocessor-based systems.

The conductors are insulated with color coded FEP. They are then twisted with a copper drain wire. An aluminized polyester tape is wrapped around the conductors and drain wire and then FEP is applied.

The finished construction can withstand temperatures in excess of 400°F (204°C). Twisted conductors minimize electromagnetic interference (EMI) and the shield tape eliminates most problems associated with AC "noise" in the sensing circuit.

Performance Capabilities

- Continuous temperature rating: 400°F (204°C)
- Flexible FEP plastic insulation
- Twisted and shielded construction to reduce electrical noise interference
- Available with an optional metallic overbraid for additional abrasion resistance



Applications

- General use extension wire

Specifications

Continuous use temperature
- 400°F (204°C)

Single use temperature
- 500°F (260°C)

Resistance properties
- Moisture: Excellent
- Chemical: Excellent
- Abrasion: Excellent

Popular Constructions

Grade	AWG	Wire Type	Limits of Error	Type K	Type J	Type T	Type E	Type S
Extension	16	Solid	Standard	**K16-5-509**	**J16-5-509**			
		Stranded	Standard	K16-7-509	J16-7-509			
	20	Solid	Standard	**K20-5-509**	**J20-5-509**	T20-5-509	E20-5-509	S20-5-509
		Stranded	Standard	K20-7-509	J20-7-509	T20-7-509		
Thermocouple	20	Solid	Standard	**K20-1-509**	**J20-1-509**	**T20-1-509**		
		Solid	Special	**K20-2-509**	J20-2-509	T20-2-509		
	24	Solid	Standard	K24-1-509	J24-1-509	T24-1-509		
		Stranded	Standard	K24-3-509	J24-3-509	T24-3-509		

Note: **Bolded** products are stocked.

Wire Specifications

AWG	Nominal Conductor Size		Nominal Insulation Thickness				Nominal Overall Size		Approximate Shipping Weight	
			Conductor		Overall					
	in.	(mm)	in.	(mm)	in.	(mm)	in.	(mm)	lbs/1000 ft	(kg/km)
24	0.020	(0.508)	0.008	(0.203)	0.012	(0.305)	0.104	(2.64)	12	(17.9)
24 S* (7/32)	0.024	(0.610)	0.008	(0.203)	0.012	(0.305)	0.112	(2.84)	13	(19.4)
20	0.032	(0.813)	0.008	(0.203)	0.012	(0.305)	0.128	(3.25)	18	(26.8)
20 S* (7/28)	0.038	(0.965)	0.008	(0.203)	0.012	(0.305)	0.140	(3.56)	20	(29.8)
18	0.040	(1.02)	0.008	(0.203)	0.015	(0.381)	0.152	(3.86)	25	(37.3)
18 S* (7/26)	0.048	(1.22)	0.008	(0.203)	0.015	(0.381)	0.168	(4.27)	27	(40.2)
16	0.051	(1.29)	0.008	(0.203)	0.015	(0.381)	0.174	(4.42)	33	(49.2)
16 S* (7/24)	0.060	(1.52)	0.008	(0.203)	0.015	(0.381)	0.192	(4.88)	35	(52.2)

* "S" denotes stranded wire: e.g., "24 S (7/32)" is seven strands of 32 gauge wire to make a 24 gauge stranded conductor.

Thermocouple and Extension Wire

FEP Insulated and Shielded Thermocouple and Extension Wire SERIES 509 (Continued)

Ordering Information

Part Number

① ASTM E 230 Calibration	② ③ AWG	④ Conductor Type/ Tolerance	⑤	⑥	⑦
			5	0	9

①	ASTM E 230 Calibration
E =	Type E
J =	Type J
K =	Type K
S =	Type S
T =	Type T

② ③	AWG
24 =	24 gauge solid or 24 gauge stranded (7/32)
20 =	20 gauge solid or 20 gauge stranded (7/28)
16 =	16 gauge solid or 16 gauge stranded (7/24)

④	Conductor Type/Tolerance
1 =	Thermocouple grade, solid wire, standard tolerance
2 =	Thermocouple grade, solid wire, special tolerance
3 =	Thermocouple grade, stranded wire, standard tolerance
4 =	Thermocouple grade, stranded wire, special tolerance
5 =	Extension grade, solid wire, standard tolerance
6 =	Extension grade, solid wire, special tolerance
7 =	Extension grade, stranded wire, standard tolerance
8 =	Extension grade, stranded wire, special tolerance

Note: Minimum order sizes apply for non-stock constructions.

Thermocouple and Extension Wire

PVC Insulated and Shielded Thermocouple and Extension Wire SERIES 510

The SERIES 510 is a PVC insulated, twisted and shielded construction for systems sensitive to induced voltages and "noise."

The conductors are insulated with color coded PVC and then twisted with a copper drain wire. An aluminized polyester tape is wrapped around the two conductors and drain wires to impart 100 percent shielding. Then, another layer of PVC is applied.

The twisting eliminates most EMI while the shield tape minimizes AC "noise" in the sensing circuit.

Performance Capabilities

- Continuous temperature rating: 220°F (105°C)
- Flexible PVC plastic insulation
- Twisted and shielded construction to reduce electrical noise interference
- Available with an optional metallic overbraid for additional abrasion resistance



Applications

- General use extension wire

Specifications

Continuous use temperature
- 220°F (105°C)

Single use temperature
- 220°F (105°C)

Resistance properties
- Moisture: Excellent
- Chemical: Good
- Abrasion: Good

Popular Constructions

Grade	AWG	Wire Type	Limits of Error	Type K	Type J	Type T	Type E	Type S
Extension	16	Solid	Standard	**K16-5-510**	**J16-5-510**	**T16-5-510**		
		Stranded	Standard	K16-7-510	J16-7-510	T16-7-510		
	20	Solid	Standard	**K20-5-510**	**J20-5-510**	**T20-5-510**	**E20-5-510**	**S20-5-510**
		Stranded	Standard	**K20-7-510**	**J20-7-510**	T20-7-510		
	24	Solid	Standard	K24-5-510	J24-5-510	T24-5-510		
		Stranded	Standard	K24-7-510	J24-7-510	T24-7-510		

Note: Bolded products are stocked.

Wire Specifications

AWG	Nominal Conductor Size		Nominal Insulation Thickness				Nominal Overall Size		Approximate Shipping Weight	
			Conductor		Overall					
	in.	(mm)	in.	(mm)	in.	(mm)	in.	(mm)	lbs/1000 ft	(kg/km)
24	0.020	(0.508)	0.015	(0.381)	0.020	(0.508)	0.140	(3.56)	13	(19.4)
24 S* (7/32)	0.024	(0.610)	0.015	(0.381)	0.020	(0.508)	0.148	(3.76)	14	(20.9)
20	0.032	(0.813)	0.015	(0.381)	0.020	(0.508)	0.164	(4.17)	22	(32.8)
20 S* (7/28)	0.038	(0.965)	0.015	(0.381)	0.020	(0.508)	0.176	(4.47)	24	(35.8)
18	0.040	(1.02)	0.020	(0.508)	0.020	(0.508)	0.200	(5.08)	30	(44.7)
18 S* (7/26)	0.048	(1.22)	0.020	(0.508)	0.020	(0.508)	0.216	(5.49)	32	(47.7)
16	0.051	(1.29)	0.020	(0.508)	0.020	(0.508)	0.222	(5.64)	39	(58.1)
16 S* (7/24)	0.060	(1.52)	0.020	(0.508)	0.020	(0.508)	0.240	(6.10)	41	(61.1)

* "S" denotes stranded wire: e.g., "24 S (7/32)" is seven strands of 32 gauge wire to make a 24 gauge stranded conductor.

Thermocouple and Extension Wire

PVC Insulated and Shielded Thermocouple and Extension Wire SERIES 510 (Continued)

Ordering Information

Part Number

① ASTM E 230 Calibration	② ③ AWG	④ Conductor Type/ Tolerance	⑤	⑥	⑦
			5	1	0

①	ASTM E 230 Calibration
E =	Type E
J =	Type J
K =	Type K
S =	Type S
T =	Type T

② ③	AWG
24 =	24 gauge solid or 24 gauge stranded (7/32)
20 =	20 gauge solid or 20 gauge stranded (7/28)
16 =	16 gauge solid or 16 gauge stranded (7/24)

④	Conductor Type/Tolerance
1 =	Thermocouple grade, solid wire, standard tolerance
2 =	Thermocouple grade, solid wire, special tolerance
3 =	Thermocouple grade, stranded wire, standard tolerance
4 =	Thermocouple grade, stranded wire, special tolerance
5 =	Extension grade, solid wire, standard tolerance
6 =	Extension grade, solid wire, special tolerance
7 =	Extension grade, stranded wire, standard tolerance
8 =	Extension grade, stranded wire, special tolerance

Note: Minimum order sizes apply for non-stock constructions.

Thermocouple and Extension Wire

Polyimide Insulated and Twisted SERIES 511

SERIES 511 is the most economical polyimide taped construction. Polyimide film applied to the conductors is considered to be the ultimate “soft” insulation. The tape maintains its strength at temperatures up to 600°F (315°C). The FEP laminate serves as a moisture barrier and allows the tape to fuse with itself. The finished construction will not unravel when cut.

SERIES 511 conductors are wrapped with the polyimide tape, which is fused to itself. Each conductor is color coded with a colored thread under the tape. The insulated conductors are twisted into a duplex construction to eliminate the overall duplex insulation and minimize cost.



Performance Capabilities

- Continuous temperature rating: 600°F (315°C)
- Polyimide fused tape insulation
- Twisted design has no outer jacket
- Colored tracer used to indicate calibration type
- Available with an optional metallic overbraid for additional abrasion resistance

Applications

- Aerospace
- Petrochemical
- Plastics

Specifications

Continuous use temperature

- 600°F (315°C)

Single use temperature

- 800°F (430°C)

Resistance properties

- Moisture: Excellent
- Chemical: Excellent
- Abrasion: Excellent

Popular Constructions

Grade	AWG	Wire Type	Limits of Error	Type K	Type J
Thermocouple	20	Solid	Standard	K20-1-511	J20-1-511
		Solid	Special	K20-2-511	J20-2-511
	24	Solid	Standard	K24-1-511	J24-1-511
		Solid	Special	K24-2-511	**J24-2-511**

Note: **Bolded** products are stocked.

Wire Specifications

AWG	Nominal Conductor Size		Nominal Conductor Insulation Thickness		Nominal Overall Size		Approximate Shipping Weight	
	in.	(mm)	in.	(mm)	in.	(mm)	lbs/1000 ft	(kg/km)
30	0.010	(0.254)	0.004	(0.102)	0.040	(1.02)	3	(4.5)
24	0.020	(0.508)	0.005	(0.127)	0.060	(1.52)	4	(6.0)
24 S* (7/32)	0.024	(0.610)	0.005	(0.127)	0.068	(1.73)	5	(7.5)
20	0.032	(0.813)	0.005	(0.127)	0.084	(2.13)	8	(11.9)
20 S* (7/28)	0.038	(0.965)	0.005	(0.127)	0.094	(2.39)	9	(13.4)

Note: FEP laminate melts at approximately 260°C (500°F).

* “S” denotes stranded wire: e.g., “24 S (7/32)” is seven strands of 32 gauge wire to make a 24 gauge stranded conductor.

Thermocouple and Extension Wire

Polyimide Insulated and Twisted SERIES 511

(Continued)

Ordering Information

Part Number

① ASTM E 230 Calibration	② ③ AWG	④ Conductor Type/ Tolerance	⑤	⑥	⑦
			5	1	1

①	ASTM E 230 Calibration
J =	Type J
K =	Type K
T =	Type T

② ③	AWG
30 =	30 gauge solid
24 =	24 gauge solid or 24 gauge stranded (7/32)
20 =	20 gauge solid or 20 gauge stranded (7/28)
16 =	16 gauge solid

④	Conductor Type/Tolerance
1 =	Thermocouple grade, solid wire, standard tolerance
2 =	Thermocouple grade, solid wire, special tolerance
3 =	Thermocouple grade, stranded wire, standard tolerance
4 =	Thermocouple grade, stranded wire, special tolerance

Note: Minimum order sizes apply for non-stock constructions.

Thermocouple and Extension Wire

Polyimide Insulated SERIES 512



The SERIES 512 is a heavier duty version of SERIES 511 construction, using the same polyimide insulation. Color coding is accomplished using the same colored thread "tracers." The SERIES 512 has a duplex insulation of polyimide tape. The extra wall of tape yields a construction with increased abrasion resistance.

For higher temperature requirements, choose one of our fiberglass insulated wires.

For improved abrasion resistance, and easier color identification of conductors, specify SERIES 513 when contacting the factory.

Performance Capabilities

- Continuous temperature rating: 600°F (315°C)
- Polyimide fused tape insulation
- Colored tracer used to indicate calibration type
- Available with an optional metallic overbraid for additional abrasion resistance

Applications

- Aerospace
- Petrochemical
- Plastics

Specifications

Continuous use temperature
- 600°F (315°C)

Single use temperature
- 800°F (430°C)

Resistance properties
- Moisture: Excellent
- Chemical: Excellent
- Abrasion: Excellent

Popular Constructions

Grade	AWG	Wire Type	Limits of Error	Type K	Type J
Thermocouple	20	Solid	Standard	K20-1-512	**J20-1-512**
		Solid	Special	K20-2-512	J20-2-512
		Stranded	Standard	**K20-3-512**	**J20-3-512**
	24	Solid	Standard	K24-1-512	J24-1-512
		Solid	Special	K24-2-512	J24-2-512

Note: **Bolded** products are stocked.

Wire Specifications

AWG	Nominal Conductor Size		Nominal Insulation Thickness				Nominal Overall Size		Approximate Shipping Weight	
			Conductor		Overall					
	in.	(mm)	in.	(mm)	in.	(mm)	in.	(mm)	lbs/1000 ft	(kg/km)
30	0.010	(0.254)	0.004	(0.102)	0.005	(0.127)	0.026 x 0.044	(0.660 x 1.18)	3	(4.5)
24	0.020	(0.508)	0.005	(0.127)	0.005	(0.127)	0.036 x 0.064	(0.914 x 1.626)	5	(7.5)
24 S* (7/32)	0.024	(0.610)	0.005	(0.127)	0.005	(0.127)	0.043 x 0.066	(1.092 x 1.676)	6	(8.9)
20	0.032	(0.813)	0.005	(0.127)	0.005	(0.127)	0.048 x 0.088	(1.219 x 2.235)	8	(11.9)
20 S* (7/28)	0.038	(0.965)	0.005	(0.127)	0.005	(0.127)	0.056 x 0.098	(1.42 x 2.490)	9	(13.4)

Note: FEP laminate melts at approximately 260°C (500°F).

* "S" denotes stranded wire: e.g., "24 S (7/32)" is seven strands of 32 gauge wire to make a 24 gauge stranded conductor.

Thermocouple and Extension Wire

Polyimide Insulated SERIES 512 (Continued)

Ordering Information

Part Number

① ASTM E 230 Calibration	② ③ AWG	④ Conductor Type/ Tolerance	⑤	⑥	⑦
			5	1	2

①	ASTM E 230 Calibration
E =	Type E
J =	Type J
K =	Type K
T =	Type T

② ③	AWG
30 =	30 gauge solid
24 =	24 gauge solid or 24 gauge stranded (7/32)
20 =	20 gauge solid or 20 gauge stranded (7/28)

④	Conductor Type/Tolerance
1 =	Thermocouple grade, solid wire, standard tolerance
2 =	Thermocouple grade, solid wire, special tolerance
3 =	Thermocouple grade, stranded wire, standard tolerance
4 =	Thermocouple grade, stranded wire, special tolerance

Note: Minimum order sizes apply for non-stock constructions.

Thermocouple and Extension Wire

PFA Insulated Thermocouple and Extension Wire SERIES 516

A relatively new fluoroplastic, perfluoralkoxy (PFA), is the insulation used for SERIES 516. PFA's temperature rating is only slightly less than TFE. However, PFA can be applied using conventional extrusion techniques.
This produces a smooth finish, as opposed to the spiral usually associated with TFE tape constructions. This is important in the foodservice equipment industry where taped constructions present cleaning problems. The smooth surface also allows this construction to be pulled through conduits and cut-outs more easily.

Once each conductor has been coated with a color coded PFA layer, they are laid parallel and coated again with PFA.

Performance Capabilities

- Continuous temperature rating: 500°F (260°C)
- Flexible PFA plastic insulation
- Available with an optional metallic overbraid for additional abrasion resistance



Applications

- General use extension wire

Specifications

Continuous use temperature
- 500°F (260°C)

Single use temperature
- 550°F (290°C)

Resistance properties
- Moisture: Excellent
- Chemical: Excellent
- Abrasion: Good

Popular Constructions

Grade	AWG	Wire Type	Limits of Error	Type K	Type J	Type T	Type E
Thermocouple	20	Solid	Standard	K20-1-516	J20-1-516	T20-1-516	E20-1-516
		Solid	Special	K20-2-516	J20-2-516	T20-2-516	E20-2-516
		Stranded	Standard	K20-3-516	J20-3-516	T20-3-516	E20-3-516
	24	Solid	Standard	K24-1-516	J24-1-516	T20-1-516	E24-1-516
		Solid	Special	**K24-2-516**	J24-2-516	T20-2-516	E24-2-516
		Stranded	Standard	K24-3-516	**J24-3-516**	T20-3-516	E24-3-516

Note: Bolded products are stocked.

Wire Specifications

AWG	Nominal Conductor Size		Nominal Insulation Thickness				Nominal Overall Size		Approximate Shipping Weight	
			Conductor		Overall					
	in.	(mm)	in.	(mm)	in.	(mm)	in.	(mm)	lbs/1000 ft	(kg/km)
36	0.005	(0.127)	0.003	(0.076)	0.003	(0.076)	0.017 x 0.028	(0.432 x 0.711)	3.0	(2)
30	0.010	(0.254)	0.003	(0.076)	0.003	(0.076)	0.022 x 0.038	(0.559 x 0.965)	4.5	(3)
24	0.020	(0.508)	0.008	(0.203)	0.010	(0.254)	0.056 x 0.092	(1.42 x 2.34)	11.9	(8)
24 S* (7/32)	0.024	(0.610)	0.008	(0.203)	0.010	(0.254)	0.060 x 0.100	(1.52 x 2.54)	13.4	(9)
20	0.032	(0.813)	0.008	(0.203)	0.010	(0.254)	0.068 x 0.116	(1.73 x 2.95)	17.9	(12)
20 S* (7/28)	0.038	(0.965)	0.008	(0.203)	0.010	(0.254)	0.074 x 0.128	(1.88 x 3.25)	20.9	(14)

* "S" denotes stranded wire: e.g., "24 S (7/32)" is seven strands of 32 gauge wire to make a 24 gauge stranded conductor.

Thermocouple and Extension Wire

PFA Insulated Thermocouple and Extension Wire SERIES 516 (Continued)

Ordering Information

Part Number

① ASTM E 230 Calibration	② ③ AWG	④ Conductor Type/ Tolerance	⑤	⑥	⑦
			5	1	6

①	ASTM E 230 Calibration
E =	Type E
J =	Type J
K =	Type K
S =	Type S
T =	Type T

② ③	AWG
36 =	36 gauge solid
30 =	30 gauge solid
24 =	24 gauge solid or 24 gauge stranded (7/32)
20 =	20 gauge solid or 20 gauge stranded (7/28)

④	Conductor Type/Tolerance
1 =	Thermocouple grade, solid wire, standard tolerance
2 =	Thermocouple grade, solid wire, special tolerance
3 =	Thermocouple grade, stranded wire, standard tolerance
4 =	Thermocouple grade, stranded wire, special tolerance
5 =	Extension grade, solid wire, standard tolerance
6 =	Extension grade, solid wire, special tolerance
7 =	Extension grade, stranded wire, standard tolerance
8 =	Extension grade, stranded wire, special tolerance

Note: Minimum order sizes apply for non-stock constructions.

RTD Lead Wire

SERIES 701, 704, 705 and 707

Watlow's quality, experience and versatility extend from insulated thermocouple and extension wire to resistance temperature detector (RTD) lead wire and fiberglass wire.

Performance Capabilities

- Continuous temperature rating: 220 to 900°F (105 to 480°C) depending upon construction
- Available with an optional metallic overbraid for additional abrasion resistance

Applications

- General use RTD sensor wire

Specifications

PVC

Continuous use temperature
- 220°F (105°C)

Single use temperature
- 220°F (105°C)

Resistance properties
- Moisture: Excellent
- Chemical: Good
- Abrasion: Good

FEP

Continuous use temperature
- 400°F (204°C)

Single use temperature
- 500°F (260°C)

Resistance properties
- Moisture: Excellent
- Chemical: Excellent
- Abrasion: Excellent

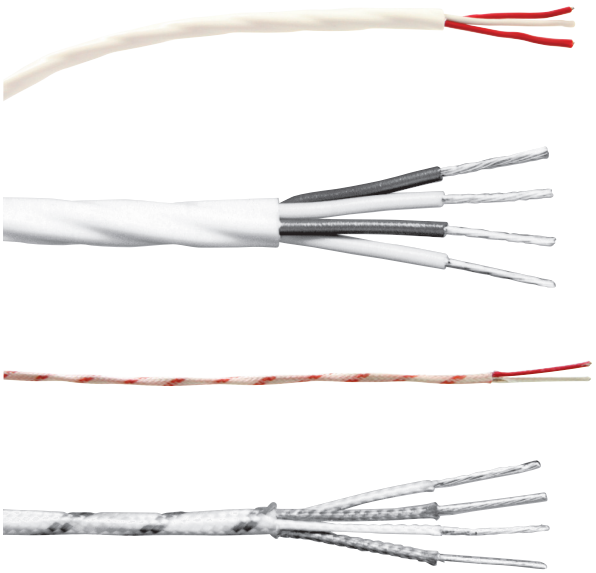

PFA

Continuous use temperature
- 500°F (260°C)

Single use temperature
- 550°F (290°C)

Resistance properties
- Moisture: Excellent
- Chemical: Excellent
- Abrasion: Good

Fiberglass

Continuous use temperature
- 900°F (480°C)

Single use temperature
- 1000°F (540°C)

Resistance properties
- Moisture: Good
- Chemical: Good
- Abrasion: Fair

Popular Constructions

No. of Conductors	AWG	Wire Type*	Insulation Material			
			PVC 220°F (105°C)	FEP 400°F (204°C)	PFA 500°F (260°C)	Fiberglass 900°F (480°C)
2	22	Nickel plated copper	RT2-22-8-701	RT2-22-8-704		RT2-22-8-705
	24	Nickel plated copper	RT2-24-8-701	RT2-24-8-704	RT2-24-8-707	RT2-24-8-705
3	22	Tinned copper	**RT3-22-4-701**			
		Nickel plated copper	RT3-22-8-701	**RT3-22-8-704**		RT3-22-8-705
	24	Nickel plated copper	RT3-24-8-701	RT3-24-8-704	RT3-24-8-707	**RT3-24-8-705**
4	22	Nickel plated copper		RT4-22-8-704		RT4-22-8-705
	24	Nickel plated copper		RT4-24-8-704	RT4-24-8-707	RT4-24-8-705

Note: Bolded products are stocked.

RTD Lead Wire

SERIES 701, 704, 705 and 707 (Continued)

Wire Specifications - SERIES 701 - PVC

No. of Conductors	AWG	Nominal Conductor Size		Nominal Insulation Thickness				Nominal Overall Size		Approximate Shipping Weight	
				Conductor		Overall					
		in.	(mm)	in.	(mm)	in.	(mm)	in.	(mm)	lbs/1000 ft	(kg/km)
2	22S* (7/30)	0.030	(0.762)	0.015	(0.381)	0.020	(0.508)	0.160	(4.06)	17	(25.3)
	20S* (7/28)	0.038	(0.965)	0.015	(0.381)	0.020	(0.508)	0.176	(4.47)	19	(28.3)
3	22S* (7/30)	0.030	(0.762)	0.015	(0.381)	0.020	(0.508)	0.172	(4.37)	20	(29.8)
	20S* (7/28)	0.038	(0.965)	0.015	(0.381)	0.020	(0.508)	0.190	(4.83)	25	(37.3)
4	22S* (7/30)	0.030	(0.762)	0.015	(0.381)	0.020	(0.508)	0.184	(4.67)	23	(34.3)
	20S* (7/28)	0.038	(0.965)	0.015	(0.381)	0.020	(0.508)	0.204	(5.18)	30	(44.7)

Note: 24 and 16 gauge constructions also available, contact factory for details.

Wire Specifications - SERIES 704 - FEP

No. of Conductors	AWG	Nominal Conductor Size		Nominal Insulation Thickness				Nominal Overall Size		Approximate Shipping Weight	
				Conductor		Overall					
		in.	(mm)	in.	(mm)	in.	(mm)	in.	(mm)	lbs/1000 ft	(kg/km)
2	24S* (7/32)	0.024	(0.610)	0.008	(0.203)	0.010	(0.254)	0.118	(3.00)	12	(17.9)
	22S* (7/30)	0.030	(0.762)	0.008	(0.203)	0.010	(0.254)	0.130	(3.30)	14	(20.9)
	20S* (7/28)	0.038	(0.965)	0.008	(0.203)	0.010	(0.254)	0.146	(3.71)	17	(25.3)
3	24S* (7/32)	0.024	(0.610)	0.008	(0.203)	0.010	(0.254)	0.126	(3.20)	16	(23.8)
	22S* (7/30)	0.030	(0.762)	0.008	(0.203)	0.010	(0.254)	0.140	(3.56)	20	(29.8)
	20S* (7/28)	0.038	(0.965)	0.008	(0.203)	0.010	(0.254)	0.158	(4.01)	24	(35.8)
4	24S* (7/32)	0.024	(0.610)	0.008	(0.203)	0.010	(0.254)	0.136	(3.46)	19	(28.3)
	22S* (7/30)	0.030	(0.762)	0.008	(0.203)	0.010	(0.254)	0.150	(3.81)	23	(34.3)
	20S* (7/28)	0.038	(0.965)	0.008	(0.203)	0.010	(0.254)	0.170	(4.32)	27	(40.2)

Wire Specifications - SERIES 707 - PFA

No. of Conductors	AWG	Nominal Conductor Size		Nominal Insulation Thickness				Nominal Overall Size		Approximate Shipping Weight	
				Conductor		Overall					
		in.	(mm)	in.	(mm)	in.	(mm)	in.	(mm)	lbs/1000 ft	(kg/km)
2	24S* (7/32)	0.024	(0.610)	0.008	(0.203)	0.010	(0.254)	0.108	(2.74)	12	(17.9)
3	24S* (7/32)	0.024	(0.610)	0.008	(0.203)	0.010	(0.254)	0.115	(2.91)	16	(23.8)
4	24S* (7/32)	0.024	(0.610)	0.008	(0.203)	0.010	(0.254)	0.126	(3.20)	19	(28.8)

Wire Specifications - SERIES 705 - Fiberglass

No. of Conductors	AWG	Nominal Conductor Size		Nominal Insulation Thickness				Nominal Overall Size		Approximate Shipping Weight	
				Conductor		Overall					
		in.	(mm)	in.	(mm)	in.	(mm)	in.	(mm)	kg/km	(lbs/1000 ft)
2	24S* (7/32)	0.024	(0.610)	0.005	(0.127)	0.006	(0.152)	0.080	(2.03)	6	(8.9)
	22S* (7/30)	0.030	(0.762)	0.005	(0.127)	0.006	(0.152)	0.092	(2.34)	7	(10.4)
	20S* (7/28)	0.038	(0.965)	0.006	(0.152)	0.006	(0.152)	0.112	(2.84)	9	(13.4)
3	24S* (7/32)	0.024	(0.610)	0.005	(0.127)	0.006	(0.152)	0.086	(2.18)	8	(11.9)
	22S* (7/30)	0.030	(0.762)	0.005	(0.127)	0.006	(0.152)	0.098	(2.49)	9	(13.4)
	20S* (7/28)	0.038	(0.965)	0.006	(0.152)	0.006	(0.152)	0.120	(3.05)	12	(17.9)
4	24S* (7/32)	0.024	(0.610)	0.005	(0.127)	0.006	(0.152)	0.092	(2.34)	10	(14.9)
	22S* (7/30)	0.030	(0.762)	0.005	(0.127)	0.006	(0.152)	0.106	(2.69)	12	(17.9)
	20S* (7/28)	0.038	(0.965)	0.006	(0.152)	0.006	(0.152)	0.130	(3.30)	16	(23.8)

* "S" denotes stranded wire: e.g., "24 S (7/32)" is seven strands of 32 gauge wire to make a 24 gauge stranded conductor.

RTD Lead Wire

SERIES 701, 704, 705 and 707 (Continued)

Ordering Information

Part Number

①	②	③	④ ⑤	⑥	⑦ ⑧ ⑨
		Number of Conductors	AWG	Conductor Type/ Tolerance	Insulation Type
R	T				

③	Number of Conductors
2 =	Type 2
3 =	Type 3
4 =	Type 4

④ ⑤	AWG
24 =	24 gauge solid
22 =	22 gauge solid
20 =	20 gauge solid

⑥	Conductor Type/Tolerance
4 =	Stranded tinned copper
8 =	Stranded nickel plated copper

⑦ ⑧ ⑨	Insulation Type
701 =	PVC
704 =	FEP
705 =	Fiberglass
707 =	PFA

Note: Minimum order sizes apply for non-stock constructions.

Product	Description	Page
XACTPAK® Cable	XACTPAK cable is fireproof, high-pressure rated, cold and thermal shock resistant, gas tight, moisture proof, formable, weldable, corrosion resistant and high temperature rated. Diameters down to 0.020 in. (0.5 mm) and temperature ranges from 32 to 2700°F (0 to 1480°C).	**149**

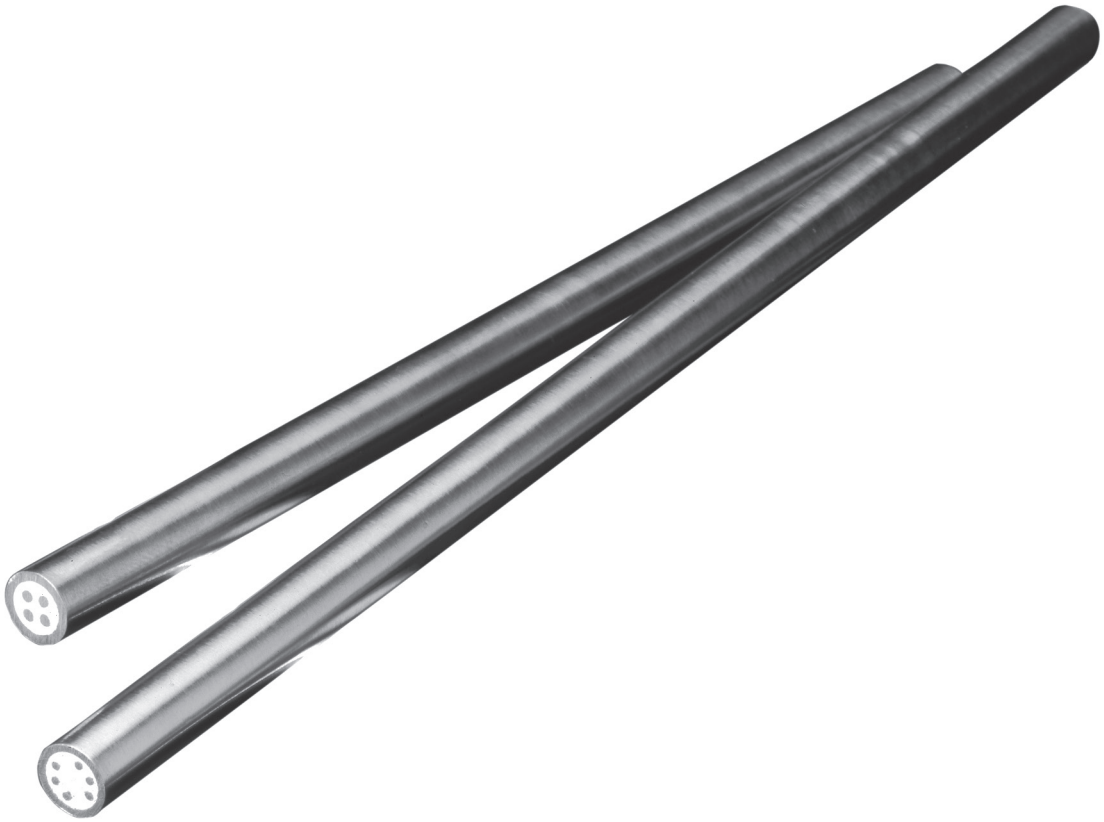

XACTPAK Cable

Watlow's XACTPAK mineral insulated, metal-sheathed cable is ideally suited to solve a wide variety of problem applications.

The outer sheath can be made from any malleable metal in a wide range of diameters, containing single or multiple wires. Easily formed or bent, it can accommodate virtually any configuration. The outer sheath protects thermocouple or thermocouple extension wires from oxidation and hostile environments that would quickly destroy unprotected wire.

The mineral insulations available provide excellent high temperature dielectric strength to ensure signals are carried faithfully to the instrumentation or controls.

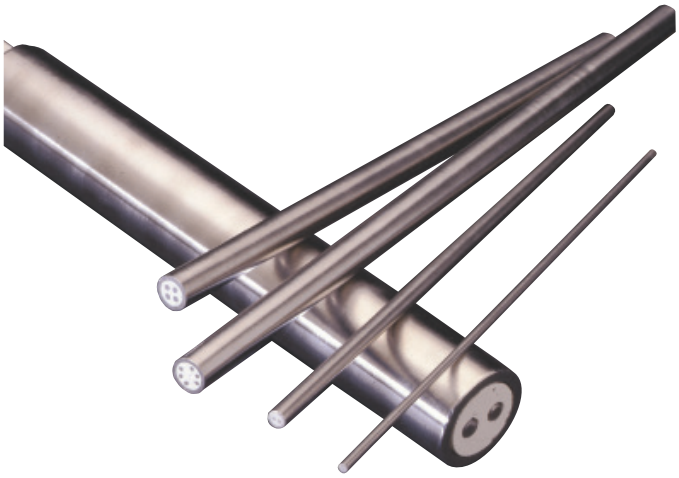

Performance Capabilities

- Available in standard and special limits of error accuracy
- Diameters from 0.020 to 0.5 in. (0.5 to 12.7 mm)
- Compliance with recognized agency tolerances and specifications
- Sheath materials available to withstand a wide variety of hostile and corrosive environments
- Calibrated for intended temperature range
- Temperature ranges from 32 to 2200°F (0 to 1205°C)
- Cryogenic cable available upon request

Features and Benefits

Fireproof cable
- Performs where conventional insulated wires burn and degrade

Fast and accurate
- Precisely measures temperature for a fast response

Tight moisture and gas seals
- Resists contamination

High pressure rating
- Allows use in pressure vessels and vacuum applications

Form flexibility
- Adapts to virtually any application

Thermal shock resistance
- Withstands thermal cycling

Compact, durable and corrosion resistant
- Ensures long-life performance with minimum constraints on applications

High temperature rating
- Meets demanding application needs

Typical Applications

- Atomic research
- Bearing temperature
- Blast furnaces
- Catalytic reformers
- Diesel engines
- Foodservice and beverage
- Furnaces
- Glass and ceramic
- Heat treating
- Instrument cabling
- Jet engines and test cells
- Kilns
- Laboratory and research
- Medical
- Nuclear reactors
- Power stations and steam generators
- Refineries and oil processing
- Rocket engines
- Semiconductor processing
- Turbines
- Vacuum furnaces

XACTPAK Cable

Technical Data

Quality Control and Testing

To maintain quality and consistency, XACTPAK cable is manufactured under carefully controlled procedures and rigid standards of cleanliness. Quality checks are made at critical points throughout the manufacturing process.

Every coil of XACTPAK cable is thoroughly tested for continuity, insulation resistance, physical dimensions and physical appearance.

Each lot, or batch of XACTPAK, contains raw materials (sheath, insulation, wires) from one production lot, which eliminates the need to calibrate every thermocouple cut from a coil because of poor homogeneity. Samples from each lot are calibrated in Watlow's modern calibration laboratory by highly skilled technicians. Unlike some manufacturers who calibrate at a few low temperature calibration points, Watlow® calibrates throughout the range that matches the cable's capabilities.

Care, Handling and Fabrication of XACTPAK Cable

To maximize performance advantages made possible by XACTPAK cable's overall premium quality, the following instructions covering its storage, handling and further fabrication should be followed.

Storage

To prevent moisture from being absorbed by its hygroscopic mineral insulation, both ends of each length of XACTPAK cable are sealed at the factory. To further guard against moisture penetration, it is advisable to store XACTPAK material in a dry place.

Moisture

If XACTPAK cable is not adequately sealed, its insulation absorbs moisture. This lowers its electrical resistance and may prove to be troublesome in subsequent welding. Minor moisture penetration can be remedied by using a blow torch to heat the sheath. Apply the flame six to seven inches from the open end and slowly work the flame to and over the end. Reseal the end after it has cooled to about 180°F (82°C). Deep moisture penetration is unlikely, but if it occurs, the material may be baked at approximately 250°F (121°C) for 24 hours to increase its insulation resistance. If baking does not return the insulation resistance to acceptable levels, the material should be discarded.

Cutting

When pieces are cut from a length of XACTPAK cable, the exposed ends should immediately be squared and sealed. Squaring and sealing guards against possible contamination and removes any loosened insulation or distorted wire caused by cutting. A light pressure sanding with a 180-grit belt is the easiest method for rough squaring of 0.040 in. (1.016 mm) or larger diameter XACTPAK cable. Applying hard pressure against the sanding belt causes excessive heat build-up, which may "smear" the soft metal over the insulation. After sanding, a clean fine-toothed file should be used to dress the squared ends. Each exposed end should be sealed to prevent moisture absorption.

Inexperienced personnel may find 0.032 in. (0.813 mm) or smaller diameter XACTPAK cable difficult to handle and will probably prefer to have all cutting, stripping and fabricating done at the Watlow factory.

Insulation Resistance

XACTPAK mineral insulated, metal-sheathed cable should have a minimum room temperature insulation resistance of 100 megohms when tested at 50VDC for both wires to sheath and wire to wire.

All ceramics used in XACTPAK cable decrease in resistance as temperature increases.

Shipping and Packaging

XACTPAK cable is stocked in random lengths from 20 feet (6 m) to the "Maximum Stock Lengths" listed in the tables on the following pages. We reserve the right to supply random lengths of our choice unless specific cut lengths are specified on the order.

Upon request, XACTPAK cable can be furnished in other coil dimensions or shipped in straight form if necessary. Longer lengths are available for special order.

Stripping

A hand stripping tool will readily remove the sheath from 0.020 through 0.125 in. (3 mm) diameter XACTPAK cable. However, due to difficulty in working with 0.032 in. (0.8 mm) or smaller diameter material, it is recommended that small diameter material be ordered as factory stripped. Material larger than 0.125 in. (3.2 mm) diameter can be stripped on a lathe with a suitable tool bit or lathe-mounted stripping tool. It is also possible to strip larger sizes of XACTPAK cable by using a hacksaw to make a ring cut through the sheath at the desired distance from the end. Hammering the severed portion of sheath at several places will break up the insulation allowing the sheath to be slipped off.

XACTPAK Cable

Technical Data (Continued)

After stripping, the exposed conductors should be sandblasted or cleaned with emery cloth. The exposed ends should be resealed immediately after completion of the stripping operation.

Forming

Because XACTPAK cable's sheath is dead soft and bright annealed, it can be formed and shaped to most contours without risk of cracking. As a guideline, the sheath can be formed around a mandrel twice the sheath diameter without damage. Therefore, 0.125 in. (3.2 mm) diameter XACTPAK cable can be wound around a 0.250 in. (6 mm) diameter mandrel.

Welding

Due to the delicate nature of the process and to avoid possible contamination, it is recommended that fabrication of "hot" or "measuring" junctions be done at the factory. If attempted in the field, a welding rod made from the same material as the sheath should be used with inert gas. Flux should not be used as it will contaminate the insulation.

Other weldments, such as to a vessel or pipe, should be made in an inert atmosphere to prevent oxidation of the sheath. When working with XACTPAK cable of 0.040 in. (1.0 mm) outside diameter or less, extreme caution should be used not to burn through the sheath.

How to Select XACTPAK Cable to Suit Your Requirements

Watlow's mineral insulated metal-sheathed cable section has been designed for ease of use so that the right cable is chosen for each application. The following items must be considered when selecting XACTPAK mineral insulated metal-sheathed cable:

1. Sheath Material

The sheath serves to isolate and protect the wires and insulation from contamination and mechanical damage. There is no single sheath material that is appropriate for all conditions, so Watlow offers a wide variety. Temperature, strength, corrosiveness, service life and cost must be considered when selecting a sheath material.

2. Calibration

Watlow stocks most ANSI/ASTM recognized thermocouple types. Watlow also manufactures cable with other wire alloys such as nickel, copper, nickel clad copper, 304 stainless steel, alloy 600 and virtually any malleable metal.

3. Insulation Material

Insulation separates conductors from each other and the outer sheath. When selecting an insulation, temperature rating, environment and cost must be considered.

4. Physical Characteristics

Diameter of the sheath and the wall thickness will directly affect the following:

- Time response
- Service life
- Flexibility
- Pressure rating
- Strength

5. Specify Coil Lengths

Random—the factory selects 20 ft (6 m) minimum.
Special—specify lengths and tolerance. Cut to length charges and minimum order quantities may apply.

XACTPAK Cable

Sheath Material

The following information is designed to be used as a guide and may not be correct for every application. If in doubt, consult with a Watlow sales engineer or contact the factory.

Part Number

①	② ③	④	⑤	⑥ ⑦	⑧ ⑨ ⑩	⑪ ⑫
	Sheath Material	Calibration	Insulation	Sheath O.D.	Variation	Limits of Error
4	Code Below					

Alloy 600

01—Maximum temperature: 2150°F (1175°C). Most widely used thermocouple sheath material. Good high temperature strength, corrosion resistance, resistance to chloride ion stress corrosion cracking and oxidation resistance to high temperatures. Do not use in sulfur bearing environments. Good for use in nitriding environments.

304 SS

02—Maximum temperature: 1650°F (900°C). Most widely used low temperature sheath material. Extensively used in foodservice equipment, beverage, chemical and other industries where corrosion resistance is required. Subject to damaging carbide precipitation in 900 to 1600°F (480 to 870°C) range. Lowest cost corrosion resistant sheath material available.

316 SS

04—Maximum temperature: 1650°F (900°C). Best corrosion resistance of the austenitic stainless steel grades. Widely used in the foodservice equipment and chemical industry. Subject to damaging carbide precipitation in 900 to 1600°F (482 to 870°C) range.

XACTPAK Cable

Calibration

Part Number

①	② ③	④	⑤	⑥ ⑦	⑧ ⑨ ⑩	⑪ ⑫
	Sheath Material	Calibration	Insulation	Sheath O.D.	Variation	Limits of Error
4		Code Below				

ASTM Type J

1—Type J's positive leg (JP) is iron. Its negative leg (JN) is approximately 45% nickel-55% copper. When protected by compacted mineral insulation and outer sheath, Type J is usable from 32 to 1500°F (0 to 815°C). Type J is not susceptible to short range ordering in the 600 to 1100°F (315 to 593°C) temperature range, (+2 to +4°F drift), which occurs with ASTM Type E and K. This low cost, stable thermocouple calibration is primarily used with 96 percent pure magnesium oxide (MgO) insulation and stainless steel sheath.

ASTM Type K

2—Type K's positive leg (KP) is approximately 90% nickel-10% chromium. Its negative leg (KN) is approximately 95% nickel-2% aluminum-2% manganese-one percent silicon. When protected by compacted mineral insulation and outer sheath, Type K is usable from 32 to 2300°F (0 to 1260°C). If the application is 600 to 1100°F (315 to 593°C), we recommend Type J or N due to short range ordering that can cause drift of +2 to +4°F (+1.5 to +2°C) in a few hours time. Type K is relatively stable during radiation transmission in nuclear environments. For applications below 32°F (0°C), special alloy selections are usually required.

ASTM Type T

3—Type T's positive leg (TP) is pure copper. Its negative leg (TN) is approximately 45% nickel-55% copper. When protected by compacted mineral insulation and outer sheath, Type T is usable from 32 to 660°F (0 to 350°C) and very stable in cryogenic and low temperature applications. For applications below 32°F (0°C) special alloy selections may be required.

ASTM Type E

4—Type E's positive leg (EP) is approximately 90% nickel-10% chromium. Its negative leg (EN) is approximately 45% nickel-55% copper. When protected by compacted mineral insulation and outer sheath, Type E is usable from 32 to 1650°F (0 to 900°C) and has the highest electromotive force (EMF) output per degree of all ASTM types. If the application temperature is 600 to 1100°F (315 to 593°C) Type J or N is recommended due to short range ordering, which can cause drift of +1 to +3°F in a few hours time. For applications below 32°F (0°C), special alloy selections may be required.

ASTM Type N

8—Type N's positive leg (nicrosil) is approximately 14% chromium-1.4% silicon-84.6 nickel. Its negative leg (nisil) is approximately 4.4% silicon-95.6% nickel. When protected by compacted mineral insulation and outer sheath, is usable from 32 to 2300°F (0 to 1260°C). Type N overcomes several problems inherent in Type K. Short range ordering, +2 to +4°F drift (+1.5 to +2°C), in the 600 to 1100°F (315 to 593°C) range is greatly reduced, and drift rate at high temperatures is considerably less. Type N is also more stable than Type K in nuclear environments.

Miscellaneous

9—Contact the factory.

XACTPAK Cable

Insulation

Part Number

①	② ③	④	⑤	⑥ ⑦	⑧ ⑨ ⑩	⑪ ⑫
	Sheath Material	Calibration	Insulation	Sheath O.D.	Variation	Limits of Error
4			Code Below			

High Purity Magnesium Oxide (MgO) 99.4 Percent Minimum Purity

1—Low impurity levels make this insulation very useful for all thermocouple calibrations up to 2500°F (1370°C). Above 2500°F (1371°C), Watlow recommends using hafnia oxide insulation because of MgO's low resistivity. This material meets the requirements established in ASTM E-235.

Magnesium Oxide (MgO) 96% Minimum Purity

5—This low cost insulation is similar to high purity MgO (1) except it should be used in applications below 2000°F (1095°C) due to impurity levels. This insulation should not be used with platinum or in nuclear applications.

XACTPAK Cable

Sheath O.D.

Part Number

①	② ③	④	⑤	⑥ ⑦	⑧ ⑨ ⑩	⑪ ⑫
4	Sheath Material	Calibration	Insulation	Sheath O.D. Code Below	Variation	Limits of Error

Code	Sheath Diameter		Approximate Standard	Coil Weight lbs/100 ft	Average Response Time* Still Water (seconds)	
	Nominal	Tolerance			G-JCT	U-JCT
01	0.020 inch	+0.001, -0.0005	9 inch	0.08	<0.02	0.03
02	0.032 inch	+0.001, -0.0005	9 inch	0.20	0.02	0.07
03	0.040 inch	+0.001, -0.0005	9 inch	0.32	0.04	0.13
04	0.063 inch	±0.001	24 inch	0.74	0.22	0.40
07	0.125 inch	+0.002, -0.001	24 inch	3.00	0.50	1.10
08	0.188 inch	+0.002, -0.001	24 inch	6.65	1.00	2.30
11	0.250 inch	+0.003, -0.001	24 inch	11.65	2.20	4.10
13	0.375 inch	+0.003, -0.001	Straight or 40 inch coils	28.10	8.00	11.00
15	0.500 inch	+0.003, -0.001	Straight or 40 inch	47.00	15.00	20.00
51	0.5 mm	±0.02	23 cm	0.08	<0.02	0.03
52	1.0 mm	±0.02	23 cm	0.32	0.04	0.13
53	1.5 mm	±0.02	61 cm	0.65	<0.15	0.35
54	2.0 mm	±0.03	61 cm	1.13	0.25	0.55
55	3.0 mm	±0.03	61 cm	2.60	0.40	0.90
56	4.5 mm	±0.03	61 cm	6.00	0.95	2.00
57	6.0 mm	±0.05	61 cm	10.50	2.00	3.50

* **Note:** First order response time 63.2 percent.

XACTPAK Cable

Variations

Part Number

①	② ③	④	⑤	⑥ ⑦	⑧ ⑨ ⑩	⑪ ⑫
	Sheath Material	Calibration	Insulation	Sheath O.D.	Variation	Limits of Error
4					Code Below	

⑧ ⑨ ⑩	Variation
050 =	Dual adjacent
Note: Leave space blank for no variation	

Limits of Error

Part Number

①	② ③	④	⑤	⑥ ⑦	⑧ ⑨ ⑩	⑪ ⑫
	Sheath Material	Calibration	Insulation	Sheath O.D.	Variation	Limits of Error
4						Code Below

⑪ ⑫	Limits of Error
Standard =	Leave blank
SP =	Special limits initial tolerance

XACTPAK Cable

Sheath Material

Extended capabilities go beyond the functionality offered by catalog products. These offerings are only available for large quantity orders.

310 SS
Maximum temperature: 2100°F (1150°C). Mechanical and corrosion resistance, similar to but better than 304 SS. Very good heat resistance. This alloy contains 25 percent chromium, 20 percent nickel. Not as ductile as 304 SS.

347 SS
Maximum temperature: 1600°F (870°C). Similar to 304 SS except nickel niobium stabilized. This alloy is designed to overcome susceptibility to carbide precipitation in the 900 to 1600°F (480 to 870°C) range. Used in aerospace and chemical applications.

446 SS
Maximum temperature: 2100°F (1150°C). Ferritic stainless steel with good resistance to sulfurous atmospheres at high temperatures. Good corrosion resistance to nitric acid, sulfuric acid and most alkalies. 27% chromium content gives this alloy the highest heat resistance of any ferritic stainless steel.

321 SS
Maximum temperature: 1600°F (870°C). Similar to 304 SS except titanium stabilized for inter-granular corrosion. This alloy is designed to overcome susceptibility to carbon precipitation in the 900 to 1600°F (480 to 870°C) range. Used in aerospace and chemical applications.

Inconel® 601
Maximum temperature: 2150°F (1175°C) continuous, 2300°F (1260°C) intermittent. Similar to alloy 600 with the addition of aluminum for outstanding oxidation resistance. Designed for high temperature corrosion resistance. This material is good for use in carburizing environments and exhibits good creep rupture strength. Do not use in vacuum furnaces. Susceptible to intergranular attack by prolonged heating in 1000 to 1400°F (540 to 760°C) temperature range.

Haynes® Alloy HR-160
Maximum temperature: 2150°F (1175°C). Developed to provide superior sulfidation-resistance at high temperatures. This alloy exhibits good resistance to corrosion in some salt bath applications. Used in applications for sulfur furnaces, waste incinerators, coke burners, recuperators, cement kilns and high temperature furnaces.

Haynes® Alloy 718
Maximum temperature: 1300°F (700°C). A precipitation hardenable Inconel® alloy developed for corrosion resistance and excellent weldability. Application uses include gas turbine, aerospace, oil and gas production and nuclear.

Insulation

Alumina Oxide (Al_2O_3) 99.6 Percent Minimum Purity
Although this material is comparable to MgO in its electrical properties and cost, it does not compact well and tends to “powder out.” This undesirable characteristic has made this insulation unpopular, therefore, cable with this type of insulation is available only as a special order.

Hafnia Oxide (HfO_2)
Hafnia is used as a substitute for beryllia oxidez (BeO) because of beryllia’s toxicity problem. The temperature limit of hafnia is 4530°F (2500°C), which is higher than BeO.

Variations

- Triple element
- Heavy wall (approximately 20 percent heavier)

XACTPAK Cable

Single Element Cable

Standard Limit Code Number	Special Limits of Error Code Number	Sheath Diameter	Sheath Material	Calibration	Nominal AWG Gauge	Nominal Wall Thickness (in.)	Max. Recommended Operating Temp °F (°C)
401-2101	401-2101-SP	0.020	Alloy 600	K	38	0.003	1600 (871)
401-2102	401-2102-SP	0.032	Alloy 600	K	34	0.004	1600 (871)
401-2103	401-2103-SP	0.040	Alloy 600	K	32	0.006	1600 (871)
402-2103	402-2103-SP	0.040	304 SS	K	32	0.006	1600 (871)
404-2103	404-2103-SP	0.040	316 SS	K	32	0.009	1600 (871)
401-2104	401-2104-SP	0.063	Alloy 600	K	28	0.009	2000 (1093)
N/A	401-2104-HT ①	0.063	Alloy 600	K	28	0.009	2000 (1093)
404-2104	404-2104-SP	0.063	316 SS	K	28	0.012	1600 (871)
401-2107	401-2107-SP	0.125	Alloy 600	K	22	0.017	2150 (1177)
N/A	401-2107-HT ①	0.125	Alloy 600	K	22	0.017	2150 (1177)
402-1507	402-1507-SP	0.125	304 SS	J	22	0.017	1500 (816)
402-2507	402-2507-SP	0.125	304 SS	K	22	0.017	1600 (871)
404-2507	404-2507-SP	0.125	316 SS	K	22	0.017	1600 (871)
401-2108	401-2108-SP	0.188	Alloy 600	K	19	0.025	2150 (1177)
402-1508	402-1508-SP	0.188	304 SS	J	19	0.025	1500 (816)
402-2508	402-2508-SP	0.188	304 SS	K	19	0.025	1600 (871)
404-2508	404-2508-SP	0.188	316 SS	K	19	0.025	1600 (871)
401-2111	401-2111-SP	0.250	Alloy 600	K	16	0.033	2150 (1177)
402-1511	402-1511-SP	0.250	304 SS	J	16	0.033	1500 (816)
402-2511	402-2511-SP	0.250	304 SS	K	16	0.033	1600 (871)
404-1511	404-1511-SP	0.250	316 SS	J	16	0.033	1500 (816)
404-2511	404-2511-SP	0.250	316 SS	K	16	0.033	1600 (871)
401-2113	401-2113-SP	0.375	Alloy 600	K	13	0.051	2150 (1177)

①This cable is designed for heat treat applications where stability and calibration per AMS2750 are required.

Double Element Cable

Standard Limit Code Number	Special Limits of Error Code Number	Sheath Diameter	Sheath Material	Calibration	Nominal AWG Gauge	Nominal Wall Thickness (in.)	Max. Recommended Operating Temp °F (°C)
401-2104-050	401-2104-050-SP	0.063	Alloy 600	K	28	0.009	2000 (1093)
401-2107-050	401-2107-050-SP	0.125	Alloy 600	K	24	0.017	2000 (1093)
401-2108-050	401-2108-050-SP	0.188	Alloy 600	K	21	0.025	2150 (1177)
401-2111-050	401-2111-050-SP	0.250	Alloy 600	K	18	0.033	2150 (1177)

XACTPAK Cable

Mineral Insulated Metal-Sheathed RTD Cable

This cable is used for making rugged resistance temperature detector (RTD) probes. Special spacing allows room for elements to be placed between conductors. Dimensions are shown below.

Ordering Information

Part Number

①	② ③	④	⑤	⑥ ⑦	⑧ ⑨ ⑩
	Sheath Material	Wire	Wire Insulation	Sheath O.D.	Variation
4		9			

② ③	Sheath Material
01 =	Alloy 600
04 =	316 SS

④	Wire
9 =	Nickel 201

⑤	Wire Insulation
1 =	99.4% MgO
5 =	96% MgO

⑥ ⑦	Sheath O.D.
07 =	0.125 in. (3 mm) diameter
08 =	0.188 in. (4.8 mm) diameter
11 =	0.250 in. (6 mm) diameter

⑧ ⑨ ⑩	Variation
001 =	6-wire
003 =	4-wire

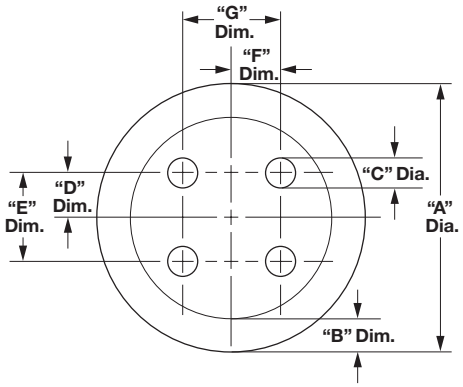

4 Conductor RTD MIMS Cable

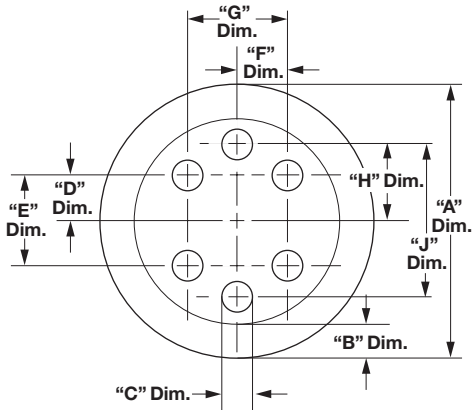

6 Conductor RTD MIMS Cable

A Diameter	B Wall Thickness	C Diameter	Spacing Nominal			
			D Dim.	E Dim.	F Dim.	G Dim.
0.125 +0.002 -0.001	0.015 ± 0.002	0.014 ± 0.002	0.022	0.045	0.025	0.050
0.188 +0.002 -0.001	0.023 ± 0.002	0.020 ± 0.002	0.034	0.068	0.037	0.074
0.250 +0.003 -0.001	0.030 ± 0.005	0.027 ± 0.003	0.045	0.090	0.050	0.100

A Dim.	B Dim.	C Dim.	D Dim.	E Dim.	F Dim.	G Dim.	H Dim.	J Dim.
0.125 +0.002 -0.001	0.015 ± 0.002	0.014 ± 0.002	0.022	0.045	0.025	0.050	0.034	0.068
0.188 +0.002 -0.001	0.023 ± 0.002	0.020 ± 0.002	0.034	0.068	0.037	0.074	0.052	0.104
0.250 +0.003 -0.001	0.030 ± 0.005	0.027 ± 0.003	0.045	0.090	0.050	0.100	0.068	0.137

XACTPAK Cable

Made-to-order Mineral Insulated (MI) Cable

Ordering Information

Part Number

①	②③ Sheath Material	④ Calibration	⑤ Insulation	⑥⑦ Sheath O.D.	⑧⑨⑩ Variation	⑪⑫ Limits of Error
4						

②③	Sheath Material
01 =	Alloy 600
02 =	304 SS
04 =	316 SS

④	Calibration
1 =	J
2 =	K
3 =	T
4 =	E
8 =	N

⑤	Insulation
0 =	Unused
1 =	Magnesium oxide 99.4%
5 =	Magnesium oxide 96%

⑥⑦	Sheath O.D. in. (mm)
01 =	0.020 (0.6)
02 =	0.032 (0.8)
03 =	0.040 (1.0)
04 =	0.063 (1.6)
07 =	0.125 (3)
08 =	0.188 (4.8)
11 =	0.250 (6)
13 =	0.375 (9.5)
15 =	0.500 (13)

⑧⑨⑩	Variation
050 =	Dual adjacent — Example: 401-2107-050
Note: Leave space blank for no variation	

⑪⑫	Limits of Error
SP =	Special limits — Example: 401-2107-SP
Note: Leave space blank for standard	

Table of Contents

Product Selection Guide 163

Output Comparison Guide 167

Temperature and Process 168

F4T® ... WATLOW SELECT 168
EZ-ZONE® RM... WATLOW SELECT 179
RMA PLUS™ Remote Access Module... WATLOW SELECT 197
EZ-ZONE RMZ/RMF 200
EZ-ZONE RMG 202
EZ-ZONE RMT 204
PM PLUS™ ... WATLOW SELECT 206
PM LEGACY™ 214
POWERGLIDE® 220
EZ-ZONE ST 222
SERIES EHG® SL10 229
SERIES EHG 233
SERIES CF 235
SERIES CV 238

Power Switching Devices 245

ASPYRE DT 245
DIN-A-MITE® A ... WATLOW SELECT 252
DIN-A-MITE B ... WATLOW SELECT 255
DIN-A-MITE C ... WATLOW SELECT 258
DIN-A-MITE D ... WATLOW SELECT 264
Solid State Relays (SSR) 267

Limits and Scanners 271

PM LEGACY 272
EZ-ZONE RM... WATLOW SELECT 276
SERIES LF 282
SERIES LV 285
SERIES LS 288

Data Loggers 290

D4T™ 1/4 DIN ... WATLOW SELECT 290
RMA PLUS Remote Access Module ... WATLOW SELECT 295

Operator Interfaces and Indicators 298
Silver Series EM 298
EZ-ZONE RUI and Gateway 304
SERIES TM 308

Software 310
COMPOSER® 310
EZ-LINK™ Mobile App 312
ASPYRE Configurator 314
EZ-ZONE Configurator 315
EZ-ZONE LabVIEW™ Driver 317
EZ-ZONE GSD Editor 318
EHG SL10 Software 319
SpecView SCADA Software 320
EZ-warePLUS 325

Control Panels 327
WATCONNECT® 327
WATCONNECT C1 333

Accessories 337
Communication Adapters 337
Combined Branch Protection and Semiconductor Fusing 339
Semiconductor Fuses 341
Current Transformers 342
Panel Mount Adapter Plates 343
Power Supplies 344

Industry 4.0 Products 347
F4T ... WATLOW SELECT 347
D4T 1/4 DIN ... WATLOW SELECT 358
RMA PLUS Remote Access Module ... WATLOW SELECT 363
EZ-LINK Mobile App 366
EZ-ZONE RMG 368
EZ-ZONE RMT 370
POWERGLIDE 372
Silver Series EM 374

Temperature and Process Controllers

	Maximum Control Loops	Maximum Limit Loops	Maximum Monitor Channels	Fiber Optic Temperature Measurement	Profiling	Mounting	Maximum Output (A)	Ambient Operating Range °F	Ambient Operating Range °C	Communication Protocols	Dimensions
F4T®  See page 168	4	6	24	—	✓	1/4 DIN front panel or flush mount	12A	0 to 122	-18 to 50	Standard bus, Modbus® TCP (Ethernet), Modbus® RTU, SCPI, USB host (2), USB device	Dimensions vary based on mounting style
EZ-ZONE® RM (C, E, A, H, S, L)  See page 179	152	192	256	—	✓	DIN-rail	15A	0 to 149	-18 to 65	Standard bus, EtherNet/IP™, DeviceNet™, PROFIBUS DP, Modbus® TCP, Modbus® RTU	Per module: 2.03 in. W x 4.41 in. H x 6.1 in. D (51.56 mm W x 44.45 mm H x 148 mm D)
EZ-ZONE RMF  See page 200	8	—	8	✓	—	DIN-rail	—	0 to 149	-18 to 65	Standard bus, EtherNet/IP™, DeviceNet™, PROFIBUS DP, Modbus® TCP, Modbus® RTU	Per module: 2.03 in. W x 4.41 in. H x 6.1 in. D (51.56 mm W x 44.45 mm H x 148 mm D)
EZ-ZONE RMZ  See page 200	48	—	—	✓	—	DIN-rail	—	0 to 149	-18 to 65	EtherCAT®, Standard bus, EtherNet/IP™, DeviceNet™, PROFIBUS DP, Modbus® TCP, Modbus® RTU	Per module: 2.03 in. W x 4.41 in. H x 6.1 in. D (51.56 mm W x 44.45 mm H x 148 mm D)
EZ-ZONE RMG  See page 202											
EZ-ZONE RMT  See page 204											
PM PLUS™  See page 206				—	✓	1/16 DIN front panel	15A			Standard bus, EtherNet/IP™, DeviceNet™, PROFIBUS DP, Modbus® TCP, Modbus® RTU	

Temperature and Process Controllers

	Maximum Control Loops	Maximum Limit Loops	Maximum Monitor Channels	Fiber Optic Temperature Measurement	Profiling	Mounting	Maximum Output (A)	Ambient Operating Range °F	Ambient Operating Range °C	Communication Protocols	Dimensions
PM LEGACY™  See page 214				—	1/32	1/32, 1/16, DIN front panel	15A			Standard bus, Modbus® RTU	
POWERGLIDE®  See page 220											
EZ-ZONE ST  See page 222	1	1	—	—	✓	DIN-rail	75A	0 to 158	-18 to 70	Standard bus, Modbus® RTU	With 25 or 40A heat sink: 7.43 in. H x 2.5 in. W x 6.14 in. D (188.6 mm H x 63.5 mm W x 156 mm D) (See details for size with other options)
SERIES EHG® SL10  See page 224	1	1	—	—	—	In-line, sub panel	10A	32 to 158	0 to 70	Modbus® RTU	3.496 in. W x 2.196 in. H x 1.907 in. D (88.80 mm W x 55.78 mm H x 48.07 mm D) without optional module
SERIES EHG  See page 233	1	—	—	—	—	In-line	10A	32 to 158	0 to 70	—	3.75 in. L x 1.85 in. D (95.25 mm L x 47 mm D)
SERIES CF  See page 235	1	—	—	—	—	DIN-rail, front panel, chassis	8A	32 to 158	0 to 70	—	Front panel mount: 2.85 in. W x 2.85 in. H x 2.04 in. D (72.4 mm W x 72.4 mm H x 51.7 mm D)
SERIES CV  See page 238	1	—	—	—	—	DIN-rail, front panel, chassis	8A	32 to 158	0 to 70	—	Front panel mount: 2.85 in. W x 2.85 in. H x 2.04 in. D (72.4 mm W x 72.4 mm H x 51.7 mm D)

Power Switching Devices

	Maximum Current	Phase Configurations	Inputs	Output Firing	Data Logging	Connectivity	Closed Loop V, I, P Contol	Mounting	Other Features	Ambient Operating Range °F	Ambient Operating Range °C	Dimensions
ASPYRE® AT 	48A	1	1 analog (0-10VDC or 4-20mA) 2 digital	Zero-cross, Burst firing, Phase angle, Soft start	No	Modbus® RTU, Watlow Intermodule Bus, USB port for config up/ download	Yes	DIN-rail, back panel, cooling plate	High accuracy V.I.P. measure-ment, Heater bakeout	32 to 140	0 to 60	6.68 in. H x 1.59 in. W x 5.93 in. D (24A) or 7.15 in. D (48A)
ASPYRE DT  See page 245	2400A	1 or 3	2 analog (0-5VDC or 4-20mA) 2 digital	Zero-cross, Single cycle, Burst firing, Phase angle, Delayed triggering	Yes	Profibus DP, Modbus® RTU, Modbus® TCP (Ethernet), ProfiNet, USB port for config up/ download	Yes	Back panel	OLED display, Heater bakeout	32 to 140	0 to 60	4.77 in. H x 2.84 in. W x 7.28 in. D (smallest) to 20.47 in. H x 10.32 in. W x 10.63 in. D (largest)
DIN-A-MITE® A  See page 252	25A	1	VAC/VDC contactor, 4-20mA	Zero-cross	No	No	No	DIN-rail, back panel	—	0 to 176	-18 to 80	3.7 in. H x 1.8 in. W x 3.9 in. D (95 mm H x 45 mm W x 98 mm D)
DIN-A-MITE B  See page 255	40A	1 or 3	VAC/VDC contactor, 4-20mA, multi-zone input	Zero-cross	No	No	No	DIN-rail, back panel	Shorted SCR alarm	0 to 176	-18 to 80	3.7 in. H x 3.1 in. W x 4.9 in. D (95 mm H x 80 mm W x 124 mm D)
DIN-A-MITE C  See page 258	80A	1 or 3	VAC/VDC contactor, 4-20mA, multi-zone input, linear voltage, potentiom-eter	Zero-cross, phase angle	No	No	No	DIN-rail, through wall, back panel	Shorted SCR alarm, open heater alarm on zero-cross, current limit	0 to 176	-18 to 80	DIN-rail mount, without fan: 5.45 in. H x 3.25 in. W x 5.89 in. D (138 mm H x 83 mm W x 150 mm D)
DIN-A-MITE D  See page 264	100A	1	VAC/VDC contactor, 4-20mA	Zero-cross	No	No	No	Back panel	Shorted SCR alarm, load current monitor	0 to 176	-18 to 80	7.25 in. H x 2.5 in. W x 9.4 in. D (185 mm H x 65 mm W x 240 mm D)
Solid State Relays (SSR)  See page 267	75A	1	VAC/VDC contactor	Zero-cross, random fire	No	No	No	Back panel	Shorted SSR alarm, 20A DC output, 4 to 20mA dc variable time base firing	-40 to 185	-40 to 85	Without heat sink: 2.25 in. H x 1.75 in. W x 0.9 in. D (57.2 mm H x 44.5 mm W x 23 mm D)

Limits and Scanners

	Maximum Limit Loops	Maximum Monitor Channels	Mounting	Maximum Output (A)	Ambient Operating Range °F	Ambient Operating Range °C	Communication Protocols	Dimensions
PM LEGACY  See page 271								
EZ-ZONE RM (S, L)  See page 276	192	256	DIN-rail	15A	0 to 149	-18 to 65	Standard bus, EtherNet/IP™, DeviceNet™, PROFIBUS DP, Modbus® TCP, Modbus® RTU	Per module: 2.03 in. W x 4.41 in. H x 6.1 in. D (51.56 mm W x 44.45 mm H x 148 mm D)
SERIES LF  See page 282	1	1	DIN-rail, front panel, chassis	8A	32 to 158	0 to 70	—	DIN-rail mount: 3.08 in. W x 4.42 in. H x 3.57 in. D (78.1 mm W x 122.3 mm H x 90.7 mm D
SERIES LV  See page 285	1	1	DIN-rail, front panel, chassis	8A	32 to 158	0 to 70	—	Front panel mount: 2.85 in. W x 2.85 in. H x 2.04 in. D (72.4 mm W x 72.4 mm H x 51.7 mm D)
SERIES LS  See page 288	1	1	Potted case with mounting screws	5A	32 to 158	0 to 70	—	3.5 in. W x 1.38 in. H x 2.76 in. D (88.9 mm W x 35.1 mm H x 70.1 mm D)

Output Comparison Guide

I want to switch... I want to control...	Controller Output	Output Life
• DC input solid state relay (SSR) • PLC-dc input • Low voltage panel lamp	Switched dc, open collector	
• Resistive 120 or 240VAC heater at less than 15A	NO-ARC 15A power control	
• AC input SSR • AC input solid state contactor • High impedance load, typ. ≥5kΩ • Piezoelectric buzzer • Indicator lamps	Solid state relay, Form A	
• Solenoid coil/valve • Mercury displacement relay (MDR) • Electromechanical relay • General purpose contactor	Solid state relay, Form A with external contact suppression	
• Various devices in on-off mode with contact suppression	Electromechanical relay, Form A	
• Various high impedance or inductive devices in on-off mode with coils suppressed • Indicator lamps • Small heaters • AC input solid state contactor	Electromechanical relay, Form A or C	
• A safety limit circuit with contactor, electromechanical relay or MDR	Electromechanical relay, Form A with external contact suppression	N/A
• Various devices in on-off mode • Solenoid coil/valve • MDR • Electromechanical relay • General purpose contactor • Pilot duty relays	Electromechanical relay, Form C with external contact suppression	
• Phase-angle or burst fire SCRs • 0-20mA(dc), 4-20mA dc , 0-5VDC, 1-5VDC or 0-10VDC valve positioner • Inner loop's set point for cascading controllers • Other instruments with process inputs	Universal process	

Retransmit/Alarms

I want to switch... I want to control...	Controller Output	Output Life
• Multiple devices, impedance dependent • Chart recorder • Master-remote (slave) system • Data logging device	Universal process	
• Various devices in on-off mode	Electromechanical relay, Form A or C	

 **Best Life**

 **Better Life**

 **Good Life**

F4T®

The F4T® temperature process controller offers a wide range of field removable I/O modules for maximum design flexibility. Configurations can be custom tailored to meet the scaling needs of a tremendous range of equipment and applications while providing exactly the hardware types required for compatibility. The F4T controller also features a 4.3 inch, color, graphical touch panel. Combining power, flexibility and functionality, this new controller offers unmatched versatility, and its best-in-class ease of use could very well make user manuals a thing of the past.

Watlow's F4T is available through Watlow ***SELECT***®, a program that enables you to quickly identify, configure and receive your thermal products faster and easier than ever before. With ***SELECT***, you use a variety of tools to guide your decision, configure products for an exact fit and quickly receive your order. Visit www.watlow.com/select to learn more

Features and Benefits

4.3-inch, color touch panel with high-resolution, graphical user-interface

- Shortens learning curve and reduces operator errors
- Allows channels, profiles, alarms, inputs and outputs to be personalized with user defined names

Temperature PID, data logger, trend chart, over/under-temperature limit, power switching, math, logic, timers and counters combined into an integrated system

- Lowers ownership costs
- Eliminates the need for separate discrete components
- Reduces complexity
- Simplifies design, ordering and installation
- Saves money

Robust algorithms for temperature, cascade, altitude, humidity and compressor

- Improves process control
- Offers one to four channels of control
- Provides multiple PID sets
- Enables TRU-TUNE®+ adaptive control algorithm
- Offers 40 ramp and soak profiles with real-time clock and battery backup

Email and text alerts

- Notifies users of an event that has occurred such as specific profile or step within a profile, alarm condition, limit condition or analog input error

COMPOSER® graphical configuration PC software

- Speeds up and simplifies commissioning
- Archives and documents controller setup
- Connects with controller easily via Ethernet



Many communications options available including Ethernet/IP™, Modbus® TCP (Ethernet) SCPI and EIA-232/485 Modbus® RTU

- Offers two USB host ports and one device port
- Simplifies file transfers
- Connects easily

Batch processing with bar code data entry

- Easily collects and manages data records
- Inputs information from bar code scan for fast and easy data entry
- Offers foolproof processing via smart profile to part linkage
- Provides data security through password and data log encrypted file options
- Improves manufacturing robustness via reminder screens ensuring all data is entered during processing
- Helps ensure compliance with growing regulations and minimizes warranty exposure
- Eliminates part processing skips or walk arounds due to improved quality control
- Produces formatted data record report for easy receipt or record management uses

Modular design

- Adapts quickly to evolving requirements
- Offers numerous types of field pluggable modules for maximum flexibility and easiest compatibility
- Features scalable and modular firmware functions
- Delivers scalable input/output quantities from 1 to 36

SERIES F4S/F4D/F4P backward compatible

- Provides easy retrofit with minimum pain and disruption
- Ensures proper fit in existing SERIES F4 panel cutout

F4T

Key Features and Options

- 1 to 4 control loops with TRU-TUNE+ adaptive control algorithm for superior controllability
- 40 profiles for ramp and soak
- EtherNet/IP™
- Ethernet Over Modbus® TCP connectivity
- Multiple high-speed USB host ports
- Over/under-temperature limits for safety shutdown
- Universal, thermistor and ac current measurement inputs
- Inputs and outputs expandable from 1 to 36
- SENSOR GUARD prevents unplanned process shutdowns and product loss by switching to a backup sensor if the primary sensor fails
- High current outputs for up to 10A heaters or other loads
- Programmable timers, counters, math and logic
- Temperature, cascade, altitude, relative humidity, compressor algorithms and Vaisala® humidity compensation
- Sequencer start-up and control
- Retransmit and remote set point
- USB configuration port
- Configuration settings can be stored and recalled
- Removable modules and connectors
- Front-panel mount and flush mounting options
- Right angle and front-screw terminal options
- UL® listed, CSA, CE, RoHS, W.E.E.E., FM
- Multi-language options
  - English, German, French, Italian, Spanish, Japanese, Korean and Chinese
- USB wired or wireless mouse user interface
  - Use in hazardous location, dirty environments or applications with gloves

Common Specifications

Line Voltage/Power

- Data retention upon power failure via nonvolatile memory

Functional Operating Range

- Type J: -346 to 2192°F (-210 to 1200°C)
- Type K: -454 to 2500°F (-270 to 1371°C)
- Type T: -454 to 750°F (-270 to 400°C)
- Type E: -454 to 1832°F (-270 to 1000°C)
- Type N: -454 to 2372°F (-270 to 1300°C)
- Type C: 32 to 4200°F (0 to 2315°C)
- Type D: 32 to 4200°F (0 to 2315°C)
- Type F: 32 to 2449°F (0 to 1343°C)
- Type R: -58 to 3214°F (-50 to 1767°C)
- Type S: -58 to 3214°F (-50 to 1767°C)
- Type B: 32 to 3300°F (0 to 1816°C)
- RTD (DIN): -328 to 1472°F (-200 to 800°C)
- Process: -1999 to 9999 units

Calibration Accuracy

- Calibration accuracy and sensor conformity: ±0.1% of span, ±1°C at the calibrated ambient temperature and rated line voltage
  - Types R, S, B: ±0.2%
  - Type T below -50°C: ±0.2%
- Calibration ambient temperature at 77°F ±5°F (25°C ±3°C)
- Accuracy span: 1000°F (540°C) min.
- Temperature stability: Typical ±0.1°F/°F (±0.1°C/°C) rise in ambient max.

Configuration Diagnostics

- Indicates if modules present match the expected configuration settings

USB Host Port

- Total of 2 available
- Version: USB 2.0 hi-speed
- Connector: USB Type A, high-retention
- Flash drive must be FAT32 file system
- Max. current 0.5A/port

System Configuration Requirements

- F4T has 6 slots for flex modules (FM)
- EIA-232/485 Modbus® RTU flex module, if used, must occupy slot 6 location
- A maximum of two 10A SSR FM modules can be used in the F4T and each will require space for 2 slots. Valid in slots 1, 2, 4 or 5

Wiring Termination—Touch-Safe Terminals

- Right-angle and front-screw terminal blocks for input, output and power supply connections
- Input, output and power terminals: Touch safe, removable, 12 to 30 AWG

F4T Base Specifications

Line Voltage/Power

- High voltage option: 100 to 240VAC +10/-15%, 50/60Hz ±5%
- Low voltage option: 24 to 28VAC/VDC+10/-15%, 50/60Hz ±5%
- Power consumption: 23 W, 54VA

User Interface

- 4.3 inch TFT PCAP color graphic touch screen
- LED backlife >50K hours
- 4 keys: Home, Main Menu, Back, Help
- Multiple languages
  - English, German, French, Italian, Spanish, Japanese, Korean and Chinese
- USB wired or wireless mouse functionality
  - Right click for 4 keys: Home, Main Menu, Back, Help

F4T

Environment
- NEMA 4X/IP65 front panel mount configuration only
- Operating temperature: 0 to 122°F (-18 to 50°C)
- Storage temperature: -40 to 185°F (-40 to 85°C)
- Relative humidity: 0 to 90%, non-condensing

Agency Approvals
- UL®/EN 61010 Listed, File E185611 QUYX
- UL® 508 Reviewed
- CSA CC.C#14, File 158031
- FM Class 3545 (configurations with limit modules)
- AMS 2750 E compliant: Analog input process values. Tip: Maximize field calibration accuracy and uniformity by using advanced F4T features such as Calibration Offset and Linearization Function blocks; refer to user manual for details
- RoHS by design, China RoHS Level 2, W.E.E.E.
- CE
- Windows® Hardware Certification

Control Loops
- 1 to 4 PID or ON-OFF control loops
- 0 to 6 Limit loops
- User-selectable action: Heat, cool or heat/cool
- Auto-tune with TRU-TUNE+ adaptive control

Control Loops and Over-temperature Limits
- Input sampling: 10Hz
- Output update: 10Hz

Communications
- Modbus® TCP (Ethernet)
- Isolated communications

Profile Ramp and Soak Option
- Profile engine affects 1 to 4 loops in sync
- 40 profiles with 50 steps per profile

Data Logging
- User selectable parameters: Up to a maximum of 128 active parameters depending on configuration
- Logging interval: Programmable increments between 0.1 seconds and 60 minutes if logging to internal memory. Logging directly to USB; 1.0 seconds to 60 minutes
- File types: .CSV for standard data logging or proprietary format for encrypted data log option
- Storage: 80MB internal memory or to USB memory stick
- File transfer: Internal memory to USB host port or to Ethernet Modbus® TCP
- Transfer options: On demand by user or user programmable based on time (hours) or immediately when a new data log file record is available or percent of memory used. Utilizes TFTP and Sambo protocols
- Record: Date and time stamped

Batch Processing with Bar Code Data Entry Via USP Scanner
- Compatible with many bar code types including Code 128, Code 39, Extended Code 39, Data Matrix, Interleaved 2 of 5, ISSN, SISAC, LOGMARS, QR, UCC/EAN-128 (GS1-128, UPC-A & E)
- Compatible with most USB scanner types such as Zebra DS4308, DS2208, LI2208 and LS2208
- USB port provides 500mA max. power supply for bar code scanner/base charging
- Display can show bar code fields up to a maximum length of 48 characters. Characters might wrap to 2 rows after 24 characters
- Part-Profile list entries – approximately 1,000 typical length part numbers of 15 characters each can be stored. Can easily import different part files via USB thumb drive connection to cover a higher quantity range of part lists
- Program the bar code scanner to add an enter key (carriage return feed) at the end of each bar code data field sent to F4T/D4T™; Refer to USB scanner user manual

Trending
- 4 user programmable charts
- 6 pens available per chart
- View analog sensors, process values, set points and power

Real Time Clock with Battery Backup
- Accuracy (typical): +/-3ppm over -15 to 50°C
- Typical battery life: 10 years at 77°F (25°C)
- Field replaceable lithium battery

Number of Function Blocks by Ordering Option

Function Block	Basic	Set 1	Set 2
Alarm	6	8	14
Compare	None	4	16
Counter	None	4	16
Linearization	4	4	8
Logic	None	12	24
Math	None	12	24
Process Value	4	4	8
Special Output Function (including compressor)	None	2	4
Timer	None	6	16
Variable	4	12	24

Compare
- Greater than, less than, equal, not equal, greater than or equal, less than or equal

Counters
- Counts up or down, loads predetermined value on load signal

F4T

Linearization
- Interpolated or stepped

Logic
- And, nand, or, nor, equal, not equal, latch, flip-flop

Math
- Average, process scale, switch over, deviation scale, differential (subtract), ratio (divide), add, multiply, absolute difference, minimum, maximum, square root, sample and hold, pressure-to-altitude and dew point

Process Value
- Sensor backup, average, crossover, wet bulb-dry bulb, switch over, differential (subtract), ratio (divide), add, multiply, absolute difference, minimum, maximum, square root, altitude, Vaisala® relative humidity and pressure-to-altitude

Special Output Function
- Compressor control (cool and/or dehumidify with single compressor), motorized valve, sequencer

Timers
- On pulse, delay, one shot or retentive

Variable
- User value for digital or analog variable

Panel Mount Dimensions

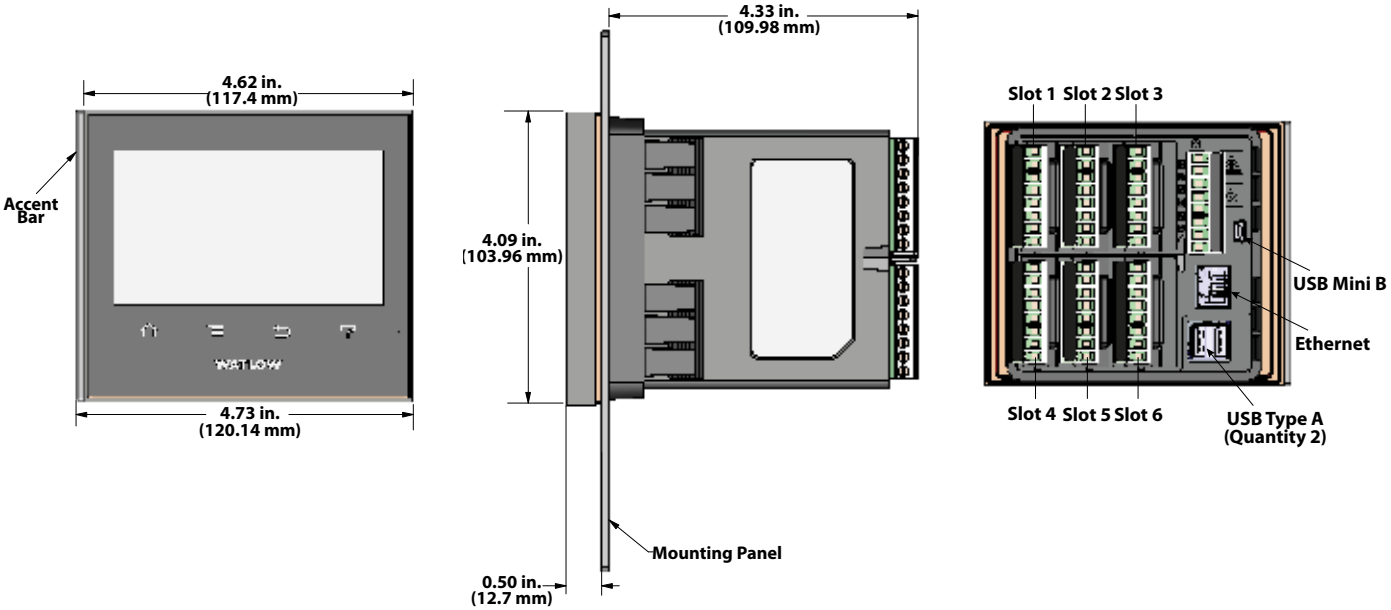

Flush Mount Dimensions

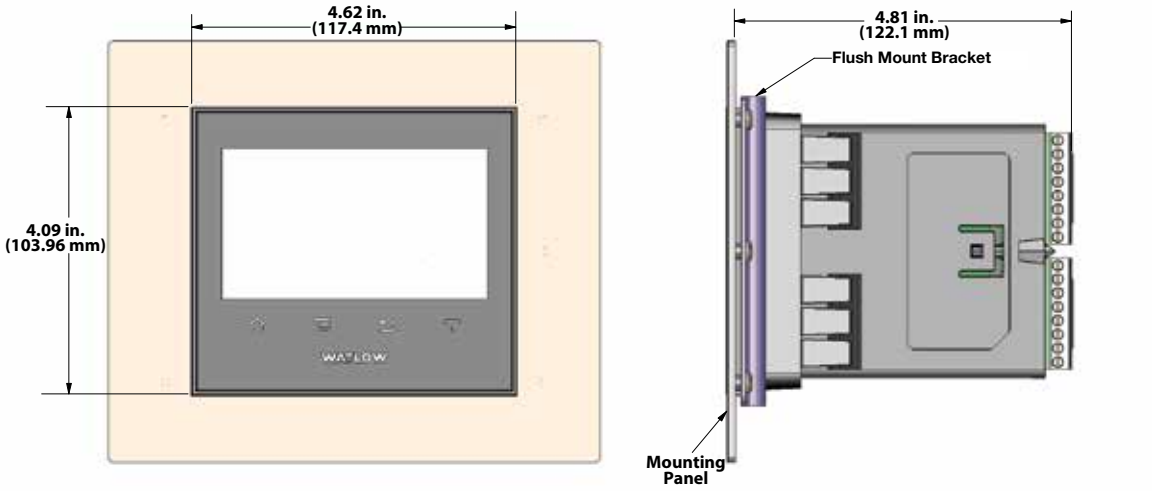

F4T

F4T Base Ordering Information

Base includes: 4.3 inch color graphical touch panel, 2 USB host, USB configuration port, standard bus, Ethernet Modbus® TCP. SCPI protocol and backwards compatible Modbus® for select key SERIES F4D/P/S parameters.

Part Number

①②	③ Base Type	④ Application Type	⑤ Data Logging	⑥ Power Supply Connector & Voltage, Logo	⑦ Profiles & Function Blocks	⑧⑨ Communication Options	⑩⑪ Documentation, Accent Bar, Replacement Connector & Custom	⑫ Control Algorithms
F4	T							

③	Base Type
T =	Touch screen

④	Application Type
1 =	Standard
X =	Custom options, contact factory

⑤	Data Logging and Graphic Trend Charts
A =	None
B =	Graphical trend chart
J =	Data logging
K =	Data logging with encrypted files
L =	Data logging and graphical trend chart
M =	Data logging with encrypted files, graphical trend charts and batch processing with bar code data entry①

①Must also order digit 7: Profiles option D, E or F for batch processing with bar code data entry feature to be enabled.

⑥	Power Supply Connector & Voltage, Logo		
	Power Supply	Power Supply Connector	Watlow Logo
1 =	100 to 240VAC	Right angle (standard)	Yes
2 =	100 to 240VAC	Right angle (standard)	No
3 =	100 to 240VAC	Front screw	Yes
4 =	100 to 240VAC	Front screw	No
5 =	24 to 28VAC or VDC	Right angle (standard)	Yes
6 =	24 to 28VAC or VDC	Right angle (standard)	No
7 =	24 to 28VAC or VDC	Front screw	Yes
8 =	24 to 28VAC or VDC	Front screw	No

⑦	Profiles & Function Blocks				
	Profiles		Function Blocks		
	None	40 Profiles, Battery Backup and Real-Time Clock	Basic Set	Set 1	Set 2
A =	X		X		
B =	X			X	
C =	X				X
D =		X	X		
E =		X		X	
F =		X			X

Note: Refer to page 9 "Number of Function Blocks by Ordering Option" for quantities and types of functions blocks in each set in the F4T specification sheet on the website.

⑧⑨	Communication Options
AA =	Modbus® TCP (Ethernet)
A3 =	EtherNet/IP™ (w/Modbus® TCP)

⑩⑪	Documentation, Accent Bar, Replacement Connector & Custom				
	Documentation DVD / QSG	Decorated Brushed Aluminum Accent Bar			
		Gray	Blue	Red	None
1A =	Yes	X			
1B =	Yes		X		
1C =	Yes			X	
1D =	Yes				X
1E =	No	X			
1F =	No		X		
1G =	No			X	
1H =	No				X
1J =	Replacement connectors only - for the model number entered				
XX =	Contact factory, other custom-firmware, preset parameters, locked code, logo				

⑫	Control Algorithms	
	Control Loop	Cascade Loop
1 =	1	0
2 =	2	0
3 =	3	0
4 =	4	0
5 =	0	0
6 =	0	1
7 =	1	1
8 =	2	1
9 =	3	1
A =	0	2
B =	1	2
C =	2	2

Note: Each control loop algorithm requires 1 universal or thermistor input from a flex module.
Note: Each cascade loop algorithm requires 2 universal or thermistor inputs from flex modules.

⑬⑭⑮	Populated Flex Modules
AAA =	No populated flex modules
XXX =	Contact factory - Populated flex modules

Note: If AAA is selected you will need to order Flex Modules (FM) next to account for input and output hardware.

F4T

Flex Modules—High Density I/O Specifications

4 Universal Inputs (Control Loops, Auxiliary Input)

- Thermocouple: Grounded or ungrounded sensors, greater than 20MΩ input impedance, 2kΩ source resistance max.
- RTD: 2-wire, platinum, 100Ω and 1000Ω at 32°F (0°C) calibration to DIN curve (0.00385Ω/Ω/°C)
- Process: 0-20mA at 100Ω, or 0-10VDC, 0-50mVDC at 20kΩ input impedance; scalable
- Potentiometer: 0 to 1,200Ω
- Inverse scaling

Four Thermistor Inputs (Control Loops, Auxiliary Input)

- 0 to 40kΩ, 0 to 20kΩ, 0 to 10kΩ, 0 to 5kΩ
- 2.252kΩ and 10kΩ base at 77°F (25°C)
- Preprogrammed Steinhart-Hart coefficients for Alpha Techniques (A curve 2.252k and 10k, C curve 10k), BetaTHERM (2.2K3A, 10K3A and 10K4A) and YSI (004, 016 and 006)
- User-settable Steinhart-Hart coefficients for other thermistors

Three Universal Process/Retransmit Outputs

- Output range selectable
- 0 to 10VDC ±15mV into a min. 4,000Ω load with 2.5mV nominal resolution
- 0 to 20mA ±30µA into max. 400Ω load with 5µA nominal resolution
- Temperature stability 100ppm/°C

Three Mechanical Relays

- 2 Form C relays, 1 Form A relay. Form A relay shares common with 1 Form C relay
- Each relay is 5A, 24 to 240VAC or 30VDC max., resistive load, 100,000 cycles at rated load. Requires a min. load of 20mA at 24V, 125VA pilot duty 120/240VAC, 25VA at 24VAC

Four Mechanical Relays

- Form A, 5A ea., 24 to 240VAC or 30VDC max., resistive load, 100,000 cycles at rated load. Requires a min. load of 20mA at 24V, 125VA pilot duty

Two Solid State Relays

- Form A, 10A max. each SSRs combined at 24VAC min., 264VAC max., opto-isolated, without contact suppression, max. resistive load 10A per output at 240VAC, max. 20A per card at 122°F (50°C), max.

Four Solid State Relays

- 2 pairs of SSRs, each pair shares a common
- Form A, 24VAC min., 264VAC max., opto-isolated, without contact suppression, resistive load 2A per output at 240VAC, max. See table for max. current per output

Quad 2A SSR Card Derating Curves

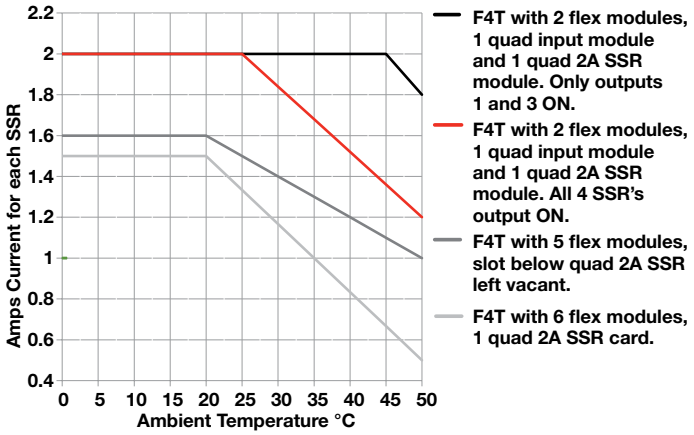

Six Digital I/O

- Each independently configurable as input or output
- Dry contact input: update rate 10Hz, min. open resistance 10kΩ, max. closed resistance 50Ω, max. short circuit 13mA
- DC voltage input: update rate 10Hz, max. input 36V at 3mA, min. high state 3V at 0.25mA, max. low state 2V
- Switched dc output: max. 5VDC at 130mA, or 19-22VDC at 80mA; field selectable
- Open collector output: 32VDC at 1.5A max., 8A max. per 6 outputs combined

F4T

F4T Flex Module—High Density I/O Ordering Information

Part Number

①②	③ Module ID Type	④ Future Option		⑤ Input and Output Hardware	⑥⑦⑧ Future Options		⑨ Future Option	⑩ Custom Options and Connectors	⑪⑫ Custom Options- Firmware, Overlay, Preset Parameters, Locked Code
FM	H	A	-		AAA	-	A		

③	Module ID Type
H =	High density I/O

④	Future Option
A =	Future option

⑤	Input and Output Hardware
R =	4 universal inputs (T/C, RTD 2-wire, 0-10VDC, 0-20mA)
P =	4 thermistor inputs
C =	6 digital I/O
F =	3 universal process/retransmit outputs
B =	3 mechanical relay 5A, 2 Form C and 1 Form A (Form A shares a common with one Form C)
J =	4 mechanical relay 5A, Form A
K =	2 SSRs 10A①
L =	4 SSRs at 2A each. SSRs grouped in 2 pairs with each pair sharing a common

① **Notes:** Input and Output hardware option K: 2 SSR's 10A.

The 2 SSR's 10A FM module requires 2 F4T slots. Valid slot locations are 1, 2, 4 or 5.

The F4T can support a maximum of 2 total of the K option FM module types (4 total SSR, 10A).

⑥⑦⑧	Future Options
AAA =	Future options

⑨	Future Option
A =	Future option

⑩	Custom Options and Connectors
A =	Right angle screw connector (standard)
F =	Front screw connector

⑪⑫	Custom Options - Firmware, Overlay, Preset Parameters, Locked Code
AA =	Standard with quick start guide
AB =	Standard without quick start guide
AC =	Replacement connectors hardware only - for the entered model number
XX =	Custom

F4T

Flex Modules—Mixed and Limit I/O Specifications

Universal Input

- Thermocouple: Grounded or ungrounded sensors, greater than 20MΩ input impedance, 2kΩ source resistance max.
- RTD: 2- or 3-wire, platinum, 100Ω and 1000Ω at 32°F (0°C) calibration to DIN curve (0.00385Ω/Ω/°C)
- Process: 0-20mA at 100Ω, or 0-10VDC, 0-50mVDC at 20kΩ input impedance; scalable
- Potentiometer: 0 to 1,200Ω
- Inverse scaling

Thermistor Input

- 0 to 40kΩ, 0 to 20kΩ, 0 to 10kΩ, 0 to 5kΩ
- 2.252kΩ and 10kΩ base at 77°F (25°C)
- Preprogrammed Steinhart-Hart coefficients for Alpha Techniques (A curve 2.252k and 10k, C curve 10k), BetaTHERM (2.2K3A, 10K3A and 10K4A) and YSI (004, 016 and 006)
- User-settable Steinhart-Hart coefficients for other thermistors

Temperature Input

- Thermocouple: Grounded or ungrounded sensors, greater than 20MΩ input impedance, 2kΩ source resistance max.
- RTD: 2-wire, platinum, 100Ω and 1000Ω at 32°F (0°C) calibration to DIN curve (0.00385Ω/Ω/°C)

Digital Input

- Update rate 10Hz
- DC voltage: Max. input 36V at 3mA, min. high state 3V at 0.25mA, max. low state 2V
- Dry contact input: Min. open resistance 10kΩ, max. closed resistance 50Ω, max. short circuit 13mA

Current Transformer Input

- Accepts 0-50mA signal (user programmable range)
- Displayed operating range and resolution can be scaled and are user programmable
- Current input range: 0 to 50mA ac, 100Ω input impedance
- Response time: 1 second max., accuracy ±1mA typical
- Use with current transformer (Watlow part number: 16-0246)

Switched DC Output

- Max. 32VDC open circuit
- Max. current 30mA per single output
- Max. current 40mA per pair

Open Collector Output

- Max. 30VDC at 100mA

Solid State Relay (SSR) Output

- Form A, 1A at 50°F (10°C) to 0.5A at 149°F (65°C), 0.5A at 24VAC min., 264VAC max., opto-isolated, without contact suppression

Form A Electromechanical Relay Output

- 5A, 24 to 240VAC or 30VDC max., resistive load, 100,000 cycles at rated load, requires a min. load of 20mA at 24V, 125VA pilot duty

Form C Electromechanical Relay Output

- 5A, 24 to 240VAC or 30VDC max., resistive load, 100,000 cycles at rated load, requires a min. load of 20mA at 24V, 125VA pilot duty

NO-ARC Relay Output

- Form A, 12A at 122°F (50°C), 85 to 264VAC, no VDC, resistive load, 2 million cycles at rated load

Universal Process/Retransmit Output

- Range selectable
- 0 to 10VDC ±15mV into a min. 1,000Ω load with 2.5mV nominal resolution
- 0 to 20mA ±30µA into max. 800Ω load with 5µA nominal resolution
- Temperature stability 100ppm/°C

F4T

F4T Flex Module—Mixed I/O Ordering Information

Part Number

① ②	③ Module ID Type	④ Future Option	⑤ Input Hardware	⑥ ⑦ Output Hardware Options	⑧ Future Option	⑨ Future Option	⑩ Custom Options and Connectors	⑪ ⑫ Custom Options- Firmware, Overlay, Preset Parameters, Locked Code
FM	M	A	-		A	- A		

③ Module ID Type	
M =	Mixed I/O

④ Future Option	
A =	Future option

⑤ Input Hardware	
A =	None
U =	Universal input - T/C, RTD 2- or 3-wire, 0-10VDC, 0-20mA
T =	Thermistor input
C* =	Current transformer input
***Note:** If option C is ordered than the following options are NOT valid for Outputs 1 & 2: FA, FC, FJ and FK.	

⑥ ⑦ Output Hardware Options		
	Output 1	**Output 2**
AA =	None	None
AJ =	None	Mechanical relay 5A, Form A
AK =	None	SSR Form A, 0.5A
CA =	Switched dc/open collector	None
CH =	Switched dc/open collector	NO-ARC 12A power control
CC =	Switched dc/open collector	Switched dc
CJ =	Switched dc/open collector	Mechanical relay 5A, Form A
CK =	Switched dc/open collector	SSR Form A, 0.5A
EA =	Mechanical relay 5A, Form C	None
EH =	Mechanical relay 5A, Form C	NO-ARC 12A power control
EC =	Mechanical relay 5A, Form C	Switched dc
EJ =	Mechanical relay 5A, Form C	Mechanical relay 5A, Form A
EK =	Mechanical relay 5A, Form C	SSR Form A, 0.5A
FA =	Universal process/retransmit	None
FC =	Universal process/retransmit	Switched dc
FJ =	Universal process/retransmit	Mechanical relay 5A, Form A
FK =	Universal process/retransmit	SSR Form A, 0.5A
KH =	SSR Form A, 0.5A	NO-ARC 12A power control
KK =	SSR Form A, 0.5A	SSR Form A, 0.5A

⑧ Future Option	
A =	Future option

⑨ Future Option	
A =	Future option

⑩ Custom Options and Connectors	
A =	Right angle screw connector (standard)
F =	Front screw connector

⑪ ⑫ Custom Options - Firmware, Overlay, Preset Parameters, Locked Code	
AA =	Standard with quick start guide
AB =	Standard without quick start guide
AC =	Replacement connectors hardware only - for the entered model number
XX =	Custom

F4T

F4T Flex Module—Limit Ordering Information

Part Number

①②	③ Module ID Type	④ Future Option		⑤⑥⑦ Input and Output Hardware	⑧ Future Option		⑨ Future Option	⑩ Custom Options and Connectors	⑪⑫ Custom Options- Firmware, Overlay, Preset Parameters, Locked Code
FM	L	A	-		A	-	A		

③	Module ID Type
L =	Limit

④	Future Option
A =	Future option

⑤⑥⑦	Functions	Auxiliary Output Hardware	Limit Output Hardware	Auxiliary Input Hardware
LCJ =	Limit control with universal input	Switched dc/ open collector	Mechanical relay 5A, Form A	None
LEJ =	Limit control with universal input	Mechanical relay 5A, Form C	Mechanical relay 5A, Form A	None
LAJ =	Limit control with universal input	None	Mechanical relay 5A, Form A	None
MCJ=	Limit control with thermistor input	Switched dc/ open collector	Mechanical relay 5A, Form A	None
MEJ =	Limit control with thermistor input	Mechanical relay 5A, Form C	Mechanical relay 5A, Form A	None
MAJ =	Limit control with thermistor input	None	Mechanical relay 5A, Form A	None
YEB =	Limit control with temperature input	None	Mechanical relay 5A, Form C	Single digital input (limit reset)

Notes: Universal input = T/C, RTD 2- or 3-wire, 0-10VDC, 0-20mA
Temperature input = T/C and RTD 2-wire only

⑧	Future Option
A =	Future option

⑨	Future Option
A =	Future option

⑩	Custom Options and Connectors
A =	Right angle screw connector (standard)
F =	Front screw connector

⑪⑫	Custom Options - Firmware, Overlay, Preset Parameters, Locked Code
AA =	Standard with quick start guide
AB =	Standard without quick start guide
AC =	Replacement connectors hardware only - for the entered model number
XX =	Custom

F4T

F4T Flex Modules—Communication Ordering Information

Part Number

①②	③ Module ID Type	④ Future Option		⑤ Comm. Option	⑥⑦⑧ Future Options		⑨ Future Option	⑩ Custom Options and Connectors	⑪⑫ Custom Options- Firmware, Overlay, Preset Parameters, Locked Code
FM	C	A	-	2	AAA	-	A		

③ Module ID Type	
C =	Communications

④ Future Option	
A =	Future option

⑤ Communications Option	
2 =	Modbus® RTU 232/485
Note: EIA-232/485 Modbus® RTU flex module, if used, must occupy F4T slot 6 location.	

⑥⑦⑧ Future Options	
AAA =	Future options

⑨ Future Option	
A =	Future option

⑩ Custom Options and Connectors	
A =	Right angle screw connector (standard)
F =	Front screw connector

⑪⑫ Custom Options - Firmware, Overlay, Preset Parameters, Locked Code	
AA =	Standard with quick start guide
AB =	Standard without quick start guide
AC =	Replacement connectors hardware only - for the entered model number
XX =	Custom

Accessories

Part Number	Description
0830-0870-0000	Protective screen cover (2 per pack)
0822-0705-0000	F4T 1/4 DIN mounting collar - thru front panel mount
0216-1285-0000	Flushmount - mounting adapter plate
0847-0400-0000	USB 2.0 to RJ45 Ethernet adapter
0238-1245-ALUM	Accent bar (brushed aluminum gray)
0238-1245-REDD	Accent bar (brushed aluminum red)
0238-1245-BLUE	Accent bar (brushed aluminum blue)
16-0246	Current transformer
0804-0147-0000	RC suppression - Quencharc®
0601-0001-0000	Controller support tools (DVD)
0830-0808-0001 (CAPUSB-MB5)	Rubber plug USB mini
0830-0808-0002 (CAPUSB-A)	Rubber plug USB host
0830-0858-0000	Replacement battery
0822-0769-0000	Module slot plug (for vacant F4T slots without flex modules)

Recommended Third-Party Components

Mfg.	Mfg. Part Number	Description	Web Site
Amphenol	**USBF 21N SCC**	USB - A receptacle with self closing cap	www.alliedelec.com
Amphenol	**USBBF 21N SCC**	USB - B receptacle with self closing cap	www.alliedelec.com
Amphenol	**RJF 21N SCC**	RJ45 receptacle with self closing cap	www.alliedelec.com
Molex	**847290006**	USB type A panel mount with 2 m cord	www.alliedelec.com
Molex	**84700-0003**	Dust cover	www.alliedelec.com

Documentation

1720-6742	Installation and Troubleshooting User's Guide
1680-2414	Setup and Operations User Guide
1440-3329	F4T Controller Quick Start Guide
0600-0095-0000	Communications Flex Modules Quick Start Guide
0600-0096-0000	High Density Flex Modules Quick Start Guide
0600-0097-0000	Mixed I/O Flex Modules Quick Start Guide

EZ-ZONE® RM

The EZ-ZONE® RM controller simplifies thermal system management. The EZ-ZONE RM controller family is comprised of six module types: an integrated on-off or PID control, monitoring and over/under temperature limit module, a high-density on-off or PID control module, a high-density limit only module, an input/output (I/O) expansion module, a high-density monitor/scanner module and a data logging and field communications access module. A system is configured by connecting any combination of module types to address specific application needs. The EZ-ZONE RM is extremely flexible and scalable allowing mixing and matching of I/O to configure one to 152 control loops and up to 256 monitor points.

Now Watlow's EZ-ZONE RM is available through Watlow ***SELECT***®, a program that enables you to quickly identify, configure and receive your thermal products faster and easier than ever before. Visit www.watlow.com/select to learn more.

Optional integrated controller functions can be combined or ordered in different quantities:

- PID control loops
- Over/under temperature limit control loops
- 10 and 15 ampere power output/heater driver options
- On-board data logging
- Current measurement input
- Sequencer start up and control function
- Programmable timer and counter functions
- Programmable math and logic options
- Multiple communication protocol options
- Mobile configuration with removable secure digital (SD) flash card

Benefits of using an integrated controller solution:

- Reduces wiring time and termination complexity compared with connecting multiple discrete products
- Improves system reliability
- Reduces termination and installation cost
- Eliminates compatibility issues often encountered with using various discrete components and brands
- Reduces troubleshooting time and downtime costs because the system can specifically identify any problems with a sensor, controller, solid state relay (SSR) power output or heater load
- Complete thermal solution saves engineering time and labor costs while shortening project schedules



Features and Benefits

Multiple inputs; from one to 152 PID loops of control or monitor up to 256 analog inputs

- Mix and match I/O to fit any application; from one input with two outputs to 152 analog inputs with 152 outputs, or monitor up to as many as 256 analog inputs all in one system
- Reduces cost because only required loops are purchased
- Allows a common controller platform across many design applications as both loops and outputs can be ordered in single increments

Advanced PID control algorithm

- Offers TRU-TUNE®+ adaptive control to provide tighter control for demanding applications
- Enables auto-tune for fast, efficient start-up

Communication capabilities

- Provides a range of protocol options including universal serial bus (USB) device port, Modbus® RTU, EtherNet/IP™, Modbus® TCP, DeviceNet™ and PROFIBUS

USB port

- Provides data log retrieval

SPLIT-RAIL control

- Allows modules mounted in separate high-voltage and low-voltage cabinets to function as an integrated system
- Minimizes the length and cost of wire runs and improves system reliability by locating inputs closer to sensors and outputs closer to loads

AUTO CLONE

- Reduces time and configuration complexity by automatically building a new module with the same parameter settings as the replaced module

SENSOR GUARD

- Prevents unplanned process shutdowns and product loss by switching to a backup sensor if the primary sensor fails

EZ-ZONE RM

Additional Key Functions

- Configuration communication port (standard bus)
- Removable modules and connectors
- Ring lug and front-screw terminal options
- Profile ramp soak with 400 total steps
- Retransmit and remote set point input virtually inside controller eliminating costs for input/output hardware
- User configuration settings can be stored and recalled
- Thermistor input
- Elevated operating range of 0 to 149°F (-18 to 65°C)
- UL® listed, CSA, CE, RoHS, W.E.E.E., FM, SEMI F47-0200, Class 1, Div. 2 rating on selected models

Common Specifications (Applies to all models)

Line Voltage/Power

- 20.4 to 30.8VAC/VDC, 50/60Hz ±5%
- Any external power supply used should comply with a Class 2 or SELV rating (see specific module specification listing for max. VA power consumption)
- Data retention upon power failure via non-volatile memory
- Compliant with Semi F47-0200, Figure R1-1 voltage sag requirements

Environment

- 0 to 149°F (-18 to 65°C) operating temperature
- -40 to 185°F (-40 to 85°C) storage temperature
- 0 to 90% RH, non-condensing

Functional Operating Range for RMC, RMH, RML and RMS

Type J: -346 to 2192°F (-210 to 1200°C)
Type K: -454 to 2500°F (-270 to 1371°C)
Type T: -454 to 750°F (-270 to 400°C)
Type E: -454 to 1832°F (-270 to 1000°C)
Type N: -454 to 2372°F (-270 to 1300°C)
Type C: 32 to 4200°F (0 to 2315°C)
Type D: 32 to 4200°F (0 to 2315°C)
Type F: 32 to 2449°F (0 to 1343°C)
Type R: -58 to 3214°F (-50 to 1767°C)
Type S: -58 to 3214°F (-50 to 1767°C)
Type B: 32 to 3300°F (0 to 1816°C)
RTD (DIN): -328 to 1472°F (-200 to 800°C)
Process: -1999 to 9999 units

Agency Approvals

- UL®/EN 61010 Listed, File E185611, C-UL® C22.2 #61010ANSI/ISA 12.12.01-2007 Class 1, Div. 2 - Group A, B, C, D temperature code T4 (optional)
- UL® 1604 Class 1, Div. 2 (optional)
- EN 60529 IP20
- UL® 50, NEMA 4X, EN 60529 IP66; 1/16 DIN remote user interface (RUI)
- CSA 610110 CE
- RoHS by design, W.E.E.E.
- FM Class 3545 on limit control versions
- CE

Serial Communications

- All modules ship with standard bus protocol for configuration and communication with all other EZ-ZONE products

Implicit Messaging

Number of data members accessible through implicit messaging

Protocol	RM System	RMC	RMH	RML	RME	RMS	RMA
EtherNet/IP™	100	20	40	40	20	40	20
DeviceNet™	200	20	40	40	20	40	20

User Interface

- 7-segment LED, address/protocol indicator programmed via push button switch
- Communication activity, 2 LEDs
- Error condition of each loop, 4 LEDs
- Output status indication, 16 LEDs

Maximum System Configuration

- 1 access module plus up to 16 additional control or expansion modules (any combination), up to 152 loops

Mounting

- DIN-rail specification EN50022, 1.38 x 0.30 in. (35 x 7.5 mm)
- DIN-rail mounted or chassis mounted with customer supplied screws

Wiring Termination—Touch-Safe Terminals

- Right angle and front screw type terminal blocks (slots A, B, D, E)
- Input, power and controller output terminals, touch safe, removable, 12 to 30 AWG

EZ-ZONE RM

Programmable Application Blocks

Compare
- Greater than, less than, equal, not equal, greater than or equal, less than or equal

Counters
- Counts up or down, loads predetermined value on the load signal. Output is active when the count value equals or exceeds predetermined target value

Linearization
- Interpolated or stepped relationship

Logic
- And, nand, or, nor, equal, not equal, latch, flip flop

Math
- Average, process scale, deviation scale, differential (subtraction), ratio (divide), add, multiply, absolute difference, min., max., square root, sample and hold, altitude and dew point

Process Value
- Sensor backup, average, crossover, wet/dry bulb, switch over, differential (subtraction), ratio (divide), add, multiply, absolute difference, min., max., square root, altitude, visala and dew point

Special Output Function
- Compressor – turns on-off compressor for 1 or 2 loops (cool and dehumidify with single compressor)
- Motorized valve – turns on-off motor open/closed outputs causing valve to represent desired power level
- Sequencer – turns on-off up to 4 outputs to distribute a single power across all outputs with linear and progressive load wearing

Timers
- On pulse – produces an output of fixed time on the active edge of timer run signal
- Delay – output is a delayed start of timer run and off at same time
- 1 shot – oven timer
- Retentive – measures timer run signal and output on when accumulated time exceeds target

Variable
- User value for digital or analog variable

EZ-ZONE RM Family Comparison

	Control Module	High-Density Control Module	High-Density Limit Module	Expansion Module	High-Density Scanner Module
Number of modules per system	1 to 16	1 to 16	1 to 16	1 to 16	1 to 16
Number of PID loops per module	1 to 4	4, 8, 12 or 16	0	0	0
Number of limit loops per module	1 to 4	0	4, 8 or 12	0	0
Number of monitoring points per module	1 to 3	0	0	0	4, 8, 12 or 16
Mechanical relays per module	1 to 8	4 or 8	4, 6 or 8	4, 8 or 12	4 or 8
Digital I/O points per module	6	6 or 12	6 or 7	6, 12, 18 or 24	6, 7 or 12
Actions (events) per module	8	24	16	8	16
Alarms per module	8	24	16	8	16
Compare per module	4	24	16	8	24
Counters per module	4	24	16	8	24
Linearization per module	4	24	16	8	24
Logic per module	16	24	16	16	24
Math per module	8	24	16	8	24
Process value per module	1 to 4	4, 8, 12 or 16	4, 8 or 12	0	4, 8, 12 or 16
Special output function per module	4	0	0	4	0
Timers per module	4	24	16	8	24
Variable per module	16	24	16	16	24

EZ-ZONE RM

Dimensional Drawings

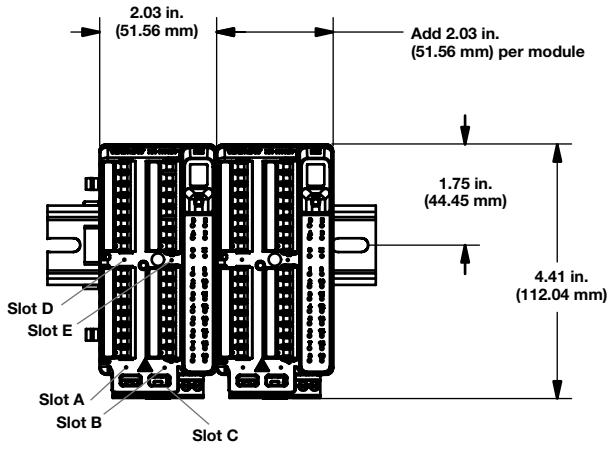

Connector Type	Module Depth in. (mm)
Standard (Right Angle)	5.8 (148)
Straight (Front Screw)	6.1 (155)
Ring Terminal	6.5 (166)

Standard Connectors

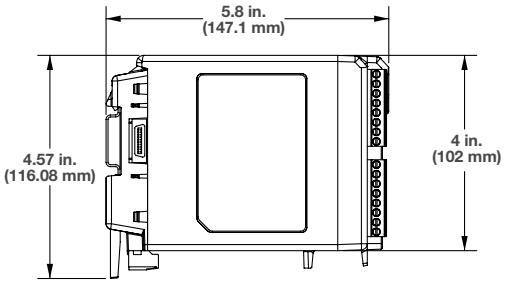

Front-Screw Connectors

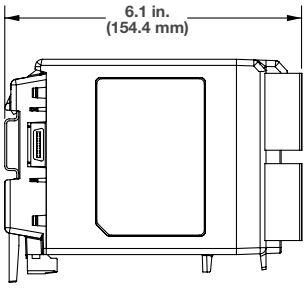

Ring Terminal Connectors

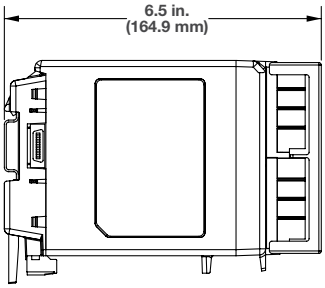

EZ-ZONE RM

Control Module Specifications (RMC)

(Select an RMC module for 1 to 4 loops of control.)

Line Voltage/Power

- Power consumption: 7 W, 14VA
- Any external power supply used should comply with a Class 2 or SELV rating

Controller

- User-selectable heat/cool, on-off, P, PI, PD, PID or alarm action, not valid for limit controllers

Process PID or Over-temperature Limit Mode Options

- Auto-tune with TRU-TUNE+ adaptive control
- Control sampling rates: Input = 10Hz, output = 10Hz (non-divisional)

Isolated Serial Communications

- All modules ship with standard bus protocol for configuration and communication with all other EZ-ZONE controllers
- Optional EIA-485, Modbus® RTU

Profile Ramp and Soak (RMC only, not available with high-density controller)

- Profile engine affects 1 to 4 loops
- 25 profiles and 15 sub-routines, 400 steps total
- Option for battery backup and real time clock is via the access module

Calibration Accuracy

- ±0.1% of span, ±1°C; see user manual for details

Universal Input

- Thermocouple, grounded or ungrounded sensors
- >20MΩ input impedance
- Max. of 2kΩ source resistance
- RTD 2- or 3-wire, platinum, 100Ω and 1000Ω @ 32°F (0°C) calibration to DIN curve (0.00385Ω/Ω/°C)
- Process, 0-20mA @100Ω, or 0-10VDC @ 20kΩ input impedance; scalable, 0-50mV
- Potentiometer: 0 to 1,200Ω
- Inverse scaling
- Current: Input range is 0 to 50mA, 100Ω input impedance
  Response time: 1 second max., accuracy ±1mA typical

Thermistor Input

- 0 to 40kΩ, 0 to 20kΩ, 0 to 10kΩ, 0 to 5kΩ
- 2.252kΩ and 10kΩ base at 77°F (25°C)

Digital Input

- Update rate 10Hz
- Max. input 36VDC at 3mA
- Min. high state 3VDC at 0.25mA
- Max. low state 2V

Dry Contact Input

- Update rate 10Hz
- Min. open resistance 10kΩ, max. closed resistance 50Ω

Current Measurement Input

- Accepts 0-50mA signal (user programmable range)
- Displayed operating range and resolution can be scaled and are user programmable

Output Hardware

- Switched dc:
  - Max. 32VDC open circuit
  - Max. current 30mA per single output
  - Max. current 40mA per paired outputs (1 & 2, 3 & 4, 5 & 6, 7 & 8)
- Open collector:
  - Max. 30VDC @ 100mA
- 6 digital inputs/outputs:
  - Switched dc, max. 20VDC @ 40mA, 12VDC @ 80mA
  - Open collector, max. 32VDC @ 1.5A, max. 8A per 6 outputs combined
- SSR, Form A, 1A at 50°F (10°C) to 0.5A at 149°F (65°C), 0.5A @ 24VAC min., 264VAC max., opto-isolated, without contact suppression
- Electromechanical relay, Form C, 5A, 24 to 240VAC or 30VDC max., resistive load, 100,000 cycles at rated load, requires a min. load of 20mA at 24V, 125VA pilot duty
- Electromechanical relay, Form A, 5A, 24 to 240VAC or 30VDC max., resistive load, 100,000 cycles at rated load, requires a min. load of 20mA at 24V, 125VA pilot duty
- NO-ARC relay, Form A, 15A @ 122°F (50°C), 85 to 264VAC, no VDC, resistive load, 2 million cycles at rated load
- Universal process/retransmit, output range selectable:
  - 0 to 10VDC ±15mV into a min. 1,000Ω load with 2.5mV nominal resolution
  - 0 to 20mA ±30µA into max. 800Ω load with 5µA nominal resolution
  - Temperature stability is 100ppm/°C

EZ-ZONE RM

Control Module Ordering Information

Requires 24 to 28VDC power supply, includes communication port for configuration with EZ-ZONE configurator and PC.

Part Number

① ② EZ-ZONE Rail Mount	③ Control Module	④ Input 1 Primary Function	⑤ Output 1 and 2 Hardware Options	⑥ Input 2	⑦ Output 3 and 4 Hardware Options	⑧ Input 3	⑨ Output 5 and 6 Hardware Options	⑩ Input 4	⑪ Output 7 and 8 Hardware Options	⑫ Connector Style/ Custom Product	⑬ Enhanced Options	⑭ Additional Options
RM	C											

④	Input 1 Primary Function
1 =	Control with universal input
2 =	Control with thermistor input
3 =	Ramp/Soak control with universal input **(R/S applies to all loops in module)**
4 =	Ramp/Soak control with thermistor input **(R/S applies to all loops in module)**
5 =	Limit with universal input **(only valid Output 1 and 2, options will be B, F, L)**
6 =	Limit with thermistor input **(only valid Output 1 and 2, options will be B, F, L)**
7 =	Current transformer input **(not valid Output 1 and 2, options are A, B, N, P, R, S, T)**
9 =	Custom

⑤	Output 1 and 2 Hardware Options	
	Output 1	**Output 2**
A =	None	None
B =	None	Mechanical relay 5A, Form A
U =	Switched dc/open collector	None
D =	Switched dc/open collector	NO-ARC 15A power control
E =	Switched dc/open collector	Switched dc
F =	Switched dc/open collector	Mechanical relay 5A, Form A
G =	Switched dc/open collector	SSR Form A, 0.5A
H =	Mechanical relay 5A, Form C	None
J =	Mechanical relay 5A, Form C	NO-ARC 15A power control
K =	Mechanical relay 5A, Form C	Switched dc
L =	Mechanical relay 5A, Form C	Mechanical relay 5A, Form A
M =	Mechanical relay 5A, Form C	SSR Form A, 0.5A
N =	Universal process	None
P =	Universal process	Switched dc
R =	Universal process	Mechanical relay 5A, Form A
S =	Universal process	SSR Form A, 0.5A
T =	None	SSR Form A, 0.5A
Y =	SSR Form A, 0.5A	NO-ARC 15A power control
Z =	SSR Form A, 0.5A	SSR Form A, 0.5A

⑥	Input 2
A =	None
1 =	Control with universal input
2 =	Control with thermistor input
5 =	Limit with universal input **(only valid Output 3 and 4, options will be B, F ,L)**
6 =	Limit with thermistor input **(only valid Output 3 and 4, options will be B, F, L)**
7 =	Current transformer input **(not valid Output 3 and 4, options are N, P, R, S)**
R =	Auxiliary 2nd input (universal input)
P =	Auxiliary 2nd input (thermistor input)

⑦	Output 3 and 4 Hardware Options	
	Output 3	**Output 4**
A =	None	None
B =	None	Mechanical relay 5A, Form A
U =	Switched dc/open collector	None
D =	Switched dc/open collector	NO-ARC 15A power control
E =	Switched dc/open collector	Switched dc
F =	Switched dc/open collector	Mechanical relay 5A, Form A
G =	Switched dc/open collector	SSR Form A, 0.5A
H =	Mechanical relay 5A, Form C	None
J =	Mechanical relay 5A, Form C	NO-ARC 15A power control
K =	Mechanical relay 5A, Form C	Switched dc
L =	Mechanical relay 5A, Form C	Mechanical relay 5A, Form A
M =	Mechanical relay 5A, Form C	SSR Form A, 0.5A
N =	Universal process	None
P =	Universal process	Switched dc
R =	Universal process	Mechanical relay 5A, Form A
S =	Universal process	SSR Form A, 0.5A
T =	None	SSR Form A, 0.5A
Y =	SSR Form A, 0.5A	NO-ARC 15A power control
Z =	SSR Form A, 0.5A	SSR Form A, 0.5A

⑧	Input 3
A =	None
1 =	Control with universal input
2 =	Control with thermistor input
5 =	Limit with universal input **(only valid Output 5 and 6, options will be B, F, L)**
6 =	Limit with thermistor input **(only valid Output 5 and 6, options will be B, F, L)**
7 =	Current transformer input **(not valid Output 5 and 6, options are N, P, R, S)**
R =	Auxiliary 2nd input (universal input)
P =	Auxiliary 2nd input (thermistor input)

(Ordering information continued on next page.)

EZ-ZONE RM

Control Module Ordering Information *(Continued)*

Requires 24 to 28VDC power supply, includes communication port for configuration with EZ-ZONE configurator and PC.

Part Number

① ② EZ-ZONE Rail Mount	③ Control Module	④ Input 1 Primary Function	⑤ Output 1 and 2 Hardware Options	⑥ Input 2	⑦ Output 3 and 4 Hardware Options	⑧ Input 3	⑨ Output 5 and 6 Hardware Options	⑩ Input 4	⑪ Output 7 and 8 Hardware Options	⑫ Connector Style/ Custom Product	⑬ Enhanced Options	⑭ ⑮ Additional Options
RM	C											

⑨	Output 5 and 6 Hardware Options	
	Output 5	**Output 6**
A =	None	None
B =	None	Mechanical relay 5A, Form A
U =	Switched dc/open collector	None
D =	Switched dc/open collector	NO-ARC 15A power control
E =	Switched dc/open collector	Switched dc
F =	Switched dc/open collector	Mechanical relay 5A, Form A
G =	Switched dc/open collector	SSR Form A, 0.5A
H =	Mechanical relay 5A, Form C	None
J =	Mechanical relay 5A, Form C	NO-ARC 15A power control
K =	Mechanical relay 5A, Form C	Switched dc
L =	Mechanical relay 5A, Form C	Mechanical relay 5A, Form A
M =	Mechanical relay 5A, Form C	SSR Form A, 0.5A
N =	Universal process	None
P =	Universal process	Switched dc
R =	Universal process	Mechanical relay 5A, Form A
S =	Universal process	SSR Form A, 0.5A
T =	None	SSR Form A, 0.5A
Y =	SSR Form A, 0.5A	NO-ARC 15A power control
Z =	SSR Form A, 0.5A	SSR Form A, 0.5A

⑩	Input 4
A =	None
1 =	Control with universal input
2 =	Control with thermistor input
5 =	Limit with universal input **(only valid Output 7 and 8, options will be B, F ,L)**
6 =	Limit with thermistor input **(only valid Output 7 and 8, options will be B, F, L)**
7 =	Current transformer input **(not valid Output 7 and 8, options are N, P, R, S)**
R =	Auxiliary 2nd input (universal input)
P =	Auxiliary 2nd input (thermistor input)

⑪	Output 7 and 8 Hardware Options	
	Output 7	**Output 8**
A =	None	None
B =	None	Mechanical relay 5A, Form A
U =	Switched dc/open collector	None
D =	Switched dc/open collector	NO-ARC 15A power control
E =	Switched dc/open collector	Switched dc
F =	Switched dc/open collector	Mechanical relay 5A, Form A
G =	Switched dc/open collector	SSR Form A, 0.5A
H =	Mechanical relay 5A, Form C	None
J =	Mechanical relay 5A, Form C	NO-ARC 15A power control
K =	Mechanical relay 5A, Form C	Switched dc
L =	Mechanical relay 5A, Form C	Mechanical relay 5A, Form A
M =	Mechanical relay 5A, Form C	SSR Form A, 0.5A
N =	Universal process	None
P =	Universal process	Switched dc
R =	Universal process	Mechanical relay 5A, Form A
S =	Universal process	SSR Form A, 0.5A
T =	None	SSR Form A, 0.5A
Y =	SSR Form A, 0.5A	NO-ARC 15A power control
Z =	SSR Form A, 0.5A	SSR Form A, 0.5A
C =	6 digital inputs/outputs **(valid option only if Input 4 selection = A)**	

⑫	Connector Style/Custom Product
A =	Right angle screw connector (standard)
F =	Front screw connector (slots A, B, D and E only)
S =	Custom

⑬	Enhanced Options
A =	Standard bus
1 =	Standard bus and Modbus® RTU 485 (selectable via dipswitch)

⑭ ⑮	Additional Options
Firmware, overlays, parameter settings	
AA =	Standard
AB =	Replacement connectors hardware only for the entered part number; additional cost for the model can be disregarded as you are only ordering replacement connectors
12 =	Class 1, Div. 2 (not available with integrated limit controller or mechanical relay options)
XX =	Custom

EZ-ZONE RM

High-Density Control Module Specifications (RMH)

(Select an RMH module for 4 to 16 loops of control.)

Line Voltage/Power

- Power consumption: 7 W, 14VA
- Any external power supply used should comply with a Class 2 or SELV rating

Controller

- User-selectable heat/cool, on-off, P, PI, PD, PID or alarm action, not valid for limit controllers

Process PID Options

- Auto-tune with TRU-TUNE+ adaptive control
- Control sampling rates: Input = 10Hz, output = 10Hz (non-divisional)

Isolated Serial Communications

- All modules ship with standard bus protocol for configuration and communication with all other EZ-ZONE controllers
- Optional EIA-485, Modbus® RTU

Calibration Accuracy

- ±0.1% of span, ±1°C; see user manual for details

Universal Input

- Thermocouple, grounded or ungrounded sensors
- >20MΩ input impedance
- Max. of 2kΩ source resistance
- RTD 2-wire, platinum, 100Ω and 1000Ω @ 32°F (0°C) calibration to DIN curve (0.00385Ω/Ω/°C)
- Process, 0-20mA @100Ω, or 0-10VDC @ 20kΩ input impedance; scalable, 0-50mV

Thermistor Input

- 0 to 40kΩ, 0 to 20kΩ, 0 to 10kΩ, 0 to 5kΩ
- 2.252kΩ and 10kΩ base at 77°F (25°C)

Digital Input

- Update rate 10Hz
- Max. input 36VDC at 3mA
- Min. high state 3VDC at 0.25mA

Dry Contact Input

- Update rate 10Hz
- Min. open resistance 10kΩ, max. closed resistance 50Ω

Output Hardware

- 6 digital inputs/outputs:
  - Switched dc, max. 20VDC @ 40mA, 12VDC @ 80mA
  - Open collector, max. 32VDC @ 1.5A, max. 8A per 6 outputs combined
- Electromechanical relay, Form A, 5A, 24 to 240VAC or 30VDC max., resistive load, 100,000 cycles at rated load, requires a min. load of 20mA at 24V, 125VA pilot duty

Tri-Process (Three universal process/retransmit outputs)

- Output range selections: 0 to 10VDC into a min. 4KΩ load
- 0 to 20mA into max. 400Ω load

Quad SSR

- 4 SSRs at 2A each; SSRs are grouped in 2-pairs with each sharing a common, see table:

Ambient Temp.	Maximum Current Per Relay	
	1 Quad SSR Card	More than 1 Quad SSR Card
-18 to 20°C	2A	1.5A
20 to 65°C	1A	0.75A

EZ-ZONE RM

High-Density Control Module Ordering Information

Requires 24 to 28VAC/VDC power supply, includes communication port for configuration with EZ-ZONE configurator and PC.

Part Number

① ② EZ-ZONE Rail Mount	③ Control Module	④ Connector Style		⑤ Slot A	⑥ Slot B	⑦ Slot D	⑧ Slot E		⑨ Future Option	⑩ Enhanced Options	⑪ ⑫ Additional Options
RM	H		-					-	A		

④	Connector Style/Custom Product
A =	Right angle screw connector (standard)
F =	Front screw connector (slots A, B, D and E only)
S =	Custom

⑤	Slot A
1 =	4 universal inputs (T/C, RTD 2-wire, 0-10VDC, 0-20mA) with control loops
2 =	4 thermistor inputs with control loops
4 =	4 high accuracy thermocouple inputs with control loops (defaults to Type K)

⑥	Slot B
A =	None
1 =	4 universal inputs (T/C, RTD 2-wire, 0-10VDC, 0-20mA) with control loops
2 =	4 thermistor inputs with control loops
4 =	4 high accuracy thermocouple inputs with control loops (defaults to Type K)

⑦	Slot D
A =	None
1 =	4 universal inputs (T/C, RTD 2-wire, 0-10VDC, 0-20mA) with control loops
2 =	4 thermistor inputs with control loops
4 =	4 high accuracy thermocouple inputs with control loops (defaults to Type K)
C =	6 digital I/O
F =	3 universal process/retransmit outputs
J =	4 mechanical relay 5A, Form A
L =	4 SSRs at 2A each; SSRs grouped in 2-pairs with each pair sharing a common

⑧	Slot E
A =	None
1 =	4 universal inputs (T/C, RTD 2-wire, 0-10VDC, 0-20mA) with control loops
2 =	4 thermistor inputs with control loops
4 =	4 high accuracy thermocouple inputs with control loops (defaults to Type K)
C =	6 digital I/O
F =	3 universal process/retransmit outputs
J =	4 mechanical relay 5A, Form A
L =	4 SSRs at 2A each; SSRs grouped in 2-pairs with each pair sharing a common

⑩	Enhanced Options
A =	Standard bus
1 =	Standard bus and Modbus® RTU 485 (user-selectable)

⑪ ⑫	Additional Options
Firmware, Overlays, Parameter Settings	
AA =	Standard
AB =	Replacement connectors hardware only for the entered part number
XX =	Custom

EZ-ZONE RM

High-Density Limit Module Specifications (RML)

(Select an RML module for 4 to 12 safety limits.)

Line Voltage/Power

- Power consumption: 7 W, 14VA
- Any external power supply used should comply with a Class 2 or SELV rating

Isolated Serial Communications

- All modules ship with standard bus protocol for configuration and communication with all other EZ-ZONE controllers
- Optional EIA-485, Modbus® RTU

Calibration Accuracy

- ±0.1% of span, ±1°C; see user manual for details

Universal Input

- Thermocouple, grounded or ungrounded sensors
- >20MΩ input impedance
- Max. of 2kΩ source resistance
- RTD 2-wire, platinum, 100Ω and 1000Ω @ 32°F (0°C) calibration to DIN curve (0.00385Ω/Ω/°C)
- Process, 0-20mA @100Ω, or 0-10VDC @ 20kΩ input impedance; scalable, 0-50mV

Thermistor Input

- 0 to 40kΩ, 0 to 20kΩ, 0 to 10kΩ, 0 to 5kΩ
- 2.252kΩ and 10kΩ base at 77°F (25°C)

Digital Input

- Update rate 10Hz
- Max. input 36VDC at 3mA
- Min. high state 3VDC at 0.25mA

Dry Contact Input

- Update rate 10Hz
- Min. open resistance 10kΩ, max. closed resistance 50Ω

Output Hardware

- 6 digital inputs/outputs:
  - Switched dc, max. 20VDC @ 40mA, 12VDC @ 80mA
  - Open collector, max. 32VDC @ 1.5A, max. 8A per 6 outputs combined
- Electromechanical relay, Form A, 5A, 24 to 240VAC or 30VDC max., resistive load, 100,000 cycles at rated load, requires a min. load of 20mA at 24V, 125VA pilot duty

EZ-ZONE RM

High-Density Limit Module Ordering Information

Requires 24 to 28VAC/VDC power supply, includes communication port for configuration with EZ-ZONE configurator and PC.

Part Number

① ② EZ-ZONE Rail Mount	③ Limit Module	④ Connector Style		⑤ Slot A	⑥ Slot B	⑦ Slot D	⑧ Slot E		⑨ Future Option	⑩ Enhanced Options	⑪ ⑫ Additional Options
RM	L		-					-	A		

④	Connector Style/Custom Product
A =	Right angle screw connector (standard)
F =	Front screw connector (slots A, B, D and E only)
S =	Custom

⑤	Slot A
4 =	4 high accuracy thermocouple inputs with limits (defaults to Type K)
5 =	4 universal inputs (T/C, RTD 2-wire, 0-10VDC, 0-20mA) with limit control loops
6 =	4 thermistor inputs with limit control loops

⑥	Slot B
A =	None
4 =	4 high accuracy thermocouple inputs with limits (defaults to Type K)
5 =	4 universal inputs (T/C, RTD 2-wire, 0-10VDC, 0-20mA) with limit control loops
6 =	4 thermistor inputs with limit control loops

⑦	Slot D
A =	None
4 =	4 high accuracy thermocouple inputs with limits (defaults to Type K)
5 =	4 universal inputs (T/C, RTD 2-wire, 0-10VDC, 0-20mA) with limit control loops
6 =	4 thermistor inputs with limit control loops
J =	4 mechanical relay 5A, Form A
C =	6 digital I/O*

⑧	Slot E
J =	4 mechanical relay 5A, Form A
B =	1 digital input and 2 mechanical relays, 5A (1 Form A and 1 Form C)*

⑩	Enhanced Options
A =	Standard bus
1 =	Standard bus and Modbus® RTU 485* (user-selectable)

⑪ ⑫	Additional Options
Firmware, Overlays, Parameter Settings	
AA =	Standard
AB =	Replacement connectors hardware only for the entered part number
XX =	Custom

* Reset limits via digital input, EZ key on RUI or communications commands

EZ-ZONE RM

Expansion Module Specifications (RME)

(Select an RME module for additional inputs and outputs and higher amperage outputs.)

Line Voltage/Power

- Power consumption: 7 W, 14VA
- Any external power supply used should comply with a Class 2 or SELV rating

Serial Communications

- All modules ship with standard bus protocol for configuration and communication with all other EZ-ZONE products

Wiring Termination—Touch Safe Terminals

- Right angle and front-screw type terminal blocks (slots A, B, D, E)
  - Input, power and controller output terminals, touch safe, removable, 12 to 30 AWG
- Ring lug terminal blocks (slots A and D only)
  - Input, power and controller output terminals are touch safe and removable

Digital Input

- Update rate 10Hz
- Max. input 36VDC at 3mA
- Min. high state 3VDC at 0.25mA

Dry Contact

- Min. open resistance 100kΩ
- Max. closed resistance 50Ω

Output Hardware (6 digital inputs/outputs)

- Update rate 10Hz
- Switched dc
  - Output voltage 20VDC max.
  - Max. supply current source 40mA at 20VDC and 80mA at 12VDC
- Open collector
  - Switched voltage max. 32VDC
  - Max. switched current per output 2.5A
  - Max. switched current for all six outputs combined 10A

Dual Solid State Relay

- 2 SSR board options, Form A, 10A max. each SSRs combined @ 24VAC min., 264VAC max., opto-isolated, without contact suppression, max. resistive load 10A per output at 240VAC, max. 20A per card at 122°F (50°C), max. 12A per card at 149°F (65°C)

Four Mechanical Relay

- 4 electromechanical relays, Form A, 5A, 24 to 240VAC or 30VDC max., resistive load, 100,000 cycles at rated load. Requires a min. load of 20mA at 24V, 125VA pilot duty

Tri-Process (3 universal process/retransmit outputs)

- Output range selections: 0 to 10VDC into a min. 4KΩ load
- 0 to 20mA into max. 400Ω load

Quad SSR

- 4 SSRs at 2A each; SSRs are grouped in 2-pairs with each sharing a common, see table:

Ambient Temp.	Maximum Current Per Relay	
	1 Quad SSR Card	More than 1 Quad SSR Card
-18 to 20°C	2A	1.5A
20 to 65°C	1A	0.75A

EZ-ZONE RM

Expansion Module Ordering Information

Requires 24 to 28VDC power supply, includes communication port for configuration with EZ-ZONE configurator and PC.

Part Number

① ② EZ-ZONE Rail Mount	③ Expansion Module	④ Connector Style		⑤ Slot A	⑥ Slot B	⑦ Slot D	⑧ Slot E		⑨ Future Option	⑩ Enhanced Options	⑪ ⑫ Additional Options
RM	E		-					-	A		

④	Connector Style/Custom Product
A =	Right angle screw connector (standard)
F =	Front screw connector (slots A, B, D and E only)
R =	Ring lug connector **(if ordered then slots B and E must be =A)**
S =	Custom

⑤	Slot A
A =	None
C =	6 digital I/O
F =	3 universal process/retransmit outputs
J =	4 mechanical relay 5A, Form A
K =	2 SSRs, Form A, 10A max. each **(if ordered, then slot B must be = A)**
L =	4 SSRs at 2 each SSR's grouped in 2-pairs with each pair sharing a common
T =	Quad inputs for external current transformers; can do 1-phase system measurement for all hardware outputs ordered within the expansion module

⑥	Slot B
A =	None
C =	6 digital I/O
F =	3 universal process/retransmit outputs
J =	4 mechanical relay 5A, Form A
L =	4 SSRs at 2 each SSRs grouped in 2-pairs with each pair sharing a common
T =	Quad inputs for external current transformers; can do either 1-phase or 3-phase system measurement for all hardware outputs ordered within the expansion module

⑦	Slot D
A =	None
C =	6 digital I/O
F =	3 universal process/retransmit outputs
J =	4 mechanical relay 5A, Form A
K =	2 SSRs, Form A, 10A max. each **(if ordered, then slot E must be = A)**
L =	4 SSRs at 2 each SSRs grouped in 2-pairs with each pair sharing a common
T =	Quad inputs for external current transformers; can do either 1-phase or 3-phase system measurement for all hardware outputs ordered within the expansion module

⑧	Slot E
A =	None
C =	6 digital I/O
F =	3 universal process/retransmit outputs
L =	4 SSRs at 2 each SSR's grouped in 2-pairs with each pair sharing a common
T =	Quad inputs for external current transformers; can do either 1-phase or 3-phase system measurement for all hardware outputs ordered within the expansion module

⑩	Enhanced Options
A =	Standard bus
1 =	Standard bus and Modbus® RTU 485

⑪ ⑫	Additional Options
Firmware, Overlays, Parameter Settings	
AA =	Standard
AB =	Replacement connectors hardware only, for the entered part number. Additional cost for the model can be disregarded as you are only ordering replacement connectors.
12 =	Class 1, Div. 2 (not available with integrated limit controller or mechanical relay options)
XX =	Custom

EZ-ZONE RM

High-Density Scanner Module Specifications (RMS)

(Select an RMS module for 4 to 16 auxiliary analog inputs.)

Line Voltage/Power

- Power consumption: 7 W, 14VA
- Any external power supply used should comply with a Class 2 or SELV rating

Isolated Serial Communications

- All modules ship with standard bus protocol for configuration and communication with all EZ-ZONE controllers
- Optional EIA-485, Modbus® RTU

Calibration Accuracy

- ±0.1% of span, ±1°C. See user manual for details.

Universal Input

- Thermocouple, grounded or ungrounded sensors
- >20MΩ input impedance
- Max. of 2kΩ source resistance
- RTD 2-wire, platinum, 100Ω and 1000Ω @ 32°F (0°C) calibration to DIN curve (0.00385Ω/Ω/°C)
- Process, 0-20mA @100Ω, or 0-10VDC @ 20kΩ input impedance; scalable, 0-50mV

Thermistor Input

- 0 to 40kΩ, 0 to 20kΩ, 0 to 10kΩ, 0 to 5kΩ
- 2.252kΩ and 10kΩ base at 77°F (25°C)

Digital Input

- Update rate 10Hz
- Max. input 36VDC at 3mA
- Min. high state 3VDC at 0.25mA

Dry Contact Input

- Update rate 10Hz
- Min. open resistance 10kΩ, max. closed resistance 50Ω

Output Hardware

- 6 digital inputs/outputs:
  - Switched dc, max. 20VDC @ 40mA, 12VDC @ 80mA
  - Open collector, max. 32VDC @ 1.5A, max. 8A per 6 outputs combined
- Electromechanical relay, Form A, 5A, 24 to 240VAC or 30VDC max., resistive load, 100,000 cycles at rated load, requires a min. load of 20mA at 24V, 125VA pilot duty

EZ-ZONE RM

High-Density Scanner Module Ordering Information

Requires 24 to 28VAC/VDC power supply, includes communication port for configuration with EZ-ZONE configurator and PC.

Part Number

①② EZ-ZONE Rail Mount	③ Scanner Module	④ Connector Style		⑤ Slot A	⑥ Slot B	⑦ Slot D	⑧ Slot E		⑨ Future Option	⑩ Enhanced Options	⑪⑫ Additional Options
RM	S		-					-	A		

④	Connector Style/Custom Product
A =	Right angle screw connector (standard)
F =	Front screw connector (slots A, B, D and E only)
S =	Custom

⑤	Slot A
4 =	4 high accuracy thermocouple inputs (defaults to Type K)
R =	4 universal inputs (T/C, RTD 2-wire, 0-10VDC, 0-20mA) without control loops
P =	4 thermistor inputs without control loops

⑥	Slot B
A =	None
4 =	4 high accuracy thermocouple inputs (defaults to Type K)
R =	4 universal inputs (T/C, RTD 2-wire, 0-10VDC, 0-20mA) without control loops
P =	4 thermistor inputs without control loops

⑦	Slot D
A =	None
4 =	4 high accuracy thermocouple inputs (defaults to Type K)
R =	4 universal inputs (T/C, RTD 2-wire, 0-10VDC, 0-20mA) without control loops
P=	4 thermistor inputs without control loops
C =	6 digital I/O
F =	3 universal process/retransmit outputs
J =	4 mechanical relay 5A, Form A
L =	4 SSRs at 2A each; SSR's grouped in 2-pairs with each pair sharing a common

⑧	Slot E
A =	None
4 =	4 high accuracy thermocouple inputs (defaults to Type K)
R =	4 universal inputs (T/C, RTD 2-wire, 0-10VDC, 0-20mA) without control loops
P =	4 thermistor inputs without control loops
B =	1 digital input and 2 mechanical relays, 4A
C =	6 digital I/O
F =	3 universal process/retransmit outputs
J =	4 mechanical relay 5A, Form A
L =	4 SSRs at 2A each; SSR's grouped in 2-pairs with each pair sharing a common

⑩	Enhanced Options
A =	Standard bus
1 =	Standard bus and Modbus® RTU 485 (user-selectable)

⑪⑫	Additional Options
Firmware, Overlays, Parameter Settings	
AA =	Standard
AB =	Replacement connectors hardware only, for the entered part number
XX =	Custom

EZ-ZONE RM

Access Module Specifications (RMA)

(Select an RMA module for communication protocol options, data logging and automatic configuration backup.)

Line Voltage/Power

- Power consumption: 4 W, 9VA
- Any external power supply used should comply with a Class 2 or SELV rating

Isolated Serial Communications

- All modules ship with standard bus protocol for configuration and communication connection to all EZ-ZONE products

Additional Communication Options

- EIA-232/485, Modbus® RTU
- EtherNet/IP™, Modbus® TCP, 10 BASE-T/100 BASE-TX
- DeviceNet™
- PROFIBUS DP (future option, contact factory)
- USB, controller recognized as a device

Note: If an access module is present, all other modules must have Modbus® disabled in order to achieve communications with all of the modules.

USB

- USB 1.1 device only
- Mini USB connector type
- Recognized as a mass storage device

Real Time Clock with Battery Backup

- Accuracy (typical): +/- 30ppm at 77°F (25°C)
- +30/-100ppm overtemperature operating range
- Battery type and typical lifetime rating: 10 years at 77°F (25°C)
- Lithium battery used, recycle properly

Data Logging

- 200 points
- File storage on-board module
- Common separated value (CSV) file type
- Export files via removable SD micro memory card or USB communications port

Memory Card

- Removable SD micro card
- 2G SD memory card provided, also accepts other storage space amounts
- -4 to 185°F (-20 to 85°C) ambient rating, non-volatile memory
- Information access to configuration files and the ability to store module auto-configuration settings and datalog files if options have been ordered

Auto-configuration File Backup

- Limited memory can support up to four modules
- Limited memory is fixed on board
- Unlimited memory can support up to 16 modules
- Unlimited memory utilizes removable SD micro card option

Note: All module parameters are backed up in memory except for USER SET 1 and USER SET 2 parameter settings and address.

EZ-ZONE RM

Access Module Ordering Information

Requires 24 to 28VDC power supply, includes communication port for configuration with EZ-ZONE configurator and PC.

Part Number

① ② EZ-ZONE Rail Mount	③ Access Module	④ Connector Style		⑤ Future Options	⑥ Comms. Options	⑦ Ramp/ Soak Functions	⑧ System Config. & Data Logging Options		⑨ ⑩ Future Options	⑪ ⑫ Additional Options
RM	A		-	A				-	AA	

④	Connector Style
A =	Right angle screw connector (standard)
F =	Front screw connector (slots B and E only)
S =	Custom

⑥	Communication Options
A =	None
2 =	Modbus® RTU 232/485
3 =	EtherNet/IP™, Modbus®/TCP
5 =	DeviceNet™
6 =	PROFIBUS DP

⑦	Ramp and Soak Functions
A =	None
B =	Battery backup and real time clock for profile ramp and soak

⑧ System Configuration and Data Logging Options

Order Option	USB "Device" Communication	Limited Auto-Configuration File Backup for Up to 4 Modules	Unlimited Auto-Configuration File Backup for Up to 16 Modules	On-Board Data Logging	Mobile Data (4G SD Card)
A		✓			
B			✓		✓
Y	✓		✓		✓
D	✓		✓	✓	✓

USB Device Configuration: USB access to configuration files (and data log files if data logging option is ordered) stored via onboard SD memory card. PC access to product via standard bus protocol.

Auto-Configuration Backup: Limited fixed onboard memory can support backing up configuration files for a maximum of four modules. The unlimited option utilizes a SD memory card to enable configuration file backup for up to 16 modules. Feature can be used for cloning configuration files to multiple modules or for easy field replacement to limit downtime.

Data Logging: Data log files stored on 2G SD memory card. Data files can be exported via USB communication port transfer or removing SD card into external card reader. Watlow reserves the right to ship a larger memory amount at any point in time.

Mobile Data: Transfer configuration files (and data logging files if data logging option is ordered) via removable SD memory card.

⑪ ⑫	Additional Options
Firmware, Overlays, Parameter Settings	
AA =	Standard
AB =	Replacement connectors hardware only, for the entered part number. Additional cost for the model can be disregarded as you are only ordering replacement connectors.
12 =	Class 1, Div. 2 (not available with integrated limit controller or mechanical relay options)
XX =	Custom

Compatible Accessories

Basic Remote User Interface (RUI) EZKB



The EZ-ZONE Remote User Interface (RUI and communications gateway) can be utilized as a communication gateway device to save cost, space and wiring when digital communications is being used with two or more EZ-ZONE controllers. The EZ-ZONE RUI can also serve as a display for showing all parameter values for up to 16 EZ-ZONE controllers, again saving cost, space and wiring expenses.

EZ-ZONE RM

Specifications

(Select a RMA PLUS module for communication protocol options, data logging and system configuration)

Interoperable with:
- EZ-ZONE RM (C, E, H, L, S) version 9.0+ (high-speed Watbus)
- EZ-ZONE RM (A, C, E, H, L, S) (low-speed Watbus)
- EZ-ZONE PM, RUI, ST (low-speed Watbus)
- EZ-ZONE RM (F, G, UH, Z)
- POWERGLIDE®

Line Voltage/Power
- Power consumption: 4 W, 9VA
- Any external power supply used should comply with a Class 2 or SELV rating

Isolated Serial Communications
- All modules ship with standard bus protocol (Watbus) for configuration and communication connection to all EZ-ZONE products

Standard Communication
- Watbus over Ethernet (gateway to high-speed Watbus)
- Watbus over USB (gateway to high-speed Watbus)
- Watbus via Serial ('C' connector)
- Modbus® TCP

Additional Communication Options
- EIA 232/485, Modbus® RTU
- DeviceNet™ (future option)
- EtherNet/IP™ (future option)

USB
- USB 2.0 device
- Mini USB connector type
- Recognized as a composite device: Vendor specific and mass storage classes
- USB host (future option)

Real Time Clock with Battery Backup
- Accuracy (typical): +/- 30ppm at 77°F (25°C)
- +30/-100ppm overtemperature operating range
- Battery type and typical lifetime rating: 10 years at 77°F (25°C)
- Lithium battery used, recycle properly

Data Logging
- Maximum of 2000 valid records
- Maximum of 500 unique data points per Watbus bus and zone
- File storage on embedded micro SD memory
- Comma separated value (CSV) file type
- Access log files via USB device port

Memory Card
- Micro SDHC (4-32GB)
- 4GB class 4 SDHC on standard models (operating temperature: -25 to 85°C)
- 16GB class 10 SDHC on data log models (operating temperature: -40 to 85°C)
- -4 to 185°F (-20 to 85°C) ambient rating, non-volatile memory

Note: All module parameters are backed up in memory.

RMA PLUS Remote Access Module

Specifications

(Select a RMA PLUS module for communication protocol options, data logging and system configuration.)

Interoperable with:
- EZ-ZONE RM (C, E, H, L, S) version 9.0+ (high-speed Watbus)
- EZ-ZONE RM (A, C, E, H, L, S) (low-speed Watbus)
- EZ-ZONE PM, RUI, ST (low-speed Watbus)
- EZ-ZONE RM (F, G, UH, Z)
- POWERGLIDE

Line Voltage/Power
- Power consumption: 4 W, 9VA
- Any external power supply used should comply with a Class 2 or SELV rating

Isolated Serial Communications
- All modules ship with standard bus protocol (Watbus) for configuration and communication connection to all EZ-ZONE products

Standard Communication
- Watbus over Ethernet (gateway to high-speed Watbus)
- Watbus over USB (gateway to high-speed Watbus)
- Watbus via Serial ('C' connector)
- Modbus® TCP

Additional Communication Options
- EIA 232/485, Modbus® RTU
- DeviceNet™ (future option)
- EtherNet/IP™ (future option)

USB
- USB 2.0 device
- Mini USB connector type
- Recognized as a composite device: vendor specific and mass storage classes
- USB host (future option)

Real Time Clock with Battery Backup
- Accuracy (typical): +/- 30ppm at 77°F (25°C)
- +30/-100ppm overtemperature operating range
- Battery type and typical lifetime rating: 10 years at 77°F (25°C)
- Lithium battery used, recycle properly

Data Logging
- Maximum of 2000 valid records
- Maximum of 500 unique data points per Watbus bus and zone
- File storage on embedded micro SD memory
- Comma separated value (CSV) file type
- Access log files via USB device port

Memory Card
- Micro SDHC (4-32GB)
- 4GB class 4 SDHC on standard models (operating temperature: -25 to 85°C)
- 16GB class 10 SDHC on data log models (operating temperature: -40 to 85°C)
- -4 to 185°F (-20 to 85°C) ambient rating, non-volatile memory

Note: All module parameters are backed up in memory.

RMA PLUS Remote Access Module

Ordering Information

Module for communications, data logging and storage. Comes standard with Modbus® TCP, standard bus over Ethernet, USB device, internal storage and SD card.

Part Number

① ② ③ ④ EZ-ZONE Rail Mount		⑤ Additional Communication Protocols	⑥ Ultra High Density Thermocouple Input Card	⑦ Data Logging	⑧ Wireless Connectivity		⑨ Future Option	⑩ Future Option	⑪ ⑫ Additional Options
RMAP	-					-	A	A	

⑤	Additional Communication Protocols
A =	None
2 =	Modbus® RTU 232/485
5 =	DeviceNet™ (future option)

⑥	Ultra High Density T/C Input Card
A =	None
1 =	18 T/C scanner inputs (future option)
2 =	18 T/C limit inputs with one global relay output (future option)

⑦	Data Logging
A =	None
D =	Data logging to 16G SD card

⑧	Wireless Connectivity
A =	None
B =	Bluetooth® (future option)
W =	Wi-Fi (future option)

⑨	Future Option
A =	Future option

⑩	Future Option
A =	Future option

⑪ ⑫	Additional Options
AA =	Standard
XX =	Custom/locked code application specific

EZ-ZONE® RM

Compatible Accessories

COMPOSER®

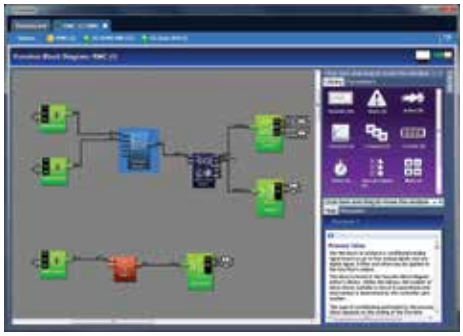

COMPOSER® is Watlow's software for configuring F4T and EZ-ZONE® RM controllers. It is used to set up functions such as control loops, profiles and alarms and link them to controller inputs and outputs. COMPOSER can be used to edit and save configurations while communicating with controllers and to download previously saved setups. It works without requiring the purchase of any communication options and is available as a free download at www.watlow.com.

EZ-ZONE Configurator Software



The EZ-ZONE configurator software is used to set up Watlow EZ-ZONE products in one simple process. It works without requiring the purchase of any communication options because it uses the standard bus communications protocol that is included with all EZ-ZONE products. EZ-ZONE configurator can be used for online and offline configurations and downloading previously saved setups. It is available as a FREE download at www.watlow.com.

SpecView



SpecView is designed for industrial users and includes features such as data logging, trending and support for bar code readers and touch screens. Errors are reduced for any process by creating application-specific screens. The software provides a historical replay option, easy-to-use recipe features and remote access options, including LAN, Internet and modem.

Operator Interface Terminals (OIT)



Silver Series EM touch-screen operator interface terminals provide a customizable user interface, email event notifications and log and graph data for Watlow controllers and other devices. A Silver Series EM operator interface terminal, paired with Watlow controllers, is the perfect solution for industrial processes or machine control applications.

Power Supplies

- AC/DC power supply converter 90-264VAC to 24VDC volts.
- P/N 0847-0299-0000 – 31 W
- P/N 0847-0300-0000 – 60 W
- P/N 0847-0301-0000 – 91 W

EZ-ZONE RM Product Documentation

- User's manual – electronic DVD, P/N 0601-0001-0000

EZ-ZONE® RMZ/RMF

By combining advances in fluorescent temperature sensing with the power of the proven EZ-ZONE® RM control system, Watlow® developed a best-in-class fiber optic temperature measurement and control system that will provide industry-leading performance for your specific application. By integrating fiber optic sensing capabilities into the EZ-ZONE RM control system, users will save space, improve performance with faster response times while simplifying their control system.

Watlow's EZ-ZONE RMZ and EZ-ZONE RMF make the system adaptable to all system requirements. Both are compatible with all other modules within the EZ-ZONE RM family and self-discover all existing modules within the system making a seamless integration into your temperature control/logic system.

EZ-ZONE RMZ Offers Fiber Optic Sensing Capabilities and EtherCAT® Communications

The EZ-ZONE RMZ integrates fiber optics, PID temperature control and EtherCAT® communications into a single package. It features multi-channel control, hosting up to four channels of fiber optic inputs as well as supporting up to 44 additional control loops from other EZ-ZONE RM modules. These modules support a wide array of capabilities including I/O, logic, current measurement, power switching and more.

EZ-ZONE RMF Offers Additional Fiber Optic Inputs for Expansion Opportunities

The EZ-ZONE RMF module is a dedicated fiber optic input module integrating the advanced control technology of the EZ-ZONE system with one to eight channels of fiber optic temperature sensing.

The EZ-ZONE RMF can also serve as additional inputs to the EZ-ZONE RMZ enabling extensive expansion opportunities for future system needs. The EZ-ZONE RMF is ideal either as an expansion module or configured with built-in temperature control loops (outputs via EZ-ZONE RME module). The EZ-ZONE RMF can be used independently when only sensing is required.



Benefits of Watlow's high-performance fluorescence-based temperature measurement system include:

- Compact integrated fiber optic sensing with temperature control
- Easily expands to increase number of zones as your system needs increase
- Integrates seamlessly with the temperature control system avoiding additional analog signal processing
- Faster temperature sampling rates with high resolution
- Minimizes installed footprint due to the small form factor and DIN-rail mounting
- Highly accurate fluorescent signal processing electronics
- Offers highly reliable LED light source designed to run at low currents for maximum life
- Up to 48 loops of input and control with all EZ-ZONE RM temperature control features
  - Temperature / limit loops
  - Current measurement
  - Power switching
  - Logic

Specifications

	EZ-ZONE RMZ	EZ-ZONE RMF
Optical Inputs	1 to 4	1 to 8
Communications	EtherCAT®, Standard Bus, EtherNet/IP™, DeviceNet™, PROFIBUS DP, Modbus® TCP, Modbus® RTU	
Short Term Stability	3σ ±0.03°C	
Operating Ambient Temperature	-18°C to 65°C	
Unit to Unit Accuracy (electronics)	±0.05°C	
Module Dimensions (mm)	51.6 (H) x 44.5 (W) x 148 (D)	
Measurement Ranges**	-70°C to 300°C (calibrated at -40°C)	
Probe Materials (typical)	Polyimide/PEEK/Polyamide-imide	
System Accuracy (calibrated)	±0.05°C	
System Accuracy (uncalibrated)	±0.5°C	
Maximum Drift	0.5°C/yr	
Analog Output*	0-10V, 0-20mA	

EZ-ZONE RMZ/RMF

EZ-ZONE RMZ Ordering Information

Module for EtherCAT® communications protocol, universal control inputs, wireless development communications and legacy communications



Part Number

①②③④ EZ-ZONE Rail Mount		⑤⑥ Number of Control Loops	⑦⑧ Number of Optical Inputs		⑨ Wireless Comms.	⑩ Legacy Comms.	⑪⑫ Connector Style/Additional Options
RMZ4	-			-			

⑤⑥	Number of Control Loops
AA =	No control loops
04 =	4 universal inputs (T/C, 2-wire RTD, 0-10VDC, 0-20mA)
08 =	8 universal inputs (T/C, 2-wire RTD, 0-10VDC, 0-20mA)
12 =	12 universal inputs (T/C, 2-wire RTD, 0-10VDC, 0-20mA)
16 =	16 universal inputs (T/C, 2-wire RTD, 0-10VDC, 0-20mA)
20 =	20 universal inputs (T/C, 2-wire RTD, 0-10VDC, 0-20mA)
24 =	24 universal inputs (T/C, 2-wire RTD, 0-10VDC, 0-20mA)
28 =	28 universal inputs (T/C, 2-wire RTD, 0-10VDC, 0-20mA)
32 =	32 universal inputs (T/C, 2-wire RTD, 0-10VDC, 0-20mA)
36 =	36 universal inputs (T/C, 2-wire RTD, 0-10VDC, 0-20mA)
40 =	40 universal inputs (T/C, 2-wire RTD, 0-10VDC, 0-20mA)
44 =	44 universal inputs (T/C, 2-wire RTD, 0-10VDC, 0-20mA)
48 =	48 universal inputs (T/C, 2-wire RTD, 0-10VDC, 0-20mA)

⑨	Wireless Communications
A =	No wireless communications
B =	Bluetooth® (wireless) development communications

⑩	Legacy Communications
A =	No wireless communications
1 =	Standard bus
2 =	Modbus®
3 =	Standard bus and Modbus®
4 =	Standard bus and DeviceNet™

⑪⑫	Connector Style/Additional Options
AA =	Standard
12 =	Class 1, Div. 2
XX =	Custom

⑦⑧	Number of Optical Inputs
AA =	No optical inputs
04 =	4 fiber optic inputs, temp. range 0-200°C (option for legacy communications is A only)
05 =	4 fiber optic inputs, temp. range 0-300°C (option for legacy communications is A only)

EZ-ZONE RMF Ordering Information

Module for fiber optic inputs with PID temperature control



Part Number

①②③④ EZ-ZONE Rail Mount		⑤⑥ Number of Fiber Optic/Temperature Control Loops	⑦ Future Option	⑧ Future Option		⑨ Future Option	⑩ Comms. Protocol	⑪⑫ Add'l Options
RMFA	-				-			

⑤⑥	Number of Fiber Optic/Temperature Control Loops
AA =	No fiber optic/temperature control loops
1A =	1 fiber optic input without temperature control loop
1T =	1 fiber optic input with temperature control loop
2A =	2 fiber optic inputs without temperature control loop
2T =	2 fiber optic inputs with temperature control loop
3A =	3 fiber optic inputs without temperature control loop
3T =	3 fiber optic inputs with temperature control loop
4A =	4 fiber optic inputs without temperature control loop
4T =	4 fiber optic inputs with temperature control loop
5A =	5 fiber optic inputs without temperature control loop
5T =	5 fiber optic inputs with temperature control loop
6A =	6 fiber optic inputs without temperature control loop
6T =	6 fiber optic inputs with temperature control loop
7A =	7 fiber optic inputs without temperature control loop
7T =	7 fiber optic inputs with temperature control loop
8A =	8 fiber optic inputs without temperature control loop
8T =	8 fiber optic inputs with temperature control loop

⑩	Communication Protocol Options
A =	Standard bus
1 =	Standard bus and Modbus® RTU 485
Note: To obtain communication protocol other than standard bus or Modbus® RTU 485 order the applicable EZ-ZONE RMZ4.	

⑪⑫	Additional Options
AA =	Standard
12 =	Class 1, Div. 2
XX =	Custom

EZ-ZONE® RMG

The EZ-ZONE® RMG controller with Adaptive Thermal Systems® (ATS™) technology is Watlow's controller for gas delivery applications. This rail-mounted controller is versatile regarding mounting within a semiconductor gas chamber and provides distributed control up to 12 amps from four outputs (up to three amps per circuit).

Watlow's ATS technology provides detection of mis-wired heaters by offering a "ping" feature test system allowing users to obtain immediate feedback from soft power prior to turning on the main power. A small amount of power is applied, and the system is tested against the input data from the free software tool. If any data does not match, including ground fault detection, a fault condition occurs signaling the built-in global replay to shut down the system. This feedback prevents catastrophic conditions associated with overheated or cold spots within the gas line system.



Features and Benefits

Offers a combination of thermocouple inputs (up to 18 per printed circuit board assembly) and field effect transistor outputs (four three-amp outlets)

- Allows users to mix and match inputs and outputs for maximum system flexibility

Built-in diagnostics

- Enables real-time data of line heating to master controller on tool

Plug and play

- Adapts directly with the EZ-ZONE RMZ EtherCAT® module

Specifications

Environment

- Unit ambient rating -18 to 65°C, 0 to 90% RH non-condensing, IP code (IP20)

EZ-ZONE RMG Card

- Ambient temperature rating (electronics) -18 to 65°C
- Heater current four channels at 3A, low voltage 20 to 40VDC, high voltage 85 to 336VDC

EZ-ZONE RMUH Card

- Ambient temperature rating (electronics) -18 to 65°C TC accuracy ± 1.0°C (pending qualification), limit relay 5A, 240VAC, RS485 standard bus, USB device

Communication Protocol via EZ-ZONE RMZ

- EtherCAT® ETG.5003.2060 compliant, Watlow standard bus, DeviceNET™

EZ-ZONE RMUH

Configure this module as an ultra high-density input module for a total of 36 inputs, including limits and control loops.

EZ-ZONE RMG

Ordering Information - RMG

Part Number

① ② EZ-ZONE Rail-Mount	③ Gas Line Heater	④ Output Card Voltage Rating	⑤ ⑥ Control Card	⑦ ⑧ Limits	⑨ ⑩ Control Loops	⑪ ⑫ Outputs	⑬ Future Option	⑭ ⑮ Custom/Locked Firmware
RM	G						A	

④	Output Card Voltage Rating
L =	Low voltage 20 to 40VDC +10%, -15%
H =	High voltage (rectified 100 to 240VAC) +10%, -15% (future option)

⑤ ⑥	Control Card
AA=	No input card selected
##=	Any number 01 to 18 = number of thermocouple sensors

⑦ ⑧	Limits
AA=	None
##=	01 to 18 number of sensors directed to supervisory global relay

⑨ ⑩	Control Loops
AA=	None
##=	01 to 18 number of control loops

⑪ ⑫	Outputs
AA=	None
##=	01 to 08 number of 3 amp outputs If > than 2 A007-3081-000X cards installed

⑬	Future Option
A =	Standard

⑭ ⑮	Custom/Locked Firmware
AA=	Standard
XX=	Custom = Any two letters of number for non-critical firmware or cosmetic options

Ordering Information - RMUH

Part Number

① ② EZ-ZONE Rail-Mount	③ ④ Ultra High Density Input	⑤ ⑥ Inputs	⑦ ⑧ Limits	⑨ ⑩ Control Loops	⑪ ⑫ Custom/ Locked Firmware
RM	UH				

⑤ ⑥	Inputs
##=	Any number 01 to 36 = number of thermocouple sensors

⑦ ⑧	Limits
AA=	None
##=	01 to 36 number of sensors directed to supervisory global relay

⑨ ⑩	Control Loops
AA=	None
##=	01 to 36 number of control loops

⑪ ⑫	Custom/Locked Firmware
AA=	Standard
XX=	Custom = Any two letters of number for non-critical firmware or cosmetic options

EZ-ZONE® RMT

Watlow's EZ-ZONE® RMT controller with Adaptive Thermal Systems® (ATS™) technology is a critical component in Watlow's STREAMLINE™ heating system for semiconductor gas delivery and exhaust applications.

While other line heating systems require a maze of wires associated with input, output and over-temperature protection, the line heating system with ATS technology streamlines the solution by offering closed loop control with integrated over-temperature safety protection for each heater with just two wires managed entirely by one EZ-ZONE RMT controller. The efficiency helps prevent system issues our customers may otherwise experience.

The need to integrate fewer controllers makes installation quicker and easier by cutting the required heater connections by two thirds. It also reduces costs and provides a more spatially-efficient system.



Features and Benefits

Allows for direct wiring of 208VAC
- Offers commonly available line voltage

Provides built-in diagnostics of each zone
- Enables real-time data of line heating to master controller on tool

Removes complications and nuisance components by migrating functions from the heater to the controller
- Creates a clean, aesthetic loop with just two wires

Incorporates an improved fault detection system
- Provides connectivity to all zones to locate and fix system issues as quickly as possible

Intelligent design
- Allows for better diagnostics, reliability and product life expectancy
- Lowers total cost of ownership

Reduces the number of design iterations needed
- Provides a complete thermal system with significantly reduced lead times

Connects via EtherCAT®
- Alligns with industry-standard communications protocol

EZ-ZONE RMT

Specifications

Voltage
- 208VAC ±10%

Ambient Ratings
- -18 to 65°C

Humidity
- 0 to 90% non-condensing

Altitude
- Maximum 2,000 meters

Installation Category II
- Pollution degree category 2
- No maintenance requirements or field serviceable parts apply to the EZ-ZONE RMT controller

Safety Relay
- 2 amps resistive, 24 - 240VAC or 30VDC, 125VA pilot duty 120/240VAC, 25VA at 24VAC

Agency Directives

ISO 13849-1 Safety of Machinery
- Safety-related parts of control systems; Part 1: General principles for design (Category 2 and performance level C)

  Third Edition, dated December 15, 2015

UL® 61010-1 Standard for Safety
- Electrical Equipment for measurement, control and laboratory use; Part 1: General requirements

  Third Edition, Dated May 11, 2012

Ordering Information

Part Number

①② EZ-ZONE Rail-Mount	③ Primary Product Function	④ Future Option	⑤⑥ Control/ Limit Loops	⑦⑧ Heater Technology	⑨ Future Option	⑩ Future Option	⑪⑫ Customization
RM	T	A			A	A	

③ Primary Product Function	
T =	TC heater sensor with integrated limit

④ Future Option	
A =	Standard product

⑤⑥ Control/Limit Loops	
06=	6 control loops (1 module card installed)
12=	12 control loops (2 module cards installed)

⑦⑧ Heater Technology	
CL=	Cloth heaters
SR=	Silicone rubber heaters

⑨ Future Option	
A =	Standard product

⑩ Future Option	
A =	Standard product

⑪⑫ Customization	
AA=	Standard product
XX=	Any two letters or number for custom non-critical options

Watlow's PM PLUS™ Enhances the User Experience With an Interface That Enables Easy Set Up



Watlow's PM PLUS™, the enhanced EZ-ZONE® PM, is now more intuitive and features an enhanced interface for easier programming and readability with a SMOOTH-TOUCH™ keypad creating an industry leading user experience. The PM PLUS is backwards compatible with legacy EZ-ZONE PM controllers but offers many user upgrades including an intuitive menu flow allowing the controller to be easily configured. It also continues to offer the industry leading Bluetooth® connectivity with the EZ-LINK™ mobile app for remote access capability and full descriptions of parameters and error codes. The PM PLUS improves the user experience by reducing the complexity at the front of the control while eliminating the dependency of cables when configuring the product.

Like the original EZ-ZONE PM, the PM PLUS can be ordered as a PID controller, or an integrated controller with multiple functions combined into one.

Now Watlow's PM PLUS is available through Watlow ***SELECT***®, a program that enables you to quickly identify, configure and receive your thermal products faster and easier than ever before. With ***SELECT***, you use a variety of tools to guide your decision, configure products for an exact fit and quickly receive your order. Visit www.watlow.com/select to learn more.

Features and Benefits

Intuitive menu flow
- Reduces menu structure to a list of lists allowing the controller to be easily configured
- Offers easy to read characters and color coding making the display visible from many angles

SMOOTH TOUCH keypad
- Eliminates contamination points on the front of the controller
- No mechanical components will wear out
- Creates a better seal on front panel
- Easy to clean

Bluetooth® compatible with EZ-LINK™ mobile app
- Provides full descriptions of parameters and error codes
- Allows remote access capabilities without the use of cables or converters
- Provides the ability to configure the product and save parameter sets

Integrated PID and limit controller
- Reduces wiring time and termination complexity compared with connecting discrete products
- Decreases required panel space
- Lowers installation costs
- Increases user and equipment safety for over/under temperature conditions

High amperage power control output
- Drives 15 ampere resistive loads directly
- Reduces component count
- Decreases cost of ownership

Current monitoring
- Detects heater current flow and provides alarm indication of a failed output device or heater load
- Drives output on open or shorted heater

Serial communication capabilities
- Provides a wide range of protocol choices including Modbus® RTU, EtherNet/IP™, Modbus® TCP, PROFIBUS DP, DeviceNet™ and J1939 CAN bus
- Supports network connectivity to a PC or PLC

Enhanced control options
- Easily handles complex process problems such as cascade, ratio, differential, square-root, motorized valve control without slidewire feedback, wet-bulb/dry-bulb, compressor control and peltier loads

Features and Benefits (cont.)

Countdown timer option
- Provides batch process control
- Supports set point change during countdown

10-point linearization curve
- Improves sensor accuracy

EZ-LINK™ mobile application for iPhone® and Android™
- Expedites controller setup with intuitive navigation
- Simplifies setting parameters with plain text names and descriptions
- Connects quickly and easily via Bluetooth® wireless communications

Configuration communications with software
- Includes Watlow standard bus communications used by COMPOSER®

Advanced PID control algorithm
- Offers TRU-TUNE®+ adaptive control to provide tighter control for demanding applications
- Provides auto-tune for fast, efficient start-up

Built-in sensor compensation curves
- Saves cost of buying compensated sensors
- Includes Vaisala RH and altitude (pressure) curves

Remote set point operation
- Supports convenient set point manipulation from a remote device such as a master control or PLC

Profile capability
- Offers pre-programmed process control
- Allows ramp/soak programming with 40 total steps

Retransmit output
- Supports industry needs for recording

Factory Mutual (FM) approved over/under limit with auxiliary outputs
- Increases user and equipment safety for over/under temperature conditions

Memory for saving and restoring parameter settings
- Decreases service calls and time down

Agency approvals: UL® listed, CSA, CE, RoHS, W.E.E.E., FM, SEMI F47-0200, Class 1, Div. 2 rating on selected models
- Assures prompt product acceptance
- Reduces end product documentation costs

Touch-safe package
- Increases safety for installer/operator
- Complies with IP2X requirements

Programmable function key
- Enables simple, one-touch operation of user-defined, repetitive activities

Programmable menu system
- Reduces setup time and increases operator efficiency

Three-year warranty
- Provides product support and reliability

Specifications

Controller
- User-selectable heat/cool, on-off, P, PI, PD, PID or alarm action
- Auto-tune with TRU-TUNE+ adaptive control algorithm
- Control sampling rates: input = 10Hz, outputs = 10Hz

Profile amp/Soak
- 4 profile , 40 total steps
- Accuracy (typical): ±30 PPM at 77°F (25°C) +30/-100 PPM at -4 to 149°F (-20 to 65°C)

Isolated Serial Communications
- EIA 232/485, Modbus® RTU
- EtherNet/IP™/Modbus® TCP
- DeviceNet™
- PROFIBUS DP
- SAE J1939 CAN bus

Wiring Termination—Touch-Safe Terminals
- Input, power and controller output terminals are touch safe, removable, 12 to 22 AWG

Universal Input
- Thermocouple, grounded or ungrounded sensors greater than 20MΩ input impedance, 3µA open sensor detection, 2kΩ source resistance max.
- RTD 2- or 3-wire, platinum, 100Ω and 1000Ω @ 32°F (0°C) calibration to DIN curve (0.00385 Ω/Ω/°C)
- Process, 0-20mA @ 100Ω, or 0-10VDC @ 20kΩ, 0-50mV at 20MΩ, 0-1000Ω potentiometer; scalable; inverse scaling

Functional Operating Range

Type J: -346 to 2192°F (-210 to 1200°C)
Type K: -454 to 2500°F (-270 to 1371°C)
Type T: -454 to 750°F (-270 to 400°C)
Type E: -454 to 1832°F (-270 to 1000°C)
Type N: -454 to 2372°F (-270 to 1300°C)
Type C: 32 to 4200°F (0 to 2315°C)
Type D: 32 to 4200°F (0 to 2315°C)
Type F: 32 to 2449°F (0 to 1343°C)
Type R: -58 to 3214°F (-50 to 1767°C)
Type S: -58 to 3214°F (-50 to 1767°C)
Type B: 32 to 3300°F (0 to 1816°C)
RTD (DIN): -328 to 1472°F (-200 to 800°C)
Process: -1999 to 9999 units

Accuracy
- Calibration accuracy and sensor conformity: ±0.1% of span, ±1°C @ the calibrated ambient temperature and rated line voltage
- Types R, S, B; 0.2%
- Type T below -50°C; 0.2%
- Calibration ambient temperature @ 77°F ±5°F (25°C ±3°C)
- Accuracy span: 1000°F (540°C) min.
- Temperature stability: ±0.1°F/°F (±0.1°C/°C) rise in ambient max.

Thermistor Input
- 0 to 40kΩ, 0 to 20kΩ, 0 to 10kΩ, 0 to 5kΩ
- 2.252kΩ and 10kΩ base at 77°F (25°C)
- Linearization curves built-in

Specifications (cont.)

Current Transformer Input
- Accepts 0-50mA signal (user-programmable range)
- Displayed operating range and resolution can be scaled and are user-programmable

Digital Inputs (DC Voltage)
- Max. input: 36V at 3mA
- Logic: min. high state 3V at 0.25mA, max. low state 2V

Digital Inputs (Dry Contact)
- Logic: min. open resistance 10kΩ, max. closed resistance 50Ω
- Max. short circuit: 20mA

2 Digital I/O (ordered with power supply option)
- Update rate: 10Hz
- Input type: user-selectable, dc voltage or dry contact
- Output type: switched dc
- Output voltage: 24V
- Output 5: 24mA max. or drive one 3-pole DIN-A-MITE®
- Output 6: 10mA max.

6 Digital I/O (ordered with communication option)
- Update rate: 10Hz
- Input type: user-selectable, dc voltage or dry contact
- Output type: user-selectable, switched dc or open collector
- Switched dc output voltage: 12 to 24VDC, depending on current draw
- Switched dc max. supplied current: 40mA at 20VDC and 80MA at 12VDC
- Switched dc max. low state: 2V
- Open collector max. switched voltage 32VDC
- Open collector max. switched current: 1.5A per output; 8A total for all 6 outputs

Output Hardware
- Switched dc: 22 to 32VDC @ 30mA max. per single output and 40mA max. total per paired outputs (1 & 2, 3 & 4)
- Open collector: 30VDC max. @ 100mA max.
- SSR, Form A, 24 to 240VAC, 1A at 50°F (10°C) to 0.5A at 149°F (65°C) resistive load, 264VAC max., opto-isolated, without contact suppression, 120/240VAC @ 20VA pilot duty
- Electromechanical relay, Form A, 24 to 240VAC or 30VDC max., 5A resistive load, 100,000 cycles at rated load, 120/240 @ 125VA or 24VAC @ 25VA pilot duty
- Electromechanical relay, Form C, 24 to 240VAC or 30VDC max., 5A resistive load, 100,000 cycles at rated load, 120/240 @ 125VA or 24VAC @ 25VA pilot duty
- NO-ARC relay, Form A, 85 to 264VAC, 15A @ 122°F (50°C), resistive load, no VDC, 2,000,000 cycles at rated load
- Universal process output: range selectable; 0 to 10VDC ±15mV into a min. 1,000Ω load with 2.5mV nominal resolution; 0 to 20mA ±30µA into max. 800Ω load with 5µA nominal resolution; temperature stability 100ppm/°C

Operator Interface
- LCD display
- SMOOTH TOUCH keypad
- Programmable function key(s)

Line Voltage/Power
- High voltage option: 85 to 264VAC, 47 to 63Hz
- Low voltage option: 20 to 28VAC, +10/-15%; 50/60Hz, ±5% or 12 to 40VDC
- Max. power consumption: 10VA ($^1/_{32}$ and $^1/_{16}$ DIN); 14VA

Environment
- Operating temperature: 0 to 149°F (-18 to 65°C)
- Storage temperature: -40 to 185°F (-40 to 85°C)
- Relative humidity: 0 to 90% RH, non-condensing

Agency Approvals
- cULus® UL®/EN/CSA C22.2 No 61010-1 Listed, File E185611
- CSA C22.2 No. 24, File 158031 ($^1/_{32}$ and $^1/_{16}$ DIN sizes)
- IP 67, IP 66 front seal
- UL® Type 4X front seal indoor locations
- cULus® ANSI/ISA 12.12.01-2012, CSA-C22.2 No. 213-1987, Class 1, Div. 2, Groups A, B, C and D, Temperature Code T4A, File E184390 (optional)
- FM Class 3545 (limit controls)
- CE, RoHS by design, W.E.E.E.
- EtherNet/IP™ and DeviceNet™ ODVA Conformance Tested displays

Comparison of Available Features

	EZ-ZONE PM6	PM6 PLUS	EZ-ZONE PM8/9	PM8/9 PLUS
Display Type	7 segment LED	LCD	7 segment LED	LCD
Multi Language (English, German, Spanish)	None	Yes	None	Yes
Keypad Interface Type	Elastomer	SMOOTH-TOUCH™	Elastomer	SMOOTH-TOUCH™
Express Model Available	Yes	None	Yes	None
PID Loops	1	1	2	2
Profile Ramp/Soak	40 total steps	40 total steps	40 total steps	40 total steps
Profile Battery Backup and Real Time Clock	None	None	Yes	Yes
Number of Digital Inputs/Outputs	0 to 2	0 to 2	0 to 2	0 to 2
Number of Outputs	1 to 6	1 to 6	1 to 6	1 to 6
Integrated Safety Limits	Yes, 1	Yes, 1	Yes, 1	Yes, 1
Independent Safety Limit	Yes	None	Yes	None
Maximum Power Output 5A Mechanical Relay	15A NO-ARC	15A NO-ARC	15A NO-ARC	15A NO-ARC
Current Measurement (Accepts 0-50mA Signal From External Current Transformer)	Yes	Yes	Yes	Yes
Standard Bus Communications	Yes	Yes	Yes	Yes
Bluetooth® Technology	Yes	Yes	None	Yes
Field Bus Communications (Modbus® RTU 232/485, EtherNet/IP™, Modbus® TCP, DeviceNet™, PROFIBUS DP, SAE J1939 CAN bus)	Yes	Yes	Yes	Yes
10-Point Calibration Offset	Yes	Yes	Yes	Yes
Ratio, Differential and Square-Root	Yes	Yes	Yes	Yes
Sensor Compensation Curves-Altitude (Pressure) and Vaisala RH	Yes	Yes	Yes	Yes
Motorized Valve Control (Without Feedback)	Yes	Yes	Yes	Yes
Wet Bulb/Dry Bulb	Yes	Yes	Yes	Yes
Cascade	None	None	Yes	Yes
Countdown Timer	Yes	Yes	Yes	Yes

Dimensional Drawings

PM6

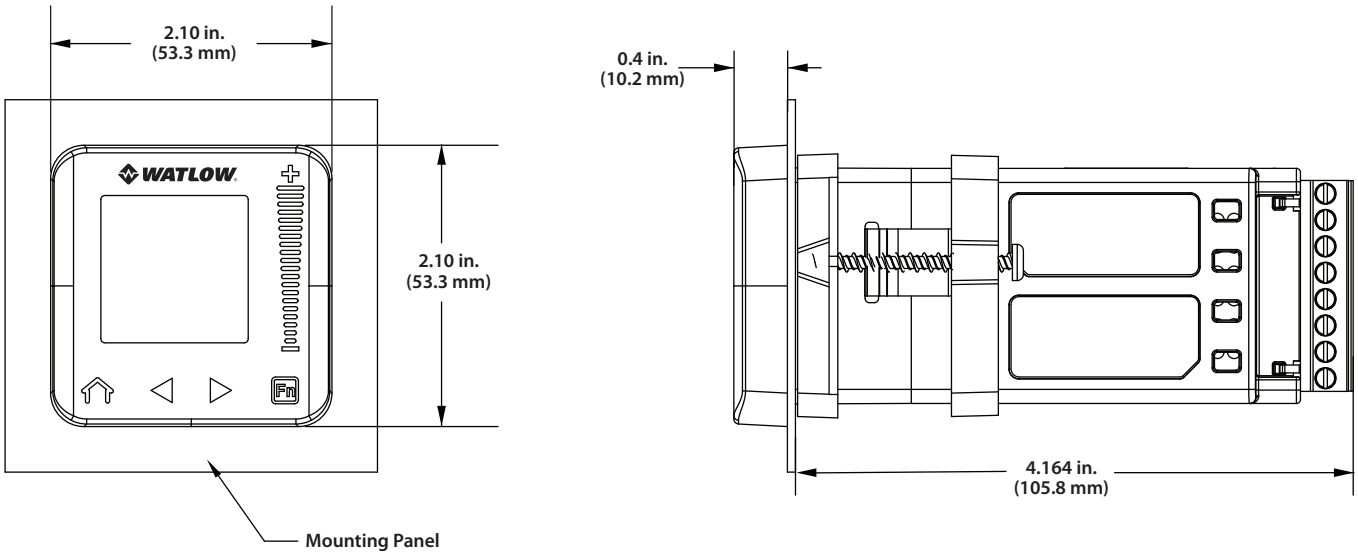

Dimensional Drawings (cont.)

PM8

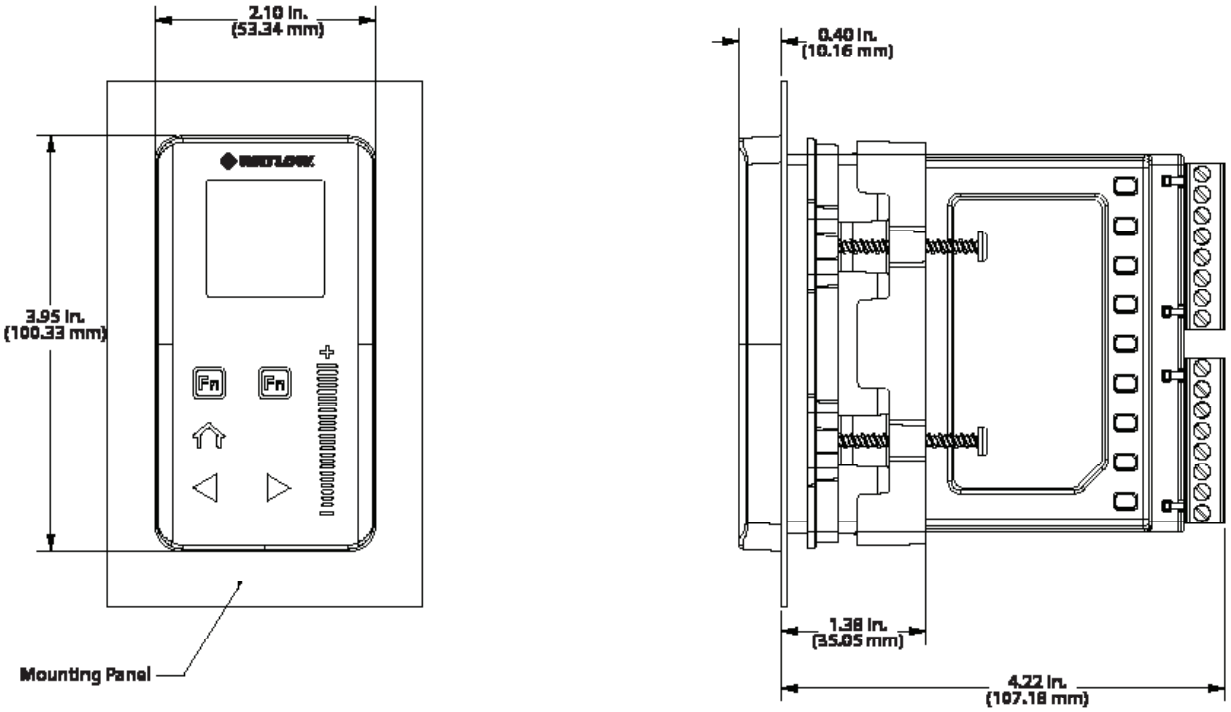

PM9

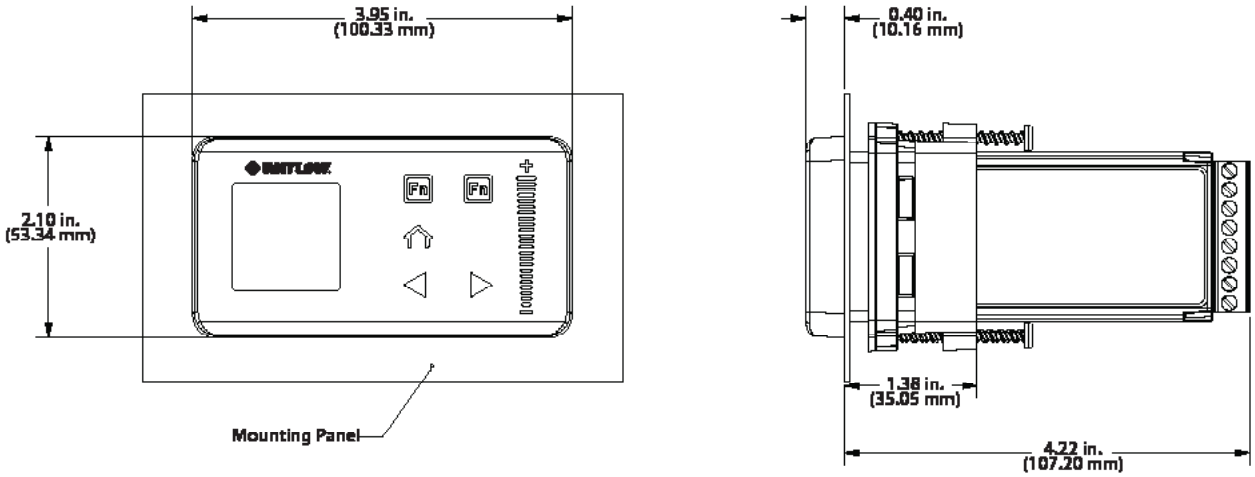

Typical Block Diagram



NOTE:
Watlow's EZ-LINK app is only available with EZ-ZONE® PM6 and the PM PLUS controllers.

Compatible Accessories

More information is available on these products at www.watlow.com



Watlow's new EZ-LINK app allows users to easily setup, monitor and adjust Watlow EZ-ZONE PM and PM PLUS controllers via Bluetooth®. The app is available free-of-charge from the app store for phones and tablets, and provides access to the controller's parameters with fully spelled out names in plain text with help topics that explain each parameter and option. EZ-LINK mobile application connects quickly and easily via Bluetooth® wireless communications. Download the EZ-Link App for iPhone®. EZ-LINK at GET IT ON Google Play for Android™ or Download on the App Store

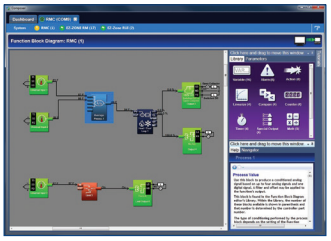

COMPOSER with INTUITION® is Watlow's easy-to-use software for configuring and customizing controllers. Use it to optimize Watlow's F4T and EZ-ZONE PM, PM PLUS and RM controllers for specific applications. Task-specific views simplify all aspects of commissioning new controllers including managing the inputs and outputs from pluggable flex modules, setting up functions such as control loops and alarms and creating and editing profiles. COMPOSER software is included on the "Watlow Support Tools" DVD and available for download at www.watlow.com.

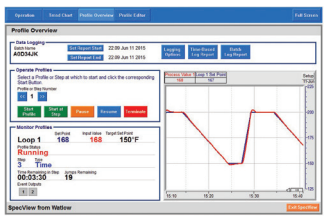

SpecView is designed for industrial users with features such as data logging, trending and support for bar code readers and touch screens. Errors are reduced, for any process, by creating application-specific screens. The software provides a historical replay option, easy-to-use recipe features and remote access options, including LAN, Internet and modem.



Silver Series EM touch screen operator interface terminals provide a customizable user interface, email event notifications and log and graph data for Watlow controllers and other devices. A Silver Series EM operator interface terminal paired with Watlow controllers is the perfect solution for your industrial process or machine control application.

PM PLUS PID Model Configuration Code

①②	③	④	⑤	⑥⑦	⑧	⑨⑩⑪	⑫	⑬⑭
	Package Size	Primary Functions	Power Supply Digital I/O	Output 1 and 2 Hardware Options	Comm. Options	Future Options	Model Selection	Custom Options
PM						A A A		

③	Package Size
6 =	1/16 DIN
8 =	1/8 DIN (Vertical)
9 =	1/8 DIN (Horizontal)

④	Primary Functions
C =	PID controller with universal input
R =	PID controller with universal input and profiling ramp/soak
T =	PID controller with universal input and countdown timer
J =	PID controller with thermistor input
N =	PID controller with thermistor input and profiling ramp/soak

⑤	Power Supply, Digital Inputs/Outputs (I/O)
1 =	100 to 240VAC
2 =	100 to 240VAC plus 2 digital I/O points
3 =	20 to 28VAC or 12 to 40VDC
4 =	20 to 28VAC or 12 to 40VDC, plus 2 digital I/O points

⑥⑦	Output 1 and 2 Hardware Options	
	Output 1	Output 2
CA =	Switched dc/open collector	None
CH =	Switched dc/open collector	NO-ARC 15A power control
CC =	Switched dc/open collector	Switched dc
CJ =	Switched dc/open collector	Mechanical relay 5A, Form A
CK =	Switched dc/open collector	SSR Form A, 0.5A
EA =	Mechanical relay 5A, Form C	None
EH =	Mechanical relay 5A, Form C	NO-ARC 15A power control
EC =	Mechanical relay 5A, Form C	Switched dc
EJ =	Mechanical relay 5A, Form C	Mechanical relay 5A, Form A
EK =	Mechanical relay 5A, Form C	SSR Form A, 0.5A
FA =	Universal process	None
FC =	Universal process	Switched dc
FJ =	Universal process	Mechanical relay 5A, Form A
FK =	Universal process	SSR Form A, 0.5A
AK =	None	SSR Form A, 0.5A
KH =	SSR Form A, 0.5A	NO-ARC 15A power control
KK =	SSR Form A, 0.5A	SSR Form A, 0.5A

⑧	Communication Options or Additional Digital Outputs
Standard bus always included	
A =	None
B =	Bluetooth®*
E =	EIA 485 Modbus® RTU and Bluetooth®*
F =	Modbus® RTU 232/485 and Bluetooth®*
G =	EtherNet/IP™/ Modbus® TCP and Bluetooth®*
H =	DeviceNet™ and Bluetooth®*
J =	PROFIBUS DP and Bluetooth®*
K =	SAE J1939 CAN bus and Bluetooth®*
1 =	EIA 485 Modbus® RTU
2 =	EIA 232/485 Modbus® RTU
3 =	EtherNet/IP™/Modbus® TCP
5 =	DeviceNet™
6 =	PROFIBUS DP
7 =	SAE J1939 CAN bus
C =	6 digital I/O (not available on 1/16 DIN models)
D =	6 digital I/O and EIA 485 Modbus® RTU (not available on 1/16 DIN models)
M =	6 digital I/O and Bluetooth® (not available on 1/16 DIN models)*
N =	6 digital I/O and EIA 485 Modbus® RTU and Bluetooth® (not available on 1/16 DIN models)*
***Note:** Bluetooth® not available in all countries, contact factory.	

⑨⑩⑪	Future Options
AAA =	Future Options

⑫	Model Selection
P =	PM PLUS PID Version **(Output 1 and 2 always isolated)**
V =	PM PLUS Enhanced firmware **(isolated input 1 and input 2 is always isolated)**
X =	Not an order option. Appears when Express menu selected.

⑬⑭	Custom Options
WP =	Watlow logo face plate
WN =	Face plate no logo/no name
AG =	Conformal coating
12 =	Class 1, Div. 2 (not available with mechanical relay Output types E, H or J)

PM PLUS Integrated PID Controller Configuration Code

WATLOW SELECT

①②	③ Package Size	④ Primary Functions	⑤ Power Supply Digital I/O	⑥⑦ Output 1 and 2 Hardware Options	⑧ Comm. Options	⑨ Auxiliary Control Functions	⑩⑪ Output 3 and 4 Hardware Options	⑫ Model Selection	⑬⑭ Custom Options
PM									

③ Package Size

6 =	1/16 DIN
8 =	1/8 DIN (vertical)
9 =	1/8 DIN (horizontal)

④ Primary Functions

C =	PID controller with universal input
B =	PID controller with universal input and profiling ramp/soak and battery back-up with real time clock
E =	PID controller with thermistor input and profiling ramp/soak and battery back-up with real time clock
R =	PID controller with universal input and profiling ramp/soak
T =	PID controller with universal input and countdown timer
J =	PID controller with thermistor input
N =	PID controller with thermistor input and profiling ramp/soak

Note: Options B and E are not available with 1/16 DIN (PM6) models

⑤ Power Supply, Digital Inputs/Outputs (I/O)

1 =	100 to 240VAC
2 =	100 to 240VAC plus 2 digital I/O points
3 =	20 to 28VAC or 12 to 40VDC
4 =	20 to 28VAC or 12 to 40VDC, plus 2 digital I/O points

⑥⑦ Output 1 and 2 Hardware Options

	Output 1	Output 2
CA =	Switched dc/open collector	None
CH =	Switched dc/open collector	NO-ARC 15A power control
CC =	Switched dc/open collector	Switched dc
CJ =	Switched dc/open collector	Mechanical relay 5A, Form A
CK =	Switched dc/open collector	SSR Form A, 0.5A
EA =	Mechanical relay 5A, Form C	None
EH =	Mechanical relay 5A, Form C	NO-ARC 15A power control
EC =	Mechanical relay 5A, Form C	Switched dc
EJ =	Mechanical relay 5A, Form C	Mechanical relay 5A, Form A
EK =	Mechanical relay 5A, Form C	SSR Form A, 0.5A
FA =	Universal process	None
FC =	Universal process	Switched dc
FJ =	Universal process	Mechanical relay 5A, Form A
FK =	Universal process	SSR Form A, 0.5A
AK =	None	SSR Form A, 0.5A
KH =	SSR Form A, 0.5A	NO-ARC 15A power control
KK =	SSR Form A, 0.5A	SSR Form A, 0.5A

⑧ Communication Options or Additional Digital Outputs

Standard bus always included

A =	None
B =	Bluetooth®*
E =	EIA 485 Modbus® RTU and Bluetooth®*
F =	Modbus® RTU 232/485 and Bluetooth®*
G =	EtherNet/IP™/ Modbus® TCP and Bluetooth®*
H =	DeviceNet™ and Bluetooth®*
J =	PROFIBUS DP and Bluetooth®*
K =	SAE J1939 CAN bus and Bluetooth®*
1 =	EIA 485 Modbus® RTU
2 =	EIA 232/485 Modbus® RTU
3 =	EtherNet/IP™/Modbus® TCP
5 =	DeviceNet™
6 =	PROFIBUS DP
7 =	SAE J1939 CAN bus
C =	6 digital I/O (not available on 1/16 DIN models)
D =	6 digital I/O and EIA 485 Modbus® RTU (not available on 1/16 DIN models)
M =	6 digital I/O and Bluetooth® (not available on 1/16 DIN models)*
N =	6 digital I/O and EIA 485 Modbus® RTU and Bluetooth® (not available on 1/16 DIN models)*

⑨ Auxiliary Control Functions

A =	None
C =	2nd PID channel with universal input (not valid on 1/16 DIN models)
J =	2nd PID channel with thermistor input (not valid on 1/16 DIN models)
R =	Auxiliary 2nd input (universal input)
P =	Auxiliary 2nd input (thermistor input)
T =	Current transformer input (not valid Output 3 and 4) selections = FA, FC, FJ and FK)
L =	Integrated limit controller with universal input (only valid Output 3 and 4 selections = CJ, EJ and AJ)
M =	Integrated limit controller with thermistor input (only valid Output 3 and 4 selections = CJ, EJ and AJ)

Note: If communication options F, G, H, J, K or 2 thru 7 is ordered in previous digit, then Option A must be ordered here.
All Models: Auxiliary input supports remote set point, backup sensor ratio, differential and wet-bulb/dry-bulb.

⑩⑪ Output 3 and 4 Hardware Options

	Output 3	Output 4
AA =	None	None
AJ =	None	Mechanical relay 5A, Form A
AK =	None	SSR Form A, 0.5A
CA =	Switched dc/open collector	None
CH =	Switched dc/open collector	NO-ARC 15A power control
CC =	Switched dc/open collector	Switched dc
CJ =	Switched dc/open collector	Mechanical relay 5A, Form A
CK =	Switched dc/open collector	SSR Form A, 0.5A
EA =	Mechanical relay 5A, Form C	None
EH =	Mechanical relay 5A, Form C	NO-ARC 15A power control
EC =	Mechanical relay 5A, Form C	Switched dc
EJ =	Mechanical relay 5A, Form C	Mechanical relay 5A, Form A
EK =	Mechanical relay 5A, Form C	SSR Form A, 0.5A
FA =	Universal process	None
FC =	Universal process	Switched dc
FJ =	Universal process	Mechanical relay 5A, Form A
FK =	Universal process	SSR Form A, 0.5A
KH =	SSR Form A, 0.5A	NO-ARC 15A power control
KK =	SSR Form A, 0.5A	SSR Form A, 0.5A

1/16 **DIN Models:** If communication options F, G, H, J, K or 2 thru 7 is ordered in previous digit, then Option AA must be ordered here.

1/16 **DIN Models:** Output options CH, EH and KH are not valid.

⑫ Model Selection

P =	PM PLUS PID Version **(Output 1 and 2 always isolated)**
V =	PM PLUS Enhanced firmware **(isolated input 1 and input 2 is always isolated)**
X =	Not an order option. Appears when Express menu selected.

⑬⑭ Custom Options

WP =	Watlow logo face plate
WN =	Face plate no logo/no name
AG =	Conformal coating
12 =	Class 1, Div. 2 (not available with integrated limit Option "L" or "M", or with Output types E, H or J)

***Note:** Bluetooth® not available in all countries, contact factory.

PM LEGACY™

The PM LEGACY™ series panel mount controller is an industry leading PID controller that allows optimal performance utilizing simple control and menu functionality without complex features. It is ideally suited for basic applications and usage levels.

The LEGACY includes one universal input and an option for up to two outputs and is available in 1/32, and 1/16 DIN panel mount packages. It can be ordered as a PID process controller or as a dedicated over and under-temperature limit controller.

Features and Benefits

Simplified menu
- Fits basic applications with a user-friendly interface supported by two menus and a streamlined list of parameters
- Eliminates user complexity often experienced with more advanced controllers and unnecessary features
- Reduces user training costs and user programming errors

PID auto-tune
- Provides auto-tune for fast, efficient start-up

Standard bus communications
- Allows easy product configuration via PC communications protocol and free software
- Saves time, simplifies programming process and improves reliability of controller setup

Factory Mutual (FM) approved over and under limit with auxiliary outputs
- Increases user and equipment safety for over and under-temperature conditions

Touch-safe package
- Increases installer and operator safety
- Complies with IP2X requirements

EZ-LINK™ mobile application for iPhone® and Android™
- Expedites controller setup with intuitive navigation
- Simplifies setting parameters with plain text names and descriptions
- Connects quickly and easily via Bluetooth® wireless communications

SMOOTH TOUCH™ keypad
- Eliminates contamination points on the front of the controller
- Prevents premature failure of mechanical components
- Creates a better seal on front panel
- Ensures an easy to clean surface



Agency approvals: UL® listed, CSA, CE, RoHS, W.E.E.E., FM, SEMI F47-0200, Class 1, Div. 2 rating on selected models
- Assures prompt product acceptance
- Reduces end product documentation costs

P3T armor sealing system
- Complies to NEMA 4X, IP66 and IP67 specifications
- Allows controller to be cleaned and washed
- Certified UL® 50 independent to NEMA 4X specification

Consistent Termination Labeling (CTL) connection system
- Simplifies switching between products
- Speeds up user's system documentation

Three-year warranty
- Demonstrates Watlow's reliability and product support

High-amperage power control output (1/16 DIN only)
- Drives 15 ampere resistive loads direct
- Reduces component count
- Saves panel space and simplifies wiring
- Reduces cost of ownership

PM LEGACY

Specifications

Line Voltage/Power

- 85 to 264VAC, 47 to 63Hz
- 20 to 28VAC, +10/-15%; 50/60Hz, ±5%
- 12 to 40VDC
- 10VA ($^{1}/_{32}$ and $^{1}/_{16}$ DIN)
- Data retention upon power failure via non-volatile memory
- Compliant SEMI F47-0200, Figure R1-1 voltage sag requirements @ 24VAC or higher

Environment

- 0 to 149°F (-18 to 65°C) operating temperature
- -40 to 185°F (-40 to 85°C) storage temperature
- 0 to 90% RH, non-condensing

Accuracy

- Calibration accuracy and sensor conformity: ±0.1% of span, ±1°C @ the calibrated ambient temperature and rated line voltage
  - Type S: 0.2%
  - Type T below -50°C: 0.2%
- Calibration ambient temperature @ 77°F ±5°F (25°C ±3°C)
- Accuracy span: 1000°F (540°C) min.
- Temperature stability: ±0.1°F/°F (±0.1°C/°C) rise in ambient max.

Agency Approvals

- cULus® UL®/EN/CSA C22.2 No 61010-1 Listed, File E185611
- CSA C22.2 No. 24, File 158031
- UL® 50 4X indoor locations, NEMA 4X, IP66, IP67 front seal
- cULus® ANSI/ISA 12.12.01-2007, CSA-C22.2 No. 213-1987, Class 1, Div. 2, Groups A, B, C and D, temperature code T4A, File E184390 (optional)
- CE, RoHS by design, W.E.E.E.
- FM Class 3545 (limit controls)

Controller

- User selectable heat/cool, on-off, P, PI, PD, PID or alarm action, not valid for limit controllers
- Auto-tune with control algorithm
- Control sampling rates: Input = 10Hz, outputs = 10Hz
- Input and output capacity per controller type ordering information

Serial Communications

- Isolated communications
- Standard bus configuration protocol

Wiring Termination—Touch-Safe Terminals

- Input, power and controller output terminals are touch safe removable 12 to 22 AWG

Universal Input

- Thermocouple, grounded or ungrounded sensors, greater than 20MΩ input impedance, 2kΩ source resistance max.
  - Non-isolated to switched dc and process output
- RTD 2- or 3-wire, platinum, 100Ω @ 0°C calibration to DIN curve (0.00385 Ω/Ω/°C)
- Process, 4-20mA @ 100Ω, or 0-10VDC @ 20kΩ input impedance; scalable

Functional Operating Range

Type J: -346 to 2192°F (-210 to 1200°C)
Type K: -454 to 2500°F (-270 to 1371°C)
Type T: -454 to 750°F (-270 to 400°C)
Type E: -454 to 1832°F (-270 to 1000°C)
Type N: -454 to 2372°F (-270 to 1300°C)
Type C: 32 to 4200°F (0 to 2315°C)
Type D: 32 to 4200°F (0 to 2315°C)
Type F: 32 to 2449°F (0 to 1343°C)
Type R: -58 to 3214°F (-50 to 1767°C)
Type S: -58 to 3214°F (-50 to 1767°C)
Type B: 32 to 3300°F (0 to 1816°C)
RTD (DIN): -328 to 1472°F (-200 to 800°C)
Process: -1999 to 9999 units

Output Hardware

- Switched dc = 22 to 32VDC @ 30mA
- Open collector = 30VDC max. @ 100mA max. current sink
- Solid state relay (SSR), Form A, 0.5A @ 24VAC min., 264VAC max., opto-isolated, without contact suppression
- Electromechanical relay, Form C, 24 to 240VAC or 30VDC max., 5A resistive load, 100,000 cycles at rated load
- Electromechanical relay, Form A, 24 to 240VAC or 30VDC max., 5A resistive load, 100,000 cycles at rated load
  - Output 2 is limit for limit models
- NO-ARC relay, Form A, 24 to 240VAC, 15A @ 122°F (50°C), resistive load, no VDC, 2 million cycles at rated load
- Universal process output: Range selectable; 0 to 10VDC ±15mV into a min. 1,000Ω load with 2.5mV nominal resolution; 4 to 20mA ±30µA into max. 800Ω load with 5µA nominal resolution; temperature stability 100ppm/°C

Operator Interface

- Dual 4 digit, 7 segment LED displays
- Typical display update rate 1Hz
- Advance, infinity (RESET), up and down keys plus a FUNCTION KEY (not available in $^{1}/_{32}$ DIN)
- Infinity key is also labeled RESET on limit control models
- FUNCTION KEY on $^{1}/_{16}$ DIN package automatically programmed as an auto/manual transfer mode function on PID models

PM LEGACY

Typical Block Diagram

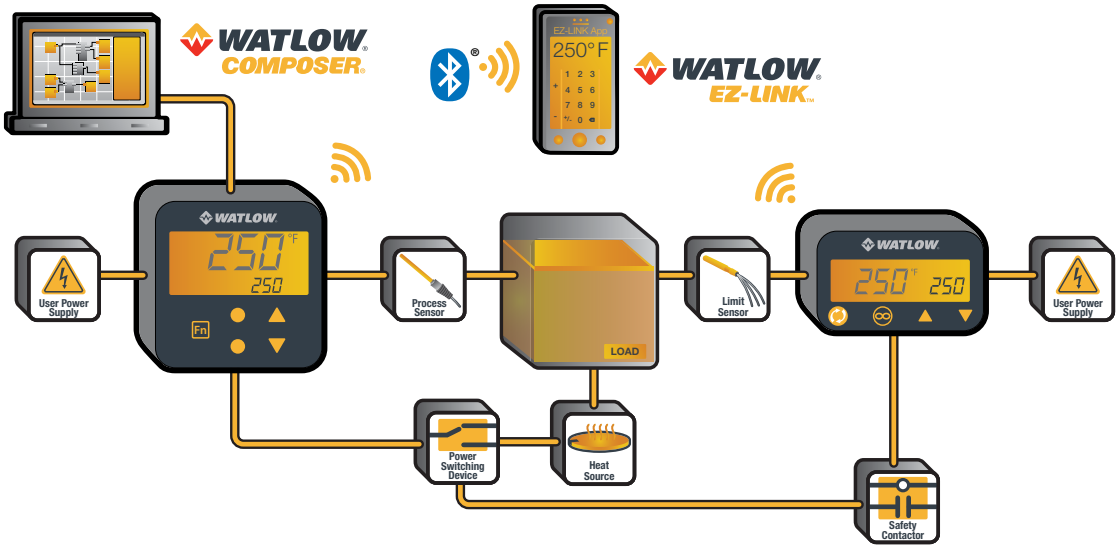

Dimensional Drawings

PM LEGACY 1/32 DIN

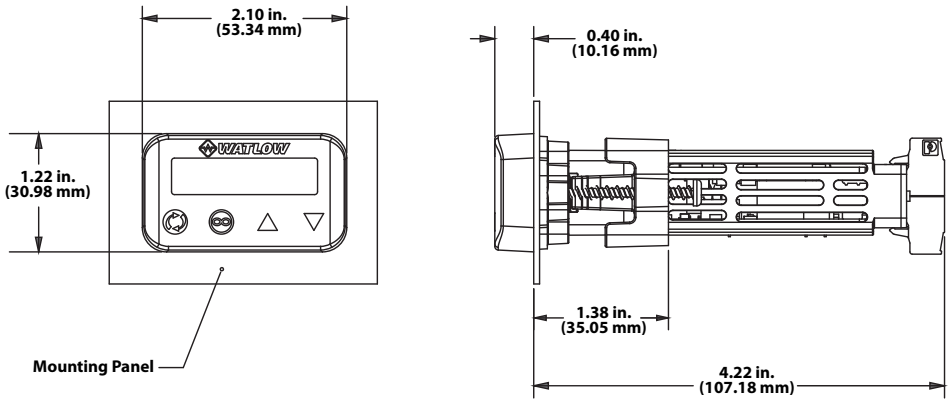

PM LEGACY 1/16 DIN

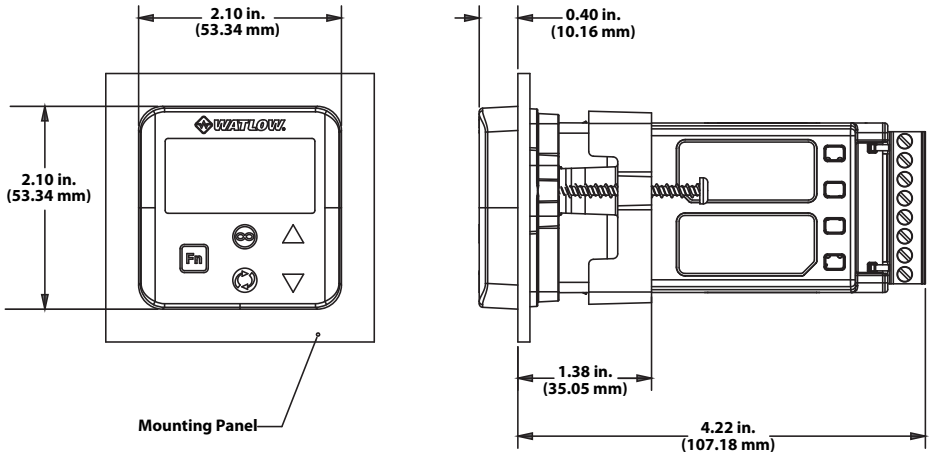

PM LEGACY

Comparison of Available Features

	1/32 DIN	1/16 DIN
PID Loops	1	1
Profile Ramp/Soak	40 total steps	None
Full Menu	Yes	None
Express Menu	Yes	Yes
Number of Digital Inputs/Outputs	0 to 2	0 to 2
Number of Outputs	1 to 4	1 to 6
Integrated Limits	None	None
Discrete Limit	Yes	Yes
Maximum Power Output	5A mechanical relay	15A NO-ARC
Current Measurement	None	None
Standard Bus Communications	Yes	Yes
Bluetooth® Technology	Yes	Yes
Field Bus Communications	Modbus® RTU 485	Limit only
Countdown Timer	Yes	None

Compatible Accessories

More information is available on these products at www.watlow.com.

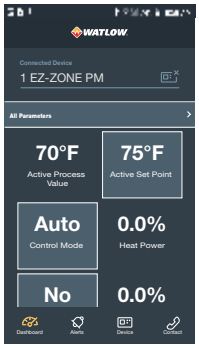

Watlow's new EZ-LINK™ app allows users to easily setup, monitor and adjust Watlow PM LEGACY controllers via Bluetooth®. The app is available free-of-charge from the app store for phones and tablets, and provides access to the controller's parameters with fully spelled out names in plain text with help topics that explain each parameter and option. EZ-LINK mobile application connects quickly and easily via Bluetooth® wireless communications. Download the EZ-Link App at Google Play for Android™ or App Store for iPhone®.



SpecView is designed for industrial users with features such as data logging, trending and support for bar code readers and touch screens. Errors are reduced, for any process, by creating application-specific screens. The software provides a historical replay option, easy-to-use recipe features and remote access options, including LAN, Internet and modem.



COMPOSER® is Watlow's easy-to-use software for configuring and customizing controllers. Use it to optimize Watlow's F4T and PM LEGACY and EZ-ZONE RM controllers for specific applications. Task-specific views simplify all aspects of commissioning new controllers including managing the inputs and outputs from pluggable flex modules, setting up functions such as control loops and alarms and creating and editing profiles. COMPOSER software is available for download at www.watlow.com.



Silver Series EM touch screen operator interface terminals provide a customizable user interface, email event notifications and log and graph data for Watlow controllers and other devices. A Silver Series EM operator interface teminal paired with Watlow controllers is the perfect solution for your industrial process or machine control application.

PM LEGACY

PM LEGACY Control Configuration Information

Part Number

① ②	③	④	⑤	⑥ ⑦	⑧	⑨ ⑩ ⑪	⑫	⑬ ⑭
PM	Package Size	Primary Functions	Power Supply, Digital I/O	Output 1 and 2 Hardware Options	Comm. Options	Future Options	Model Selection	Customs Options
						AAA		

③ Power Supply	
3 =	1/32 DIN
6 =	1/16 DIN

④ Primary Functions	
C =	PID controller with universal input
R =	PID controller with universal input and profiling ramp/soak **(Not available on 1/16 DIN or Express version)**
T =	PID controller with universal input and countdown timer **(Not available on 1/16 DIN or Express version)**
J =	PID controller with thermistor input **(Not available on 1/16 DIN or Express version)**
N =	PID controller with universal input and profiling ramp/soak **(Not available on 1/16 DIN or Express version)**

⑤ Power Supply, Digital Inputs/Outputs (I/O)	
1 =	100 to 240VAC
2 =	100 to 240VAC plus 2 digital I/O points **(Not available on 1/16 DIN or Express version)**
3 =	20 to 28VAC or 12 to 40VDC
4 =	20 to 28VAC or 12 to 40VDC, plus 2 digital I/O points **(Not available on 1/16 DIN or Express version)**

⑥ ⑦ Output 1 and 2 Hardware Options		
	Output 1	Output 2
CA =	Switched dc/open collector	None
CH*=	Switched dc/open collector	NO-ARC 15A power control
CC =	Switched dc/open collector	Switched dc
CJ =	Switched dc/open collector	Mechanical relay 5A, Form A
CK =	Switched dc/open collector	SSR Form A, 0.5A
EA =	Mechanical relay 5A, Form C	None
EH*=	Mechanical relay 5A, Form C	NO-ARC 15A power control
EC =	Mechanical relay 5A, Form C	Switched dc
EJ =	Mechanical relay 5A, Form C	Mechanical relay 5A, Form A
EK =	Mechanical relay 5A, Form C	SSR Form A, 0.5A
FA =	Universal process	None
FC =	Universal process	Switched dc
FJ =	Universal process	Mechanical relay 5A, Form A
FK =	Universal process	SSR Form A, 0.5A
AK =	None	SSR Form A, 0.5A
KH*=	SSR Form A, 0.5A	NO-ARC 15A power control
KK =	SSR Form A, 0.5A	SSR Form A, 0.5A

*CH, EH, KH - Not available with the 1/32 DIN (PM3) package size.

⑧ Communication Options	
Standard bus always included	
A =	None
B =	Bluetooth®
E =	EIA-485 Modbus® RTU and Bluetooth® **(Not available on 1/16 DIN or Express version)**
1 =	EIA-485 Modbus® RTU **(Not available on 1/16 DIN or Express version)**
Note: Bluetooth® not available in all countries, contact factory.	

⑫ Model Selection	
N =	PM LEGACY Version **(Only available in PM3) (Input 1 always isolated)**
H =	PM LEGACY EXPRESS Version **(Available in PM3 or PM6) (Input 1 always isolated)**

⑬ ⑭ Custom Options	
WP =	Watlow logo face plate
WN =	No logo/no name face plate
AG =	Conformal coating
12 =	Class 1, Div. 2 (not available with mechanical relay Output Types E, H or J)

PM LEGACY

PM LEGACY Limit Model Configuration Information

Part Number

① ②	③	④	⑤	⑥ ⑦	⑧	⑨	⑩ ⑪	⑫	⑬ ⑭
	Package Size	Primary Functions	Power Supply, Digital I/O	Output 1 and 2 Hardware Options	Comm. Options	Future Option	Output 3 and 4 Hardware Options	Model Selection	Customs Options
PM						A			

③	Power Supply
3 =	1/32 DIN
6 =	1/16 DIN

④	Primary Functions
L =	Limit controller with universal input
M =	Limit controller with thermistor input

⑤	Power Supply, Digital Inputs/Outputs (I/O)
1 =	100 to 240VAC
2 =	100 to 240VAC plus 2 digital I/O points **(Not available on Express version)**
3 =	20 to 28VAC or 12 to 40VDC
4 =	20 to 28VAC or 12 to 40VDC, plus 2 digital I/O points **(Not available on Express version)**

⑥⑦	Output 1 and 2 Hardware Options	
	Output 1	Output 2
AJ =	None	Mechanical relay 5A, Form A
CJ =	Switched dc/open collector	Mechanical relay 5A, Form A
EJ =	Mechanical relay 5A, Form C	Mechanical relay 5A, Form A

⑧	Communication Options
Standard bus always included	
A =	None
B =	Bluetooth®
E =	EIA-485 Modbus® RTU and Bluetooth® **(Not available on Express version)**
F =	Modbus® RTU 232/485 and Bluetooth® **(Not available on PM3 or Express version)**
G =	EtherNet/IP™/Modbus® TCP and Bluetooth® **(Not available on PM3 or Express version)**
H =	DeviceNet™ and Bluetooth® **(Not available on PM3 or Express version)**
J =	PROFIBUS DP and Bluetooth® **(Not available on PM3 or Express version)**
1 =	EIA-485 Modbus® RTU **(Not available on Express version)**
2 =	EIA-232/485 Modbus® RTU **(Not available on PM3 or Express version)**
3 =	EtherNet/IP™/Modbus® TCP **(Not available on PM3 or Express version)**
5 =	DeviceNet™ **(Not available on PM3 or Express version)**
6 =	PROFIBUS DP **(Not available on PM3 or Express version)**
Note: Bluetooth® not available in all countries, contact factory.	

⑩ ⑪	Output 3 and 4 Hardware Options	
	Output 3	Output 4
AA =	None	None
AJ =	None	Mechanical relay 5A, Form A
AK =	None	SSR Form A, 0.5A
CA =	Switched dc/open collector	None
CC =	Switched dc/open collector	Switched dc
CJ =	Switched dc/open collector	Mechanical relay 5A, Form A
CK =	Switched dc/open collector	SSR Form A, 0.5A
EA =	Mechanical relay 5A, Form C	None
EC =	Mechanical relay 5A, Form C	Switched dc
EJ =	Mechanical relay 5A, Form C	Mechanical relay 5A, Form A
EK =	Mechanical relay 5A, Form C	SSR Form A, 0.5A
FA =	Universal process	None
FC =	Universal process	Switched dc
FJ =	Universal process	Mechanical relay 5A, Form A
FK =	Universal process	SSR Form A, 0.5A
KK =	SSR Form A, 0.5A	SSR Form A, 0.5A
Note: Only available on 1/16 DIN models if communication Options F, G, H, J or 2 thru 6 is ordered in previous digit, then Option AA must be ordered here.		

⑫	Model Selection
G =	PM LEGACY Version **(Input 1 always isolated)**
H =	PM LEGACY EXPRESS Version (**Available in PM3 or PM6) (Input 1 always isolated)**

⑬⑭	Custom Options
WP =	Watlow logo face plate
WN =	No logo/no name face plate
AG =	Conformal coating

POWERGLIDE®

POWERGLIDE® is a unique embodiment of Watlow's Adaptive Thermal Systems® (ATS™) technology and combines temperature and power control into one ATS-enabled device ideal for semiconductor processing applications.

The process activities in a semiconductor chamber can cause the inner and outer zones of a two-zone aluminum nitride ceramic pedestal to change temperature, sometimes in different directions. Open loop or power ratio control is the current method of determining how much power to deliver to the outer zone based on the power of the inner zone, since there is typically no sensor in the hard-to-access outer zone. This causes the outer zone to react in the same manner as the inner zone when the boundary conditions change due to gas introduction, pedestal repositioning, plasma application or wafer placement. This parallel action might be opposite of what is needed to maintain proper temperature uniformity. This can cause significant temperature difference in the inner and outer zones resulting in poor thermal uniformity and reduction in yield. In addition, when the temperature delta between the zones becomes too large cracked pedestals and broken wafers are typical non-desired results.

Watlow's solution… POWERGLIDE, enabled with ATS technology, a next generation controller.

Watlow's new POWERGLIDE enables certain two-zone aluminum nitride ceramic pedestals to perform more efficiently. It runs closed loop and monitors temperature from both zones to improve uniformity, help prevent ceramic breakage, achieve higher temperatures and provide visibility to changing conditions.

With POWERGLIDE, users will gain total control of power quality. POWERGLIDE features Watlow's innovative ATS technology and incorporates power conversion, a technology platform that regulates power up and down rather than on and off. In addition, POWERGLIDE incorporates an algorithm that uses temperature co-efficient of resistance (TCR) to measure temperature and provide control, which is a technology platform that converts every heater zone into a sensor, as well as ceramic protection algorithms.

POWERGLIDE offers several communication protocols including EtherCAT®, which is optimized for the semiconductor manufacturing industry.



Features and Benefits

Built-in automatic calibration algorithm

- Eliminates downtime associated with calibration

High TCR heater materials based temperature control

- Allows closed loop control for all zones

Incorporates ceramic control algorithms

- Maintains the limitations of the materials to protect the pedestal
- Provides programmable, state-based PID control

EtherCAT® communications protocol

- Ensures adherence to industry standard protocols

POWERGLIDE

Specifications

Line Voltage/Power
- 85 to 264VAC, 47 to 63Hz
- 20 to 28VAC, +10/-15%; 50/60Hz, ±5%
- 12 to 40VDC
- 10VA ($^{1}/_{32}$ and $^{1}/_{16}$ DIN)
- Data retention upon power failure via non-volatile memory
- Compliant SEMI F47-0200, Figure R1-1 voltage sag requirements @ 24VAC or higher

Environmental
- Operating temperature: 0 to 50°C
- Humidity: 5% to 95% RH non-condensing

Physical
- Dimensions: 9.0 in. L x 5.5 in. W x 4.0 in. T
- Weight: 6.15 lbs including heat sink
- Mounting: Can be paired with a second unit to share heat sink fan, 4 #8 screws to a back plate

Power Outputs
- Quantity: Two, 1 per zone pedestal
- Output voltage: 0-208V rectified AC
- Output current: 30A (peak), 25A steady state max.
- Interlock relay: 1, form A - 5A, 24V

Power Input
- Quantity: Two, 1 per zone, each zone isolated from the other
- Input voltage: 85 to 264VAC/DC

Electronics (Logic) Power
- 24VDC on DB9

Communications
- RS-485 on pair of DB9 with pass-through, Watlow standard bus protocol
- EtherCAT® supporting ETG.5003.2060
- USB device 2.0, Watlow standard bus protocol

Sensing Inputs
- 2 zones of thermocouple Type K for reference sensing
- Heater resistance 1 to 30 ohms via delivered I and V resolution 0.001Ω
- Heater measurement accuracy 0.01 ohms

Algorithms
- Inner and outer set points via two separate, independent control loops
- Control PV sources: Heater filament temperature via Resistance, Reference TC, Wafer TC, chamber compensated filament temperature; can be changed while running
- Model based PID and rate control with 8 programmable control states
  - Power-up
  - Soft start
  - Rate control
  - PID control
  - Manual power
  - Remote power
  - Off
- 2 programmable transition conditions per state

Pedestal Protection Algorithms
- Zone to zone temperature difference reduction and safety shutdown
- Zone to reference temperature difference reduction and safety shutdown
- Over-temp shutdown
- Drives interlock relay
- Over-current shutdown
- Shorted output protection

Resistance to Temperature Methods
- Programmable base resistance and TCR
- 16 point offset table
- Auto-calibration to reference TC wafer (patent pending)

Agency Directive
- UL®/EN 61010-1 Safety Requirements for measurement, control and laboratory equipment

EZ-ZONE® ST

The EZ-ZONE® ST integrated solid state controller from Watlow offers a complete thermal system control solution in a single package. Features include a PID temperature controller connected to a high-amperage solid state relay with the option of adding a properly sized heat sink, an over- and under-temperature limit, a power shut-down contactor and digital communications in one complete and professionally engineered product.

Because the system is modular and scalable, a user only pays for what is needed. Stacking the EZ-ZONE ST integrated controller into multiple configurations enables flexibility to standardize the product platform to solve a wide range of application needs.

This integrated controller also includes 200KA short circuit current rating (SCCR) tested up to 480VAC to minimize damage in the event of a short circuit when used with required fusing.

Features and Benefits

Back panel or DIN-rail mount
- Provides several mounting options

Compact package
- Reduces panel size

Touch-safe package
- Complies with IP2X increasing user safety

±0.1 percent temperature accuracy
- Provides efficient and accurate temperature control

200KA SCCR with proper fusing
- Minimizes damage in the event of a short circuit

Agency approvals: UL®, CSA, CE, RoHS, W.E.E.E.
- Meets applications requiring agency approvals

Three-year warranty
- Ensures Watlow's reliability and product support

Off-the-shelf designed system solution
- Improves system reliability and termination reduction
- Reduces installation cost
- Eliminates incompatibility headaches often encountered with using many different components and brands

Profile capability
- Includes ramp and soak with four files and 40 total steps

Ability to communicate with programmable logic controller (PLC), personal computer (PC) or operator interface terminal (OIT)
- Optional EIA-485 Modbus® RTU
- RUI/communications gateway with optional EIA-232/485 Modbus® RTU, EtherNet/IP™/TCP Modbus®, DeviceNet™ or PROFIBUS DP

EZ-ZONE ST 75 ampere configuration

EZ-ZONE ST 40 ampere full configuration with mechanical contactor

EZ-ZONE ST configuration with only the controller and SSR



Solid state relay output
- Allows faster cycling, more precise control, increased heater life and improves energy efficiency
- Ability to handle up to 75 amperes
- Uses either zero-cross or phase angle control modes for flexibility to control resistive loads such as Nichrome®, tungsten or quartz lamps
- Utilizes phase angle control mode to prevent load failure or blowing fuses for tungsten or quartz loads

PID temperature control
- Allows single input/dual output
- Allows standard PID or adaptive TRU-TUNE+ tuning algorithms for demanding controllability requirements

Optional temperature limit
- Increases safety in over- and under-temperature conditions

Optional definite purpose mechanical contactor
- Enables circuit safety shut down driven by limit control or PID alarm output signal

Optional current monitoring feature
- Detects heater current flow and alarm indication of failed solid state relay (SSR) or heater zone

Optional SSR heat sink
- Sized and engineered for specific applications
- Factory supplied heat sink is UL® listed

System diagnostics
- Provides continuous self-monitoring alerts when there is any system trouble to reduce maintenance and service costs

PC Software—EZ-ZONE Configurator
- Wizard style configuration of controller settings
- Online or offline recipe editing

EZ-ZONE ST

Specifications

Line Voltage/Power
- 100 to 240VAC, +10/-15%; (85-264VAC), 50/60Hz, ±5%
- 24VAC/VDC, +10/-15%; 50/60Hz, ±5%
- 12VA max. power consumption without mechanical contactor in system
- 50VA max. power consumption with mechanical contactor used in system, 140VA if using external contactor
- Data retention upon power failure via nonvolatile memory

Environment
- 0 to 158°F (-18 to 70°C) operating temperature
- -40 to 185°F (-40 to 85°C) storage temperature
- 0 to 90% RH, non-condensing

Accuracy
- Calibration accuracy and sensor conformity: ±0.1% of span, ±1°C @ the calibrated ambient temperature and rated line voltage
  - Types R, S, B: 0.2%
  - Type T below -50°C: 0.2%
- Calibration ambient temperature @ 77°F ±5°F (25°C ±3°C)
- Accuracy span: 1000°F (540°C) min.
- Temperature stability: ±0.1°F/°F (±0.1°C/°C) rise in ambient max.

Agency Approvals
- UL®, CSA, CE (zero cross models only), RoHS, W.E.E.E.
- Limit version features FM approval

Controller
- Microprocessor based user-selectable control modes
- PID module: Single universal input, 2 outputs
- Limit module: Single universal input, 2 outputs
- 2 total additional digital input/outputs shared between PID and limit functions
- Control sampling rates: Input = 10Hz, outputs = 10Hz
- Isolated EIA-485 Modbus® RTU serial communications

Wiring Termination—Touch Safe Terminals
- Input, power and controller output terminals touch safe removable 12 to 22 AWG
- Power load terminals 6 to 12 AWG
  - Tightening torque: 30 in. lbs

Universal Input
- Thermocouple, grounded or ungrounded sensors
  - >20MΩ input impedance
  - Max. of 20Ω source resistance
- RTD 2- or 3-wire, platinum, 100Ω and 1000Ω @ 0°C calibration to DIN curve (0.00385Ω/Ω/°C)
- Process, 0-20mA @ 100Ω, or 0-10VDC @ 20kΩ input impedance; scalable, 0-50mV
- Inverse scaling

Digital Input
- Update rate: 1Hz
- Dry contact or dc voltage
  DC voltage
  - Max. input: 36V at 3mA
  - Min. high state: 3V at 0.25mA
  - Max. low state: 2V

  Dry contact
  - Max. short circuit: 13mA
  - Min. open resistance: 500Ω
  - Max. closed resistance: 100Ω

Current Measurement
- Accuracy: Typical ±1A, max. error ±3A
- Accuracy and operating range: 0 to 75A

Digital Output
- Update rate: 1Hz
- Output voltage: 24V, current limit 10mA

Allowable Operating Range
Type J: 32 to 1500°F or 0 to 815°C
Type K: -328 to 2500°F or -200 to 1370°C
Type T: -328 to 750°F or -200 to 400°C
Type N: 32 to 2372°F or 0 to 1300°C
Type E: -328 to 1470°F or -200 to 800°C
Type C: 32 to 4200°F or 0 to 2315°C
Type D: 32 to 4200°F or 0 to 2315°C
Type F: 32 to 2543°F or 0 to 1395°C
Type R: 32 to 3200°F or 0 to 1760°C
Type S: 32 to 3200°F or 0 to 1760°C
Type B: 32 to 3300°F or 0 to 1816°C
RTD (DIN): -328 to 1472°F or -200 to 800°C
Process: -1999 to 9999 units

Output Hardware
- User selectable for heat/cool as on-off, P, PI, PD, PID, or alarm action. Not valid for limit controls
- Electromechanical relay. Form A, rated 2A
- SSR drive: 20-28VDC low side open collector switch
- SSR, Form A, 0.5A @ 24VAC min., 264VAC max., opto-isolated, without contact suppression
- Electromechanical relay, Form A, rated 5A, auxiliary output on PID module, output 2
- Electromechanical relay, Form C, rated 5A, auxiliary output on limit module, output 3

EZ-ZONE ST

Specifications for Basic Remote User Interface EZKB (RUI)

Operator Interface

- Dual 4 digit, 7 segment LED displays
- Forward, backward, up and down keys plus a customer programmable function key - EZ key
- Typical display update rate: 1Hz
- Agency approved to IP65/NEMA 4X
- Standard bus (ships with all units). Options: EIA-232/485 Modbus® RTU, EtherNet/IP™/TCP Modbus® or DeviceNet™, PROFIBUS DP

Line Voltage/Power

- 100 to 240VAC, +10/-15%; (85-264VAC) 50/60Hz, ±5%
- 24VAC/VDC, +10/-15%; 50/60Hz, ±5%

Specifications for Mechanical Contactor

- Insulation class: UL® Class B 266°F (130°C)
- Min. load of 100 watts
- Duty cycle: Continuous

Contact Ratings

Full Load Amperes	Number of Poles	Line Voltage	Locked Rotor Amps	Resistive Amp Rating	Max. Horsepower	
					Voltage	Single-Phase
40	2	240/277	240	50	120	2
		480	200	50	240	3
		600	160	50		

EZ-ZONE ST Solid State Relay with Heat Sink Specifications

Temperature and SSR Amperage Performance Curve
Watlow 25, 40 and 75 Ampere Solid State Relays

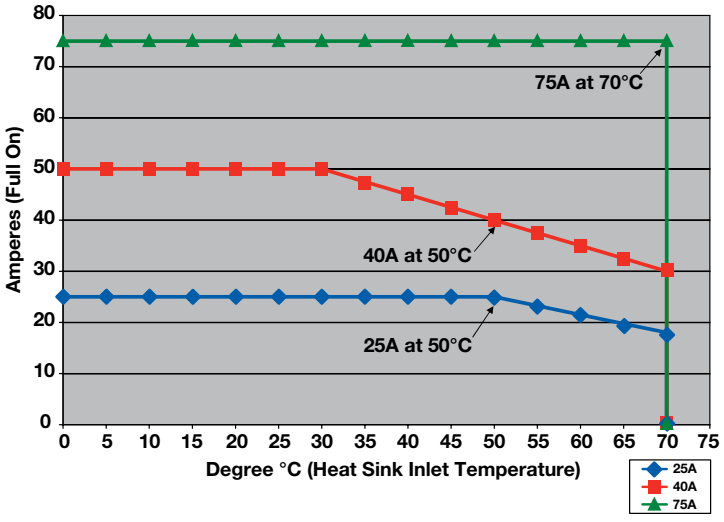

All Versions			
Current output (50°C)	25 Amps	40 Amps	75 Amps
One-cycle surge current	600Apk	850Apk	1350Apk
Max. I^2t for fusing	1500A^2s	3000A^2s	7560A^2s
Thermo resistance	0.35°C/W	0.2°C/W	0.14°C/W
Base plate temperature (max.)	116°C	115°C	112°C
Forward voltage drop	1.3Vpk	1.3Vpk	1.3Vpk
Min. holding current	150mA	150mA	250mA
Frequency	47 to 63Hz	47 to 63Hz	47 to 63Hz

Time Proportioned Models	
Off-state leakage	1mA
Max. off-state dv/dt	500V/µsec
120/240VAC	
Output voltage range	24 to 280VAC
Over voltage rating	600Vpk
Input voltage range	0 to 28VDC
277/600VAC	
Output voltage range	48 to 660VAC
Over voltage range	1200Vpk
Input voltage range	0 to 28VDC

Phase Angle Models	
Off-state leakage	6mA
Max. off-state dv/dt	200V/µsec
120/240VAC	
Output voltage range	100 to 240VAC
Over voltage rating	600Vpk
Input voltage range	2.7 to 10VDC
277/600VAC	
Output voltage range	260 to 600VAC
Over voltage range	1200Vpk
Input voltage range	2.8 to 10VDC

EZ-ZONE ST

RUI (EZKB) Utilized as a Communication Gateway Device

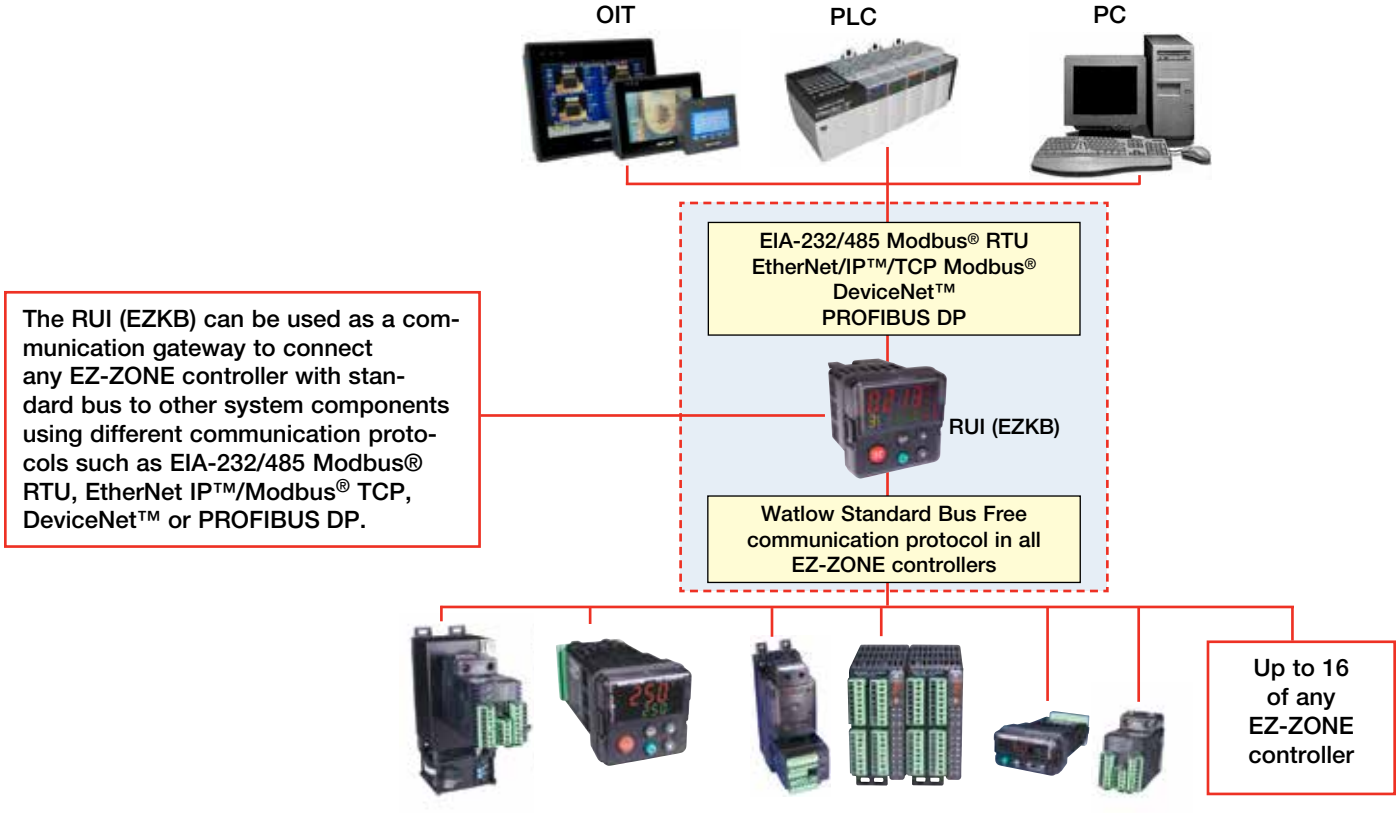

EZ-ZONE ST with Definite Purpose Mechanical Contactor—Dimensional Drawing

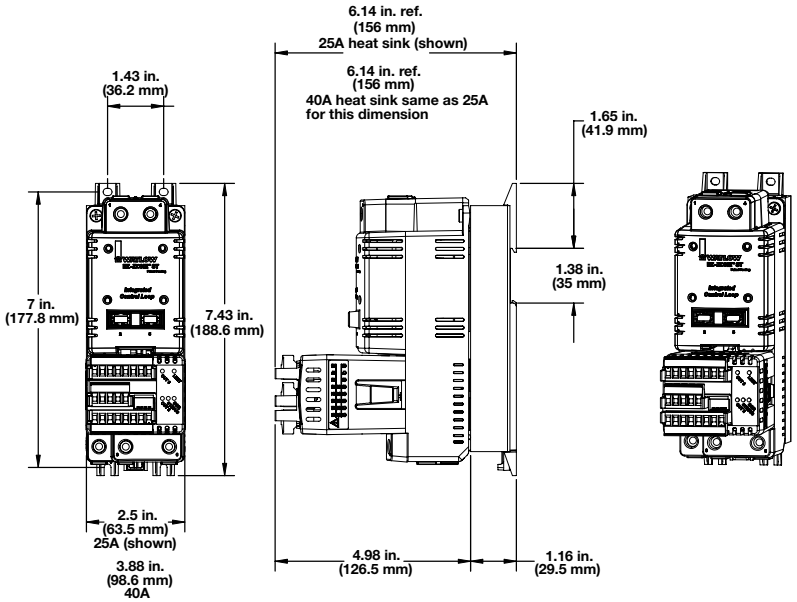

Note: EZ-ZONE ST must be mounted vertically (as shown) to meet amp/ambient performance curve.

EZ-ZONE ST

EZ-ZONE ST with 25 or 40A Heat Sink, without Definite Purpose Mechanical Contactor—Dimensional Drawing

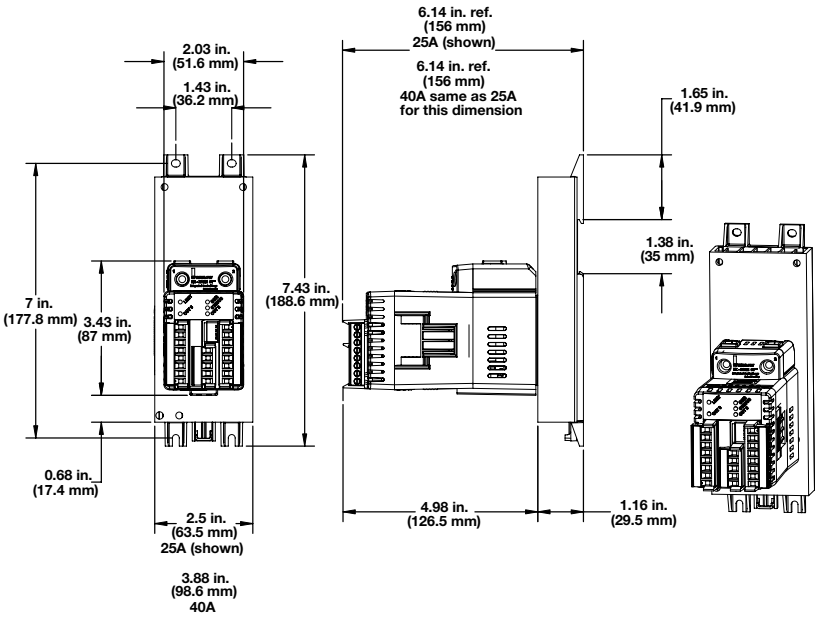

Note: EZ-ZONE ST must be mounted vertically (as shown) to meet amp/ambient performance curve.

EZ-ZONE ST with 75A Heat Sink, without Definite Purpose Mechanical Contactor—Dimensional Drawing

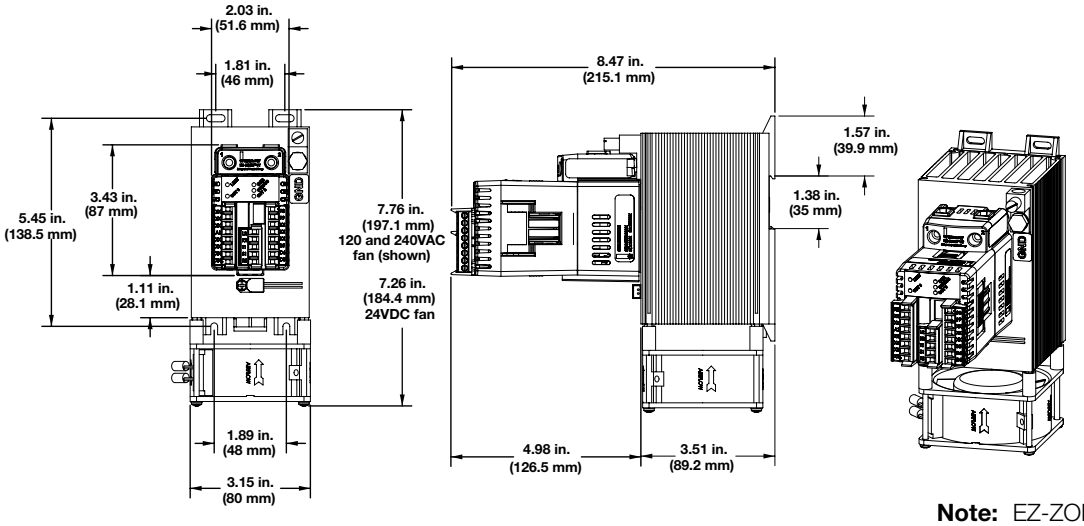

Note: EZ-ZONE ST must be mounted vertically (as shown) to meet amp/ambient performance curve.

EZ-ZONE ST

Communications

Selecting the right communications ordering option for the EZ-ZONE ST:



Correct Ordering Option Letter	Connecting To	Another EZ-ZONE Product	RUI, EZ-ZONE Configurator, SpecView	Third Party Device (PLC, PC, Touch Panel, etc.)	Silver Series Operator Interface Terminal
Option A*	→		Yes		
Option M**				Yes - Via Modbus®	Yes - Via Modbus®
Option A*		Yes	Yes		
Option M**		Yes		Yes - Via Modbus®	Yes - Via Modbus®

*A = Standard bus used to connect to Watlow PC software, RUI, other EZ-ZONEs

**M = Modbus® RTU (needed to communicate to third-party devices) and standard bus. User selectable

Ordering Information

Part Number

① ②	③	④	⑤ ⑥	⑦	⑧	⑨	⑩	⑪ ⑫
	Integrated PID Controller	Integrated Limit Controller	Mech. Cont. & Pwr. Supply	Comm.	SSR	Heat Sink/DIN-Rail Mtg.	Firmware	Custom-ization
ST								

③ Integrated PID Controller

	Output 1*	Output 2	Total of 2 Digital I/O Points	Current Measurement
K =	SSR drive	0.5A SSR	No	No
B =	SSR drive	0.5A SSR	Yes	No
P =	SSR drive	0.5A SSR	No	Yes
E =	SSR drive	0.5A SSR	Yes	Yes
H =	SSR drive	5A mechanical relay	No	No
D =	SSR drive	5A mechanical relay	Yes	No
J =	SSR drive	5A mechanical relay	No	Yes
C =	SSR drive	5A mechanical relay	Yes	Yes

* Output 1 is dedicated to providing the command signal to the internal SSR.

Note: If 75A heat sink is selected below, then 1 digital I/O will be factory set and fixed as the SSR over-temperature digital input.

④ Integrated Limit Controller

A =	None
L =	Limit control module with output 3, 5A Form C mechanical relay; with output 4, 2A Form A mechanical relay
B =	No limit control module but access to coil connection on mechanical contactor

⑤ ⑥ Mechanical Contactor and Power Supply Options

AH =	No contactor and universal high voltage power supply 100-240VAC/VDC
AL =	No contactor and universal low voltage power supply 24- 28VAC/VDC
B1 =	Single pole, 40A Watlow contactor, 24VAC power supply
B2 =	Single pole, 40A Watlow contactor, 110/120VAC power supply
B3 =	Single pole, 40A Watlow contactor, 208/240VAC power supply
F1 =	Dual pole, 40A Watlow contactor, 24VAC power supply
F2 =	Dual pole, 40A Watlow contactor, 110/120VAC power supply
F3 =	Dual pole, 40A Watlow contactor, 208/240VAC power supply

⑦ Communications

A =	Standard bus used to connect to Watlow PC software, RUI, other EZ-ZONEs
M =	485 Modbus® RTU (needed to communicate to third-party devices) and standard bus; user selectable

⑧ SSR

B =	Zero cross 10A (24 to 240VAC output)
C =	Zero cross 25A (24 to 240VAC output)
D =	Zero cross 40A (24 to 240VAC output
E =	Zero cross 50A (24 to 240VAC output
K =	Zero cross 75A (24 to 240VAC output)
F =	Zero cross 90A (24 to 240VAC output)
G =	Zero cross 25A (48 to 600VAC output)
H =	Zero cross 40A (48 to 600VAC output)
L =	Zero cross 75A (48 to 600VAC output)
J =	Zero cross 90A (48 to 600VAC output)
M =	Phase angle 25A (100 to 240VAC output)
N =	Phase angle 40A (100 to 240VAC output)
P =	Phase angle 75A (100 to 240VAC output)
R =	Phase angle 25A (260 to 600VAC output)
S =	Phase angle 40A (260 to 600VAC output)
T =	Phase angle 75A (260 to 600VAC output)

Note: EZ-ZONE ST phase angle is designed to work with tungsten or quartz loads. The EZ-ZONE ST should not be used with globars, molybdenum, graphite or transformer loads.

⑨ Heat Sinks/DIN-Rail Mounting Bracket

A =	None
B =	25A
C =	40A
D =	75A 24VDC fan cooled
E =	75A 115VAC fan cooled
F =	75A 240VAC fan cooled

Note: If heat sink option D, E or F is selected you must also order integrated PID controller options B, E, D or C. 75A heat sink option includes SSR over-temperature thermostat shut-down feature.

⑩ Firmware

A =	Standard Watlow
P =	Profile ramp and soak (40 total steps, 1 to 4 profiles total)
S =	Custom

⑪ ⑫ Customization (logo, parameters, hardware, firmware)

AA =	Standard
XX =	Letters to be determined, contact factory

Note: Maximum rating of final configured product is determined by the lowest component rating of either the mechanical contactor, solid-state relay or heat sink. Maximum UL® rating for product is 75A.

EZ-ZONE ST

Remote User Interface (RUI)— Dimensional Drawings

Front View

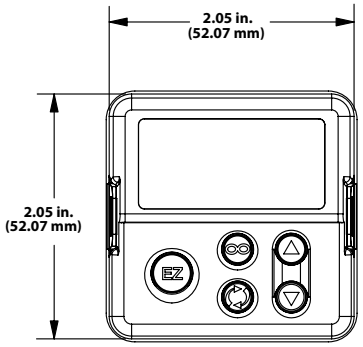

Short Case Version

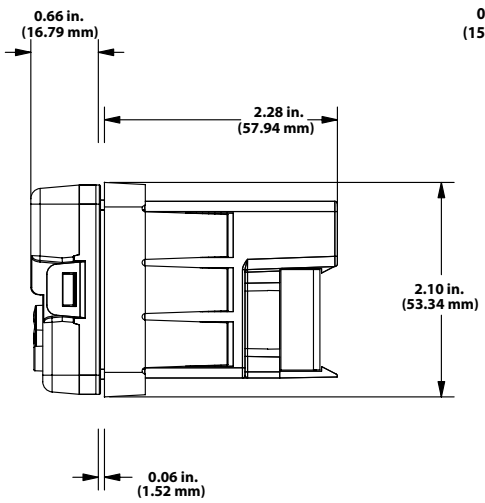

Long Case Version

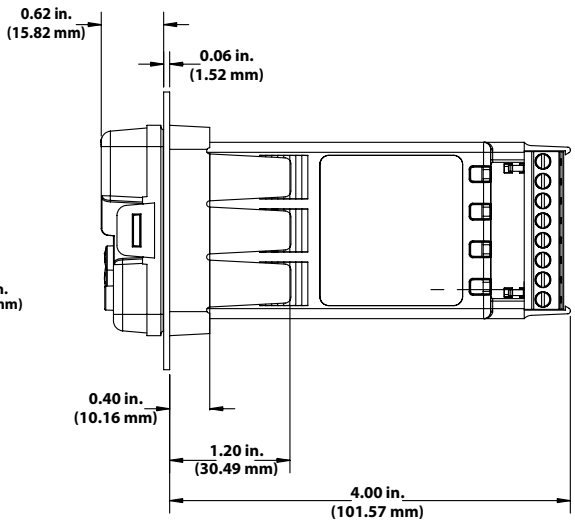

Ordering Information

Part Number

① ② ③	④ Remote User Interface	⑤ Power Supply Voltage for RUI	⑥ Comm. Gateway Options	⑦ ⑧ Custom RUI	⑨ ⑩ Future Options	⑪ ⑫ Custom Options
EZK					AA	

④	Remote User Interface (RUI)
B =	Basic 1/16 DIN

⑤	Power Supply Voltage for RUI
L =	Low voltage 24-28VAC/VDC
H =	Universal high voltage 100-240VAC/VDC

⑥	Communication Gateway Options* (Standard Bus Always Included)
A =	None
2 =	EIA 232/485 Modbus® RTU
3 =	EtherNet/IP™/Modbus® TCP
5 =	DeviceNet™
6 =	PROFIBUS DP
*Options 2 through 6 require the long case dimensions	

⑦ ⑧	Custom RUI
AA =	None
12 =	Custom options, contact factory

⑪ ⑫	Custom Options
AA =	None
XX =	Class 1, Div. 2 (only available with communication options 2, 3, 5 and 6)

Compatible Accessories



The EZ-ZONE configurator software is used to set up Watlow EZ-ZONE products in one simple process. It works without requiring the purchase of any communication options because it uses the standard bus communications protocol that is included with all EZ-ZONE products. EZ-ZONE configurator can be used for online and offline configurations and downloading previously saved setups. It is available as a FREE download at www.watlow.com.



SpecView is designed for industrial users with features such as data logging, trending and support for bar code readers and touch screens. Errors are reduced, for any process, by creating application-specific screens. The software provides a historical replay option, easy-to-use recipe features and remote access options, including LAN, Internet and modem.



Silver Series EM touch screen operator interface terminals provide a customizable user interface, email event notifications and log and graph data for Watlow controllers and other devices. A Silver Series EM operator interface teminal paired with Watlow controllers is the perfect solution for your industrial process or machine control application.

SERIES EHG® SL10

The SERIES EHG® SL10 integrated, multi-function controller is a key component to a powerful system that includes a heater, an adjustable set point temperature controller, a high/low temperature alert, a power switching device and a high temperature safety limit. Its agency recognized controller/safety limit meets UL® 1998 and CE 60730 requirements.

An optional display/communications module can be easily added in the field to provide a digital display indication, an adjustment of set point, RS-485 Modbus® communications and other Human Machine Interface (HMI) features. As a scalable system, only what is needed can be purchased.

The EHG SL10 controllers' easy to install, compact design, inherent reliability and integrated limit functions offer unmatched value. It is designed for easy integration with Watlow heaters to simplify engineering, reduce component count for new equipment and decrease ownership cost. For original equipment manufacturers (OEMs), the EHG SL10 controller's CE, Semi-S2 compliance and UL® recognition reduces time and costs associated with global agency testing and validation. U.S. Patent Number 8,044,329.

Features and Benefits

Process controller and safety limit in one package
- Meets UL® 1998 and CE 60730 requirements
- Eliminates the need for a thermal fuse on a heater
- Eliminates replacement of heater when fuse fails

Optional display/communications module
- Allows easy upgrade on to base device
- Offers low cost field upgrade
- Provides easy, snap-on installation

Accurate and flexible temperature process controller
- Replaces problematic bi-metal thermostats with accurate electronic temperature process controller
- Allows easy change of process parameters

Ambient operating temperature range 32 to 158°F (0 to 70°C)
- Increases reliability when mounting in harsh temperature environments or in close proximity to heaters

Integrated high/low temperature alert signal relay
- Provides dry contact output to activate external alarm or process function
- Signals control status with three integrated LEDs
- Allows a signal of up to two amperes 30VAC/VDC, Form A to alert if process temperature is out of range limits



Health check diagnostics
- Monitors maximum heater process temperature, maximum ambient temperature and thermocouple operation
- Provides health check signal to inform operator that the process is working correctly

Universal power supply
- Allows an input of 85 to 264VAC, 50/60Hz
- Provides safe control of up to 2400 watts with 10 amperes switching in both controller and safety limit

Can be switched from on-off and PID algorithm
- Increases product life (on-off control is default)
- Offers selectable PID control algorithm for tighter temperature uniformity

Universal ⅛ turn mounting bracket
- Allows mounting to most surfaces
- Provides flexible mounting—either horizontally or vertically

Typical Applications

Semiconductor processing
- Gas delivery lines
- Exhaust lines

Life sciences
- Laboratory equipment
- Medical equipment

Foodservice equipment
- Warming and serving equipment
- Food holding cabinets

Packaging
- Heat sealing bars
- Hot glue application equipment

SERIES EHG SL10

Specifications

Operational

- Two, Type K thermocouple inputs - process temperature control and safety limit
- Process temperature output - 10A NO-ARC relay
- Safety limit alarm - 10A relay
- High/low temperature alert - 2A 30VAC/VDC, Form A (single pole, normally open contact)
- On-off temperature controller algorithm, upgraded via communications to PID algorithm (min. cycle time 30 seconds)

Standard Molex® connectors

- Controllers are integral to the heater and are supplied by Watlow

Power

- Isolated universal power supply 85 to 264VAC, 50/60Hz
- Up to 2400 W with 10A switching capability

NO-ARC Relay

- 10A switching
- 4.5 million cycles

Environmental

- Ambient operating temperature range 32 to 158°F (0 to 70°C)

Agency Approvals

- UL® 1998/ C-UL®
- CE 60730
- Semi-S2

SERIES EHG Versus Thermostat (typical application)

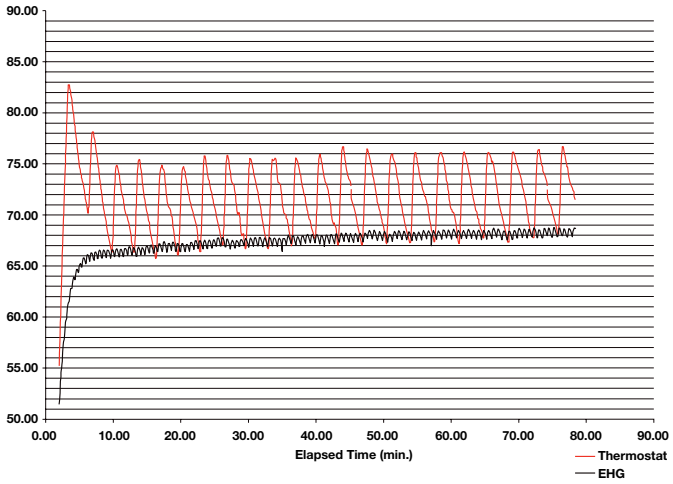

Dimensions

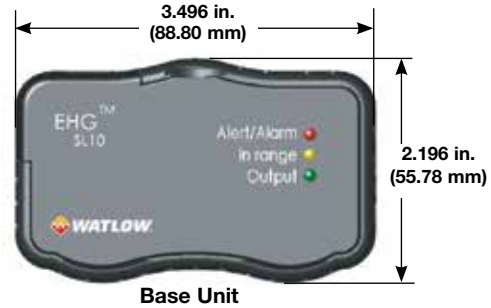

Base Unit



Without Optional Module



With Optional Module

Switching Device Comparison Chart

	T-Stat	Solid State Relay	Watlow NO-ARC Relay
Amperage at 77°F (25°C)	10A	10A	10A
Amperage at 158°F (70°C)	10A	De-rate significantly and add heat sink and air cooling	10A
Output device life at 10A	Rated 100,000 at 158°F (70°C)	Greater than 10 million cycles at 77°F (25°C)	Greater than 4.5 million cycles at 158°F (70°C)

SERIES EHG SL10

EHG SL10 Software

With the addition of an optional communication module, the EHG SL10 can be managed, monitored and manipulated via software. Change set points, label devices, change tuning parameters, check health status and much more all with the click of a key.





Reduces System Complexity and Cost

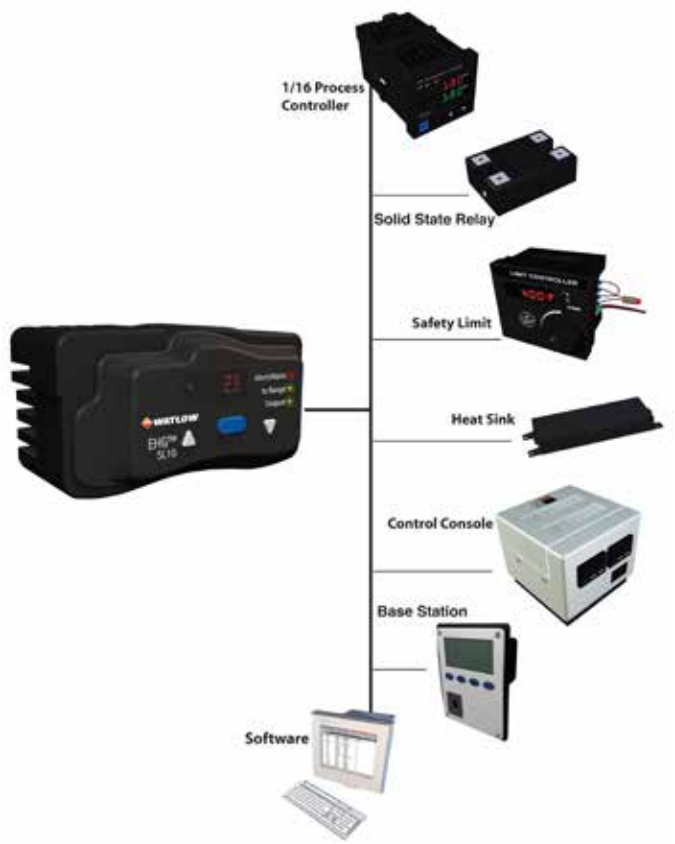

Mounting Bracket

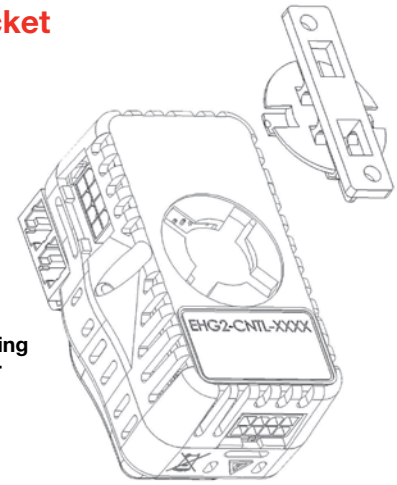

The EHG SL10 mounting enables the controller to be mounted in four angles.



The EHG SL10 can be "daisy-chained" for gas line and other assemblies.

SERIES EHG SL10

Optional Upgrade Modules

These upgrade modules are easy to install. There is no need to reconfigure, rewire or reorder the base unit. A technician is not needed for the installation, resulting in a seamless, cost-efficient system that can be upgraded.

	Diagnostics Memory Control Parameters	Ability to Change Temperature Parameters	Field Adjustable Set Point	3-Digit 7-Segment LED Display Illuminated	Diagnostic LEDs	User Interface Software	Modbus® RTU Communication	RS-485
Base Unit 	✓	✓			✓			
Optional Display Module 	✓	✓	✓	✓	✓			
Optional Communication Module 	✓	✓	✓		✓	✓	✓	
Optional Display and Communication Module 	✓	✓	✓	✓	✓	✓	✓	

Ordering Information

Part Number

① ② ③ ④ ⑤ ⑥	⑦ ⑧ ⑨
265 EG2	Base/ Module

⑦ ⑧ ⑨	Base/Module
001 =	Base unit
007 =	Display module
008 =	Communications module
002 =	Display with communications module

Additional cables for wiring parallel heater circuits (daisy-chaining) in gas line and other assemblies

4800-0012 - Long cable
4800-0022 - Long terminating cable
4800-0011 - Short cable
4800-0021 - Short terminating cable

Compatible Accessories

Operator Interface Terminals (OIT)



Silver Series EM touchscreen operator interface terminals provide a customizable user interface, email event notifications and log and graph data for Watlow controllers and other devices. A Silver Series EM operator interface terminal paired with Watlow controllers is the perfect solution for industrial processes or machine control applications.

SERIES EHG

Many applications requiring a fixed temperature set point rely on a mechanical thermostat for thermal control. Thermostats have proven, however, to be inadequate for many applications due to long-term reliability issues, such as 100,000 cycle rating and poor temperature control.

The SERIES EHG thermal solution includes a compact temperature control, thermocouple sensor and power switching device integrated into the heater's power cord. The SERIES EHG reduces system costs and lasts substantially longer than a conventional thermostat solution.

The evolution of miniature microprocessor technology and Watlow switching technology fostered development of a small, versatile temperature control and thermocouple sensor that is integrated with Watlow silicone rubber heater products. This device senses the temperature via input from a thermocouple strategically placed on the heater mat. The microprocessor is programmed prior to shipment with an application specific set point. This results in quick delivery of a custom, integrated system.

The small thermocouple mass provides superior response to changes in process temperature enabling higher watt density silicone rubber heater designs. These features offer an integrated custom set point temperature controller with superior life span, faster heat-up rates and improved accuracy. The SERIES EHG system has been tested to over four million cycles at rated amperage. Depending on the application, Watlow's power switching design can last up to 40 times longer than a conventional thermostat.



Features and Benefits

Long operational life
- Improves system reliability

Tight temperature control
- Ensures process accuracy

Small sensor footprint
- Fits with almost any heater
- Responds quickly to temperature changes
- Controls high watt densities in low mass applications

Reduced system cost
- A single EHG control can be configured with multiple heaters

Pre-wired, in line control
- Simplifies installation
- Two wire power connection

Durable housing with built-in strain relief
- Protects electronics
- Low risk of mechanical damage

Manufactured with proven Watlow components
- Assures reliable system performance

Typical Applications

- Semiconductor processing
- Aerospace composite repair
- Foodservice equipment
- Freeze protection
- Medical/Clinical/Analytical
- Telecommunications

SERIES EHG

Specifications

Operational

- SERIES EHG silicone rubber heater UL® recognized to 428°F (220°C) operating temperature
- Factory programmed fixed set point
- On-off control with 6°F (3°C) switching hysteresis
- Temperature band LED indicator ON between -68 and +68°F (–20 and +20°C) of set point

Electrical

- Voltage rating: 120 or 240VAC – 30/+10%, 50/60Hz
- Silicone rubber heater watt densities up to 80 W/in² (12.5 W/cm²) dependent on application temperature
- SERIES EHG system UL® recognized to 10A max.

Sensor

- Type K thermocouple

Mechanical

- Control dimensions 3.75 in. (95 mm) long by 1.75 in. (45 mm) diameter
- Heater per silicone rubber heater specifications

Agencies

- Silicone rubber heater: UL® recognized File #E52951
- SERIES EHG control: TUV File DE 3-3068 to EN 61010-1:2001, UL® File E43684 to UL® 873 temperature indicating and regulating equipment

Environmental

- Control operating temperature range 32 to 158°F (0 to 70°C)
- Control storage temperature range -40 to 158°F (–40 to 70°C)

Contact your Watlow representative for custom configurations.

SERIES EHG Versus Thermostat (typical application)

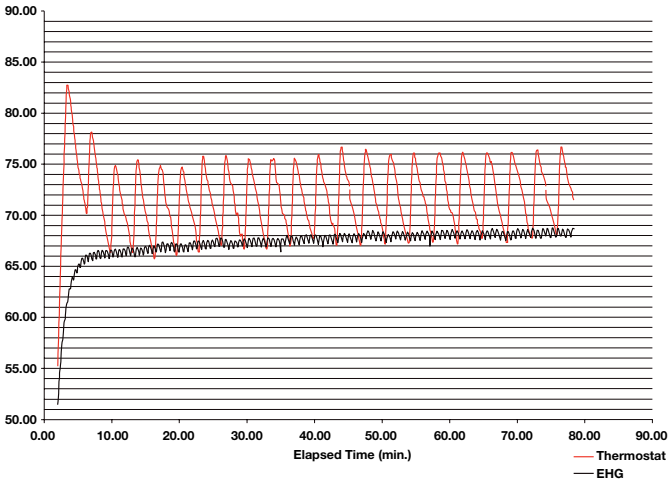

Dimensions

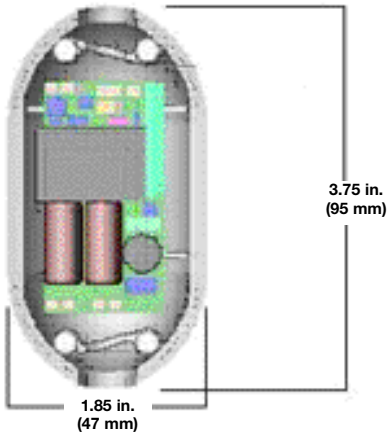

Integrated SERIES EHG System Versus Integrated Thermostat System

	Integrated EHG System	Integrated Thermostat System	SERIES EHG Benefit
Life comparison at rated amperage 10A load	Tested to greater than 4,000,000 cycles with	Rated 100,000 cycles	Longer product life of SERIES EHG system and high application reliability
Switch hysteresis	6°F (3°C)	15°F (8°C)	Provides superior process control
Improved response time reduces overshoot on start-up	6°F (3°C) typical	25°F (14°C) typical	Responds to temperature changes faster than a thermostat
Warranty	Two years for material and workmanship	One year on material and workmanship	Warranty can be extended due to longer life cycle
Zero cross switching	SERIES EHG has zero cross switching	Random switching during sign wave cycle	Reduces the possibility of electrical mechanical interference (EMI)

SERIES CF

Watlow's family of microprocessor-based temperature controllers offers an economical solution for applications that require simple, on-off control. Controllers are available in a broad range of packaging options, allowing selection of the best version for a specific application. They are available with or without an indicating display and can be ordered in a 1/8 DIN square panel mount, DIN-rail mount or open board design configuration.

The SERIES CF temperature controller incorporates a microprocessor design that delivers the repeatability, accuracy and performance advantages you can count on from Watlow's basic temperature controllers. Fixed set points are available and an indicating display is an option. Operating set point temperature values can be specified in the product configuration part number.

SERIES CF controllers are UL® and C-UL® listed and carry CSA and CE approvals. Watlow's temperature controllers include industry-leading service and support and are protected by a three-year warranty.



Features and Benefits

Fixed set points
- Provides tamper-proof operation

Multiple mounting options
- Minimizes installation time

Heat or cool operation
- Provides application flexibility

Fahrenheit or Celsius operation with indication
- Offers application flexibility

Agency approvals
- Meets certification requirements/compliance

Microprocessor based technology
- Ensures accurate repeatable control

SERIES CF

Specifications

On-Off Controller
- Microprocessor based, on-off control mode
- Nominal switching hysteresis, typically 3°F (1.7°C)
- Input filter time: 1 second

Operator Interface
- 4-digit, 7-segment LED displays, 0.28 in. (7 mm) high non-condensing, 15-minute warm-up
- °F or °C indicator LED

Standard Conditions For Specifications
- Rated line voltage, 50 to 60Hz, 0 to 90%, RH, non-condensing, 15-minute warm-up
- Calibration ambient range: 77°F (25°C) ±3°C

Sensor Input
Thermocouple
- Grounded or ungrounded
- Type E, J, K or T thermocouple
- >10 MΩ input impedance
- 250 nV input referenced error per 1Ω source resistance

RTD
- 2-wire platinum, 100Ω
- DIN-curve (0.00385 curve)
- 125 µA nominal RTD excitation current

Input Accuracy Span Range

Type E:	-328	to 1470°F	(-200	to	800°C)
Type J:	32	to 1382°F	(0	to	750°C)
Type K:	-328	to 2282°F	(-200	to	1250°C)
Type T:	-328	to 662°F	(-200	to	350°C)
RTD (DIN)	-328	to 1472°F	(-200	to	800°C)

Thermocouple Input
- Calibration accuracy: ±1% of input accuracy span, ±1° at standard conditions and actual calibration ambient. Exception: Type T, ±2.4% of input accuracy span for -328 to 32°F (-200 to 0°C)
- Temperature stability: ±0.3 degree per degree change in ambient

RTD Input
- Calibration accuracy ±1% of input accuracy span ±1° at standard conditions and actual calibration ambient
- Temperature stability: ±0.2 degree per degree change in ambient

Allowable Operating Ranges

Type E:	-328	to 1470°F	(-200	to	800°C)
Type J:	-346	to 1900°F	(-210	to	1038°C)
Type K:	-454	to 2500°F	(-270	to	1370°C)
Type T:	-454	to 750°F	(-270	to	400°C)
RTD (DIN)	-328	to 1472°F	(-200	to	800°C)

Output Types
Switched dc (non-isolated)
- Supply voltage max.: 24VDC into an infinite load
- Supply voltage min.: 5VDC at 10mA
- Min. load impedance: 500Ω

Electromechanical Relay, Form C
- Min. load current: 100mA
- 8A @ 240VAC or 30VDC max., resistive
- 250VA pilot duty, 120/240VAC max., inductive
- Use RC suppression for inductive loads
- Electrical life 100,000 cycles at rated current

Agency Approvals
- UL® 60730-1 Recognized Temperature Controller and Indicator on potted models
- UL® 197 Reviewed for Use in Cooking Appliances
- UL® 873
- ANSI Z21.23 Gas Appliance Thermostat Approval
- Temperature Control and Indicator CSA 22.2 No. 24

Terminals
- 0.25 in. (6.3 mm) quick connect, push on terminal or removable screw style terminal block

Power
- 24VAC +10%; -15%; 50/60Hz, ±5%
- 120VAC +10%; -15%; 50/60Hz, ±5%
- 230 to 240VAC +10%; -15%; 50/60Hz, ±5%
- 10VA max. power consumption
- Data retention upon power failure via nonvolatile memory

Operating Environment
- 32 to 158°F (0 to 70°C)
- 0 to 90% RH, non-condensing
- Storage temperature: -40 to 185°F (-40 to 85°C)

Dimensions
- DIN-rail model can be DIN-rail or chassis mount DIN-rail spec DIN 50022, 1.38 in. x 0.30 in. (35 mm x 7.5 mm)

Style	Width	Height	Depth
Open Board	2.43 in. (61.7 mm)	2.43 in. (61.7 mm)	1.78 in. (45.1 mm)
Potted	2.76 in. (70.1 mm)	4.05 in. (102.9 mm)	1.84 in. (46.6 mm)
DIN-rail	3.08 in. (78.1 mm)	4.42 in. (112.3 mm)	3.57 in. (90.7 mm)
Square ⅛ DIN-panel	2.85 in. (72.4 mm)	2.85 in. (72.4 mm)	Behind panel 2.04 in. (51.7 mm)

SERIES CF

Ordering Information

On-off controller, fixed set point, no user interface

Part Number

① ②	③ Power Supply	④ Package	⑤ Sensor Type and Scale	⑥ Control Type	⑦⑧⑨⑩ Fixed Set Point Temp. Value	⑪⑫⑬⑭	⑮ Overlay/ Customs Options
CF						AAAA	

③	Power Supply
B =	120VAC, switched dc output
C =	120VAC, 8A relay output
D =	230 to 240VAC, switched dc output
E =	230 to 240VAC, 8A relay output
F =	24VAC, switched dc output
G =	24VAC, 8A relay output

④	Package
1 =	Panel mount square ⅛ DIN - spade terminals
2 =	DIN-rail mount - spade terminals
3 =	Open board, non potted - spade terminals
4 =	Potted case - spade terminals
5 =	Panel mount square ⅛ DIN - screw terminals
6 =	DIN-rail mount - screw terminals
7 =	Open board, non potted - screw terminals

⑤	Sensor Type and Scale
H =	T/C Type J Fahrenheit (-346 to 1900°F)
J =	T/C Type J Celsius (-210 to 1038°C)
K =	T/C Type K Fahrenheit (-454 to 2500°F)
L =	T/C Type K Celsius (-270 to 1370°F)
M =	T/C Type T Fahrenheit (-454 to 750°F)
N =	T/C Type T Celsius (-270 to 400°F)
P =	RTD Fahrenheit (-328 to 1472°F)
R =	RTD Celsius (-200 to 800°C)
S =	T/C Type E Fahrenheit (-328 to 1470°F)
T =	T/C Type E Celsius (-200 to 800°C)

⑥	Control Type
H =	Heat
C =	Cool

⑦⑧⑨⑩	Fixed Set Point Temperature Value
Note: A (-) is used in the left most digit of the set point operating ranges to indicate a negative temperature value.	

⑮	Overlay/Customs Options
A =	Standard with Watlow logo
1 =	Standard without Watlow logo

SERIES CV

Watlow's family of microprocessor-based temperature controllers offers an economical solution for applications that require simple, on/off control. Controllers are available in a broad range of packaging options, allowing selection of the best version for a specific application. They are available with an operator interface and can be ordered in a 1/8 DIN square panel mount or DIN-rail mount configuration.

The SERIES CV temperature controller incorporates a microprocessor design that delivers the repeatability, accuracy and performance advantages you can count on from Watlow's basic temperature controllers.

The SERIES CV controller includes an operator interface for viewing and set point selection. A red, four-character, seven segment LED displays the set point to show process options. The set point selection is made with a continuous turn, rotary encoder. Operating range temperature values are user definable as specified in the product configuration part number.

SERIES CV controllers are UL® and C-UL® listed and carry CSA and CE approvals. Watlow's temperature controllers include industry-leading service and support and are protected by a three-year warranty.



Features and Benefits

Adjustable set points
- Offers control flexibility

Four character LED display
- Improves set point selection accuracy

Multiple mounting options
- Minimizes installation time

Heat or cool operation
- Provides application flexibility

Fahrenheit or Celsius operation with indication
- Offers application flexibility

Agency approvals
- Meets certification requirements/compliance

Microprocessor based technology
- Ensures accurate repeatable control

SERIES CV

Specifications

On-Off Controller

- Microprocessor based, on-off control mode
- Nominal switching hysteresis, typically 3°F (1.7°C)
- Input filter time: 1 second

Operator Interface

- 4 digit, 7 segment LED displays, 0.28 in. (7 mm) high
- °F or °C indicator LED
- Load indicator LED
- Continuous turn, velocity sensitive rotary encoder for set point adjustment
- Front panel key push for set point or push for show process options

Standard Conditions For Specifications

- Rated line voltage, 50 to 60Hz, 0 to 90%, RH, non-condensing, 15-minute warm-up
- Calibration ambient range: 77°F (25°C) ±3°C

Sensor Input Thermocouple

- Grounded or ungrounded
- Type E, J, K or T thermocouple
- >10 MΩ input impedance
- 250 nV input referenced error per 1Ω source resistance

RTD

- 2-wire platinum, 100Ω
- DIN-curve (0.00385 curve)
- 125 µA nominal RTD excitation current

Input Accuracy Span Range

Type E:	-328	to	1470°F	(-200	to	800°C)
Type J:	32	to	1382°F	(0	to	750°C)
Type K:	-328	to	2282°F	(-200	to	1250°C)
Type T:	-328	to	662°F	(-200	to	350°C)
RTD (DIN)	-328	to	1472°F	(-200	to	800°C)

Thermocouple Input

- Calibration accuracy: ±1% of input accuracy span, ±1° at standard conditions and actual calibration ambient. Exception: Type T, ±2.4% of input accuracy span for -328 to 32°F (-200 to 0°C)
- Temperature stability: ±0.3 degree per degree change in ambient

RTD Input

- Calibration accuracy ±1% of input accuracy span ±1° at standard conditions and actual calibration ambient
- Temperature stability: ±0.2 degree per degree change in ambient

Allowable Operating Ranges

Type E:	-328	to	1470°F	(-200	to	800°C)
Type J:	-346	to	1900°F	(-210	to	1038°C)
Type K:	-454	to	2500°F	(-270	to	1370°C)
Type T:	-454	to	750°F	(-270	to	400°C)
RTD (DIN)	-328	to	1472°F	(-200	to	800°C)

Output Types

Switched dc (non-isolated)

- Supply voltage max.: 24VDC into an infinite load
- Supply voltage min.: 5VDC at 10mA
- Min. load impedance: 500Ω

Electromechanical Relay, Form C

- Min. load current: 100mA
- 8A @ 240VAC or 30VDC max., resistive
- 250VA pilot duty, 120/240VAC max., inductive
- Use RC suppression for inductive loads
- Electrical life 100,000 cycles at rated current

Agency Approvals

- UL® 60730-1 Recognized Temperature Controller and Indicator on potted models
- UL® 50 IP65 - tactile key models
- UL® 197 Reviewed for Use in Cooking Appliances
- UL®873
- ANSI Z21.23 Gas Appliance Thermostat Approval
- Temperature Control and Indicator CSA 22.2 No. 24

Terminals

- 0.25 in. (6.3 mm) quick connect, push on terminal or removable screw style terminal block

Power

- 24VAC +10%; -15%; 50/60Hz, ±5%
- 120VAC +10%; -15%; 50/60Hz, ±5%
- 230 to 240VAC +10%; -15%; 50/60Hz, ±5%
- 10VA max. power consumption
- Data retention upon power failure via nonvolatile memory

Operating Environment

- 32 to 158°F (0 to 70°C)
- 0 to 90% RH, non-condensing
- Storage temperature: -40 to 185°F (-40 to 85°C)

Dimensions

- DIN-rail model can be DIN-rail or chassis mount DIN-rail spec DIN 50022, 1.38 in. x 0.30 in. (35 mm x 7.5 mm)

SERIES CV

Ordering Information

On-off controller, rotary set point adjustment, 4 character, 7 segment display

Part Number

① ②	③ Power Supply	④ Package	⑤ Sensor Type and Scale	⑥ Control Type	⑦ ⑧ ⑨ ⑩ Low Set Point Operating Range Value	⑪ ⑫ ⑬ ⑭ High Set Point Operating Range Value	⑮ Overlay/ Customs Options
CV							

③	Power Supply
B =	120VAC, switched dc output
C =	120VAC, 8A relay output
D =	230 to 240VAC, switched dc output
E =	230 to 240VAC, 8A relay output
F =	24VAC, switched dc output
G =	24VAC, 8A relay output

④	Package
1 =	Panel mount square 1/8 DIN - spade terminals
2 =	DIN-rail mount - spade terminals
5 =	Panel mount square 1/8 DIN - screw terminals
6 =	DIN-rail mount - screw terminals
A =	NEMA 4X panel mount, tactile keys (spade terminals)
B =	DIN-rail mount, tactile keys (spade terminals)
C =	NEMA 4X panel mount, tactile keys (screw terminals)
D =	DIN-rail mount, tactile keys (screw terminals)

⑤	Sensor Type and Scale
H =	T/C Type J Fahrenheit (-346 to 1900°F)
J =	T/C Type J Celsius (-210 to 1038°C)
K =	T/C Type K Fahrenheit (-454 to 2500°F)
L =	T/C Type K Celsius (-270 to 1370°C)
M =	T/C Type T Fahrenheit (-454 to 750°F)
N =	T/C Type T Celsius (-270 to 400°C)
P =	RTD Fahrenheit (-328 to 1472°F)
R =	RTD Celsius (-200 to 800°C)
S =	T/C Type E Fahrenheit (-328 to 1470°F)
T =	T/C Type E Celsius (-200 to 800°C)

⑥	Control Type
H =	Heat
C =	Cool

⑦⑧⑨⑩ Low Set Point Operating Range Value
Note: A (-) is used in the left most digit of the set point operating ranges to indicate a negative temperature value.

⑪⑫⑬⑭ High Set Point Operating Range Value
Note: A (-) is used in the left most digit of the set point operating ranges to indicate a negative temperature value.

⑮	Overlay/Customs Options
A =	Standard with Watlow logo
B =	Push to show process with Watlow logo
C =	Push to adjust set point with Watlow logo
D =	Show process push to adjust set point with Watlow logo
1 =	Standard without Watlow logo
2 =	Push to show process without Watlow logo
3 =	Push to adjust set point without Watlow logo
4 =	Show process push to adjust set point without Watlow logo

ASPYRE® DT

Watlow's ASPYRE® DT power controller family is flexible and scalable, and available with a variety of options allowing one platform to be re-used across a wide range of applications, which can help save time and money. ASPYRE DT models available include sizes from 35 to 2100 amps.

This power controller family features multiple advanced microprocessor-based firing and control mode algorithms. Combined with diagnostics and several communications options the product enables equipment and factory automation.

Controller firing modes include zero cross, burst firing, single cycle, delayed triggering and phase angle. These smart algorithms enable the product to easily control a wide base of heater loads including nichrome, moly, silicon carbide, tungsten quartz and infrared lamps and transformer-coupled loads.

ASPYRE DT offers a comprehensive list of modular options that deliver space and labor savings including controlled legs (1, 2 or 3), semiconductor fusing, load current measurement, amperage size and user interface.

Features and Benefits

Heater bakeout
- Protects heater on start up
- Eliminates labor and time associated with checking for wet heaters

Integrated semiconductor fusing, current transformer and user interface
- Saves installation time and eases setup and commissioning
- Delivers a user-friendly, intuitive interface

Industry-leading design and serviceability
- Offers a robust SCR design to meet a rugged industrial environment's high quality and reliability needs
- Provides quick and easy access to maintain and service fuses and individual legs in minimal time
- Enables fast troubleshooting by providing helpful thermal system diagnostics

Comprehensive power controller range
- Provides wide range of options from simple single-phase to complex three-phase loads to 690V

100KA short circuit current rating (SCCR)
- Minimizes damage in the event of a short circuit



c-UL® 508 Listed
- Shortens project schedules, agency testing and expenses

Control modes: Contactor, voltage, current or power
- Satisfies a wide range of demanding thermal applications

Load firing modes: Zero-cross, burst fire, phase angle, soft start, half-cycle, single-cycle, delayed triggering
- Handles a wide range of load types including nichrome, medium and long waveform infrared lamps, moly (Kanthal® Super), transformers, silicon carbide, UV lamps and tungsten
- Protects and extends the life of connected loads

Wide range of communication protocols
- Enable factory and process automation with connectivity access to process and equipment data using Modbus® RTU, Modbus® TCP, EtherNet/IP™, Wi-Fi, Profibus, Profinet, USB device (configuration and data file transfers)

Open heater and shorted SCR indication
- Minimizes production downtime with easy to understand, intelligent, troubleshooting diagnostics

Integrated USB and user interface for configuration
- Easily and safely program configuration settings as the user interface can be powered through USB connection
- Eliminates need to work in a hazardous environment near high voltage when configuring the controller. High voltage to the controller and panel can be turned off while setting controller configuration

ASPYRE DT

Typical Applications

- Furnaces and ovens
- Autoclaves
- Kilns
- Heat treatment
- Glass industry
- Semiconductor
- Power generation
- Oil and gas
- HVAC
- Textiles
- Plastics
- Packaging
- Petrochemical
- Dryers and curing

Specifications

Power Bases

- 1-phase, 1 controlled leg (2 SCRs)
- 3-phase, 2 controlled legs (4 SCRs)
- 3-phase, 3 controlled legs (6 SCRs)

Load Amp Range

- 35A to 2100A @ 40°C ambient
- Amperage derating curve for other ambient temperatures

SCR Ratings

- Latching current 1A min.
- Power dissipation: Approximate 1.25 to 1.5 watts per amp per controlled leg
- Leakage current: (35A to 800A models): 15mA
- Leakage current: (1100A to 2100A models): 300mA
- Short Circuit Current Rating (SCCR): 100,000A up to 600VAC

Line and Load Voltage Range

- 24 to 480V ±10% min./max.
- 24 to 600V ±10% min./max.
- 24 to 690V ±10% min./max.
  690VAC only available for 60A and greater models
- Isolation voltage 2500V

Voltage frequency

- 50 to 60Hz

Feedback Types

- Voltage, voltage squared, current, current squared, power, open loop and external
- All feedback types available with any firing type combination

Load Types

- Normal resistive loads: Nichrome, infrared lamps (medium and long waveform)
- Others: Moly (Kanthal® Super), transformers, silicon carbide, UV lamps, short wave infrared lamps (such as tungsten)

Current Limiting and Heater Bakeout

- Available on 1-phase models and 3-phase, 3-leg models 60A to 2100A

Firing Type Combinations	Single-Phase	3-Phase, 2-Leg	3-Phase, 3-Leg
Zero Crossing	X	X	X
Zero Crossing + Start Ramp	X		X*
Zero Crossing + Start Ramp + Soft Start	X		X*
Zero Crossing + Soft Start	X	X	X
Burst Firing	X	X	X
Burst Firing + Soft Start	X	X	X
Burst Firing + Start Ramp	X		X*
Burst Firing + Start Ramp + Soft Start	X		X*
Single Cycle	X		
Single Cycle + Soft Start	X		
Phase Angle	X		X*
Phase Angle + Soft Start	X		X*
Half Cycle	X		
Half Cycle + Soft Start	X		
Burst Firing + Delayed Triggering	X		X*
Burst Firing + Delayed Triggering + Soft Start	X		X*
Burst Firing + Delayed Triggering + Safety Ramp	X		X*
Burst Firing + Delayed Triggering + Safety Ramp + Soft Start	X		X*
Half Cycle + Safety Ramp	X		
Half Cycle + Safety Ramp + Peak Current Limit	X		

*60A to 2100A models

Digital Inputs 1 and 2

- On ≥4VDC, off <1VDC
- 4 to 30VDC @ 5mA max.
- Optically isolated
- Digital input functions: Enable, SSR, alarm reset, change to voltage feedback, local/remote set point enable, change firing to phase angle, select analog input 1 or 2 for set point, enable data logging, enable heater bakeout
- A switched DC control output can be connected to the digital input as an open loop control mode command signal

Analog Inputs 1 and 2

- Voltage: 0 to 10VDC, 15KΩ impedance
- Current: 0 to 20mA or 4 to 20mA, 100Ω impedance
- Potentiometer: 10KΩ min.
- Analog Input 1 Function: Set point reference
- Analog Input 2 Functions: Current limit, feedback or set point reference

ASPYRE DT

Agency Approval and Regulatory

- 35A to 700A models: cULus 508 Listed File E73741
- 35A to 700A models: cUL® Listed to C22.2 No. 14
- 800A to 2100A models: UL® 508 Listed File E73741
- CE EMC Directive 2014-30-EU, EN 60947-4-3 Class A Emissions
- CE Safety Directive 2014-35-EU, EN 60947-4-1, 4-3
- IP20 with all covers in place
- RoHS 2011-65-EU
- W.E.E.E. 2012-19-EU
- 690VAC units not covered by UL®

Accessories

- Free Watlow ASPYRE configuration software on the Watlow website at http://www.watlow.com/en/resources-and-support/Technical-Library/Software-and-Demos
- 6 ft USB 2.0 to micro USB device cable (p/n 0219-0480-0000)
- External power supply UL® Class 2, 90-263VAC input, 24VDC output, 1.30A, 31W (p/n 0847-0299-0000)
- Fuses - see table in next column

Fuses

ASPYRE Model Number	Qty. Used Per Unit	Watlow Fuse Part Number	
		480V and 600V	690V
DT_ _ _ - 035 ...	1/leg	17-8050	N/A
DT_ _ _ - 040 ...			
DT_ _ _ - 060 ...		0808-0363-0160	2048-2760
DT_ _ _ - 090 ...			
DT_ _ _ - 120 ...		0808-0363-0180	
DT_ _ _ - 150 ...		0808-0363-0200	2048-4405
DT_ _ _ - 180 ...		0808-0363-0250	2048-4418
DT_ _ _ - 210 ...		0808-0363-0315	2048-4426
DT1_ _ - 300 ...	1	0808-0362-0000	N/A
DT1_ _ - 400 ...	1	0808-0358-0000	0808-0358-0000
DT1_ _ - 500 ...	1	0808-0359-0000	0808-0359-0000
DT1_ _ - 600 ...	4	0808-0363-0250	808-0363-0250
DT1_ _ - 700 ...	4		
DT2_ _ - 300 ...	3	0808-0357-0000	2055-5072
DT2_ _ - 400 ...	3	0808-0358-0000	0808-0358-0000
DT2_ _ - 450 ...	6	0808-0360-0000	0808-0360-0000
DT2_ _ - 500 ...	6		
DT2_ _ - 600 ...	4	0808-0357-0000	0808-0357-0000
DT2_ _ - 700 ...	4		
DT3_ _ - 300 ...	3	0808-0357-0000	2055-5072
DT3_ _ - 350 ...	3	0808-0358-0000	0808-0358-0000
DT3_ _ - 400 ...	3		
DT3_ _ - 450 ...	3	0808-0359-0000	0808-0359-0000
DT3_ _ - 500 ...	3		
DT_ _ _ - 800 ...	4/leg	0808-0363-0250	0808-0363-0250
DT_ _ _ - 1K1 ...	2/leg	2078-4948	2078-5301
DT_ _ _ - 1K4 ...		2078-5257	2078-5358
DT_ _ _ - 1K6 ...		2078-5261	2078-5413
DT_ _ _ - 1K8 ...			
DT_ _ _ - 2K1 ...			

N/A - Not available

ASPYRE DT

I/O Functional Block Diagram

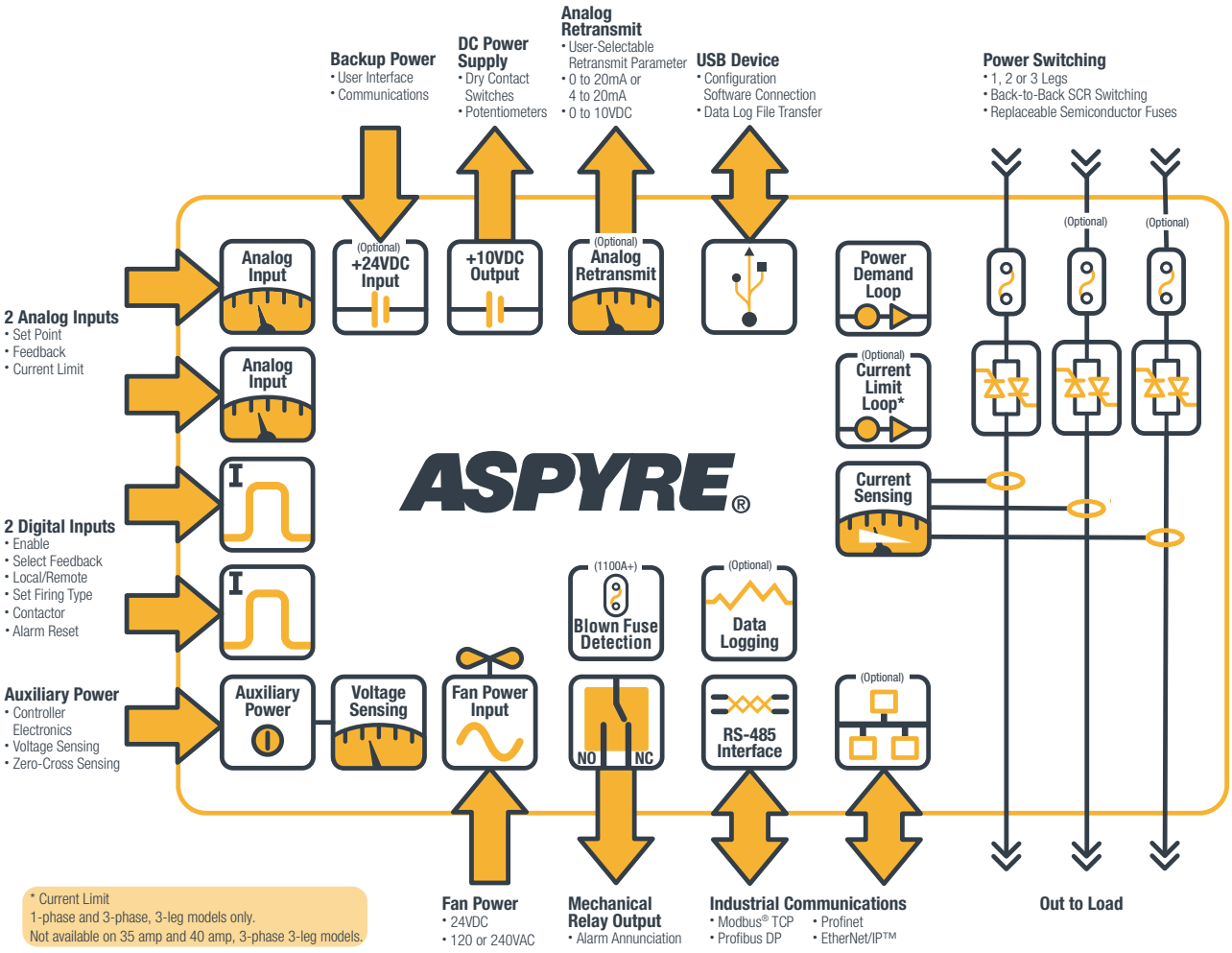

ASPYRE DT

Dimensions and Shipping Weight

Current and Voltages	1-Phase, 1 Controlled Leg	3-Phase, 2 Controlled Legs	3-Phase, 3 Controlled Legs
35 and 40A **480 and 600VAC**	 4.77 in. H x 2.84 in. W x 7.28 in. D - 2.6 lbs	 4.77 in. H x 4.25 in. W x 7.28 in. D - 4 lbs	 4.77 in. H x 5.67 in. W x 7.28 in. D - 5.5 lbs
60, 90, 120, 150, 180 and 210A **480 and 600VAC**	 10.6 in. (60A) or 10.79 in. (90-210A) H x 3.66 in. W x 6.7 in. D - 9 lbs	 10.6 in. (60A) or 10.79 in. (90-210A) H x 7.36 in. W x 6.7 in. D - 18 lbs	 10.6 in. (60A) or 10.79 in. (90-210A) H x 11.1 in. W x 6.7 in. D - 27 lbs
60, 90, 120, 150, 180 and 210A **690VAC**	 17.33 in. H x 5.40 in. W x 10.63 in. D - 23 lbs	 60-90A = 17.33 in. H x 5.40 in. W x 10.63 in. D - 23 lbs 120-210A = 17.33 in H x 10.32 in. W x 10.63 in. D - 40 lbs	
1 and 2 leg: **300, 400, 500, 600 and 700A** **3 leg:** **300, 350, 400, 450 and 500A** **480, 600 and 690VAC**	 20.47 in. H x 5.4 in. W x 10.63 in. D - 33 lbs	 20.47 in. H x 10.32 in. W x 10.63 in. D - 63 lbs	

ASPYRE DT

Dimensions and Shipping Weight (cont.)

Current and Voltages	1-Phase, 1 Controlled Leg	3-Phase, 2 Controlled Legs	3-Phase, 3 Controlled Legs
800A 480, 600, 690VAC	 22.1 in. H x 5.4 in. W x 10.7 in. D - 23.2 lbs	 22.1 in. H x 10.9 in. W x 10.7 in. D - 46.3 lbs	 22.1 in. H x 16.2 in. W x 10.7 in. D - 69.5 lbs
1100A 480, 600, 690VAC	 21.7 in. H x 13 in. W x 13.7 in. D - 59.5 lbs	 21.7 in. H x 20.6 in. W x 13.7 in. D - 108 lbs	 21.7 in. H x 28.3 in. W x 13.7 in. D - 158.7 lbs
1400, 1600, 1800, 2100A 480, 600, 690VAC	 28.8 in. H x 13 in. W x 13.7 in. D - 74.9 lbs	 28.8 in. H x 20.6 in. W x 13.7 in. D - 143.3 lbs	 28.8 in. H x 28.3 in. W x 13.7 in. D - 216.1 lbs

ASPYRE DT

Ordering Information

Base model includes: Power control loop for open loop, voltage, current or power control, 2 analog inputs (0-10VDC, 4-20mA selectable), 2 digital inputs, semiconductor fusing and current transformers for each leg, mechanical relay heater break alarm, RS-485 Modbus® communications, pixel OLED user interface and keypad, 10VDC auxiliary power supply

Part Number

①② Model	③ Phase	④⑤ Max. Line & Load Voltage		⑥⑦⑧ Amperage	⑨ Auxiliary Power	⑩ Current Limit Loop/Analog Retransmit Output		⑪ Cooling Fan Voltage	⑫ Add'l Wired Comms.	⑬ Data Logging	⑭⑮ Custom Options- Firmware Overlay, Preset Parameters and Locked Code
DT			-				-				

③ Phase

1 =	1-phase, 1 controlled leg
2 =	3-phase, 2 controlled leg
3 =	3-phase, 3 controlled leg

④⑤ Maximum Line and Load Voltage

48=	480VAC
60=	600VAC
69=	690VAC - Only available for 60A and greater models

⑥⑦⑧ Amperage

035 =	35A
040 =	40A
060 =	60A
090 =	90A
120 =	120A
150 =	150A
180 =	180A
210 =	210A
300 =	300A
350 =	350A - Not available for 1-phase, 1 leg or 3-phase, 2 leg models
400 =	400A
450 =	450A - Not available for 1-phase, 1 leg models
500 =	500A
600 =	600A - Not available for 3-phase, 3 controlled leg models
700 =	700A - Not available for 3-phase, 3 controlled leg models
800 =	800A
1K1 =	1100A
1K4 =	1400A
1K6 =	1600A
1K8 =	1800A
2K1 =	2100A

⑨ Auxiliary Power

		35 to 40A	60 to 800A	1100 to 2100A
1 =	100 or 120VAC	OK	OK	OK
2 =	200, 208, 220, 230 or 240VAC	OK	OK	OK
3 =	277VAC	OK	OK	N/A
4 =	380, 400, 415, 440 or 480VAC	OK	OK	N/A
5 =	600VAC	OK	OK	N/A
6 =	690VAC	N/A	OK	N/A

Note: For 35A to 800A models you ***must*** choose the nominal, switched line voltage. For 1100A to 2100A models the auxiliary power is independent of the switched voltage.

⑩ Current Limit Loop/Analog Retransmit Output

		35A to 40A			60A to 2100A		
		DT1	DT2	DT3	DT1	DT2	DT3
A =	Both	OK	N/A	N/A	OK	N/A	OK
B =	Neither	OK	OK	OK	OK	OK	OK
C =	Current limit	OK	N/A	N/A	OK	N/A	OK
D =	Retransmit	OK	OK	OK	OK	OK	OK

Note: If using both Analog Retransmit (digit 10, options A or D) and Additional Wired Communication (digit 12, options 1-5) an external power supply is required. See Accessories.
OK = Available for these models.
N/A = Not available for these models.

⑪ Cooling Fan Voltage

		35A to 40A	60A to 480/600V	60A to 690V	90A to 800A	1100A to 2100A
0 =	No fan	OK	OK	N/A	N/A	N/A
1 =	120VAC	N/A	N/A	OK	OK	OK
2 =	240VAC	N/A	N/A	OK	OK	OK
3 =	24VDC	N/A	N/A	OK	OK	N/A

OK = Available for these models.
N/A = Not available for these models.

⑫ Additional Wired Communication (Modbus® RTU-485 Comes Standard in all Models)

0 =	No additional communications option
1 =	Modbus® TCP
3 =	Profibus DP
4 =	Profinet
5 =	EtherNet/IP™

Note 1: If using both Analog Retransmit (digit 10, options A or D) and Additional Wired Communication (digit 12, options 1-5) an external power supply is required. See Accessories.

⑬ Data Logging

A =	No data logging
C =	Data logging with battery backup and real time clock

Note: 35A and 40A models do not include battery backup or real time clock.

⑭⑮ Custom Options - Firmware Overlay, Preset Parameters and Locked Code

AA=	Standard
NC=	No IP20 covers on 1100A and greater models
XX=	Contact factory - custom firmware, preset parameters, locked code

DIN-A-MITE® A

The DIN-A-MITE® A power controller provides a low-cost, highly compact and versatile solid state option for controlling electric heat. This controller is designed and manufactured with the quality features expected from Watlow. DIN-rail and panel mounting is standard on every controller. There is no need to worry about mercury, the DIN-A-MITE controller is mercury free.

Features include single-phase zero cross switching up to 25 amperes at 600VAC (see rating curve). A unique integrated design removes the guesswork associated with selecting a proper heat sink and adequate terminations for the application.

Variable time-base, 4-20mA process control and VAC/VDC input contactor versions are available. All options are model number dependent and factory configurable. This power controller also includes 200KA short circuit current rating (SCCR) tested up to 480VAC to minimize damage in the event of a short circuit when used with required fusing.

Watlow's DIN-A-MITE A is available through Watlow ***SELECT***®, a program that enables you to quickly identify, configure and receive your thermal products faster and easier than ever before. With ***SELECT***, you use a variety of tools to guide your decision, configure products for an exact fit and quickly receive your order.



Features and Benefits

200KA SCCR with proper fusing
- Minimizes damage in the event of a short circuit

DIN-rail and panel mounting
- Provides versatility and quick, low-cost installation

Compact size
- Reduces panel space and cost

Touch-safe terminals
- Increases safety for installer and user

Mercury free
- Assures environmental safety

Faster switching with solid state
- Saves energy and extends heater life

UL® 508 listed, C-UL®, RoHS and CE with filter
- Meets applications requiring agency approval
- Reduces end product documentation cost

Back-to-back SCR design
- Ensures a rugged design

DIN-A-MITE A

Specifications

Operator Interface
- Control input
- Input indication LED

Amperage
- 1-phase, see the output rating curve
- Max. I^2t for fusing: $4000A^2$ sec
- Latching current: 400mA max.
- Holding current: 200mA max.
- Power dissipation is 1.2 watts per ampere switched
- 200KA SCCR, Type 1 and 2 approved with the recommended fusing; see user manual

Line Voltage
- 24 to 660VAC model number dependent; see ordering information
- Off-state leakage: 1mA at 77°F (25°C) max.
- 50/60Hz independent

Control Mode, Zero Cross
- Control option C: VDC input, contactor output
- Control option K: VAC input, contactor output
- To increase service life on contactor models, the cycle time should be less than three seconds
- Control option F: 4 to 20mA DC input, variable time-base control output (3 cycles on, 3 cycles off at 50% power)

Control Input
- AC contactor: 24VAC ±10%, 120VAC +10/-25%, 240VAC +10/-25% @ 25mA max.
- DC contactor: 4.5 to 32VDC: max. current @ 4.5VDC is 8mA
- Loop powered linear current 4 to 20mA DC: loop-powered, control option F0 only (requires current source with 8.0VDC available, no more than two DIN-A-MITE inputs can be connected in series)

Agency Approvals
- CE with proper filter:
  204/108/EC Electromagnetic Compatibility Directive
  EN 61326-1: Industrial Immunity Class A Emissions
  2006/95/EC Low Voltage Directive
  EN 50178 Safety Requirements
  Installation category III, pollution degree 2
- c UL us LISTED UL® 508 listed and C-UL® File E73741
- 2011/65/EU RoHS 2

Control Input Terminals
- Compression: Will accept 24 to 16 AWG (0.2 to 1.5 mm^2) wire

Line and Load Terminals
- Compression: Will accept 18 to 8 AWG (0.8 to 8.4 mm^2) wire

Operating Environment
- -4 to 176°F (-20 to 80°C); see the output rating curve chart for your application
- 0 to 90% RH (relative humidity), non-condensing
- Insulation tested to 3,000 meters
- Units are suitable for “Pollution degree 2”

Mounting
Options include DIN-rail or standard back panel mounting
- DIN EN 50022, 35 mm by 7.5 mm
- Mount cooling fins vertically

Dimensions
- 3.7 in. (94 mm) high x 2.0 in. (50 mm) wide x 3.9 in. (98 mm) deep
- Weight: 0.71 lb (0.32kg)

Specifications are subject to change without notice.

Output Rating Curve

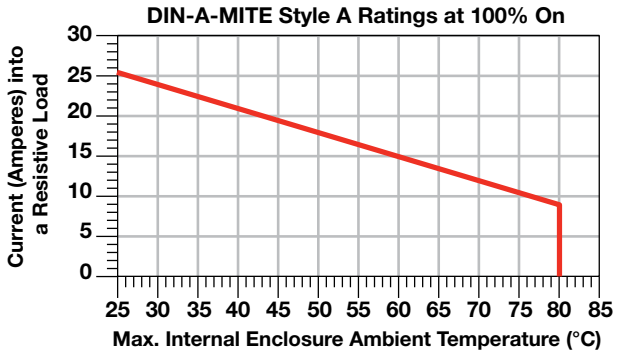

DIN-A-MITE A

Ordering Information

Part Number

①	②	③ Phase	④ Cooling & Current Rating		⑤ ⑥ Line & Load Voltage	⑦ ⑧ Control		⑨	⑩ User Manual	⑪ ⑫ Custom Options
D	A	1	0	-			-	0		

③	Phase
1 =	1-phase, 1 controlled leg

④	Cooling and Current Rating (See rating curve)
0 =	Natural convection current rating 18A @ 50°C

⑤ ⑥	Line and Load Voltage
02 =	24 to 48VAC
24 =	120 to 240VAC
60 =	277 to 600VAC

⑦ ⑧	Control
C0 =	4.5 to 32VDC input, contactor output
F0 =	4 to 20mA DC input, variable time-base output
K1 =	22 to 26VAC input, contactor output
K2 =	100 to 120VAC input, contactor output
K3 =	200 to 240VAC input, contactor output

⑩	User Manual
0 =	English
1 =	German
2 =	Spanish
3 =	French

⑪ ⑫	Custom Options
00 =	Standard part
XX =	Any letter or number, custom options

Recommended Fuses and Fuse Holders

Semiconductor Fuses and Holders

Part Number	Description
17-8025	25A fuse
17-5110	10-25A holder

DFJ Combination Fuses and Holders

Part Number	Description
0808-0325-0020	20A fuse
0808-0325-0030	30A fuse
0808-0326-1530	15-30A holder

DIN-A-MITE® B

The DIN-A-MITE® B power controller provides a low-cost, highly compact and versatile solid state option for controlling electric heat. This controller is designed and manufactured with the quality features expected from Watlow. DIN-rail and panel mounting are standard on every control. There is no need to worry about mercury, the DIN-A-MITE controller is mercury free.

Features include single-phase and three-phase zero cross switching up to 40 and 22 amperes, respectively, at 600VAC (see rating curve). A unique, integrated design removes the guesswork associated with selecting a proper heat sink and adequate terminations for the application.

Variable time-base, 4-20mA process control and VAC/VDC input contactor versions are available. A shorted output alarm option is also available. All options are model number dependent and factory configurable. This power controller includes 200KA short circuit current rating (SCCR) tested up to 480VAC to minimize damage in the event of a short circuit when used with required fusing.

Watlow's DIN-A-MITE B is available through Watlow ***SELECT***®, a program that enables you to quickly identify, configure and receive your thermal products faster and easier than ever before. With ***SELECT***, you use a variety of tools to guide your decision, configure products for an exact fit and quickly receive your order.



Features and Benefits

200KA SCCR with proper fusing
- Minimizes damage in the event of a short circuit

DIN-rail and panel mounting
- Provides versatility and quick, low-cost installation

Compact size
- Reduces panel space and cost

Touch-safe terminals
- Increases safety for installer and user

Single- and three-phase power
- Permits use in a variety of applications

Mercury free
- Assures environmental safety

Faster switching with solid state
- Saves energy and extends heater life

UL® 508 listed, C-UL®, RoHS and CE with filter
- Meets applications requiring agency approval
- Reduces end product documentation cost

Back-to-back SCR design
- Ensures a rugged design

Shorted output alarm (optional)
- Simplifies troubleshooting and reduces downtime

DIN-A-MITE B

Specifications

Operator Interface
- Control input and indication light
- Alarm output and indication light

Amperage Rating
- See the output rating curve
- Max. surge current for 16.6ms, 380A peak
- Max. I^2t for fusing is 4,000A^2s
- Latching current: 400mA max.
- Holding current: 200mA max.
- Off-state leakage 1mA at 77°F (25°C) max.
- Power dissipation = 1.2 watts per ampere per leg switched
- 200KA SCCR, Type 1 and 2 approved with the recommended fusing; see user manual

Line Voltage
- 24 to 660VAC model number dependent; see ordering information

Control Mode, Zero Cross
- Control option C: VDC input, contactor output
- Control option K: VAC input, contactor output
- To increase service life on contactor models, the cycle time should be less than 3 seconds
- Control option F: 4 to 20mA DC input, variable time-base control output

Control Input
- AC contactor: 24VAC ±10%, 120VAC +10/-25%, 240VAC +10/-25% @ 25mA max. per controlled leg
- DC contactor: 4.5 to 32VDC: max. current @ 4.5VDC is 6mA per leg. Add 2mA per LED used to the total current
- Loop powered linear current: 4 to 20mA DC: loop-powered, control option F0 only (requires current source with 8.0VDC available, no more than 2 DIN-A-MITE inputs connected in series)

Alarm

Shorted SCR Alarm Option
- Alarm state when the input command signal off and a 10A or more load current is detected by the current transformer (2 turns required for 5A and 3 turns for 2.5A)

Alarm Output
- Energizes on alarm, non-latching
- Triac 24 to 240VAC, external supply with a current rating of 300mA @ 77°F (25°C), 200mA @ 122°F (50°C), 100mA @ 176°F (80°C) and a holding current of 200 µA with a latching current of 5mA typical

Agency Approvals
- CE with proper filter:
  204/108/EC Electromagnetic Compatibility Directive
  EN 61326-1: Industrial Immunity Class A Emissions
  2006/95/EC Low Voltage Directive
  EN 50178 Safety Requirements
  Installation category III, pollution degree 2
- c UL us LISTED UL® 508 listed and C-UL® File E73741
- 2011/65/EU RoHS 2

Control Input Terminals
- Compression: Wiill accept 24 to 16 AWG (0.2 to 1.5 mm^2) wire

Line and Load Terminals
- Compression: Will accept 18 to 8 AWG (0.8 to 8.4 mm^2) wire

Operating Environment
- See the output rating curve
- 0 to 90% RH (relative humidity), non-condensing
- Storage temperature: -40 to 185°F (-40 to 85°C)
- Operating temperature: -4 to 176°F (-20 to 80°C)
- Insulation tested to 3,000 meters

DIN-rail Mount
- DIN EN 50022, 35 mm by 7.5 mm

Back-Panel Mount
- 4 mounting holes No. 6 to No. 8 (M3 to M4) fastener

Dimensions
- 3.7 in. (94 mm) high x 3.3 in. (83 mm) wide x 4.9 in. (124 mm) deep
- Weight: 1.5 lb (0.68kg)

Specifications are subject to change without notice.

Output Rating Curve

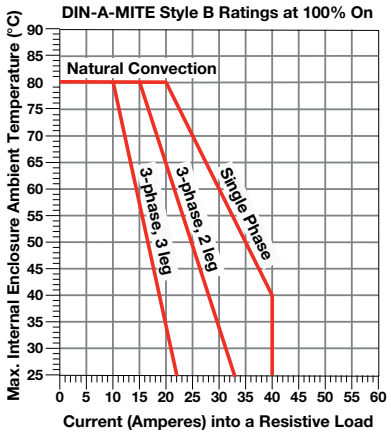

Current Rating Table

Phase	Cooling	Current at 122°F (50°C)
1	0	35A
2, 8	0	25A
3, 9	0	17A

DIN-A-MITE B

Ordering Information

Part Number

①	②	③	④		⑤ ⑥	⑦ ⑧		⑨	⑩	⑪ ⑫
		Phase	Cooling & Current Rating	-	Line & Load Voltage	Control	-	Alarm	User Manual	Custom Options
D	B			-			-			

③	Phase
1 =	1-phase, 1 controlled leg
2 =	3-phase, 2 controlled legs
3 =	3-phase, 3 controlled legs
8 =	2 independent zones (control options C or K)
9 =	3 independent zones (control options C or K)

④	Cooling and Current Rating (See rating curve)
0 =	Natural convection

⑤ ⑥	Line and Load Voltage
02 =	24 to 48VAC
24 =	120 to 240VAC
60 =	277 to 600VAC

⑦ ⑧	Control
C0 =	4.5 to 32VDC input, contactor output
F0 =	4 to 20mA DC input, variable time-base output
K1 =	22 to 26VAC input, contactor output
K2 =	100 to 120VAC input, contactor output
K3 =	200 to 240VAC input, contactor output

⑨	Alarm
0 =	No alarm
S =	Shorted SCR alarm

⑩	User Manual
0 =	English
1 =	German
2 =	Spanish
3 =	French

⑪ ⑫	Custom Options
00 =	Standard part
XX =	Any letter or number, custom options

Recommended DIN-rail Mount Fuses and Fuse Holders

Semiconductor Fuses and Holders

Part Number	Description
17-8020	20A fuse
17-8025	25A fuse
17-8030	32A fuse
17-8040	40A fuse
17-8050	50A fuse
17-5110	10-25A holder
17-5114	32-50A holder

DFJ Combination Fuses and Holders

Part Number	Description
0808-0325-0020	20A fuse
0808-0325-0030	30A fuse
0808-0325-0040	40A fuse
0808-0325-0050	50A fuse
0808-0326-1530	15-30A holder
0808-0326-3560	35-60A holder

DIN-A-MITE® C

The DIN-A-MITE® C silicon controlled rectifier (SCR) power controller provides a low cost, compact and versatile solid state option for controlling electric heat. This controller is designed and manufactured with the quality features expected from Watlow. DIN-rail/panel mount and through-wall mount versions are available.

Features include single-phase, three-phase/two leg, and three-phase/three leg, 24-600VAC operation. Current switching capabilities range from 30 to 80A depending on the model ordered.

Variable time-base, linear voltage and current process control or VAC/VDC input contactor versions are available. Single-phase, phase angle firing and current limiting are also available. All options are model number dependent and factory configurable. This power controller includes 200KA short circuit current rating (SCCR) tested up to 480VAC to minimize damage in the event of a short circuit when used with required fusing.

Watlow's DIN-A-MITE C is available through Watlow ***SELECT***®, a program that enables you to quickly identify, configure and receive your thermal products faster and easier than ever before. With ***SELECT***, you use a variety of tools to guide your decision, configure products for an exact fit and quickly receive your order.



Features and Benefits

200KA SCCR with proper fusing
- Minimizes damage in the event of a short circuit

DIN-rail, panel and thru-wall mounting
- Provides versatility and quick, low-cost installation

Compact size
- Reduces panel space and cost

Touch-safe terminals
- Increases safety for installer and user

One- and three-phase power
- Can be used in a variety of applications

Open heater/shorted output alarm
- Notifies the user in case of an open heater or shorted output

Mercury free
- Assures environmental safety

Faster switching with solid state
- Saves energy and extends heater life

UL® 508 listed, C-UL®, RoHS and CE with filter
- Meets applications requiring agency approval
- Reduces end product documentation cost

System solution component
- Provides single source thermal loop

Back-to-back SCR design
- Ensures a rugged design

DIN-A-MITE C

Specifications

Operator Interface

- Control input and indication light
- Alarm output and indication light
- Current limit indication LED

Amperage Rating

- See output rating curves on the next page
- Max. surge current for 16.6ms, 1,350A peak
- Max. I^2t for fusing is 9100A^2s
- Latching current: 500mA max.
- Holding current: 200mA max.
- Fan current: 0.14A for 24VDC; 0.12A for 120VAC; 0.06A for 240VAC
- Off-state leakage 1mA at 77°F (25°C) max.
- Power dissipation: 1.2 watts per ampere per leg switched
- 200KA SCCR, Type 1 and 2 approved with the recommended fusing; see user manual

Line Voltage

- 24 to 48VAC units: 20.4VAC min. to 53VAC max.
- 100 to 240VAC units: 48VAC min. to 265VAC max.
- 277 to 600VAC units: 85VAC min. to 660VAC max.
- 100 to 120VAC, 200 to 208VAC, 230 to 240VAC, 277VAC, 400VAC, 480VAC, 600VAC, +10/-15%, 50 to 60Hz independent ±5% (control options L, P and S)

Alarms (Zero Cross Models Only)

Shorted SCR Alarm Option

- Alarm state when the input command signal is off and a 10A or more load current is detected by the current transformer (2 turns required for 5A and 3 turns for 2.5A)

Open Heater Alarm Option (Control Option S Only)

- Alarm state when the input command signal is on and the load current detected by the current transformer is 20% less than customer adjusted set point

Alarm Output

- Energizes on alarm, non-latching
- Triac 24 to 240VAC, external supply with a current rating of 300mA @ 77°F (25°C), 200mA @ 122°F (50°C), 100mA @ 176°F (80°C) and a holding current of 200µA with a latching current of 5mA typical

Agency Approvals

- CE with proper filter:
  204/108/EC electromagnetic compatibility directive EN 61326-1: Industrial immunity Class A emissions not suitable for Class B environments
  Phase angle and phase angle with current limit (control options P and L) are not CE approved for conducted or radiated emissions
  2006/95/EC low voltage directive EN 50178 safety requirements installation category III, pollution degree 2
- UL® 50 Type 4X enclosure, Class 1, Div. 2 per ANSI/ISA 12.12.01. Through-wall heat sink models T4 File 184390
- c UL us LISTED UL® 508 listed and C-UL® File E73741
- Shock and vibration tested to IEC 60068-2-32
- Vibration tested to IEC 60068-2-6
- 2011/65/EU RoHS 2

Control Input Terminals

- Compression: Will accept 24 to 16 AWG (0.2 to 1.5 mm^2) wire
- Torque to 4.4 in. lb (0.5 Nm) max. with a 1/8 in. (3.5 mm) blade screwdriver

Line and Load Terminals

- Compression: Will accept 14 to 3 AWG (2.5 to 25 mm^2) wire
- Torque to 24 in. lb (2.7 Nm) max. with a 1/4 in. (6.4 mm) blade screwdriver, or a type 1A, #2 Pozi driver

Operating Environment

- See the output rating curve chart on next page
- 0 to 90% RH (relative humidity), non-condensing
- Storage temperature: -40 to 185°F (-40 to 85°C)
- Operating temperature: -29 to 176°F (-34 to 80°C)
- Insulation tested to 3,000 meters

DIN-Rail Mount

- DIN EN 50022, 35 mm by 7.5 mm

Back-Panel Mount

- 4 mounting holes No. 6 to No. 8 (M3 to M4) fastener

Through-Wall Mount

- See page 100 for through-wall panel cutout (**Note:** Mount cooling fins vertically.)

Additional Specifications for Contactors and Proportional Controllers

Control Mode, Zero-Cross

- Control option C: VDC input, contactor output
- Control option K: VAC input, contactor output
- To increase service life on contactor models, the cycle time should be less than 3 seconds
- Control option F: 4 to 20mA DC input, variable time-base control output

DIN-A-MITE C

Specifications *(Continued)*

Control Input

- AC contactor: 24VAC ±10%, 120VAC +10/-25%, 240VAC +10/-25% @ 25mA max. per controlled leg
- DC contactor: 4.5 to 32VDC: max. current @ 4.5VDC is 6mA per leg, add 2mA per LED used to the total current
- Loop powered linear current: 4 to 20mA DC: loop-powered, control option F0 only (requires current source with 8.0VDC available, no more than 2 DIN-A-MITE inputs connected in series)

Additional Specifications for Phase Angle, Phase Angle Current Limit and Single-Cycle Variable Time-Base

Operation

- With control option S (single-cycle, variable time-base) the output is not on for more than 1 consecutive AC cycle below 50% power and not off for more than 1 consecutive AC cycle above 50% power
- Phase angle control, 1-phase only

Control Input

- 0 to 20mA, 4 to 20mA, 0 to 5VDC, 1 to 5VDC and 0 to 10VDC
- Input impedance 250Ω for 4mA to 20mA, 5kΩ for linear voltage input

Output Voltage

- 100 to 120VAC, 200 to 208VAC, 230 to 240VAC, 277VAC, 400VAC, 480VAC and 600VAC, ±10%

Linearity (Control Option S)

- ±5% input to output power over 0 to 100% of span between calibration points

Linearity (Control Options P and L)

- ±5% input to output power, as referenced to a sinusoidal power curve, between calibration points

Resolution

- Better than 0.1% of input span with respect to output change

Soft Start (Control Options P and L)

Typically:

- 5 seconds soft start on power up
- Soft start on thermostat overtemperature
- Soft start on 1/2 cycle drop out detection
- 1 second soft start on set point change

Options

- Alarm option is not available on control options P or L

Specifications are subject to change without notice.

Output Rating Curves

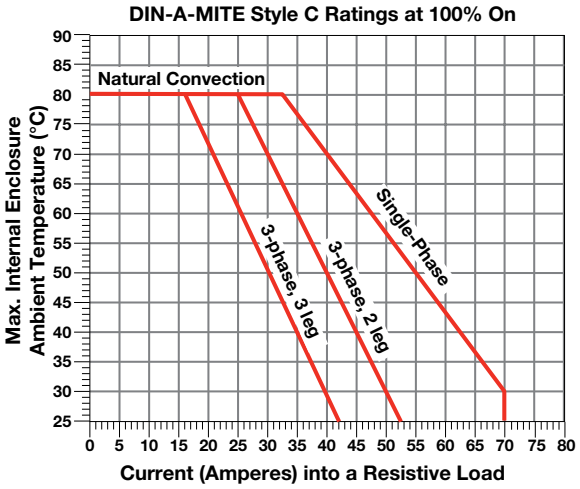

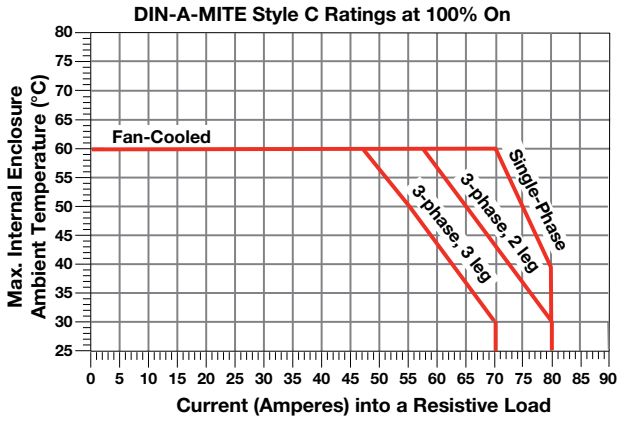

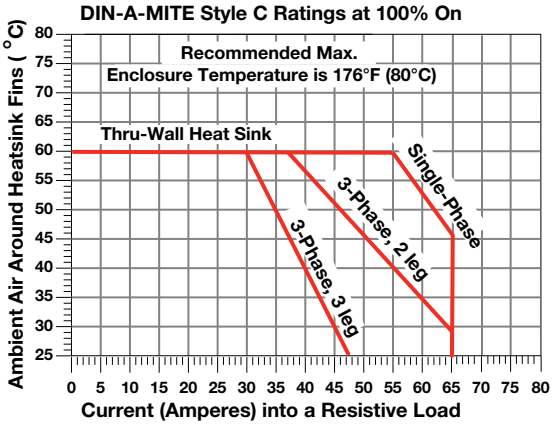

DIN-A-MITE C

Dimensions—Natural Convection, DIN-rail/Panel Mount

Front

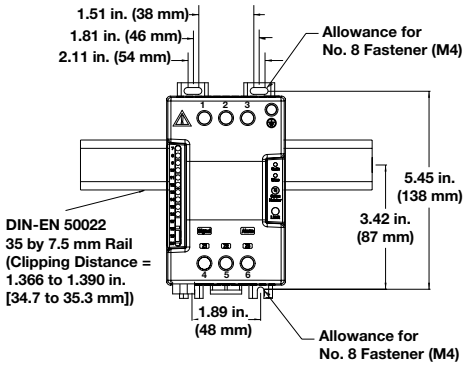

Side

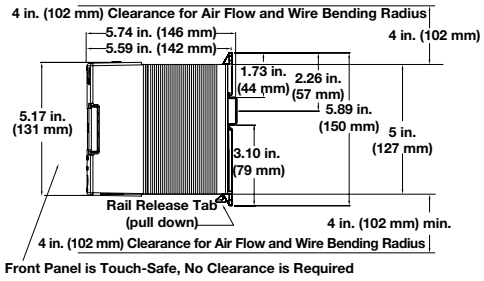

Top

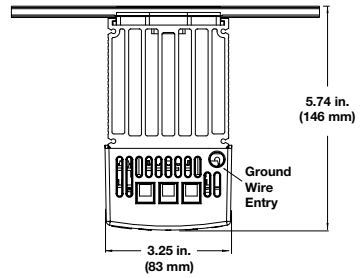

Dimensions—Fan Cooled, DIN-rail/Panel Mount

Side

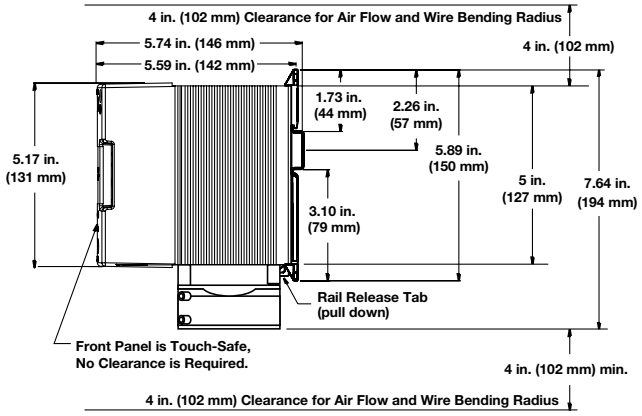

Dimensions—Natural Convection, Through-Wall Mount①

Front

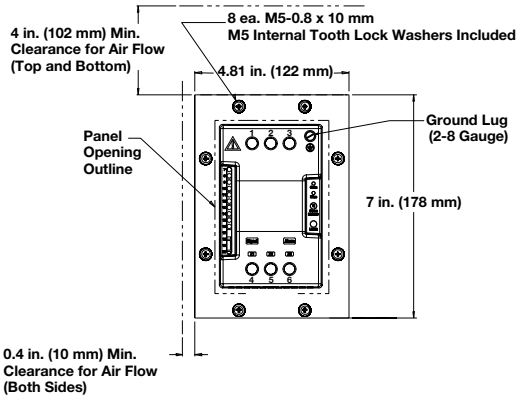

Top

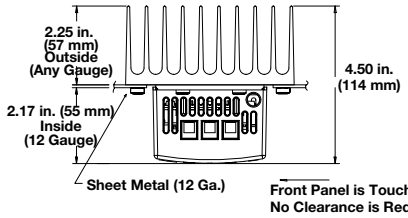

Panel Cutout

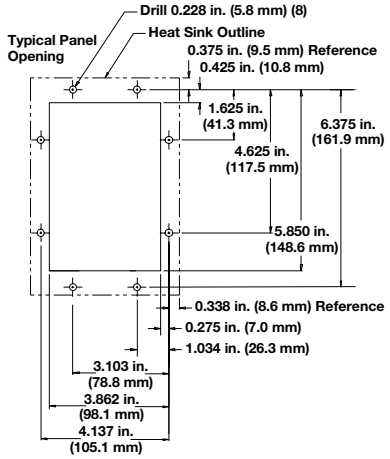

① With the potential for high through-wall heat sink temperatures, application may require a touch-safe shield.

DIN-A-MITE C

Extended Heater and Power Controller Life with Variable Time-Base

With variable time-base control, the power controller automatically adjusts the time-base and output power with respect to the command signal. Accelerated life testing shows that variable time-base control significantly reduces expansion and contraction of the heater element. This extends heater and power controller life while improving process temperature control. This saves money on heaters, downtime and maintenance.

Loop-Powered or Transformer Powered

Loop-Powered

By using a temperature controller's 4-20mA process output signal as the power supply for the DIN-A-MITE input, the cost of the power controller can be reduced. With control option F0 the 4-20mA control signal simultaneously powers the DIN-A-MITE's internal electronics and provides the input command signal.

Transformer-Powered

DIN-A-MITE controllers with single-cycle, variable time-base or phase angle outputs (control options L, P and S) detect the power line zero cross with a transformer that also powers their internal electronics. These units can be controlled manually with a potentiometer or automatically with a temperature controller using any of the control options: 4-20mA, linear voltage (0-5,1-5 and 0-10VDC).

Loop-Powered, Variable Time-Base Output

Models: DC_ _ - _ _F0 - _ _ _ _

20% Power Output: **3 AC cycles on, 12 cycles off**

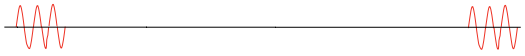

50% Power Output: **3 AC cycles on, 3 cycles off**

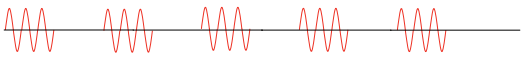

80% Power Output: **12 AC cycles on, 3 cycles off**

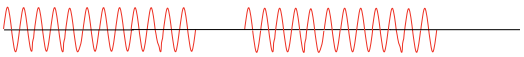

With loop-powered, variable time-base control, the minimum on or off time is three cycles.

Phase Angle Output

Models: DC1_ - _ _ [L, P] _ - 0_ _ _

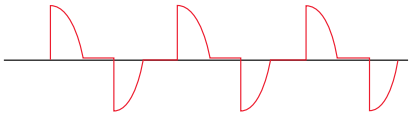

Phase angle control (control options L and P) is infinitely variable over the period of the AC sine wave. It provides a variable voltage and/or current output. The phase angle circuitry is transformer powered and accepts a linear voltage, current or potentionmeter input.

Single-Cycle, Variable Time-Base Output

Models: DC_ _ - _ _S_ - _ _ _ _

25% Power Output: **1 AC cycle on, 3 cycles off**

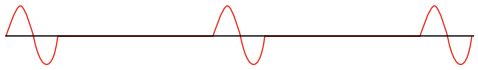

50% Power Output: **1 AC cycle on, 1 cycle off**

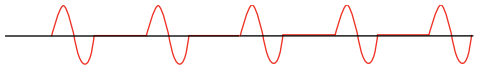

With single-cycle, variable time-base control, at 50 percent power, the output is on for one cycle and off for one cycle. At 25 percent, it is on for one cycle and off for three cycles. Under 50 percent, the output is not on for more than one consecutive cycle; over 50 percent the output is not off for more than one consecutive cycle.

Semiconductor Fuses for Applications through 600VAC

Fuse Part Number		
Fuse Rating	**Watlow**	**Cooper Bussman®**
40A	**17-8040**	FWP-40A14F
50A	**17-8050**	FWP-50A14F
63A	**17-8063**	FWP-63A22F
80A	**17-8080**	FWP-80A22F
100A	**17-8100**	FWP-100A22F

Fuse Holder Part Number		
Fuse Rating	**Watlow**	**Ferraz Shawmut**
40A	**17-5114**	US141I
50A	**17-5114**	US141I
63A	**17-5122**	US221I
80A	**17-5122**	US221I
100A	**17-5122**	US221I

Combined Branch Protection and Semiconductor Fuses for Applications through 480VAC

Fuse Part Number		
Fuse Rating 125% of Load	**Watlow**	**Cooper Bussman®**
20A	**0808-0325-0020**	DFJ-20
30A	**0808-0325-0030**	DFJ-30
40A	**0808-0325-0040**	DFJ-40
50A	**0808-0325-0050**	DFJ-50
63A	**0808-0325-0060**	DFJ-60
80A	**0808-0325-0080**	DFJ-80
100A	**0808-0325-0100**	DFJ-100

Fuse Holder Part Number		
Fuse Rating	**Watlow**	**Cooper Bussman®**
20 and 30A	**0808-0326-1530**	CH30J1i
40 to 63A	**0808-0326-3560**	CH60J1i
80 and 100A	**0808-0326-7010**	J601001CR

DIN-A-MITE C

Ordering Information

Part Number

①	②	③	④		⑤ ⑥	⑦ ⑧		⑨	⑩	⑪ ⑫
		Phase	Cooling & Current Rating/Leg	-	Line & Load Voltage	Control	-	Alarm	User Manual	Custom Options
D	C			-			-			

③	Phase
1 =	1-phase, 1 controlled leg
2 =	3-phase, 2 controlled legs
3 =	3-phase, 3 controlled legs (use with four wire wye)
8 =	2 independent zones (control options C, K)
9 =	3 independent zones (control options C, K)

④	Cooling and Current Rating Per Leg (See chart below)
0 =	Natural convection standard DIN-rail or panel heat sink
1 =	Fan cooled 120VAC standard DIN-rail or panel heat sink
2 =	Fan cooled 240VAC standard DIN-rail or panel heat sink
3 =	Fan cooled 24VDC standard DIN-rail or panel heat sink
T =	Natural convection through-wall or cabinet heat sink (NEMA 4X)

⑤ ⑥	Line and Load Voltage
02 =	24 to 48VAC (control options C, F, K)
12 =	100 to 120VAC (control options L, P, S)
20 =	200 to 208VAC (control options L, P, S)
24 =	100 to 240VAC (control options C, F, K); 230 to 240VAC (control options L, P, S)
27 =	277VAC (control options L, P, S)
40 =	400VAC (control options L, P, S)
48 =	480VAC (control options L, P, S)
60 =	277 to 600VAC (control options C, F, K); 600VAC (control options L, P, S)

⑦ ⑧	Control
C0 =	4.5 to 32VDC input, contactor output
F0 =	4 to 20mA DC input, variable time-base output
K1 =	22 to 26VAC input, contactor output
K2 =	100 to 120VAC input, contactor output
K3 =	200 to 240VAC input, contactor output
L (0 to 5) =	Phase angle output with current limiting* (single-phase only)
P (0 to 5) =	Phase angle output* (single-phase only)
S (0 to 5) =	Single-cycle variable time-base output
	0 = 4 to 20mA input
	1 = 12 to 20mA input (option S only)
	2 = 0 to 20mA input
	3 = 0 to 5VDC input
	4 = 1 to 5VDC input
	5 = 0 to 10VDC input

* Not CE approved for conducted or radiated emissions.

⑨	Alarm
0 =	No alarm
S =	Shorted SCR alarm (not available with control options L or P)
H =	Open-heater and shorted-SCR alarm (control option S only)

⑩	User Manual
0 =	English
1 =	German
2 =	Spanish
3 =	French

⑪ ⑫	Custom Options
00 =	Standard part
1X =	1-second soft start (control options P, L)
XX =	Any letter or number, custom options, labeling, etc.

DIN-A-MITE C Current Rating Table

Phase	Cooling	Current at 122°F (50°C)
1	0	55A
1	T	60A
1	1, 2, 3	75A
2, 8	0	40A
2, 8	T	46A
2, 8	1, 2, 3	65A
3, 9	0	30A
3, 9	T	35A
3, 9	1, 2, 3	55A

DIN-A-MITE® D

The DIN-A-MITE® D silicon controlled rectifier (SCR) power controller provides an inexpensive, versatile product for controlling heat in an efficient package. This controller is designed and manufactured with the quality features expected from Watlow. The mounting footprint matches that of the industry standard mercury displacement relay (MDR), but there is no need to worry about mercury, the DIN-A-MITE controller is mercury free.

The DIN-A-MITE Style D is capable of zero cross switching up to 100 amperes single-phase, at 600VAC at 86°F (30°C), depending on the model selected. Combining the input of two or three controllers allows control of three-phase loads. The controller is completely touch-safe and includes on-board, front-accessible, semiconductor fuses. Options include a current transformer for load current monitoring and a shorted output alarm. The controller is UL® 508, C-UL® and CE approved making it ideal for panels and cabinets that require agency approvals.

Variable time-base, 4-20mA process control and VAC/VDC input contactor options are available. All options are model number dependent and factory configurable. This power controller also includes 200KA short circuit current rating (SCCR) tested up to 480VAC to minimize damage in the event of a short circuit when used with required fusing.

Watlow's DIN-A-MITE D is available through Watlow ***SELECT***®, a program that enables you to quickly identify, configure and receive your thermal products faster and easier than ever before. With ***SELECT***, you use a variety of tools to guide your decision, configure products for an exact fit and quickly receive your order.



Features and Benefits

200KA SCCR with proper fusing
- Minimizes damage in the event of a short circuit

Standard panel mount
- Provides same mount as industry standard 100A MDR

Compact size
- Reduces panel space and cost

Touch-safe terminals
- Increases safety for installer and user

Mercury free
- Assures environmental safety

Faster switching with solid state
- Saves energy and extends heater life

UL® 508 listed, C-UL®, RoHS and CE with filter
- Meets applications requiring agency approval
- Reduces end product documentation

Back-to-back SCR design
- Ensures a rugged design

On-board semiconductor fusing
- Provides quick access with no extra mounting necessary

DIN-A-MITE D

Specifications

Amperage
- See the Output Rating Curve below
- Max. surge current for 16.6ms, 1,800A peak
- Latching current: 500mA min.
- Holding current: 200mA min.
- Power dissipation is 1.4 watts per ampere switched including on-board fusing
- 200KA SCCR, Type 1 and 2 approved with the recommended fusing; see user manual

Line Voltage
- 24 to 48VAC units: 20VAC min. to 53VAC max.
- 100 to 240VAC units: 48VAC min. to 265VAC max.
- 277 to 480VAC units: 85VAC min. to 528VAC max.
- 277 to 600VAC units: 85VAC min. to 660VAC max.
- 50/60Hz independent ±5%

Control Mode, Zero Cross
- Control option C: VDC input, contactor output
- Control option K: VAC input, contactor output
- To increase service life, the cycle time should be less than 3 seconds
- Control option F: 4 to 20mA DC input, variable time-base control output

Control Input
- AC contactor: 24VAC ±10%, 120VAC +10/-25%, 240VAC +10/-25% @ 25 mA max. per controlled leg
- DC contactor: 4.5 to 32VDC: max. current @ 4.5VDC is 8mA per leg
- Loop powered linear current: 4 to 20mA DC: Loop-powered, control option F0 only (requires current source with 8.0VDC available, no more than 2 DIN-A-MITE inputs connected in series)

Shorted SCR Alarm Option
- Alarm state when the input command signal off and a 15A or more load current is detected by the current transformer

Alarm Output
- Energizes on alarm, non-latching
- Triac 24 to 240VAC external supply with a current rating of 300mA @ 77°F (25°C)

Current Sensing
- On-board current transformer (CT), typically 0.2VAC output signal per ampere sensed into 1,000Ω load

Agency Approvals
- CE with proper filter:
  204/108/EC Electromagnetic Compatibility Directive
  EN 61326-1: Industrial Immunity Class A Emissions
  Not suitable for Class B emissions environment
  2006/95/EC Low Voltage Directive
  EN 50178 Safety Requirements
- c UL us LISTED UL® 508-listed and C-UL® File E73741

Control Input Terminals
- Compression: Will accept 26 to 12 AWG (0.13 to 3.3 mm^2) wire

Line and Load Terminals
- Compression: Will accept 6 to 2 AWG (13.3 to 33.6 mm^2) wire

Operating Environment
- Operating temperature range: -4 to 176°F (-20 to 80°C)
- 0 to 90% RH (relative humidity), non-condensing
- Vibration: 2 g, 10Hz to 150Hz, applied in any 1 of 3 axes
- Storage temperature: -40 to 185°F (-40 to 85°C)
- Insulation tested to 3,000 meters
- Installation Category III, pollution degree 2

Mounting
- Back-panel mounting; fits the same mounting pattern as a 100A, single-phase mercury displacement relay
- On-board semiconductor fusing

Dimensions
- 7.3 in. (185 mm) high x 2.6 in. (66 mm) wide x 9.4 in. (239 mm) deep
- Weight: 6.5 lb (2.95kg)

Specifications are subject to change without notice.

Output Rating Curve

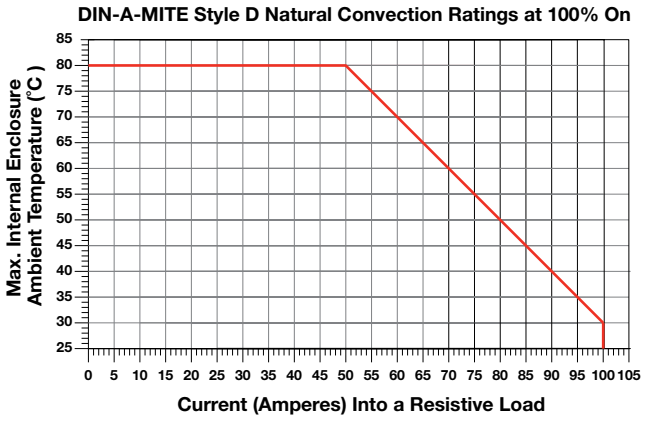

DIN-A-MITE D

Ordering Information

Part Number

①	②	③	④		⑤ ⑥	⑦ ⑧		⑨	⑩	⑪ ⑫
		Phase	Cooling & Current Rating		Line & Load Voltage	Control		Current Sensing or Alarm	User Manual	Custom Options
D	D	1	0	-			-			

③	Phase
1 =	1-phase, 1 controlled leg

④	Cooling and Current Rating (See rating curve)
0 =	Natural convection

⑤ ⑥	Line and Load Voltage
02=	24 to 48VAC
24 =	120 to 240VAC
48 =	277 to 480VAC
60 =	277 to 600VAC

⑦ ⑧	Control
C0 =	4.5 to 32VDC input, contactor output
F0 =	4 to 20mA DC input, variable time-base output
K1 =	22 to 26VAC input, contactor output
K2 =	100 to 120VAC input, contactor output
K3 =	200 to 240VAC input, contactor output

⑨	Current Sensing or Alarm
0 =	No alarm
1 =	Load current transformer
S =	Shorted SCR alarm

⑩	User Manual
0 =	English
1 =	German
2 =	Spanish
3 =	French

⑪ ⑫	Custom Options
00 =	Standard part

Replacement Semiconductor Fuse

Watlow Part Number	Cooper Bussmann® Part Number
0808-0096-0000	170N3437

Solid State Relays (SSR)

Watlow solid state relays (SSR) offer many of the advantages of solid state power controllers, yet at a lower cost. Watlow's extensive knowledge in power controller design has led to the development of a special fast cycle input card that enables a SSR to operate from a standard 4-20mA instrumentation command signal. Test results have shown that a zero cross SSR in combination with the fast cycle card promotes better temperature control and longer heater life than slow cycle relays. Through a time proportional cycle rate of one tenth of a second heater life will be extended.

Both low and high voltage models are available from 24 up to 530VAC. All ac output models include back-to-back Silicon Controlled Rectifiers (SCRs) for a more rugged design than the traditional triac based SSR. The internal design allows it to handle high currents and the harsh electrical environments of heavy industry. Watlow also offers a switched VDC model for dc heating applications.

Watlow can provide all the components necessary for trouble-free operation. This includes two standard convenience items: A thermal foil to ensure proper thermal transfer from the relay to the heat sink and belville washers that ensure the relay is mounted with sufficient pressure for good heat transfer. Matched semiconductor fuses and heat sinks are available to complete the power switching package.



Features and Benefits

Fast cycle card
- Increases heater life
- Optimizes temperature control
- Allows for higher watt density heaters

Zero cross firing
- Results in minimal electrical noise

Back-to-back SCR design
- Withstands harsh or hostile industrial environments

UL® recognized File #E151484 and #E73741
CSA certified up to 600VAC, File #LR700195
VDE 60950 License #40021401, File #1995500
up to 480VAC, CE - EN 60950 and RoHS
- Meets applications requiring agency approval

Solid State Relays (SSR)

Specifications

Specifications Standard To All SSRs:	
Dielectric Strength (Volts)	4000 RMS
Input, DC Control	
Voltage range	3-32VDC
Typical input current	3.4 to 20mA
Turn on voltage (max.)	3VDC
Turn off voltage (min.)	1VDC
Input, AC Control	
Voltage range	90-280VAC
Typical input current	2mA (typical) @ 120VAC 4mA (typical) @ 240VAC
Turn on voltage (max.)	90VAC
Turn off voltage (min.)	10VAC
AC Output (Max.)	
Forward voltage drop	1.5VAC and 2.1VDC
Min. holding current (mA)	50mA
Turn on-off time (ms)	up to 10ms (max.)
Frequency range	47 to 63Hz

Ambient Temperature Operating Curve

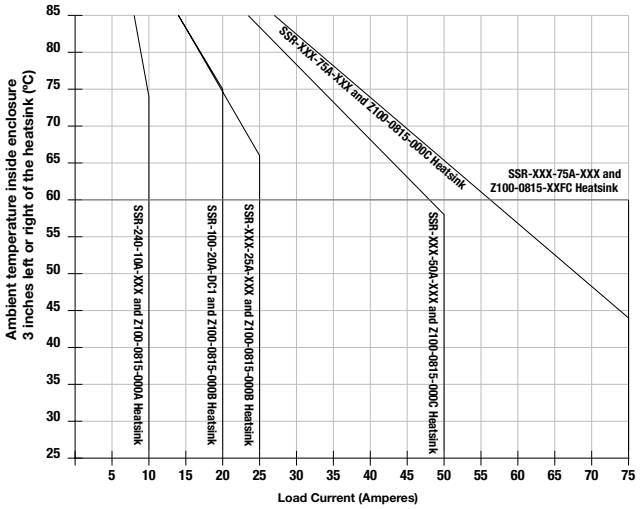

120/240VAC						
Model Number	**SSR-240-10A-DC1**	**SSR-240-25A-DC1**	**SSR-240-50A-DC1**	**SSR-240-10A-AC1**	**SSR-240-25A-AC1**	**SSR-240-50A-AC1**
Current output	10A	25A	50A	10A	25A	50A
Nominal voltage	120/240VAC	120/240VAC	120/240VAC	120/240VAC	120/240VAC	120/240VAC
One cycle surge current	120A	250A	625A	120A	250A	625A
Max. I^2t for fusing	$60A^2$ seconds	$260A^2$ seconds	$1,620A^2$ seconds	$60A^2$ seconds	$260A^2$ seconds	$1,620A^2$ seconds
Thermal resistance	1.48° C/W	1.05° C/W	0.63° C/W	1.48° C/W	1.05° C/W	0.31° C/W
Ambient operating temperature	-40 to 176°F (-40 to 80°C)	-40 to 176°F (-40 to 80°C)	-40 to 176°F (-40 to 80°C)	-40 to 176°F (-40 to 80°C)	-40 to 176°F (-40 to 80°C)	-40 to 176°F (-40 to 80°C)
Output (Max.)						
Voltage range	48-280VAC	48-280VAC	48-280VAC	48-280VAC	48-280VAC	48-280VAC
Over voltage rating	600V (peak)	600V (peak)	600V (peak)	600V (peak)	600V (peak)	600V (peak)
Off state leakage	10mA	10mA	10mA	10mA	10mA	10mA

120/240VAC			Random Fired Models			100VDC
Model Number	**SSR-240-75A-DC1**	**SSR-240-75A-AC1**	**SSR-480-50A-RND**	**SSR-480-75A-RND**	**SSR-240-10A-RND**	**SSR-100-20A-DC1**
Current output	75A	75A	50A	75A	10A	20A
Nominal voltage	120/240VAC	120/240VAC	480VAC	480VAC	120/240VAC	100VDC
One cycle surge current	1000A	1000A	625A	1000A	120A	42A (10ms)
Max. I^2t for fusing	$6000A^2$ seconds	$6000A^2$ seconds	$1,620A^2$ seconds	$6000A^2$ seconds	$60A^2$ seconds	N/A
Thermal resistance	0.31° C/W	0.31° C/W	0.63° C/W	0.31° C/W	1.48° C/W	1.06° C/W
Ambient operating temperature	-40 to 176°F (-40 to 80°C)	-40 to 176°F (-40 to 80°C)	-40 to 176°F (-40 to 80°C)	-40 to 176°F (-40 to 80°C)	-40 to 176°F (-40 to 80°C)	-4 to 176°F (-20 to 80°C)
Output (Max.)						
Voltage range	48-280VAC	48-280VAC	80-530VAC	80-530VAC	48-280VAC	0-100VDC
Over voltage rating	600V (peak)	600V (peak)	1200V (peak)	1200V (peak)	600V (peak)	N/A
Off state leakage	10mA	10mA	10mA	10mA	10mA	0.3mA VDC

480 VAC						
Model Number	**SSR-480-25A-DC1**	**SSR-480-50A-DC1**	**SSR-480-75A-DC1**	**SSR-480-25A-AC1**	**SSR-480-50A-AC1**	**SSR-480-75A-AC1**
Current output	25A	50A	75A	25A	50A	75A
Nominal voltage	480VAC	480VAC	480VAC	480VAC	480VAC	480VAC
One cycle surge current	250A	625A	1000A	250A	625A	1000A
Max. I^2t for fusing	$260A^2$ seconds	$1,620A^2$ seconds	$6,000A^2$ seconds	$260A^2$ seconds	$1,620A^2$ seconds	$6,000A^2$ seconds
Thermal resistance	1.02° C/W	0.63° C/W	0.31° C/W	1.02° C/W	0.63° C/W	0.31° C/W
Ambient operating temperature	-40 to 176°F (-40 to 80°C)	-40 to 176°F (-40 to 80°C)	-40 to 176°F (-40 to 80°C)	-40 to 176°F (-40 to 80°C)	-40 to 176°F (-40 to 80°C)	-40 to 176°F (-40 to 80°C)
Output (Max.)						
Voltage range	48-530VAC	48-530VAC	48-530VAC	48-530VAC	48-530VAC	48-530VAC
Over voltage rating	1200V (peak)	1200V (peak)	1200V (peak)	1200V (peak)	1200V (peak)	1200V (peak)
Off state leakage	10mA	10mA	10mA	10mA	10mA	10mA

Solid State Relays (SSR)

Heater Life

Watlow has extensively tested electric heating elements with a variety of power switching devices. Results prove that the life of an electric element dramatically increases when the on-off cycle time that is used to time-proportion the heater is kept at less than one second. This reduces the thermal expansion and contraction of the element and improves heater life as much as 20 times. This very fast cycle time controls temperature much more accurately and allows the use of higher watt density heating elements.

Fast Cycle Card

In order to obtain the very rapid cycling time required for longer heater life, accurate temperature control and higher watt densities, Watlow has developed a loop-powered firing card for SSRs. This card operates from a standard instrumentation signal of 4 to 20mA and controls solid state relays with a time proportional cycle rate of less than one second (4VAC cycles on and 4VAC cycles off at 50 percent power).

Thermal Transfer

A thermal foil is provided with each solid state relay for mounting on the base of the relay to improve heat transfer. In addition, two belville washers are supplied to provide the proper pressure for this transfer of heat. Use two #8-32 screws 0.625 in. (16 mm) long to secure the relay to the heat sink.

Replacing Contactors or Mercury Displacement Relays (MDRs)

Improvements in heater life and control accuracy can be achieved with SSRs operated with rapid cycle times as compared to slower operating electromechanical relays or even MDRs. When replacing these types of relays with the SSR, it is important to consider two aspects:

1. Heat

Solid state devices require a small voltage to turn on, which is consumed as heat (approx. 1.5 volts x amps = watts). This heat must be removed from the device and is usually accomplished by mounting the relay on a heat sink.

2. Failure Mode

Solid state devices should last for many years when properly protected with voltage snubbers, mounted on appropriate heat sinks and when fused with semiconductor fuses against the high currents caused by electrical shorts. Watlow's SSRs include an internal voltage snubber. However, if the unit fails, the most probable condition will be a short. Mechanical relays also have a good probability of failing short. In all cases where uncontrolled full power can cause damage, it is recommended that a high limit temperature controller and contactor be used for protection.

Wiring Diagrams

Single-Phase Fast Cycle Input Card

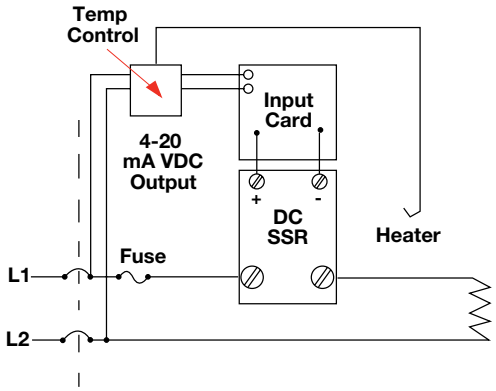

Shorted SSR Alarm

The most prevalent concern when using solid state relays is the possibility of a relay failing in a shorted condition. With this in mind, Watlow has designed a cost effective "Shorted SSR Alarm."

The device monitors the output (current through the heater) and activates a triac (alarm) if there is no command signal from the temperature controller. The triac can be wired to a bell, or to a normally closed latching relay to remove power to the heater.

The shorted SSR alarm is not a substitute for an agency-approved high-temperature limit device.

Single-Phase Shorted SSR Detector

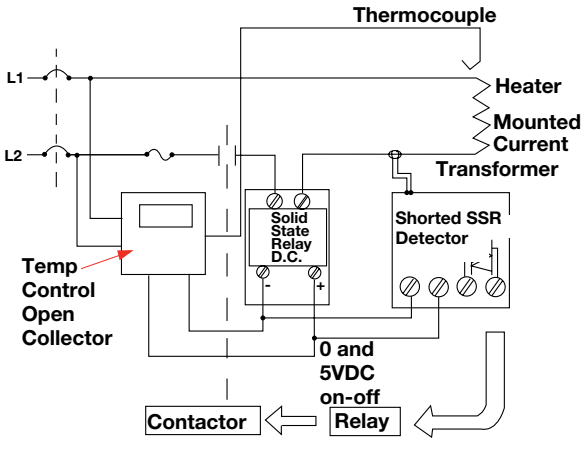

Note: Semiconductor power switching devices are not legal for over temperature limit or safety devices. For limit and safety devices you must have a positive mechanical break of all electrically hot legs simultaneously.

Solid State Relays (SSR)

Dimensions - Heat Sink

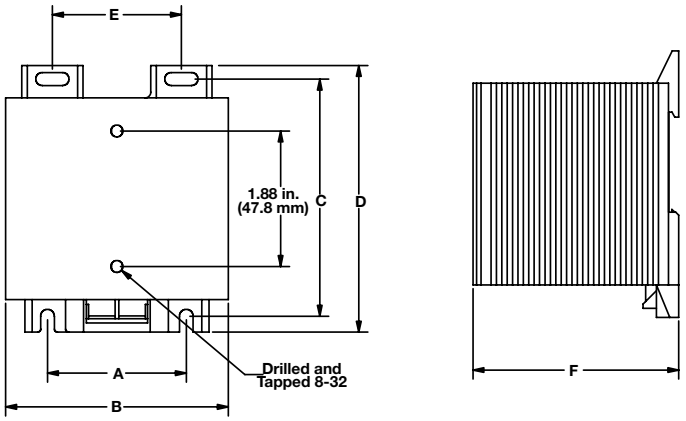

Dimensions - Solid State Relay

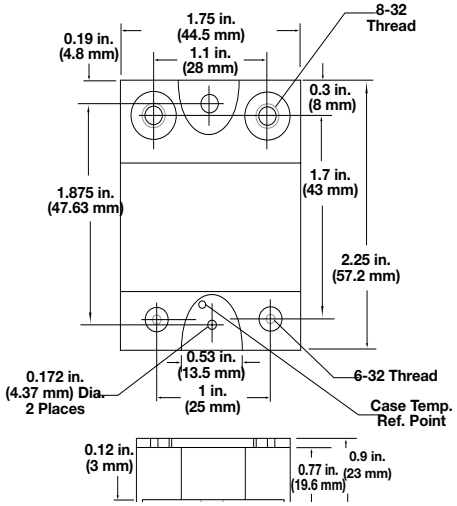

Heat Sink Dimensions by Part Number

Part Number	Descriptor	Dimensions											
		A		B		C		D		E		F	
		in.	(mm)	in.	(mm)	in.	(mm)	in.	(mm)	in.	(mm)	in.	(mm)
Z100-0815-000A	18A	N/A		1.8	(46)	3.25	(82.6)	3.7	(94)	N/A		1.9	(48)
Z100-0815-000B	35A	1.91	(48.5)	3.2	(81)	3.25	(82.6)	3.7	(94)	1.81	(46)	2.9	(74)
Z100-0815-000C	55A	1.89	(48)	3.2	(81)	5.45	(138.4)	5.89	(149.6)	1.81	(46)	3.6	(91)
Z100-0815-XXFC*	75A	1.89	(48)	3.2	(81)	5.45	(138.4)	7.16	(181.9)	1.81	(46)	3.6	(91)

*Fan cooled

Ordering Information

Part Number

① ② ③		④ ⑤ ⑥		⑦ ⑧		⑨		⑩ ⑪ ⑫
SSR	-	Voltage	-	Current	-	A	-	Control Voltage

④ ⑤ ⑥	Voltage
100 =	0 to 100VDC (20A model only)
240 =	48 to 240VAC
480 =	48 to 530VAC

⑦ ⑧	Current
10 =	10A
20 =	20A (100VDC model only)
25 =	25A
40 =	40A
50 =	50A
75 =	75A

⑩ ⑪ ⑫	Control Voltage
DC1 =	3 to 32VDC (see specifications)
AC1 =	90 to 280VAC
RND =	3 to 32VDC (10, 50 and 75A models only)

Note: Relay will also include thermal foil, 2 belville washers and #8-32 screws for mounting to a heat sink.

Heat Sinks (sold separately)	
Z100-0815-000A =	18A or 2.2°C/watt
Z100-0815-000B =	35A or 1.1°C/watt
Z100-0815-000C =	55A or 0.6°C/watt
Z100-0815-12FC =	75A or 0.16°C/watt (120VAC fan)
Z100-0815-24FC =	75A or 0.16°C/watt (240VAC fan)

Fast Cycle Input Card and Shorted SSR Alarm Card	
For direct mounting on zero cross dc input solid state relay.	
RPC-5399-42-000 =	Fast cycle input card, 4 to 20mA input
RPC-5386-0000 =	Shorted SSR alarm card

Sub Cycle Fuses - I^2T (sold separately)
Recommended and available with holders.

PM LEGACY™

The PM LEGACY™ series panel mount controller is an industry leading PID controller that allows optimal performance utilizing simple control and menu functionality without complex features. It is ideally suited for basic applications and usage levels.

The LEGACY includes one universal input and an option for up to two outputs and is available in 1/32, and 1/16 DIN panel mount packages. It can be ordered as a PID process controller or as a dedicated over and under-temperature limit controller.



Features and Benefits

Simplified menu
- Fits basic applications with a user-friendly interface supported by two menus and a streamlined list of parameters
- Eliminates user complexity often experienced with more advanced controllers and unnecessary features
- Reduces user training costs and user programming errors

PID auto-tune
- Provides auto-tune for fast, efficient start-up

Standard bus communications
- Allows easy product configuration via PC communications protocol and free software
- Saves time, simplifies programming process and improves reliability of controller setup

Factory Mutual (FM) approved over and under limit with auxiliary outputs
- Increases user and equipment safety for over and under-temperature conditions

Touch-safe package
- Increases installer and operator safety
- Complies with IP2X requirements

EZ-LINK™ mobile application for iPhone® and Android™
- Expedites controller setup with intuitive navigation
- Simplifies setting parameters with plain text names and descriptions
- Connects quickly and easily via Bluetooth® wireless communications

SMOOTH TOUCH™ keypad
- Eliminates contamination points on the front of the controller
- Prevents premature failure of mechanical components
- Creates a better seal on front panel
- Ensures an easy to clean surface

Agency approvals: UL® listed, CSA, CE, RoHS, W.E.E.E., FM, SEMI F47-0200, Class 1, Div. 2 rating on selected models
- Assures prompt product acceptance
- Reduces end product documentation costs

P3T armor sealing system
- Complies to NEMA 4X, IP66 and IP67 specifications
- Allows controller to be cleaned and washed
- Certified UL® 50 independent to NEMA 4X specification

Consistent Termination Labeling (CTL) connection system
- Simplifies switching between products
- Speeds up user's system documentation

Three-year warranty
- Demonstrates Watlow's reliability and product support

High-amperage power control output (1/16 DIN only)
- Drives 15 ampere resistive loads direct
- Reduces component count
- Saves panel space and simplifies wiring
- Reduces cost of ownership

PM LEGACY

Specifications

Line Voltage/Power

- 85 to 264VAC, 47 to 63Hz
- 20 to 28VAC, +10/-15%; 50/60Hz, ±5%
- 12 to 40VDC
- 10VA (1/32 and 1/16 DIN)
- Data retention upon power failure via non-volatile memory
- Compliant SEMI F47-0200, Figure R1-1 voltage sag requirements @ 24VAC or higher

Environment

- 0 to 149°F (-18 to 65°C) operating temperature
- -40 to 185°F (-40 to 85°C) storage temperature
- 0 to 90% RH, non-condensing

Accuracy

- Calibration accuracy and sensor conformity: ±0.1% of span, ±1°C @ the calibrated ambient temperature and rated line voltage
  - Type S: 0.2%
  - Type T below -50°C: 0.2%
- Calibration ambient temperature @ 77°F ±5°F (25°C ±3°C)
- Accuracy span: 1000°F (540°C) min.
- Temperature stability: ±0.1°F/°F (±0.1°C/°C) rise in ambient max.

Agency Approvals

- cULus® UL®/EN/CSA C22.2 No 61010-1 Listed, File E185611
- CSA C22.2 No. 24, File 158031
- UL® 50 4X indoor locations, NEMA 4X, IP66, IP67 front seal
- cULus® ANSI/ISA 12.12.01-2007, CSA-C22.2 No. 213-1987, Class 1, Div. 2, Groups A, B, C and D, temperature code T4A, File E184390 (optional)
- CE, RoHS by design, W.E.E.E.
- FM Class 3545 (limit controls)

Controller

- User selectable heat/cool, on-off, P, PI, PD, PID or alarm action, not valid for limit controllers
- Auto-tune with control algorithm
- Control sampling rates: Input = 10Hz, outputs = 10Hz
- Input and output capacity per controller type ordering information

Serial Communications

- Isolated communications
- Standard bus configuration protocol

Wiring Termination—Touch-Safe Terminals

- Input, power and controller output terminals are touch safe removable 12 to 22 AWG

Universal Input

- Thermocouple, grounded or ungrounded sensors, greater than 20MΩ input impedance, 2kΩ source resistance max.
  - Non-isolated to switched dc and process output
- RTD 2- or 3-wire, platinum, 100Ω @ 0°C calibration to DIN curve (0.00385 Ω/Ω/°C)
- Process, 4-20mA @ 100Ω, or 0-10VDC @ 20kΩ input impedance; scalable

Functional Operating Range

Type J: -346 to 2192°F (-210 to 1200°C)
Type K: -454 to 2500°F (-270 to 1371°C)
Type T: -454 to 750°F (-270 to 400°C)
Type E: -454 to 1832°F (-270 to 1000°C)
Type N: -454 to 2372°F (-270 to 1300°C)
Type C: 32 to 4200°F (0 to 2315°C)
Type D: 32 to 4200°F (0 to 2315°C)
Type F: 32 to 2449°F (0 to 1343°C)
Type R: -58 to 3214°F (-50 to 1767°C)
Type S: -58 to 3214°F (-50 to 1767°C)
Type B: 32 to 3300°F (0 to 1816°C)
RTD (DIN): -328 to 1472°F (-200 to 800°C)
Process: -1999 to 9999 units

Output Hardware

- Switched dc = 22 to 32VDC @ 30mA
- Open collector = 30VDC max. @ 100mA max. current sink
- Solid state relay (SSR), Form A, 0.5A @ 24VAC min., 264VAC max., opto-isolated, without contact suppression
- Electromechanical relay, Form C, 24 to 240VAC or 30VDC max., 5A resistive load, 100,000 cycles at rated load
- Electromechanical relay, Form A, 24 to 240VAC or 30VDC max., 5A resistive load, 100,000 cycles at rated load
  - Output 2 is limit for limit models
- NO-ARC relay, Form A, 24 to 240VAC, 15A @ 122°F (50°C), resistive load, no VDC, 2 million cycles at rated load
- Universal process output: Range selectable; 0 to 10VDC ±15mV into a min. 1,000Ω load with 2.5mV nominal resolution; 4 to 20mA ±30µA into max. 800Ω load with 5µA nominal resolution; temperature stability 100ppm/°C

Operator Interface

- Dual 4 digit, 7 segment LED displays
- Typical display update rate 1Hz
- Advance, infinity (RESET), up and down keys plus a FUNCTION KEY (not available in 1/32 DIN)
- Infinity key is also labeled RESET on limit control models
- FUNCTION KEY on 1/16 DIN package automatically programmed as an auto/manual transfer mode function on PID models

PM LEGACY

Typical Block Diagram

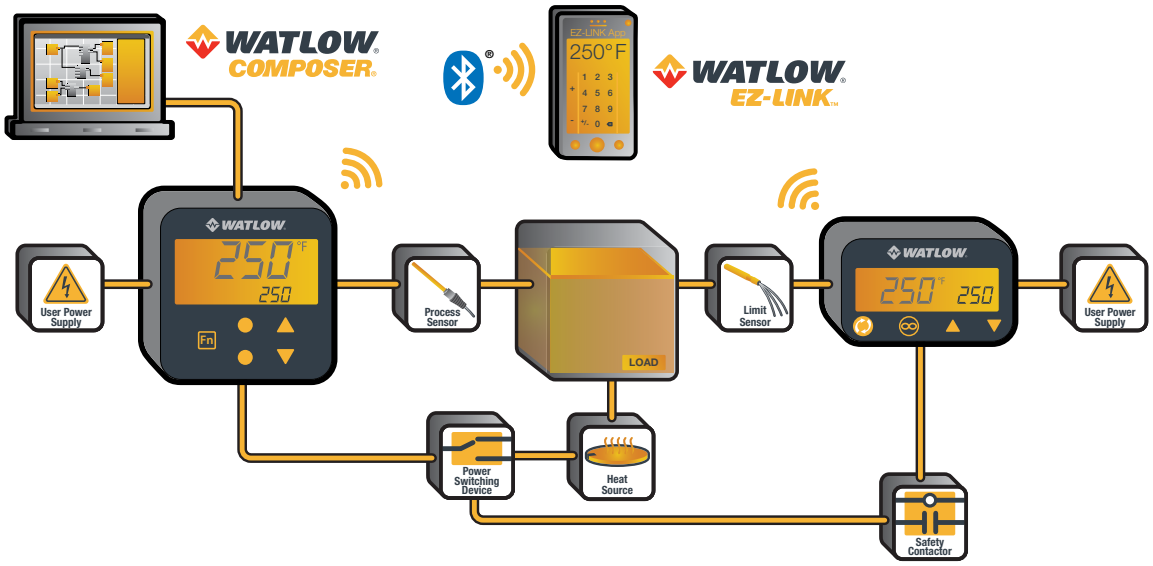

Dimensional Drawings

PM LEGACY 1/32 DIN

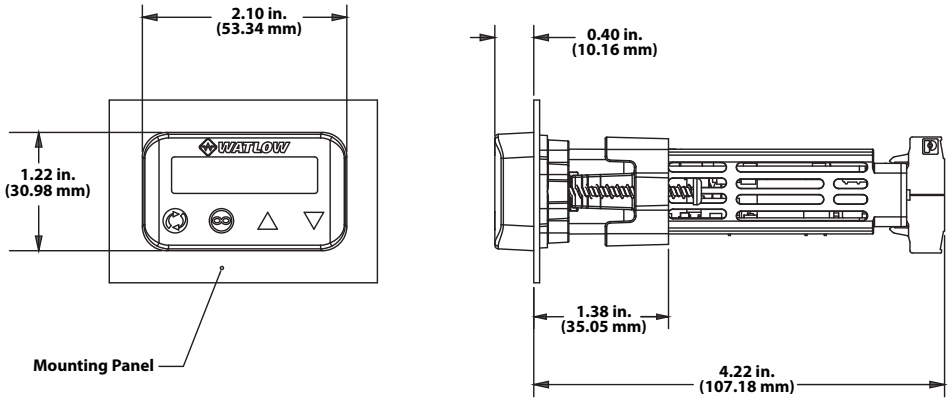

PM LEGACY 1/16 DIN

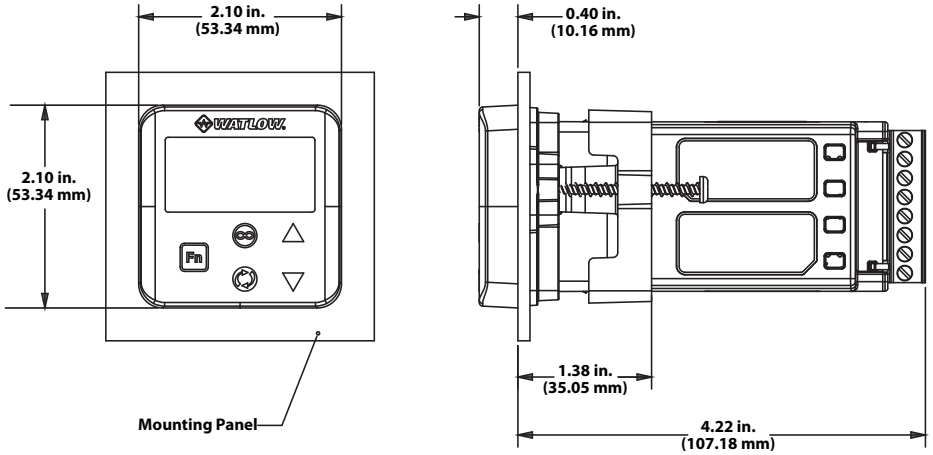

PM LEGACY

Comparison of Available Features

	1/32 DIN	1/16 DIN
PID Loops	1	1
Profile Ramp/Soak	40 total steps	None
Full Menu	Yes	None
Express Menu	Yes	Yes
Number of Digital Inputs/Outputs	0 to 2	0 to 2
Number of Outputs	1 to 4	1 to 6
Integrated Limits	None	None
Discrete Limit	Yes	Yes
Maximum Power Output	5A mechanical relay	15A NO-ARC
Current Measurement	None	None
Standard Bus Communications	Yes	Yes
Bluetooth® Technology	Yes	Yes
Field Bus Communications	Modbus® RTU 485	Limit only
Countdown Timer	Yes	None

Compatible Accessories

More information is available on these products at www.watlow.com

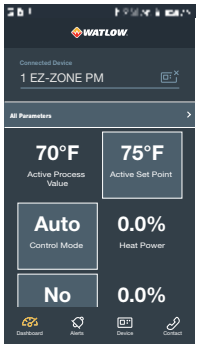

Watlow's new EZ-LINK™ app allows users to easily setup, monitor and adjust Watlow PM LEGACY controllers via Bluetooth®. The app is available free-of-charge from the app store for phones and tablets, and provides access to the controller's parameters with fully spelled out names in plain text with help topics that explain each parameter and option. EZ-LINK mobile application connects quickly and easily via Bluetooth® wireless communications. Download the EZ-Link App for iPhone®. at Google Play or Android™ or App Store



SpecView is designed for industrial users with features such as data logging, trending and support for bar code readers and touch screens. Errors are reduced, for any process, by creating application-specific screens. The software provides a historical replay option, easy-to-use recipe features and remote access options, including LAN, Internet and modem.



COMPOSER® is Watlow's easy-to-use software for configuring and customizing controllers. Use it to optimize Watlow's F4T®, PM LEGACY and EZ-ZONE® RM controllers for specific applications. Task-specific views simplify all aspects of commissioning new controllers including managing the inputs and outputs from pluggable flex modules, setting up functions such as control loops and alarms and creating and editing profiles. COMPOSER software is available for download at www.watlow.com.



Silver Series EM touch screen operator interface terminals provide a customizable user interface, email event notifications and log and graph data for Watlow controllers and other devices. A Silver Series EM operator interface teminal paired with Watlow controllers is the perfect solution for your industrial process or machine control application.

PM LEGACY

PM LEGACY Control Configuration Information

Part Number

① ②	③	④	⑤	⑥ ⑦	⑧	⑨ ⑩ ⑪	⑫	⑬ ⑭
PM	Package Size	Primary Functions	Power Supply, Digital I/O	Output 1 and 2 Hardware Options	Comm. Options	Future Options	Model Selection	Customs Options
						AAA		

③	Power Supply
3 =	1/32 DIN
6 =	1/16 DIN

④	Primary Functions
C =	PID controller with universal input
R =	PID controller with universal input and profiling ramp/soak **(Not available on 1/16 DIN or Express version)**
T =	PID controller with universal input and countdown timer **(Not available on 1/16 DIN or Express version)**
J =	PID controller with thermistor input **(Not available on 1/16 DIN or Express version)**
N =	PID controller with thermistor input and profiling ramp/soak **(Not available on 1/16 DIN or Express version)**

⑤	Power Supply, Digital Inputs/Outputs (I/O)
1 =	100 to 240VAC
2 =	100 to 240VAC plus 2 digital I/O points **(Not available on 1/16 DIN or Express version)**
3 =	20 to 28VAC or 12 to 40VDC
4 =	20 to 28VAC or 12 to 40VDC, plus 2 digital I/O points **(Not available on 1/16 DIN or Express version)**

⑥ ⑦	Output 1 and 2 Hardware Options	
	Output 1	**Output 2**
CA =	Switched dc/open collector	None
CH*=	Switched dc/open collector	NO-ARC 15A power control
CC =	Switched dc/open collector	Switched dc
CJ =	Switched dc/open collector	Mechanical relay 5A, Form A
CK =	Switched dc/open collector	SSR Form A, 0.5A
EA =	Mechanical relay 5A, Form C	None
EH*=	Mechanical relay 5A, Form C	NO-ARC 15A power control
EC =	Mechanical relay 5A, Form C	Switched dc
EJ =	Mechanical relay 5A, Form C	Mechanical relay 5A, Form A
EK =	Mechanical relay 5A, Form C	SSR Form A, 0.5A
FA =	Universal process	None
FC =	Universal process	Switched dc
FJ =	Universal process	Mechanical relay 5A, Form A
FK =	Universal process	SSR Form A, 0.5A
AK =	None	SSR Form A, 0.5A
KH*=	SSR Form A, 0.5A	NO-ARC 15A power control
KK =	SSR Form A, 0.5A	SSR Form A, 0.5A

*CH, EH, KH - Not available with the 1/32 DIN (PM3) package size.

⑧	Communication Options
Standard bus always included	
A =	None
B =	Bluetooth®
E =	EIA-485 Modbus® RTU and Bluetooth® **(Not available on 1/16 DIN or Express version)**
1 =	EIA-485 Modbus® RTU **(Not available on 1/16 DIN or Express version)**
Note: Bluetooth® not available in all countries, contact factory.	

⑫	Model Selection
N =	PM LEGACY Version **(Only available in PM3) (Input 1 always isolated)**
H =	PM LEGACY EXPRESS Version **(Available in PM3 or PM6) (Input 1 always isolated)**

⑬ ⑭	Custom Options
WP =	Watlow logo face plate
WN =	No logo/no name face plate
AG =	Conformal coating
12 =	Class 1, Div. 2 (not available with mechanical relay Output Types E, H or J)

EZ-ZONE® RM

The EZ-ZONE RM controller simplifies thermal system management. The EZ-ZONE RM controller family is comprised of six module types: An integrated on-off or PID control, monitoring and over/under temperature limit module, a high-density on-off or PID control module, a high-density limit only module, an input/output (I/O) expansion module, a high-density monitor/scanner module and a data logging and field communications access module. A system is configured by connecting any combination of module types to address specific application needs. The EZ-ZONE RM is extremely flexible and scalable allowing mixing and matching of I/O to configure one to 152 control loops and up to 256 monitor points.

Now Watlow's EZ-ZONE RM is available through Watlow ***SELECT***®, a program that enables you to quickly identify, configure and receive your thermal products faster and easier than ever before. Visit www.watlow.com/select to learn more.

Optional integrated controller functions can be combined or ordered in different quantities:

- PID control loops
- Over/under temperature limit control loops
- 10 and 15 ampere power output/heater driver options
- On-board data logging
- Current measurement input
- Sequencer start up and control function
- Programmable timer and counter functions
- Programmable math and logic options
- Multiple communication protocol options
- Mobile configuration with removable secure digital (SD) flash card

Benefits of using an integrated controller solution:

- Reduces wiring time and termination complexity compared with connecting multiple discrete products
- Improves system reliability
- Reduces termination and installation cost
- Eliminates compatibility issues often encountered with using various discrete components and brands
- Reduces troubleshooting time and downtime costs because the system can specifically identify any problems with a sensor, controller, solid state relay (SSR) power output or heater load
- Complete thermal solution saves engineering time and labor costs while shortening project schedules



Features and Benefits

Multiple inputs; from one to 152 PID loops of control or monitor up to 256 analog inputs

- Mix and match I/O to fit any application; from one input with two outputs to 152 analog inputs with 152 outputs, or monitor up to as many as 256 analog inputs all in one system
- Reduces cost because only required loops are purchased
- Allows a common controller platform across many design applications as both loops and outputs can be ordered in single increments

Advanced PID control algorithm

- Offers TRU-TUNE®+ adaptive control to provide tighter control for demanding applications
- Enables auto-tune for fast, efficient start-up

Communication capabilities

- Provides a range of protocol options including universal serial bus (USB) device port, Modbus® RTU, EtherNet/IP™, Modbus® TCP, DeviceNet™ and PROFIBUS

USB port

- Provides data log retrieval

SPLIT-RAIL control

- Allows modules mounted in separate high-voltage and low-voltage cabinets to function as an integrated system
- Minimizes the length and cost of wire runs and improves system reliability by locating inputs closer to sensors and outputs closer to loads

AUTO CLONE

- Reduces time and configuration complexity by automatically building a new module with the same parameter settings as the replaced module

SENSOR GUARD

- Prevents unplanned process shutdowns and product loss by switching to a backup sensor if the primary sensor fails

EZ-ZONE RM

Additional Key Functions

- Configuration communication port (standard bus)
- Removable modules and connectors
- Ring lug and front-screw terminal options
- Profile ramp soak with 400 total steps
- Retransmit and remote set point input virtually inside controller eliminating costs for input/output hardware
- User configuration settings can be stored and recalled
- Thermistor input
- Elevated operating range of 0 to 149°F (-18 to 65°C)
- UL® listed, CSA, CE, RoHS, W.E.E.E., FM, SEMI F47-0200, Class 1, Div. 2 rating on selected models

Common Specifications (Applies to all models)

Line Voltage/Power

- 20.4 to 30.8VAC/VDC, 50/60Hz ±5%
- Any external power supply used should comply with a Class 2 or SELV rating (see specific module specification listing for max. VA power consumption)
- Data retention upon power failure via non-volatile memory
- Compliant with Semi F47-0200, Figure R1-1 voltage sag requirements

Environment

- 0 to 149°F (-18 to 65°C) operating temperature
- -40 to 185°F (-40 to 85°C) storage temperature
- 0 to 90% RH, non-condensing

Functional Operating Range for RMC, RMH, RML and RMS

Type J: -346 to 2192°F (-210 to 1200°C)
Type K: -454 to 2500°F (-270 to 1371°C)
Type T: -454 to 750°F (-270 to 400°C)
Type E: -454 to 1832°F (-270 to 1000°C)
Type N: -454 to 2372°F (-270 to 1300°C)
Type C: 32 to 4200°F (0 to 2315°C)
Type D: 32 to 4200°F (0 to 2315°C)
Type F: 32 to 2449°F (0 to 1343°C)
Type R: -58 to 3214°F (-50 to 1767°C)
Type S: -58 to 3214°F (-50 to 1767°C)
Type B: 32 to 3300°F (0 to 1816°C)
RTD (DIN): -328 to 1472°F (-200 to 800°C)
Process: -1999 to 9999 units

Agency Approvals

- UL®/EN 61010 Listed, File E185611, C-UL® C22.2 #61010ANSI/ISA 12.12.01-2007 Class 1, Div. 2 - Group A, B, C, D temperature code T4 (optional)
- UL® 1604 Class 1, Div. 2 (optional)
- EN 60529 IP20
- UL® 50, NEMA 4X, EN 60529 IP66; 1/16 DIN remote user interface (RUI)
- CSA 610110 CE
- RoHS by design, W.E.E.E.
- FM Class 3545 on limit control versions
- CE

Serial Communications

- All modules ship with standard bus protocol for configuration and communication with all other EZ-ZONE products

Implicit Messaging

Number of data members accessible through implicit messaging

Protocol	RM System	RMC	RMH	RML	RME	RMS	RMA
EtherNet/IP™	100	20	40	40	20	40	20
DeviceNet™	200	20	40	40	20	40	20

User Interface

- 7-segment LED, address/protocol indicator programmed via push button switch
- Communication activity, 2 LEDs
- Error condition of each loop, 4 LEDs
- Output status indication, 16 LEDs

Maximum System Configuration

- 1 access module plus up to 16 additional control or expansion modules (any combination), up to 152 loops

Mounting

- DIN-rail specification EN50022, 1.38 x 0.30 in. (35 x 7.5 mm)
- DIN-rail mounted or chassis mounted with customer supplied screws

Wiring Termination—Touch-Safe Terminals

- Right angle and front screw type terminal blocks (slots A, B, D, E)
- Input, power and controller output terminals, touch safe, removable, 12 to 30 AWG

EZ-ZONE RM

High-Density Limit Module Specifications (RML)

(Select an RML module for 4 to 12 safety limits.)

Line Voltage/Power

- Power consumption: 7 W, 14VA
- Any external power supply used should comply with a Class 2 or SELV rating

Isolated Serial Communications

- All modules ship with standard bus protocol for configuration and communication with all other EZ-ZONE controllers
- Optional EIA-485, Modbus® RTU

Calibration Accuracy

- ±0.1% of span, ±1°C. See user manual for details

Universal Input

- Thermocouple, grounded or ungrounded sensors
- >20MΩ input impedance
- Max. of 2kΩ source resistance
- RTD 2-wire, platinum, 100Ω and 1000Ω @ 32°F (0°C) calibration to DIN curve (0.00385Ω/Ω/°C)
- Process, 0-20mA @100Ω, or 0-10VDC @ 20kΩ input impedance; scalable, 0-50mV

Thermistor Input

- 0 to 40kΩ, 0 to 20kΩ, 0 to 10kΩ, 0 to 5kΩ
- 2.252kΩ and 10kΩ base at 77°F (25°C)

Digital Input

- Update rate 10Hz
- Max. input 36VDC at 3mA
- Min. high state 3VDC at 0.25mA

Dry Contact Input

- Update rate 10Hz
- Min. open resistance 10kΩ, max. closed resistance 50Ω

Output Hardware

- 6 digital inputs/outputs:
  - Switched dc, max. 20VDC @ 40mA, 12VDC @ 80mA
  - Open collector, max. 32VDC @ 1.5A, max. 8A per 6 outputs combined
- Electromechanical relay, Form A, 5A, 24 to 240VAC or 30VDC max., resistive load, 100,000 cycles at rated load, requires a min. load of 20mA at 24V, 125VA pilot duty

EZ-ZONE RM

High-Density Limit Module Ordering Information

Requires 24 to 28VAC/VDC power supply, includes communication port for configuration with EZ-ZONE configurator and PC.

Part Number

① ② EZ-ZONE Rail Mount	③ Limit Module	④ Connector Style		⑤ Slot A	⑥ Slot B	⑦ Slot D	⑧ Slot E		⑨ Future Option	⑩ Enhanced Options	⑪ ⑫ Additional Options
RM	L		-					-	A		

④	Connector Style/Custom Product
A =	Right angle screw connector (standard)
F =	Front screw connector (slots A, B, D and E only)
S =	Custom

⑤	Slot A
4 =	4 high accuracy thermocouple inputs with limits (defaults to Type K)
5 =	4 universal inputs (T/C, RTD 2-wire, 0-10VDC, 0-20mA) with limit control loops
6 =	4 thermistor inputs with limit control loops

⑥	Slot B
A =	None
4 =	4 high accuracy thermocouple inputs with limits (defaults to Type K)
5 =	4 universal inputs (T/C, RTD 2-wire, 0-10VDC, 0-20mA) with limit control loops
6 =	4 thermistor inputs with limit control loops

⑦	Slot D
A =	None
4 =	4 high accuracy thermocouple inputs with limits (defaults to Type K)
5 =	4 universal inputs (T/C, RTD 2-wire, 0-10VDC, 0-20mA) with limit control loops
6 =	4 thermistor inputs with limit control loops
J =	4 mechanical relay 5A, Form A
C =	6 digital I/O*

⑧	Slot E
J =	4 mechanical relay 5A, Form A
B =	1 digital input and 2 mechanical relays, 5A (1 Form A and 1 Form C)*

⑩	Enhanced Options
A =	Standard bus
1 =	Standard bus and Modbus® RTU 485* (user-selectable)

⑪ ⑫	Additional Options
Firmware, Overlays, Parameter Settings	
AA =	Standard
AB =	Replacement connectors hardware only for the entered part number
XX =	Custom

* Reset limits via digital input, EZ key on RUI or communications commands

EZ-ZONE RM

High-Density Scanner Module Specifications (RMS)

(Select an RMS module for 4 to 16 auxiliary analog inputs.)

Line Voltage/Power

- Power consumption: 7 W, 14VA
- Any external power supply used should comply with a Class 2 or SELV rating

Isolated Serial Communications

- All modules ship with standard bus protocol for configuration and communication with all EZ-ZONE controllers
- Optional EIA-485, Modbus® RTU

Calibration Accuracy

- ±0.1% of span, ±1°C. See user manual for details.

Universal Input

- Thermocouple, grounded or ungrounded sensors
- >20MΩ input impedance
- Max. of 2kΩ source resistance
- RTD 2-wire, platinum, 100Ω and 1000Ω @ 32°F (0°C) calibration to DIN curve (0.00385Ω/Ω/°C)
- Process, 0-20mA @100Ω, or 0-10VDC @ 20kΩ input impedance; scalable, 0-50mV

Thermistor Input

- 0 to 40kΩ, 0 to 20kΩ, 0 to 10kΩ, 0 to 5kΩ
- 2.252kΩ and 10kΩ base at 77°F (25°C)

Digital Input

- Update rate 10Hz
- Max. input 36VDC at 3mA
- Min. high state 3VDC at 0.25mA

Dry Contact Input

- Update rate 10Hz
- Min. open resistance 10kΩ, max. closed resistance 50Ω

Output Hardware

- 6 digital inputs/outputs:
  - Switched dc, max. 20VDC @ 40mA, 12VDC @ 80mA
  - Open collector, max. 32VDC @ 1.5A, max. 8A per 6 outputs combined
- Electromechanical relay, Form A, 5A, 24 to 240VAC or 30VDC max., resistive load, 100,000 cycles at rated load, requires a min. load of 20mA at 24V, 125VA pilot duty

EZ-ZONE RM

High-Density Scanner Module Ordering Information

Requires 24 to 28VAC/VDC power supply, includes communication port for configuration with EZ-ZONE configurator and PC.

Part Number

①② EZ-ZONE Rail Mount	③ Scanner Module	④ Connector Style		⑤ Slot A	⑥ Slot B	⑦ Slot D	⑧ Slot E		⑨ Future Option	⑩ Enhanced Options	⑪⑫ Additional Options
RM	S		-					-	A		

④	Connector Style/Custom Product
A =	Right angle screw connector (standard)
F =	Front screw connector (slots A, B, D and E only)
S =	Custom

⑤	Slot A
4 =	4 high accuracy thermocouple inputs (defaults to Type K)
R =	4 universal inputs (T/C, RTD 2-wire, 0-10VDC, 0-20mA) without control loops
P =	4 thermistor inputs without control loops

⑥	Slot B
A =	None
4 =	4 high accuracy thermocouple inputs (defaults to Type K)
R =	4 universal inputs (T/C, RTD 2-wire, 0-10VDC, 0-20mA) without control loops
P =	4 thermistor inputs without control loops

⑦	Slot D
A =	None
4 =	4 high accuracy thermocouple inputs (defaults to Type K)
R =	4 universal inputs (T/C, RTD 2-wire, 0-10VDC, 0-20mA) without control loops
P=	4 thermistor inputs without control loops
C =	6 digital I/O
F =	3 universal process/retransmit outputs
J =	4 mechanical relay 5A, Form A
L =	4 SSR at 2A each. SSR grouped in 2-pairs with each pair sharing a common.

⑧	Slot E
A =	None
4 =	4 high accuracy thermocouple inputs (defaults to Type K)
R =	4 universal inputs (T/C, RTD 2-wire, 0-10VDC, 0-20mA) without control loops
P =	4 thermistor inputs without control loops
B =	1 digital input and 2 mechanical relays, 4A
C =	6 digital I/O
F =	3 universal process/retransmit outputs
J =	4 mechanical relay 5A, Form A
L =	4 SSR at 2A each. SSR's grouped in 2-pairs with each pair sharing a common.

⑩	Enhanced Options
A =	Standard bus
1 =	Standard bus and Modbus® RTU 485 (user-selectable)

⑪⑫	Additional Options
Firmware, Overlays, Parameter Settings	
AA =	Standard
AB =	Replacement connectors hardware only, for the entered part number.
XX =	Custom

SERIES LF

Watlow's family of microprocessor-based limit controllers provide an economical solution for applications requiring temperature limit control. Limits are available in a broad range of packaging options, allowing selection of the best version for an individual application. Controllers are available without an operator interface and can be ordered in square 1/8 DIN-panel mount, DIN-rail mount or open board design configurations.

The SERIES LF limit family incorporates a microprocessor design platform. This design provides significant improvements in the performance, repeatability and accuracy offered by Watlow's current line of analog basic temperature controllers.

The SERIES LF limit offers fixed set points and can be supplied with or without an operator interface. Operating set point temperature values are customer defined in the product configuration part number.

The LF limit controllers are factory mutual (FM) approved with special UL® approval for the open board potted versions. Watlow's limit controllers include industry leading service and support and are protected by a three-year warranty.



Features and Benefits

Fixed set points
- Provides tamper-proof operation

Multiple mounting options
- Minimizes installation time

High or low limit with auto or manual reset
- Provides application flexibility

Fahrenheit or Celsius operation with indication
- Offers application flexibility

Sensor break protection
- Provides positive system shutdown

Agency approvals
- Meets certification requirements/compliance

Microprocessor based technology
- Ensures accurate, repeatable control

SERIES LF

Specifications

Limit Controller

- Microprocessor based, limit controller
- Nominal switching hysteresis, typically 3°F (1.7°C)
- High or low limit, factory selectable
- Latching output requires manual reset upon over or under temperature condition
- Manual or automatic reset on power loss, factory selectable
- External customer supplied momentary reset switch
- Input filter time: 1 second

Standard Conditions For Specifications

- Rated line voltage, 50 to 60Hz, 0 to 90% RH non-condensing, 15-minute warm-up
- Calibration ambient range: 77°F (25°C) ±3°C

Sensor Input

Thermocouple

- Grounded or ungrounded
- Type E, J, K, T thermocouple
- >10 MΩ input impedance
- 250 nV input referenced error per 1Ω source resistance

RTD

- 2-wire platinum, 100Ω
- DIN-curve (0.00385 curve)
- 125µA nominal RTD excitation current

Input Accuracy Span Range

Type E:	-328	to	1470°F	(-200	to	800°C)
Type J:	32	to	1382°F	(0	to	750°C)
Type K:	-328	to	2282°F	(-200	to	1250°C)
Type T:	-328	to	662°F	(-200	to	350°C)
RTD (DIN)	-328	to	1472°F	(-200	to	800°C)

Thermocouple Input

- Calibration accuracy: ±1% of input accuracy span, ±1° at standard conditions and actual calibration ambient. Exception: Type T, ±2.4% of input accuracy span for -328 to 32°F (-200 to 0°C)
- Temperature stability: ±0.3° per degree change in ambient

RTD Input

- Calibration accuracy ±1% of input accuracy span ±1° at standard conditions and actual calibration ambient
- Temperature stability: ±0.2° per degree change in ambient

Allowable Operating Ranges

Type E:	-328	to	1470°F	(-200	to	800°C)
Type J:	-346	to	1900°F	(-210	to	1038°C)
Type K:	-454	to	2500°F	(-270	to	1370°C)
Type T:	-454	to	750°F	(-270	to	400°C)
RTD (DIN)	-328	to	1472°F	(-200	to	800°C)

Output Types

Electromechanical Relay, Form C

- Min. load current: 100mA
- 8A @ 240VAC or 30VDC max., resistive
- 250VA pilot duty, 120/240VAC max., inductive
- Use RC suppression for inductive loads
- Electrical life 100,000 cycles at rated current

External Reset Switch

- Momentary, dry contact closure

Agency Approvals

SERIES LF (potted version only)

- UL® 991 recognized temperature limit for cooking industry
- UL® 60730-1

SERIES LF (including potted version)

- UL® 873 recognized temperature regulator
- UL® 197 reviewed for use in cooking appliances
- UL® 991
- ANSI Z21.23 gas appliance thermostat approval
- CSA C22.2 #24 approved limit control
- FM Class 3545 temperature limit switches
- RoHS, W.E.E.E.

Terminals

- 0.25 in. (6.3 mm) quick connect, push on terminal or removable screw terminals

Power

- 24VAC +10%; -15%; 50/60Hz, ±5%
- 120VAC +10%; -15%; 50/60Hz, ±5%
- 230 to 240VAC +10%; -15%; 50/60Hz, ±5%
- 10VA max. power consumption
- Data retention upon power failure via nonvolatile memory

Operating Environment

- 32 to 158°F (0 to 70°C)
- 0 to 90% RH, non-condensing
- Storage temperature: -40 to 185°F (-40 to 85°C)

Dimensions

- DIN-rail model can be DIN-rail or chassis mount DIN-rail spec DIN 50022, 1.38 in. x 0.30 in. (35 mm x 7.5 mm)

Style	Width	Height	Depth
Open Board	2.43 in. (61.7 mm)	2.43 in. (61.7 mm)	1.78 in. (45.1 mm)
Potted	2.76 in. (70.1 mm)	4.05 in. (102.9 mm)	1.84 in. (46.6 mm)
DIN-rail	3.08 in. (78.1 mm)	4.42 in. (112.3 mm)	3.57 in. (90.7 mm)
Square ⅛ DIN-panel	2.85 in. (72.4 mm)	2.85 in. (72.4 mm)	Behind panel 2.04 in. (51.7 mm)

SERIES LF

Ordering Information

Limit controller with 8A relay output, fixed set point

Part Number

① ②	③ Power Supply	④ Package	⑤ Sensor Type and Scale	⑥ Limit Type	⑦⑧⑨⑩ Fixed Set Point Temp. Value	⑪⑫⑬⑭	⑮ Overlay/ Custom Options
LF						AAAA	

③	Power Supply
C =	120VAC
E =	230 to 240VAC
G =	24VAC

④	Package
1 =	Panel mount, 1/8 DIN square - spade terminals
2 =	DIN-rail mount - spade terminals
3 =	Open, non potted - spade terminals
4 =	Potted case - spade terminals
5 =	Panel mount, 1/8 DIN square - screw terminals
6 =	DIN-rail mount - screw terminals
7 =	Open, non potted - screw terminals

⑤	Sensor Type and Scale
H =	T/C Type J Fahrenheit (-346 to 1900°F)
J =	T/C Type J Celsius (-210 to 1038°C)
K =	T/C Type K Fahrenheit (-454 to 2500°F)
L =	T/C Type K Celsius (-270 to 1370°C)
M =	T/C Type T Fahrenheit (-454 to 750°F)
N =	T/C Type T Celsius (-270 to 400°C)
P =	RTD Fahrenheit (-328 to 1472°F)
R =	RTD Celsius (-200 to 800°C)
S =	T/C Type E Fahrenheit (-328 to 1470°F)
T =	T/C Type E Celsius (-200 to 800°C)

⑥	Limit Type
U =	High limit manual reset
W =	High limit auto reset
Y =	Low limit manual reset
Z =	Low limit auto reset

⑦⑧⑨⑩	Fixed Set Point Temperature Value
Note: A (-) is used in the left most digit of the fixed set point indicates a negative temperature value.	

⑮	Overlay/Custom Options
A =	Standard with Watlow logo
1 =	Standard without Watlow logo

SERIES LV

Watlow's family of microprocessor-based limit controllers provides an economical solution for applications requiring temperature limit control. Limits are available in a broad range of packaging options, allowing selection of the best version for an application. Limits are available with an operator interface and can be ordered in 1/8 DIN-square panel mount or DIN-rail mount design configurations.

The SERIES LV limit family incorporates a microprocessor design platform. This design provides significant improvements in the performance, repeatability and accuracy offered by Watlow's current line of analog limit controllers.

The variable SERIES LV limit includes an operator interface for viewing and selecting the set point. A red, four-character seven segment LED displays the set point. Set point selection is made with a continuous turn rotary encoder. Operating range temperature values are customer defined in the product configuration part number.

The limit controllers are factory mutual (FM) approved with special UL® approval for the open board potted versions. Watlow's limit controllers include industry leading service and support and are protected by a three-year warranty.



Features and Benefits

Adjustable set points
- Offers control flexibility

Four character LED display
- Improves set point selection accuracy

Multiple mounting options
- Minimizes installation time

High or low limit with auto or manual reset
- Provides application flexibility

Fahrenheit or Celsius operation with indication
- Offers application flexibility

Sensor break protection
- Provides positive system shutdown

Agency approvals
- Meets certification requirements/compliance

Microprocessor based technology
- Ensures accurate, repeatable control

SERIES LV

Specifications

Limit Controller

- Microprocessor-based limit controller
- Nominal switching hysteresis, typically 3°F (1.7°C)
- High or low limit, factory selectable
- Latching output requires manual reset upon over or under temperature condition
- Manual or automatic reset on power loss, factory selectable
- Internal front panel or external customer supplied momentary reset switch
- Input filter time: 1 second

Operator Interface

- 4 digit, 7 segment LED displays, 0.28 in. (7 mm) high
- °F or °C indicator LED
- Alarm indicator LED
- Continuous turn, velocity sensitive rotary encoder for set point adjustment
- Front panel SET/RESET

Standard Conditions for Specifications

- Rated line voltage, 50 to 60Hz, 0 to 90% RH non-condensing, 15-minute warm-up
- Calibration ambient range: 77°F (25°C) ±3°C

Sensor Input

Thermocouple

- Grounded or ungrounded
- Type E, J, K, T thermocouple
- >10 MΩ input impedance
- 250 nV input referenced error per 1Ω source resistance

RTD

- 2-wire platinum, 100Ω
- DIN-curve (0.00385 curve)
- 125µA nominal RTD excitation current

Input Accuracy Span Range

Type E:	-328	to	1470°F	(-200	to	800°C)
Type J:	32	to	1382°F	(0	to	750°C)
Type K:	-328	to	2282°F	(-200	to	1250°C)
Type T:	-328	to	662°F	(-200	to	350°C)
RTD (DIN)	-328	to	1472°F	(-200	to	800°C)

Thermocouple Input

- Calibration accuracy: ±1% of input accuracy span, ±1° at standard conditions and actual calibration ambient. Exception: Type T, ±2.4% of input accuracy span for -328 to 32°F (-200 to 0°C)
- Temperature stability: ±0.3° per degree change in ambient

RTD Input

- Calibration accuracy ±1% of input accuracy span ±1° at standard conditions and actual calibration ambient
- Temperature stability: ±0.2° per degree change in ambient

Allowable Operating Ranges

Type E:	-328	to	1470°F	(-200	to	800°C)
Type J:	-346	to	1900°F	(-210	to	1038°C)
Type K:	-454	to	2500°F	(-270	to	1370°C)
Type T:	-454	to	750°F	(-270	to	400°C)
RTD (DIN)	-328	to	1472°F	(-200	to	800°C)

Electromechanical Relay, Form C

- Min. load current: 100mA
- 8A @ 240VAC or 30VDC max., resistive
- 250VA pilot duty, 120/240VAC max., inductive
- Use RC suppression for inductive loads
- Electrical life 100,000 cycles at rated current

External Reset Switch

- Momentary, dry contact closure

Agency Approvals

SERIES LV (potted version only)

- UL® 991 recognized temperature limit for cooking industry
- UL® 60730-1

SERIES LV (including potted version)

- UL® 873 recognized temperature regulator
- UL® 197 reviewed for use in cooking appliances
- UL® 991
- UL® 50 IP65 for tactile key models
- ANSI Z21.23 Gas appliance thermostat approval
- CSA C22.2#24 approved limit control
- FM Class 3545 temperature limit switches
- RoHS, W.E.E.E.

Terminals

- 0.25 in. (6.3 mm) quick connect, push on terminal or removable screw terminals

Power

- 24VAC +10%; -15%; 50/60Hz, ±5%
- 120VAC +10%; -15%; 50/60Hz, ±5%
- 230 to 240VAC +10%; -15%; 50/60Hz, ±5%
- 10VA max. power consumption
- Data retention upon power failure via nonvolatile memory

Operating Environment

- 32 to 158°F (0 to 70°C)
- 0 to 90% RH, non-condensing
- Storage temperature: -40 to 185°F (-40 to 85°C)

SERIES LV

Specifications *(Continued)*

Dimensions

DIN-rail model can be DIN-rail or chassis mount DIN-rail spec DIN 50022, 1.38 in. x 0.30 in. (35 mm x 7.5 mm)

Style	Width	Height	Depth
DIN-rail	3.08 in. (78.1 mm)	4.42 in. (112.3 mm)	3.57 in. (90.7 mm)
Square ⅛ DIN-panel	2.85 in. (72.4 mm)	2.85 in. (72.4 mm)	Behind panel 2.04 in. (51.7 mm)

Ordering Information

Limit controller with 8A relay output, rotary set point adjustment, 4 character, 7 segment display, reset switch

Part Number

① ②	③	④	⑤	⑥	⑦⑧⑨⑩	⑪⑫⑬⑭	⑮
	Power Supply	Package	Sensor Type and Scale	Limit Type	Low Set Point Operating Range Value	High Set Point Operating Range Value	Overlay/ Custom Options
LV							

③	Power Supply
C =	120VAC
E =	230 to 240VAC
G =	24VAC

④	Package
1 =	Panel mount, 1/8 DIN square - spade terminals
2 =	DIN-rail mount - spade terminals
5 =	Panel mount, 1/8 DIN square - screw terminals
6 =	DIN-rail mount - screw terminals
A =	NEMA 4X panel mount, tactile keys (spade terminals)
B =	DIN-rail mount, tactile keys (spade terminals)
C =	NEMA 4X panel mount, tactile keys (screw terminals)
D =	DIN-rail mount, tactile keys (screw terminals)

⑤	Sensor Type and Scale
H =	T/C Type J Fahrenheit (-346 to 1900°F)
J =	T/C Type J Celsius (-210 to 1038°C)
K =	T/C Type K Fahrenheit (-454 to 2500°F)
L =	T/C Type K Celsius (-270 to 1370°C)
M =	T/C Type T Fahrenheit (-454 to 750°F)
N =	T/C Type T Celsius (-270 to 400°C)
P =	RTD Fahrenheit (-328 to 1472°F)
R =	RTD Celsius (-200 to 800°C)
S =	T/C Type E Fahrenheit (-328 to 1470°F)
T =	T/C Type E Celsius (-200 to 800°C)

⑥	Limit Type
U =	High limit manual reset
W =	High limit auto reset
Y =	Low limit manual reset
Z =	Low limit auto reset

⑦⑧⑨⑩ Low Set Point Operating Range Value
Note: A (-) is used in the left most digit of the fixed set point indicates a negative temperature value.

⑪⑫⑬⑭ High Set Point Operating Range Value
Note: A (-) is used in the left most digit of the fixed set point indicates a negative temperature value.

⑮	Overlay/Custom Options
A =	Standard with Watlow logo
1 =	Standard without Watlow logo

SERIES LS

As manufacturers are required to meet tighter safety standards, Watlow has addressed this need with its new SERIES LS safety limit. This new limit meets UL® 1998 and EN 60730 safety requirements and will shut down a system to prevent damage to equipment or injury to personnel.

Watlow's SERIES LS is recommended for any application where control failure could cause the temperature of the application to continue to increase resulting in large product scrap costs, damage to system equipment or potential fire hazard.

The SERIES LS provides increased safety due to the use of a factory fixed set point, factory fixed hysteresis and the use of redundant temperature sensors to protect against a single point sensor failure. Either sensor can initiate an overtemperature limit condition along with a deviation between sensors greater than the process comparison value.

Watlow's new SERIES LS offers fixed limit set point temperature values that are customer definable in the product configuration part number. It is available with a potted module design configuration and push-on, quick connect spade terminals to provide the electrical connections.

Features and Benefits

Fixed limit set point
- Provides tamper-proof operation
- Offers control flexibility

Dual channel sensors
- Detects sensor faults
- Provides a fail-safe design
- Verifies firmware
- Prevents sensor deviation and sensor placement errors

High-limit operation
- Provides application flexibility

Fahrenheit or Celsius operation
- Delivers application flexibility

Sensor break protection
- Offers positive system shutdown



Agency approvals
- Meets certification requirements/compliance

Microprocessor-based technology
- Ensures accurate, repeatable protection

Status notification
- Signals user of status with two integrated LEDs
- Provides health check signal to inform operator that the process is working correctly

Three-year warranty
- Ensures product support and reliability

Typical Applications

- Foodservice equipment
- Industrial machinery
- Medical equipment
- Packaging equipment
- Plastics processing equipment

SERIES LS

Specifications

Controller

- Microprocessor based, limit controller
- Customer defined hysteresis, model number dependent
- High limit, factory selectable
- Automatic reset on power loss
- Input filter time: 1 second

Thermocouple Sensor Input

- Ungrounded
- Type J and K thermocouple types
- >10 MΩ input impedance

Input Accuracy Span Range

- Type J: 0 to 764°F (-18 to 406°C)
- Type K: 0 to 999°F (-18 to 537°C)
- Calibration accuracy: ±6°C, ±1° at standard conditions and actual calibration ambient
- Temperature stability: ±0.3 degree per degree change in ambient

Allowable Operating Ranges

- Type J: 32 to 626°F (0 to 330°C)
- Type K: 32 to 820°F (0 to 438°C)

Output Types

- Electromechanical relay, Form A, minimum load current: 100mA, 8A resistive load, 120VA pilot duty, 120/240VAC maximum, inductive, electrical life 6,000 cycles at rated current

Terminals

- 0.25 in. (6.4 mm) quick connect, push-on terminals

Agency Approvals

- UL® / EN 60730-1, 2, 9 automatic electronic controls for household and similar use. File #E43684
- UL® 1998 software review class B
- W.E.E.E.; CE – see Declaration of Conformity
- RoHS directive (2011-65-EU)

Power

- 100-240VAC +10%; -15%; 50/60Hz, ±5%
- 10VA maximum power consumption
- Data retention upon power failure via nonvolatile memory

Environment

- Operating temperature: 32 to 158°F (0 to 70°C)
- Storage temperature: -40 to 185°F (-40 to 85°C)
- Relative humidity: 0 to 90% RH, non-condensing

Dimensional Drawing

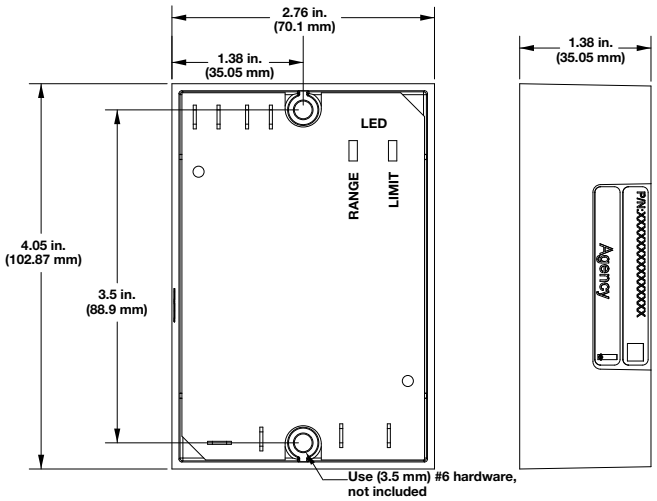

Ordering Information

Part Number

① ②	③	④	⑤	⑥	⑦ ⑧ ⑨ ⑩	⑪ ⑫ ⑬	⑭ ⑮
	Set Point	Package	Sensor Type and Scale	Limit Type	High Set Point Temp. Value	Hysteresis	Custom Options
LS	F	4		W			AA

③	Set Point
F =	Fixed set point

④	Package
4 =	Potted case, spade terminals

⑤	Sensor Type and Scale
H =	T/C Type J Fahrenheit (32 to 626°F)
J =	T/C Type J Celsius (0 to 330°C)
K =	T/C Type K Fahrenheit (32 to 820°F)
L =	T/C Type K Celsius (0 to 438°C)

⑥	Limit Type
W =	High limit, power cycle to reset

⑦ ⑧ ⑨ ⑩	High Set Point Temperature Value
XXXX =	A zero (0) is used in the left most digit of the set point

⑪ ⑫ ⑬	Hysteresis
XXX =	The temperature differential below the limit set point at which a reset is possible. Limit high set point - hysteresis must be greater than or equal to the low sensor range

⑭ ⑮	Custom Options
AA =	Standard

D4T™ 1/4 DIN

The D4T™ data logger offers a wide range of field removable I/O modules for maximum design flexibility. Configurations can be custom tailored to meet the scaling needs of a tremendous range of equipment and applications while providing exactly the hardware types required for compatibility. The D4T data logger also features a 4.3 inch, color, graphical touch panel. Combining power, flexibility and functionality, this new data logger offers unmatched versatility, and its best-in-class ease of use could very well make user manuals a thing of the past.

Watlow's D4T is available through Watlow ***SELECT***®, a program that enables you to quickly identify, configure and receive your thermal products faster and easier than ever before. With ***SELECT***, you use a variety of tools to guide your decision, configure products for an exact fit and quickly receive your order.

Features and Benefits

4.3-inch, color touch panel with high-resolution, graphical user-interface

- Shortens learning curve and reduces operator errors
- Allows channels, alarms, inputs and outputs to be personalized with user defined names
- Intuitive screens layout and menu navigation
- Programmable to show information in multiple languages

Data logging

- Easily complies with regulatory standards with ability to choose encrypted, .CSV or both types of file formats for tamper proof record needs
- Enables security using lock-out security levels for different user groups
- Simplifies record keeping management with ability to archive records to the cloud or a connected PC network
- Flexibility to select which parameters to log from one to up to 128 points simultaneously
- Choose where you want to store the files—inside the controller, on a connected USB memory device, or to a connected PC anywhere in the world
- Record as fast as one time per 0.1 second or as slow as one time per hour

One to 24 channel data logger

- Scalable channels, pay for only what you need
- Compatible with temperature, altitude, humidity, ac current and other 0-10VDC or 0-20mA process units
- Flexibility to meet diverse process applications
- Field expandable channels and I/O if application needs grow in the future



Email and text alerts

- Notifies users of an event that has occurred such as an alarm condition or analog input error

Batch processing with bar code data entry

- Easily collects and manages data records
- Inputs information from bar code scan for fast and easy data entry
- Provides data security through password and data log encrypted file options
- Improves manufacturing robustness via reminder screens ensuring all data is entered during processing
- Helps ensure compliance with growing regulations and minimizes warranty exposure
- Eliminates part processing skips or walk arounds due to improved quality control
- Produces formatted data record report for easy receipt or record management uses

Modular design

- Adapts quickly to evolving requirements
- Offers numerous types of field pluggable modules for maximum flexibility and easiest compatibility
- Features scalable and modular firmware functions
- Delivers scalable input/output quantities from one to 24

Trend screens

- Create up to four unique trend graph screens
- Graph any input sensor or process value

COMPOSER® graphical configuration PC software

- Speeds up and simplifies commissioning
- Archives and documents controller setup
- Connects with controller easily via Ethernet

Many communications options available including EtherNet/IP™, Modbus® TCP (Ethernet) SCPI and EIA-232/485 Modbus® RTU

- Offers two USB host ports and one device port
- Simplifies file transfers
- Connects easily

D4T 1/4 DIN

Key Features and Options

- Ethernet Modbus® TCP connectivity
- Multiple high-speed USB host ports
- Universal, thermistor and ac current measurement inputs
- Inputs and outputs expandable from 1 to 24
- Programmable timers, counters, math and logic
- Temperature, altitude, relative humidity and Vaisala® humidity compensation
- USB configuration port
- Configuration settings can be stored and recalled
- Removable modules and connectors
- Front-panel mount and flush mounting options
- Right angle and front-screw terminal options
- UL® listed, CSA, CE, RoHS, W.E.E.E., FM
- Multi-language options
  - English, German, French, Italian, Spanish, Japanese, Korean and Chinese
- USB wired or wireless mouse user interface
  - Use in hazardous location, dirty environments or applications with gloves

Common Specifications

Line Voltage/Power

- Data retention upon power failure via nonvolatile memory

Functional Operating Range

- Type J: -346 to 2192°F (-210 to 1200°C)
- Type K: -454 to 2500°F (-270 to 1371°C)
- Type T: -454 to 750°F (-270 to 400°C)
- Type E: -454 to 1832°F (-270 to 1000°C)
- Type N: -454 to 2372°F (-270 to 1300°C)
- Type C: 32 to 4200°F (0 to 2315°C)
- Type D: 32 to 4200°F (0 to 2315°C)
- Type F: 32 to 2449°F (0 to 1343°C)
- Type R: -58 to 3214°F (-50 to 1767°C)
- Type S: -58 to 3214°F (-50 to 1767°C)
- Type B: 32 to 3300°F (0 to 1816°C)
- RTD (DIN): -328 to 1472°F (-200 to 800°C)
- Process: -1999 to 9999 units

Calibration Accuracy

- Calibration accuracy and sensor conformity: ±0.1% of span, ±1°C at the calibrated ambient temperature and rated line voltage
  - Types R, S, B: ±0.2%
  - Type T below -50°C: ±0.2%
- Calibration ambient temperature at 77°F ±5°F (25°C ±3°C)
- Accuracy span: 1000°F (540°C) min.
- Temperature stability: Typical ±0.1°F/°F (±0.1°C/°C) rise in ambient max.

Configuration Diagnostics

- Indicates if modules present match the expected configuration settings

USB Host Port

- Total of 2 available
- Version: USB 2.0 hi-speed
- Connector: USB Type A, high-retention
- Flash drive must be FAT32 file system
- Max. current 0.5A/port

System Configuration Requirements

- D4T has 6 slots for flex modules (FM)
- EIA-232/485 Modbus® RTU flex module, if used, must occupy slot 6 location
- A maximum of two 10A SSR FM modules can be used in the F4T® and each will require space for 2 slots. Valid in slots 1, 2, 4 or 5

Wiring Termination—Touch-Safe Terminals

- Right-angle and front-screw terminal blocks for input, output and power supply connections
- Input, output and power terminals: Touch safe, removable, 12 to 30 AWG

D4T Base Specifications

Line Voltage/Power

- High voltage option: 100 to 240VAC +10/-15%, 50/60Hz ±5%
- Low voltage option: 24 to 28VAC/VDC+10/-15%, 50/60Hz ±5%
- Power consumption: 23 W, 54VA

User Interface

- 4.3 inch TFT PCAP color graphic touch screen
- LED backlife >50K hours
- 4 keys: Home, Main Menu, Back, Help
- Multiple languages
  - English, German, French, Italian, Spanish, Japanese, Korean and Chinese
- USB wired or wireless mouse functionality
  - Right click for 4 keys: Home, Main Menu, Back, Help

Environment

- NEMA 4X/IP65 front panel mount configuration only
- Operating temperature: 0 to 122°F (-18 to 50°C)
- Storage temperature: -40 to 185°F (-40 to 85°C)
- Relative humidity: 0 to 90%, non-condensing

Agency Approvals

- UL®/EN 61010 Listed, File E185611 QUYX
- UL® 508 Reviewed
- CSA CC.C#14, File 158031
- AMS 2750 E compliant: Analog input process values. Tip: Maximize field calibration accuracy and uniformity by using advanced F4T features such as Calibration Offset and Linearization Function Blocks. Refer to user manual for details
- RoHS by design, China RoHS Level 2, W.E.E.E.
- CE
- Windows® hardware certification

D4T 1/4 DIN

Inputs and Outputs
- Input sampling: 10Hz
- Output update: 10Hz

Communications
- Modbus® TCP (Ethernet)
- EIA-232/485 Modbus® RTU
- Isolated communications

Data Logging
- User selectable parameters: Up to a maximum of 128 active parameters depending on configuration
- Logging interval: Programmable increments between 0.1 seconds and 60 minutes if logging to internal memory. Logging directly to USB; 1.0 seconds to 60 minutes
- File types: .CSV for standard data logging or proprietary format for encrypted data log option
- Storage: 80MB internal memory or to USB memory stick
- File transfer: Internal memory to USB host port or to Ethernet Modbus® TCP
- Transfer options: On demand by user or user programmable based on when a new data log file record is available. Utilizes TFTP and Samba protocols
- Record: Date and time stamped

Batch Processing with Bar Code Data Entry Via USB Scanner
- Compatible with many bar code types including Code 128, Code 39, Extended Code 39, Data Matrix, Interleaved 2 of 5, ISSN, SISAC, LOGMARS, QR, UCC/EAN-128 (GS1-128, UPC-A & E)
- Compatible with most USB scanner types such as Zebra DS4308, DS2208, LI2208 and LS2208
- USB port provides 500mA max. power supply for bar code scanner/base charging
- Display can show bar code fields up to a maximum length of 48 characters. Characters might wrap to 2 rows after 24 characters
- Program the bar code scanner to add an enter key (carriage return feed) at the end of each bar code data field sent to the F4T/D4T. Refer to USB scanner user manual

Trending
- 4 user programmable charts
- 6 pens available per chart
- View analog sensors and process values

Real Time Clock with Battery Backup
- Accuracy (typical): +/-3ppm over -15 to 50°C
- Typical battery life: 10 years at 77°F (25°C)
- Field replaceable lithium battery

Number of Function Blocks by Ordering Option

Function Block	Basic	Set 1	Set 2
Alarm	6	8	14
Compare	None	4	16
Counter	None	4	16
Linearization	4	4	8
Logic	None	12	24
Math	None	12	24
Process Value	4	4	8
Special Output Function (including compressor)	None	2	4
Timer	None	6	16
Variable	4	12	24

Compare
- Greater than, less than, equal, not equal, greater than or equal, less than or equal

Counters
- Counts up or down, loads predetermined value on load signal

Linearization
- Interpolated or stepped

Logic
- And, nand, or, nor, equal, not equal, latch, flip-flop

Math
- Average, process scale, switch over, deviation scale, differential (subtract), ratio (divide), add, multiply, absolute difference, minimum, maximum, square root, sample and hold, pressure-to-altitude and dew point

Process Value
- Sensor backup, average, crossover, wet bulb-dry bulb, switch over, differential (subtract), ratio (divide), add, multiply, absolute difference, minimum, maximum, square root, altitude, Vaisala® relative humidity and pressure-to-altitude

Special Output Function
- Compressor control (cool and/or dehumidify with single compressor), motorized valve, sequencer

Timers
- On pulse, delay, one shot or retentive

Variable
- User value for digital or analog variable

D4T 1/4 DIN

Panel Mount Dimensions

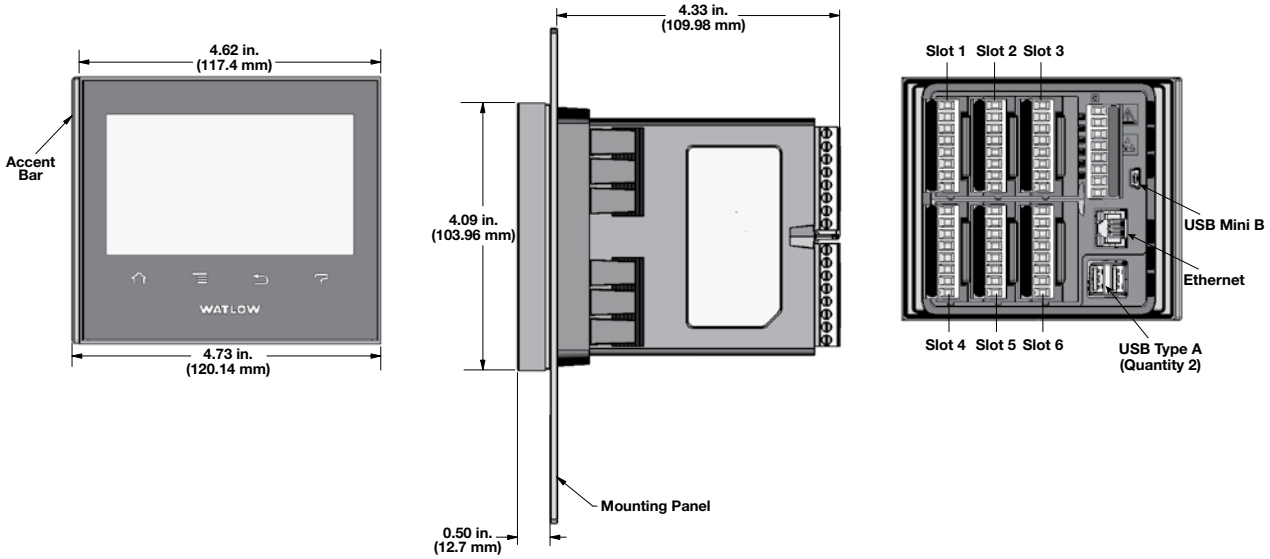

Flush Mount Dimensions

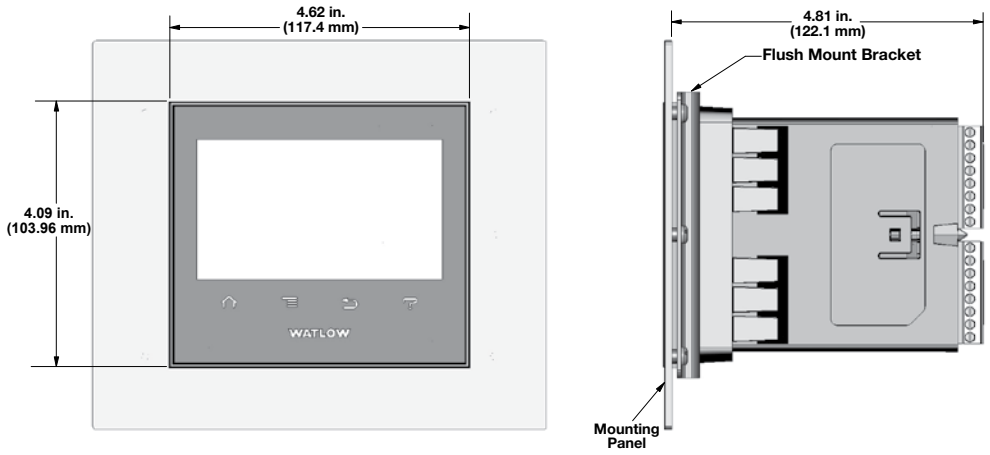

D4T 1/4 DIN

Ordering Information

Base includes: 4.3 inch color graphical touch screen, standard bus communications, Ethernet, Modbus® TCP and SCPI protocol.

Part Number

①② Model	③ Base Type	④ Appl. Type	⑤ Data Logging & Trend Charts	⑥ Pwr. Sup. Voltage, Conn. Style, Watlow Logo Screenprint	⑦ Function Blocks	⑧⑨ Future Options	⑩⑪ Doc., Accent Bar, Replacement Conn. & Custom	⑫ Add'l Options	⑬⑭ Nbr. Logging Channels & Input Hardware Types	⑮ Nbr. of Aux./Alarm Outputs, Digital Inputs & Hardware
D4	T					AA		5		

③ Base Type	
T =	Touch screen

④ Application Type	
1 =	Standard

⑤ Data Logging and Trend Charts	
J =	Data logging
K =	Data logging with encrypted files
L =	Data logging with graphical trend charts
M =	Data logging with encrypted files, graphical trend charts and batch processing with bar code data entry

⑥ Power Supply Voltage, Connector Style, Watlow Logo Screenprint

	Power Supply	Power Supply Connector	Watlow Logo
1 =	100 to 240VAC	Right angle (standard)	Yes
2 =	100 to 240VAC	Right angle (standard)	No
3 =	100 to 240VAC	Front screw	Yes
4 =	100 to 240VAC	Front screw	No
5 =	24 to 28VAC or VDC	Right angle (standard)	Yes
6 =	24 to 28VAC or VDC	Right angle (standard)	No
7 =	24 to 28VAC or VDC	Front screw	Yes
8 =	24 to 28VAC or VDC	Front screw	No

⑦ Function Blocks

	Basic Set	Set 1	Set 2
A =	X		
B =		X	
C =			X

⑧⑨ Future Options	
AA =	Future Options

⑩⑪ Documentation, Accent Bar, Replacement Connectors & Custom

	Documentation DVD/QSG	Decorated Brush Aluminum Accent Bar			
		Gray	Blue	Red	None
1A =	Yes	X			
1B =	Yes		X		
1C =	Yes			X	
1D =	Yes				X
1E =	No	X			
1F =	No		X		
1G =	No			X	
1H =	No				X
1J =	Replacement connectors only - for the model number entered				
XX =	Contact factory, other custom-firmware, preset parameters, locked code, logo				

⑫ Additional Options	
5 =	None

⑬⑭ Number of Logging Channels & Input Hardware Types	
Universal Input(s) (T/C, RTD 2- or 3-wire, 0-10VDC, 0-20mA)	
U1 =	1 channel
U2 =	2 channels
U3 =	3 channels
U4 =	4 channels
U5 =	5 channels
U6 =	6 channels
Thermistor Input(s)	
T1 =	1 channel
T2 =	2 channels
T3 =	3 channels
T4 =	4 channels
T5 =	5 channels
T6 =	6 channels
Universal Input(s) (T/C, RTD 2-wire, 0-10VDC, 0-20mA)	
04 =	4 channels
08 =	8 channels
12 =	12 channels
16 =	16 channels
20 =	20 channels
24 =	24 channels
Thermistor Input(s)	
TA =	4 channels
TB =	8 channels
TC =	12 channels
TD =	16 channels
TE =	20 channels
TF =	24 channels
Custom	
XX =	Different channel quantity and combination options. Contact factory for assistance.

⑮ Number of Auxiliary/Alarm Outputs, Digital Inputs & Hardware	
Options below are not available with 6 or 24 channel input models	
A =	None
Single Output	
C =	1 switched dc/open collector
E =	1 mechanical relay 5A, Form C output
F =	1 universal process/retransmit
Multiple Digital Inputs/Outputs	
D =	6 digital I/O
P =	3 universal process/retransmit outputs
B =	3 mechanical relay 5A, 2 Form C and 1 Form A (Form A shares a common with 1 Form C)
J =	4 mechanical relay 5A, Form A
K =	2 SSRs Form A, 0.5A
T *=	2 SSRs at 10A
L =	2 SSRs at 2A each, SSRs grouped in 2 pairs with each pair sharing a common
Communications	
M =	Modbus® RTU 232/485
Custom	
X =	Different output quantity and combination options. Contact factory for assistance.
*Option "T" not available with digit 13 & 14, options U5, U6, T5, T6, 20, 24, TE and TF.	

RMA PLUS™ Remote Access Module

Watlow's RMA PLUS™ remote access module supports Watlow's powerful EZ-ZONE® RM temperature controller family by communicating with and providing access to all EZ-ZONE RM modules in a system.

EZ-ZONE RMA users have had to spend more time than desired to connect their entire system. Now the RMA PLUS offers standard state-of-the-art connectivity from the device to the entire system. Real-time communication is possible via a built-in Ethernet switch or USB. Users can also connect to third-party and legacy devices because the RMA PLUS acts as a gateway between Modbus® TCP and Modbus® RTU.

The device comes standard with a built-in managed Ethernet switch with two Ethernet jacks. Up to three Modbus® TCP sessions, three Watbus over Ethernet sessions and one Watbus over USB session is available in a single device. Users can also log up to 16 gigabytes of data standard or upgrade to a maximum of 32 gigabytes. Configuration and data logs are available as Windows® files so they can be easily accessed. In addition, discovery and transfer speeds have gone from minutes with the legacy EZ-ZONE RMA to just seconds with the RMA PLUS.

Because the RMA PLUS is an essential component of the EZ-ZONE RM family, users receive all the benefits and support of working with Watlow®.

To view a comparison between the legacy EZ-ZONE RM Access Module and the new RMA Plus go to www.watlow.com/rmaplus.



Features and Benefits

Plug and play access to EZ-ZONE RM family
- Integrates easily into existing systems

Built-in Ethernet switch
- Eliminates the need to provide a switch for small systems
- Offers port mirroring for troubleshooting
- Protects from broadcast and multicast storms

Integrated USB connection
- Provides easy connection from PC with no converter
- Ensures real-time communication from software packages

Modbus® TCP and Modbus® RTU
- Allows users to build tables based on individual needs
- Connects to third-party and legacy devices

Data logging
- Offers users the opportunity to log any data point in the system

RMA PLUS Remote Access Module

Specifications

(Select a RMA PLUS module for communication protocol options, data logging and system configuration).

Interoperable with:
- EZ-ZONE RM (C, E, H, L, S) version 9.0+ (high-speed Watbus)
- EZ-ZONE RM (A, C, E, H, L, S) (low-speed Watbus)
- EZ-ZONE PM, RUI, ST (low-speed Watbus)
- EZ-ZONE RM (F, G, UH, Z)
- POWERGLIDE®

Line Voltage/Power
- Power consumption: 4 W, 9VA
- Any external power supply used should comply with a Class 2 or SELV rating

Isolated Serial Communications
- All modules ship with standard bus protocol (Watbus) for configuration and communication connection to all EZ-ZONE products

Standard Communication
- Watbus over Ethernet (gateway to high-speed Watbus)
- Watbus over USB (gateway to high-speed Watbus)
- Watbus via Serial ('C' connector)
- Modbus® TCP

Additional Communication Options
- EIA-232/485, Modbus® RTU
- DeviceNet™ (future option)
- EtherNet/IP™ (future option)

USB
- USB 2.0 device
- Mini USB connector type
- Recognized as a composite device: Vendor specific and mass storage classes
- USB host (future option)

Real Time Clock with Battery Backup
- Accuracy (typical): +/- 30ppm at 77°F (25°C)
- +30/-100ppm overtemperature operating range
- Battery type and typical lifetime rating: 10 years at 77°F (25°C)
- Lithium battery used, recycle properly

Data Logging
- Maximum of 2000 valid records
- Maximum of 500 unique data points per Watbus bus and zone
- File storage on embedded micro SD memory
- Comma separated value (.CSV) file type
- Access log files via USB device port

Memory Card
- Micro SDHC (4-32GB)
- 4GB class 4 SDHC on standard models (operating temperature: -25 to 85°C)
- 16GB class 10 SDHC on data log models (operating temperature: -40 to 85°C)
- -4 to 185°F (-20 to 85°C) ambient rating, non-volatile memory

Note: All module parameters are backed up in memory.

RMA PLUS Remote Access Module

Ordering Information

Module for communications, data logging and storage. Comes standard with Modbus® TCP, standard bus over Ethernet, USB device, internal storage and SD card

Part Number

①②③④ EZ-ZONE Rail Mount		⑤ Additional Communication Protocols	⑥ Ultra High Density Thermocouple Input Card	⑦ Data Logging	⑧ Wireless Connectivity		⑨ Future Option	⑩ Future Option	⑪⑫ Additional Options
RMAP	-					-	A	A	

⑤	Additional Communication Protocols
A =	None
2 =	Modbus® RTU 232/485
5 =	DeviceNet™ (future option)

⑥	Ultra High Density T/C Input Card
A =	None
1 =	18 T/C scanner inputs (future option)
2 =	18 T/C limit inputs with one global relay output (future option)

⑦	Data Logging
A =	None
D =	Data logging to 16G SD card

⑧	Wireless Connectivity
A =	None
B =	Bluetooth® (future option)
W =	Wi-Fi (future option)

⑨	Future Option
A =	Future option

⑩	Future Option
A =	Future option

⑪⑫	Additional Options
AA =	Standard
XX =	Custom/locked code application specific

Silver Series EM

The Silver Series EM is a rugged, touch-screen operator interface terminal (OIT). Available in three sizes (4.3, 7 and 10 inch diagonal display sizes), the OIT's feature serial and Ethernet communications with multiple controllers, email messaging, universal serial bus (USB host), data logging, flexible password security and multiple languages. The small bezel size and two-inch depth make mounting in tight spots easy.

The Silver Series EM programming software, EZwarePlus, is easy to use and features a large variety of built-in screen objects that makes it powerful. When creating screens, the user can call upon extensive graphics libraries, import custom graphics and add numeric displays, entry fields, analog meters, bar graphs and trend graphs with just a few mouse clicks. Screen objects are highly customizable, and the user can create libraries of their own objects for repeat use. The online simulator, Ethernet and USB support make testing and downloading fast. The EZwarePlus screen editor is part of the EZwarePlus software suite and is available as a FREE download on www.watlow.com.

The Silver Series EM OIT paired with Watlow® controllers is the perfect solution for your industrial process or machine control application.

Features and Benefits

Bright, color, high resolution, graphic, touch screen, thin film transistor (TFT) display
- Maximizes display space in the OIT footprint
- Allows application specific interface design
- Allows viewing from a distance and at an angle
- Highlights important process information with color and animation

User selectable portrait or landscape operation
- Fits in tight spots

Ethernet, serial and USB host ports
- Allows options for connecting to controllers
- Provides options for downloading projects
- Expands memory for additional recipe and data log storage
- Supports barcode readers, keyboard, mouse and printers
- Supports monitoring from a personal computer (PC) with free virtual network computing (VNC) client software



Support for over 100 protocols, up to three simultaneously plus multiple protocols over Ethernet
- Connects to a wide range of industrial controllers and devices
- Integrates a variety of devices to simplify complex operation tasks

Data logging, display and trending
- Helps operators monitor processes
- Reduces labor and increases accuracy by automating time-stamped data collection
- Stores captured data for future retrieval in multiple files
- Saves time by exporting data to Excel®-compatible comma separated value (.csv) files
- Improves process understanding by allowing live and historical data to be viewed on the OIT

Alarm and event email notification, monitoring and recording
- Reduces downtime by helping troubleshoot equipment and processes
- Simplifies troubleshooting by recording time and date- stamped alarm and event history
- Organizes and prioritizes alarms and events in up to 255 categories and four priority levels

Recipe management
- Reduces errors by automating process setting changes

Offline and online simulation
- Speeds up development by making it faster and easier to test projects
- Allows faster creation of fine-tuned interfaces by speeding up iterations

Time or trigger-based data exchange
- Simplifies integration by allowing the OIT to copy data from one controller or OIT to another

Internal, piezoelectric buzzer
- Provides audible alarms and key chirp

Silver Series EM

Features and Benefits *(Continued)*

Two-year warranty
- Provides product support and reliability

Screen object password security with programmable hierarchy and multiple users
- Prevents errors and tampering by allowing only authorized users to access restricted items on the screen
- Allows flexible hierarchies by letting the developer assign each screen object to any of 12 groups and grant each user access to any combination of groups
- Provides password protection for upload, download and access to local setup
- Supports up to 127 users

Screen object invisibility and/or interlock control
- Prevents errors by guiding operators

Powerful, easy-to-use EZwarePlus programming software
- Requires only a small investment in time to create a useful interface
- Provides the ability to learn additional features as needed
- Provides advanced interface features such as animation and pop-up windows
- Reduces development time by providing extensive graphical libraries and facilitating reuse with user-created libraries
- Simplifies development allowing import of common graphic formats: Bitmaps, JPEGs and animated GIFs

User-programmable macros with math functions and support for floating point
- Extends functionality
- Automates processes

TrueType fonts with Unicode (international) characters and language switching feature
- Makes screens easy to read by allowing bold, italic, underlined, scrolling and blinking text to direct operator's eyes
- Prevents errors by communicating with users in their native languages
- Reduces development and support by allowing inclusion of up to 24 user-selectable languages in a project

UL®, NEMA 4, CE, RoHS,
- Allows use in harsh industrial environments
- Assures prompt product acceptance



Integrate multiple devices to simplify operation of complex systems.



Include the types of displays users understand such as gauges, sliders and bar graphs to make screens intuitive.

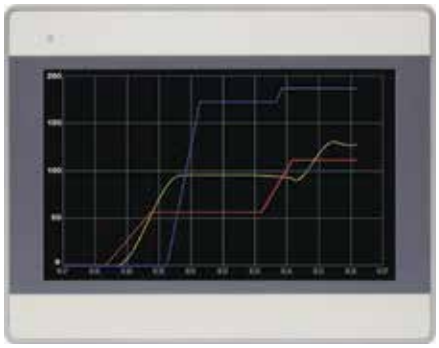

Log and graph process data for quality records and better process control.



Create screens that guide work flow.

Silver Series EM

Dimension and Connection Diagrams

Models TS00-0043-EM00/TS00-0043-EM0B

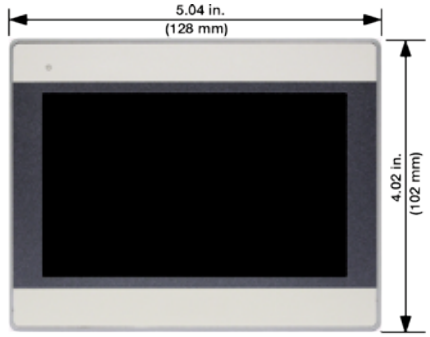

Front View

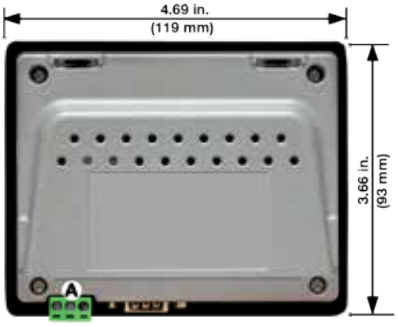

Rear View

A Power connector
B Serial ports
C USB host port
D Ethernet port



Bottom View

Model TS00-0070-EM00/TS00-0070-EM0B

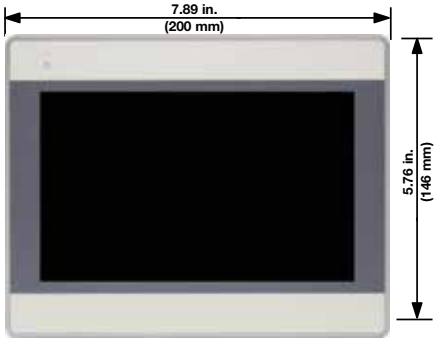

Front View

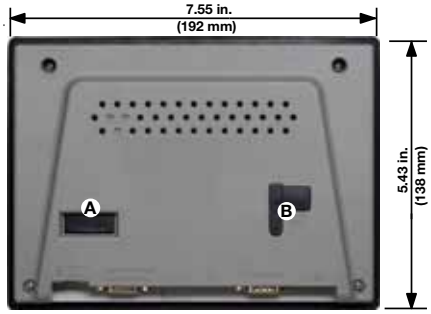

Rear View

A Fuse
B Switches and reset button
C Power connector
D Serial ports
E USB host port
F Ethernet port



Bottom View

Model TS00-0100-EM00

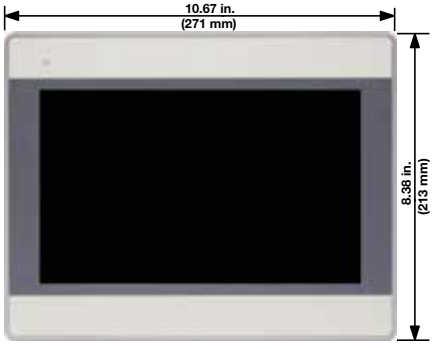

Front View

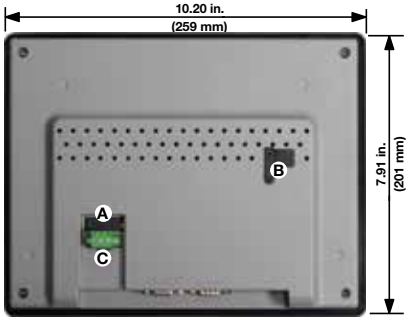

Rear View

A Fuse
B Switches and reset button
C Power connector
D Serial ports
E Ethernet port
F USB host port



Bottom View

Silver Series EM

	Model Number		
Feature	**TS00-0043-EM00/TS00-0043-EM0B**	**TS00-0070-EM00/TS00-0070-EM0B**	**TS00-0100-EM00**
Processor Type	600MHz, 32-bit, RISC, fanless		
Memory	128MB Flash, 128MB DRAM		
Ethernet Port	10/100 Base-T (RJ45)		
Serial Ports	COM1: RS-232 or RS-485 (2-wire or 4-wire) COM3: RS-485 (2-wire)		
USB Host (Type A) Version 2.0	1 each		
Real Time Clock	Built-in		
Audible Alarm and Key Chirp	Piezoelectric buzzer		
Display Type	TFT LCD		
Resolution (Pixels)	480 x 272	800 x 480	
Colors	16 million		262 thousand
LED Backlight Brightness	500 cd/m^2	350 cd/m^2	300 cd/m^2
Contrast Ratio	500:1		
Viewing Angle	Top: 50°, bottom, right, left: 70°	Top: 60°, bottom, right, left: 70°	Top: 45°, bottom, right, left: 65°
Backlight Longevity	30,000 hours		
Touch-Screen Type	4-wire analog resistive		
Touch-Screen Resolution	Continuous		
Touch-Screen Light Transmission	Greater than 80%		
Touch-Screen Lifespan	1,000,000 activations min.		
Operating Temperature	32 to 122°F (0 to 50°C)		
Storage Temperature	-4 to 140°F (-20 to 60°C)		
Relative Humidity	10 to 90% @ 40°C (non-condensing)		
Operating Shock Resistance	10 to 25Hz (X, Y, Z direction 2G, 30 min.)		
Environmental Ratings	NEMA 4 (IP65) indoor only		
Agency	CE, cULus, RoHS	Class 1, Division 2, CE, cULus, RoHS	CE, cULus, RoHS
Enclosure	Plastic molded		
Mounting	Panel		
Dimensions Cutout (W x H)	4.69 x 3.66 in. (119 x 93 mm)	7.55 x 5.43 in. (192 x 138 mm)	10.20 x 7.91 in. (259 x 201 mm)
Dimensions Overall (W x H x D)	5.04 x 4.02 x 1.26 in. (128 x 102 x 32 mm)	7.88 x 5.76 x 1.34 in. (200 x 146 x 34 mm)	10.67 x 8.38 x 1.57 in. (271 x 213 x 40 mm)
Weight	0.55 lbs (0.25 kg)	1.31 lbs (0.6 kg)	2.9 lbs (1.3 kg)
Input Power: Voltage	24VDC		
Input Power: Current	300mA max.	350mA max.	400mA max.

EZwarePlus Software System Requirements

Compatible Operating Systems:

- Windows® 10, 8.1 and 7

Silver Series EM

EZwarePlus Software Suite

The EZwarePlus software suite includes EasyConverter, EZwarePlus screen editor. Utility Manager and Recipe Editor programs.



Utility Manager uploads and downloads projects to and from the Silver Series EM OIT, opens compiled projects in simulation and launches the other EZwarePlus programs.

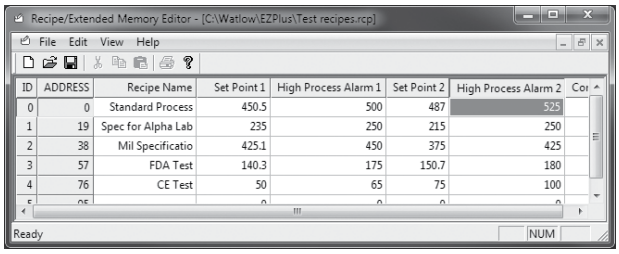

The Recipe Editor configures memory files for use with Silver Series EM OITs and allows offline creation of recipes.

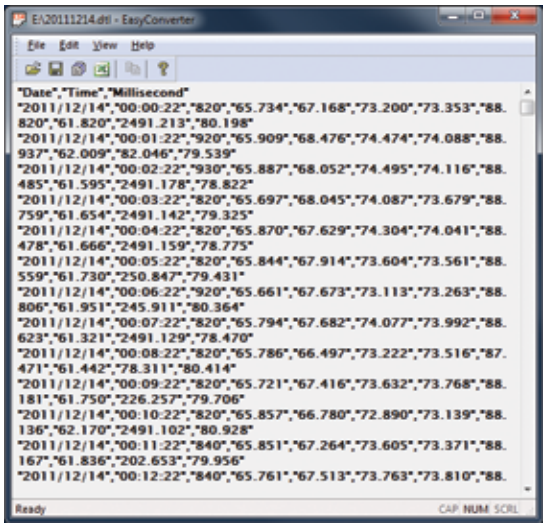

EasyConverter converts log files saved by the Silver Series EM OIT to file formats used by popular Windows® software such as Microsoft® Excel®.

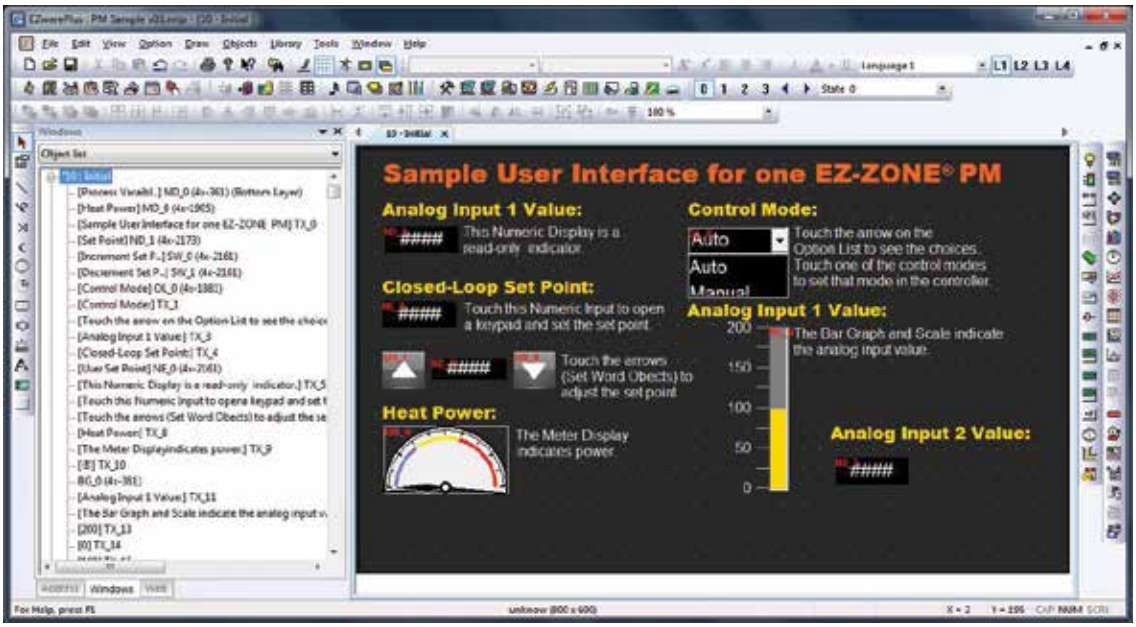

EZwarePlus provides a graphical screen designing environment with point-and-click access to features and drag-and-drop ease.

Silver Series EM

Connectivity

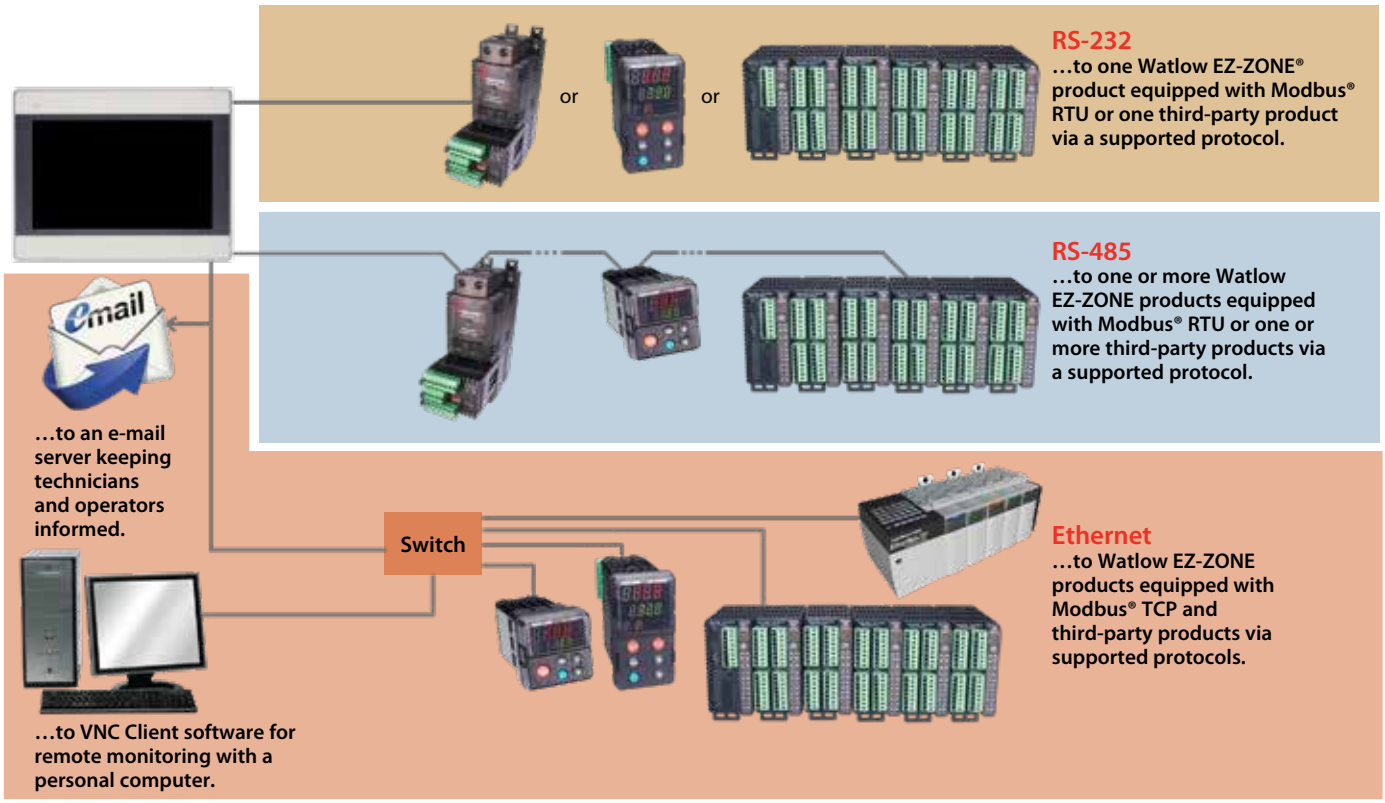

Ordering Information

Part Number	Description
TS00-0043-EM00	4.3 in. (480 x 272) color TFT LCD touch screen; two-tone, light gray bezel; USB host; two serial ports and Ethernet
TS00-0043-EM0B	4.3 in. (480 x 272) color TFT LCD touch screen; two-tone, dark gray bezel; USB host; two serial ports and Ethernet
TS00-0070-EM00	7 in. (800 x 480) color TFT LCD touch screen; two-tone, light gray bezel; USB host; two serial ports and Ethernet
TS00-0070-EM0B	7 in. (800 x 480) color TFT LCD touch screen; two-tone, dark gray bezel; USB host; two serial ports and Ethernet
TS00-0100-EM00	10 in. (800 x 480) color TFT LCD touch screen; two-tone, light gray bezel; USB host; two serial ports and Ethernet

Accessories

Part Number	Description
0601-0001-0000	Controller support tools DVD-ROM with programming software and product manuals
0830-0750-0000	Power supply, input: 85-264VAC, output: 24VDC, 1.7A, 40W (not Class 2)
0847-0299-0000	Class 2 power supply, input: 90-264VAC, output: 24VDC, 1.3A, 31W
0219-0388-0000	TS00-0043-EM00 and TS00-0043-EM0B communication cable, 5-foot, COM1 (RS-485, 2-wire) to bare wires for Watlow EZ-ZONE® controller screw terminals
0219-0374-0000	TS00-0070-EM00, TS00-0070-EM0B or TS00-0100-EM00 communication cable, 5-foot, COM1 (RS-485, 2-wire) to bare wires for Watlow EZ-ZONE controller screw terminals
0830-0782-0000	Package of 5 ea. protective screen covers for the TS00-0043-EM00 and TS00-0043-EM0B
0830-0753-0000	Package of 5 ea. protective screen covers for the TS00-0070-EM00 and TS00-0070-EM0B
0830-0754-0000	Package of 3 ea. protective screen covers for the TS00-0100-EM00

EZ-ZONE® RUI and Gateway

The EZ-ZONE® Remote User Interface (RUI and communications gateway) can be utilized as a communication gateway device to save cost, space and wiring when digital communications is being used with two or more EZ-ZONE controllers. The EZ-ZONE RUI can also serve as a display for showing all parameter values for up to 16 EZ-ZONE controllers, again saving cost, space and wiring expenses.



Indicator Features and Benefits—Remote User Interface (RUI)

Single user interface device or location to access multiple controllers

- Easy accessibility to all controllers and all parameters from a central location by using one RUI display
- Reduces component material costs by using a single RUI to display multiple control zones
- Eliminates cost and complexity from bringing all controller related input and output wiring to the front panel

Flexible use of a display interface

- Can be used when needed during normal machine production, for OEM prototype design purposes or for remote troubleshooting scenarios
- Ability to use more than one RUI indicator to display additional data including temperature and current (ammeter) to improve user system interface

Communications Gateway Features and Benefits

A single RUI and gateway provides field bus access for up to 16 EZ-ZONE controllers

- Lowers solution cost when field bus communications is required for multiple loops

Expand communication protocols to all EZ-ZONE controllers

- Ability to utilize multiple communication protocols for different user preferences. Flex between different communication protocols while still maintaining a reduced level of inventory

Delivers multiple communication protocol options

- Ability to connect EZ-ZONE controllers to communication networks utilizing
  - Modbus® RTU
  - DeviceNet™
  - Ethernet/IP™
  - Modbus® TCP
  - PROFIBUS DP

Additional Features

EZ-ZONE P3T armor sealing system

- Complies with NEMA 4X, IP65 RUI
- Offers water and dust resistance, can be cleaned and washed down

EZ-KEY (RUI)

- Programmable EZ-Key is a functional key programmable by the user to perform simple one-touch operation of repetitive user activities

Compact package

- Reduces required panel size for 1/16 DIN
- Utilizes less depth behind panel allowing for mounting in tight spaces

Touch-safe package

- Complies with IP2X which increases safety for user

Agency approvals: UL® Listed, CSA, CE, RoHS, W.E.E.E., SEMI F47-0200, Class 1, Div. 2 rating on selected models

- Meets applications requiring agency approvals

Three-year warranty

- Provides product support and protection

EZ-ZONE RUI and Gateway

Specifications

Line Voltage/Power
- Universal high voltage 100 to 240VAC, +10%/-15%; (85-264VAC), 50/60Hz, ±5%
- Low voltage 20 to 28VAC or 25 to 40VDC, 50/60Hz, ±5% for RUI only in short case version
- Low voltage 20 to 28VAC or 12 to 40VDC, 50/60Hz, ±5% for RUI and Gateway in long case version
- Data retention upon failure via nonvolatile memory

Environment
- 0 to 149°F (-18 to 70°C) operating temperature
- -40 to 185°F (-40 to 85°C) storage temperature
- 0 to 90% RH, non-condensing

Wiring Termination—Touch-Safe Terminals
- Terminals touch safe, removable, 12 to 22 AWG

DIN Sizes
- 1/16 DIN

Display Update Rate
- 1HZ

Operator Interface
- Dual 4 digit, 7 segment LED displays
- Forward, backward, up and down keys plus a customer-programmable function key - EZ key

Communication Options
- Standard bus - ships with all EZ-ZONE products
- EIA-235/485, Modbus® RTU
- EtherNet/IP™, Modbus® TCP, 10 BASE-T/ 100 BASE-TX
- DeviceNet™
- PROFIBUS DP

Agency Approvals
- cULus® UL®/EN/CSA C22.2 No. 61010-1 listed, File E185611 for long case models
- cULus® UL®508/EN/CSA C22.2 No. 61010-1 listed, File E102269 for short case models
- CSA C22.2 No. 14 (short case) No. 24 (long case), File 158031
- UL® 50 4X indoor locations, NEMA 4X, IP65 front seal
- cULus® ANSI/ISA 12.12.01-2007, CSA-C22.2 No. 213-1987, Class 1, Div. 2, Groups A, B, C and D, temperature code T4A, File E184390 (optional)
- CE, RoHS by design, W.E.E.E.
- SEMI F47-0200 when powered at 24V or greater

RUI (EZKB) Utilized as a Communication Gateway Device

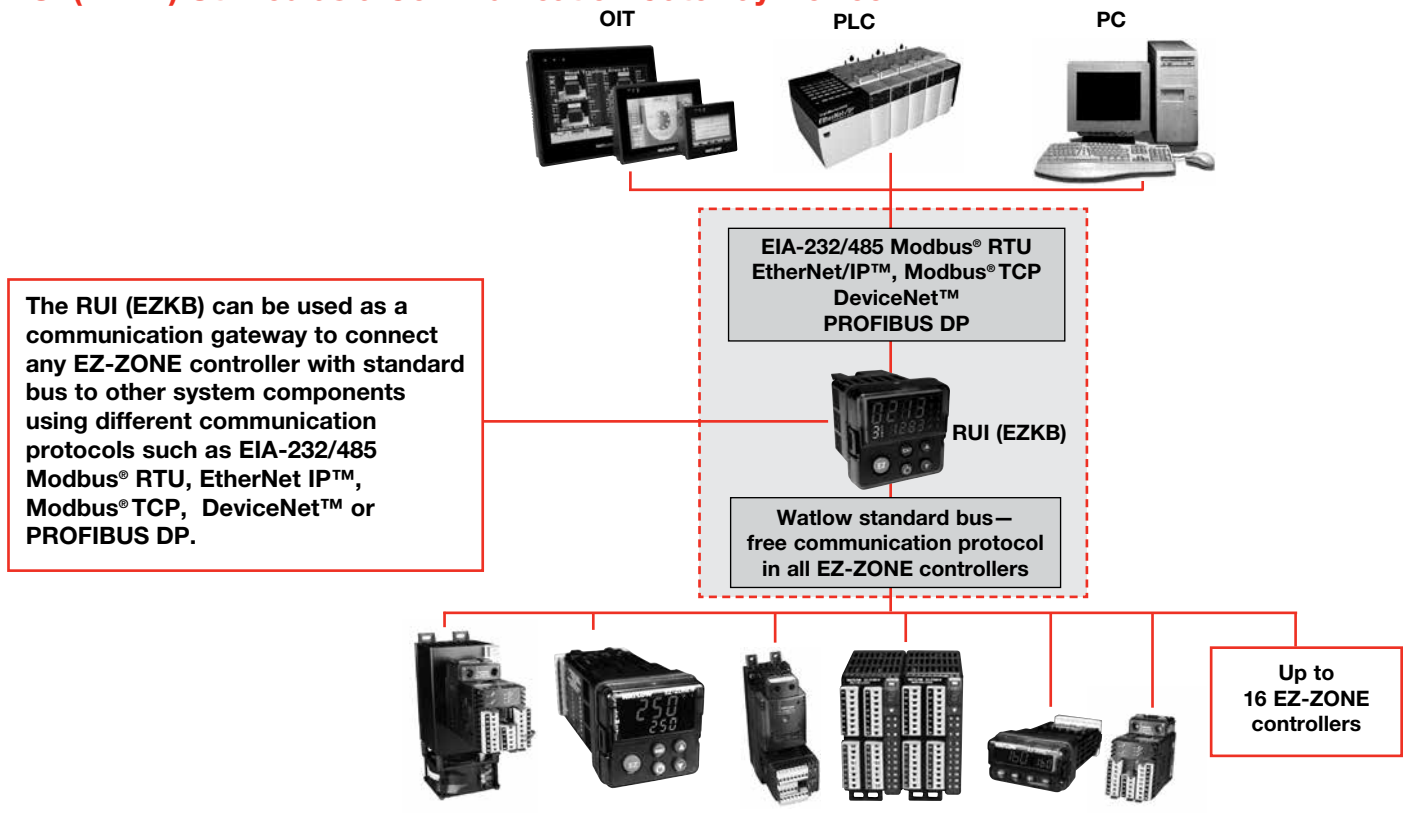

EZ-ZONE RUI and Gateway

Remote User Interface (RUI)—Dimensional Drawings

Front View

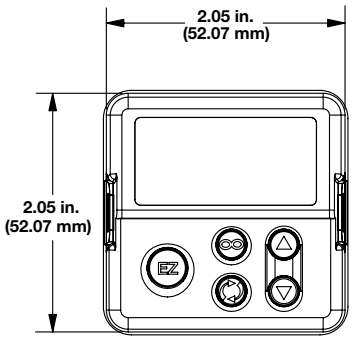

Short Case Version

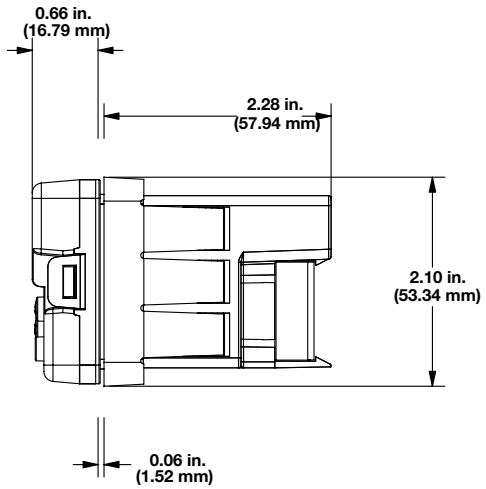

Long Case Version

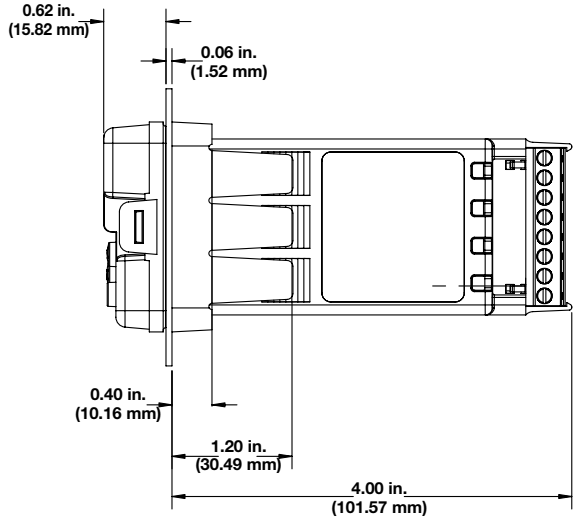

Accessory—DIN-Rail Mounting Bracket

Part Number: 0822-0586-P002

Front View

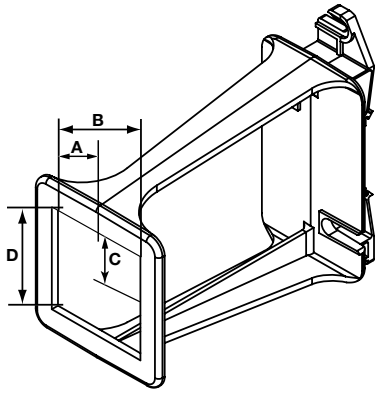

Dim. A	Dim. B	Dim. C	Dim. D
0.886 in. (23 mm)	1.772 in. (45 mm)	0.886 in. (23 mm)	1.772 in. (45 mm)

Rear View

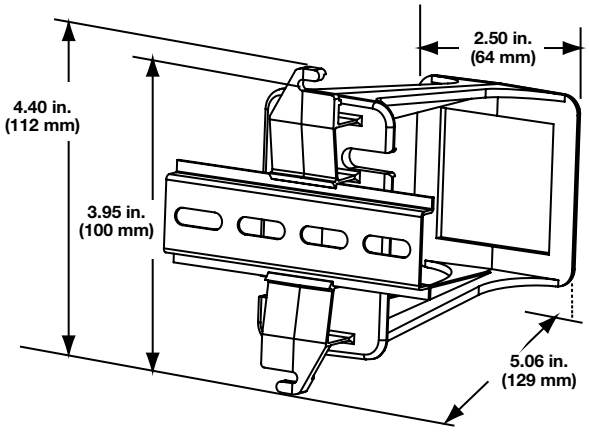

EZ-ZONE RUI and Gateway

Ordering Information

Part Number

① ② ③	④ Remote User Interface		⑤ Power Supply Voltage for RUI	⑥ Comm. Gateway Options	⑦ ⑧ Custom RUI		⑨ ⑩ Future Options	⑪ ⑫ Custom Options
EZK		-				-	AA	

④	Remote User Interface (RUI)
B =	Basic 1/16 DIN

⑤	Power Supply Voltage for RUI
L =	Low voltage 24-28VAC/VDC
H =	Universal high voltage 100-240VAC/VDC

⑥	Communication Gateway Options* (Standard Bus Always Included)
A =	None
2 =	EIA-232/485 Modbus® RTU
3 =	EtherNet/IP™/Modbus® TCP
5 =	DeviceNet™
6 =	PROFIBUS DP
* Options 2 through 6 require the long case dimensions	

⑦ ⑧	Custom RUI
AA =	None
XX =	Custom options, contact factory

⑪ ⑫	Custom Options
AA =	None
12 =	Class 1, Div. 2 (only available with communication options 2, 3, 5 and 6)

SERIES TM

The SERIES TM temperature indicator from Watlow provides an economical solution for applications requiring temperature monitoring and display. Square 1/8 DIN panel mount and DIN-rail mount packaging options are available. A red, four-character, seven-segment LED display indicates the process value. The microprocessor-based design provides significant improvements in performance, repeatability and accuracy over analog indicators.

The indicators are UL® approved and include CE approvals. Panel mount indicators include NEMA 4X/IP65 seal protection. Watlow's SERIES TM temperature indicators include industry leading service and support and are backed by a three-year warranty.



Features and Benefits

Four character LED display
- Improves accuracy

Multiple mounting options
- Minimizes installation time

Fahrenheit or Celsius operation with indication
- Offers application flexibility

Agency approvals
- Meets certification requirements/compliance

Microprocessor-based technology
- Ensures accurate repeatable indication

Typical Applications

- Food preparation
- Industrial machinery
- Packaging
- Plastics processing

Specifications

Operator Interface
- 4-digit, 7-segment LED displays, 7 mm (0.28 in.) high
- °F or °C indicator

Standard Conditions For Specifications
- Rated line voltage, 50 to 60Hz, 0 to 90% RH non-condensing, 15-minute warm-up
- Calibration ambient range: 77°F (25°C) ±3°C

Thermocouple Input
- Grounded or ungrounded
- Type E, J, K, T thermocouple types
- >10 MΩ input impedance
- 250 nV input referenced error per 1Ω source resistance

RTD Input
- 2-wire platinum, 100Ω
- DIN curve (0.00385 curve)
- 125 µA nominal RTD excitation current

Input Accuracy Span Range

Type E:	-328	to	1470°F	or	-200	to	800°C
Type J:	32	to	1382°F	or	0	to	750°C
Type K:	-328	to	2282°F	or	-200	to	1250°C
Type T:	-328	to	662°F	or	-200	to	350°C
RTD (DIN)	-328	to	1472°F	or	-200	to	800°C

Thermocouple Input Accuracy
- Calibration accuracy: ±1% of input accuracy span, ±1° at standard conditions and actual calibration ambient. Exception: Type T, ±2.4% of input accuracy span for -328 to 32°F (-200 to 0°C)
- Temperature stability: ±0.3° per degree change in ambient

SERIES TM

Specifications *(Continued)*

RTD Input Accuracy

- Calibration accuracy ±1% of input accuracy span ±1° at standard conditions and actual calibration ambient
- Temperature stability: ±0.2° per degree change in ambient

Indication Ranges

Type E:	-328	to	1470°F	or	-200	to	800°C
Type J:	-346	to	1900°F	or	-210	to	1038°C
Type K:	-454	to	2500°F	or	-270	to	1370°C
Type T:	-454	to	750°F	or	-270	to	400°C
RTD (DIN)	-328	to	1472°F	or	-200	to	800°C

Agency Approvals

- CE①, W.E.E.E., RoHS EU Directive (2002-95-EC)
- UL® 873 recognized temperature indicator, File # E43684
- UL® 197 reviewed for use in foodservice appliances
- Temperature indicator CSA 22.2 No. 24, File # 30586
- Front panel mount models with gasket
  - UL® 50 Type 4X indoor use only
  - NEMA 4X/IP65 approved

Terminals

- 0.25 in. (6.3 mm) quick connect, push on terminal or removable screw style terminal block

Power

- 24VAC +10%; -15%; 50/60Hz, ±5%
- 120VAC +10%; -15%; 50/60Hz, ±5%
- 230 to 240VAC +10%; -15%; 50/60Hz, ±5%
- 10VA max. power consumption

Operating Environment

- 32 to 158°F (0 to 70°C)
- 0 to 90% RH, non-condensing
- Storage temperature: -40 to 185°F (-40 to 85°C)

Dimensions

- DIN-rail model can be DIN-rail or chassis mount DIN-rail spec DIN 50022, 1.38 x 0.30 in. (35 x 7.5 mm)

Style	Width	Height	Depth
DIN-rail	3.08 in. (78.1 mm)	4.42 in. (112.3 mm)	3.57 in. (90.7 mm)
Square 1/8 DIN Panel	2.85 in. (72.4 mm)	2.85 in. (72.4 mm)	Behind panel 2.04 in. (51.7 mm)

① See declaration of conformity.

Ordering Information

Indicator only, 4-character, 7-segment display

Part Number

①②	③	④	⑤	⑥	⑦⑧⑨⑩	⑪⑫⑬⑭	⑮
	Power Supply	Package	Sensor Type & Scale				Overlay/ Custom Options
TM				A	AAAA	AAAA	

③	Power Supply
B =	120VAC
D =	230 to 240VAC
F =	24VAC

④	Package
1 =	Panel mount, 1/8 in. DIN square - spade terminals
2 =	DIN-rail mount - spade terminals
5 =	Panel mount, 1/8 in. DIN square - screw terminals
6 =	DIN-rail mount - screw terminals
A =	NEMA 4X panel mount - spade terminals
C =	NEMA 4X panel mount - screw terminals

⑤	Sensor Type & Scale
H =	T/C Type J °F (-346 to 1900°F)
J =	T/C Type J °C (-210 to 1038°C)
K =	T/C Type K °F (-454 to 2500°F)
L =	T/C Type K °C (-270 to 1370°C)
M =	T/C Type T °F (-454 to 750°F)
N =	T/C Type T °C (-270 to 400°C)
P =	RTD °F (-328 to 1472°F)
R =	RTD °C (-200 to 800°C)
S =	T/C Type E °F (-328 to 1470°F)
T =	T/C Type E °C (-200 to 800°C)

⑮	Overlay/Custom Options
A =	Standard with Watlow logo
1 =	Standard without Watlow logo

COMPOSER®

COMPOSER® is Watlow's new, easy-to-use software for configuring and customizing controllers. Use it to optimize Watlow's F4T®, D4T™ and EZ-ZONE® PM and RM controllers for specific applications. Task-specific views simplify all aspects of commissioning new controllers including managing the inputs and outputs from pluggable flex modules, setting up functions such as control loops and alarms and creating and editing profiles. COMPOSER software is included on the "Watlow Support Tools" DVD and available for download at www.watlow.com.

Features and Benefits

Function block diagram with live data and error indication

- Enables application-specific configuration of controllers
- Depicts the configuration visually making it easy to understand and explain to others
- Speeds up application testing and troubleshooting

Multi-language support

- Prevents errors by communicating with users in their own languages

System image files contain complete configuration

- Makes it fast and easy to duplicate settings from one system to another
- Simplifies sending configurations to remote sites
- Provides backup of settings to restore if settings are changed or controller is replaced

Dashboard view

- Makes it easy to connect to controllers
- Clearly indicates when there are configuration errors that need to be addressed
- Allows downloading configuration files without allowing access to setup and configuration views

Opens and displays saved configuration image files

- Simplifies supporting remote users
- Makes it easy to inspect configuration files

Configurable interface

- Lets users adjust window sizes and positions to work efficiently

Integrated video tutorials and help

- Speed up commissioning by demonstrating configuration steps
- Simplifies access to function block and parameter descriptions
- Reduces configuration errors
- Helps the user take full advantage of available features

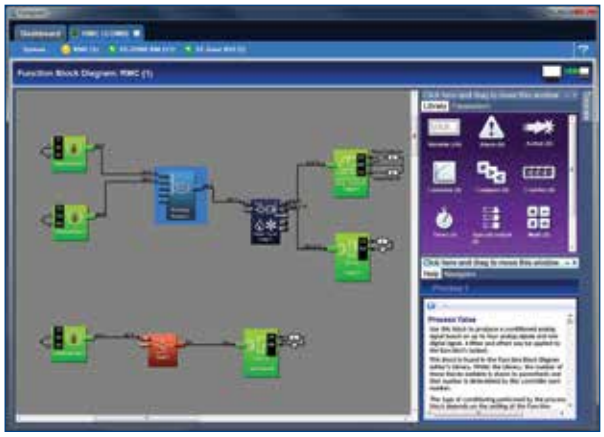

Illustrations from COMPOSER

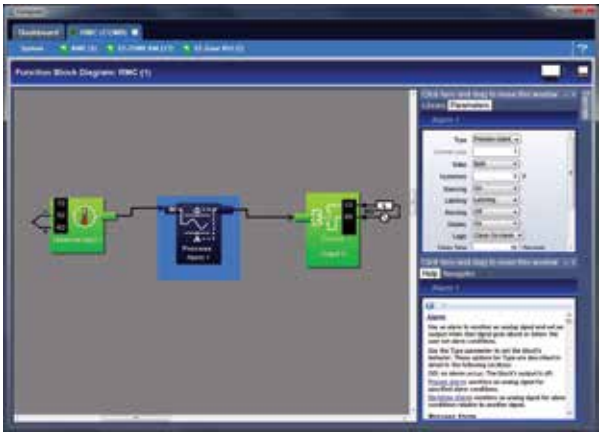

Function block diagram makes it easy to visualize application solutions.

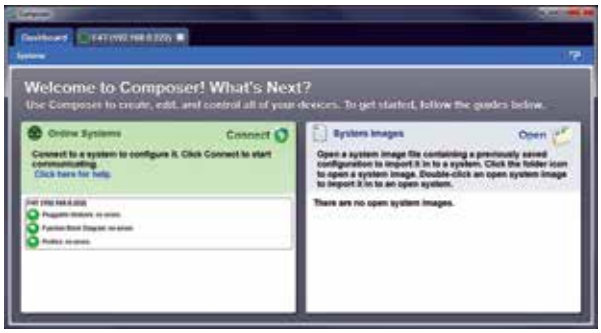

Dashboard makes it easy to connect, indicates configuration errors and allows downloading configuration files without allowing access to setup.

COMPOSER

Technical Data

Additional Features and Benefits for F4T

Profile editor

- Speeds up profile creation and editing
- Allows maintenance of profile list in controllers from a remote PC
- Makes it easy to move profiles from one controller to another
- Exports profiles to PC files for backup and portability

Fast, reliable Ethernet support

- Easily connects to 1 or more controllers
- Minimizes time to read and write configuration settings

Pluggable flex module management

- Simplifies configuration by clearly indicating which hardware is present
- Shortens commissioning by allowing user to configure controller for flex modules prior to installing them

Security configuration

- Allows OEMs and supervisors to limit permissions to specific features
- Controls access via COMPOSER and controller
- Prevents errors and reduces downtime by preventing undesired configuration changes

Calibration view with on-screen instructions and automation

- Reduces downtime by simplifying the calibration verification procedure

Features by Supported Product

Feature	F4T	D4T	EZ-ZONE RM	EZ-ZONE RUI	EZ-ZONE PM	EZ-ZONE ST
Connect via Ethernet	✓	✓				
Connect via 485			✓	✓	✓	✓
Function block diagram view	✓	✓	✓		✓	
System overview	✓	✓	✓	✓	✓	✓
Device details	✓	✓	✓	✓	✓	✓
Save and import system images	✓	✓	✓	✓	✓	✓
Network setup	✓	✓	✓	✓	✓	
View image files offline*	✓	✓	✓	✓	✓	
Personalization view	✓	✓	✓	✓	✓	
Password security setup	✓	✓	✓		✓	✓
Ramp and soak profile editing	✓					
Calibration unity	✓	✓				
Pluggable modules view	✓	✓				

*Offline viewing of saved system images except profiles.

Specifications

Supported Products

Product	Minimum Version
PM PLUS™	1.0
RMA PLUS™	1.0
F4T	2.0
D4T	3
EZ-ZONE PM	15
EZ-ZONE RM: RMC, RME, RMS, RMH, RML	9
EZ-ZONE RM: RMA	5
EZ-ZONE RUI	6

Compatible Operating Systems

- Windows® 10
- Windows® 8.1

Minimum System Requirements

- Microprocessor: 1 gigahertz (GHz) or faster 32-bit or 64-bit
- Memory: 1 gigabyte (GB) RAM (32-bit) or 2 GB RAM (64-bit)
- Disk space: 250 megabytes (MB)
- Video: 1280 x 720 or higher
- Port for controller communications: Ethernet for F4T or EIA-485 half duplex (2-wire) for EZ-ZONE RM and PM

Illustrations from COMPOSER for F4T



Pluggable modules view simplifies configuration by showing hardware present.

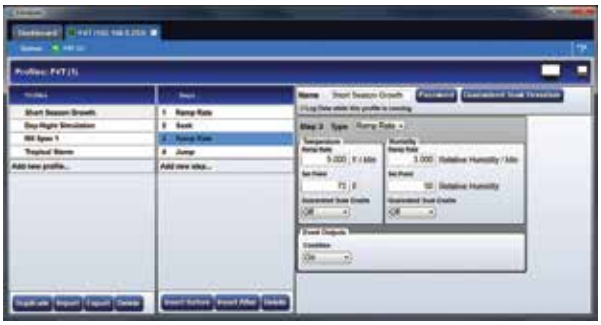

EZ-LINK™ Mobile App

Watlow's EZ-LINK™ mobile app allows users to easily set up and monitor Watlow PM PLUS™ and EZ-ZONE PM controllers via Bluetooth® wireless technology. The app is available free-of-charge from the app stores for phones and tablets, and provides access to the controller's parameters with fully spelled out names in plain text with help topics that explain each parameter and option.

When connected to a controller, the app's dashboard view displays up to 20 parameters. Users can configure which parameters appear on the dashboard view with the controller's custom home page. The all parameters feature in the app allows users set up the controller's inputs, control settings, alarms, outputs and other features and functions.

In addition to controller setup, monitoring and adjusting, the EZ-LINK mobile app provides many benefits to the user including password protection, alarm and error indicators, connection to Watlow for feedback and support and accessing device information such as firmware version, part number and serial number.

The app works with all PM PLUS and 1/16 DIN EZ-ZONE PM controllers and limits with Bluetooth® wireless technology. This option is approved for use in the U.S., Australia, Canada, Colombia, the European Union, Japan and New Zealand with more locations coming soon.



Features and Benefits

Wireless communication

- Connect to controllers up to 70 feet (21.3 meters away)
- Eliminates need to access the back of the controller, USB-to-485 converter and error-prone wiring

Save and import system image files via Bluetooth®

- Makes a complete record of controller settings in a file
- Accurately copies or restores saved settings from a file to a controller

Portable system image files

- Send and receive files via email, messaging and other sharing methods
- View the controller configuration by opening the file on a PC with Watlow's COMPOSER software
- Create a file with COMPOSER and email it to a phone to support updating controllers in the field with the app

All parameters feature

- Allows user to interactively set up the controller's inputs, control settings, alarms, outputs and other functions

Uses controller's custom home page and password security settings

- Adapts to the application by presenting the same parameters as found on the controller's custom home page
- Allows full access, read-only access or no access to home page and all parameters feature based controller's password protection settings

Visual device ping and controller naming

- Identifies which controller is connected when several controllers are within range
- Allows user to name the controller and easily find it again the next time

EZ-LINK Mobile App

Illustrated Features



Provides access to controller's home page parameters

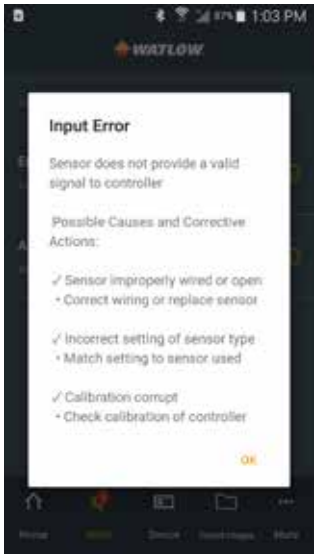

Decodes alarms, errors and messages

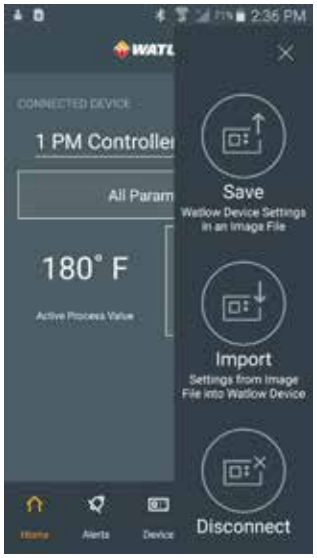

Save and import system image files via Bluetooth®



Makes setting up controllers easy with readable text...



...intuitive operation

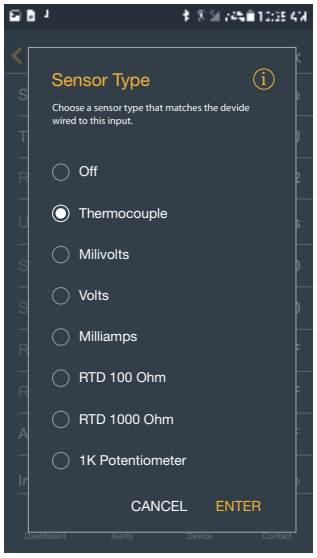

...and help for each parameter

Compatibility

The EZ-LINK mobile application is compatible with all PM PLUS and 1/16 DIN EZ-ZONE PM controllers and limits that have the Bluetooth® communications option.

System Requirements

Android™

- Compatible versions: 6, 7, 8 and 9

Apple®

- Compatible versions: 10, 11 and 12

Supported devices

- Designed for phones, compatible with tablets. Download the EZ-LINK App at Google Play for Android™ or App Store for iPhone®.

ASPYRE® Configurato

ASPYRE® Configurator is Watlow's easy-to-use software for configuring and customizing ASPYRE power controllers. Use it to optimize Watlow's ASPYRE products for specific applications. Task-specific views simplify all aspects of commissioning new controllers including configuring the use of digital and analog inputs, setting options such as maximum voltage and maximum current, setting up features including feedback, firing mode and communication options and uploading, saving and downloading recipe files that include the complete configuration of a power controller.

ASPYRE Configurator software is included on the "Watlow Support Tools" DVD and available for download at www.watlow.com.



System Requirements

- **Microprocessor:** 1 gigahertz (GHz) or faster, 32-bit or 64-bit
- **Memory:** 1 gigabyte (GB) RAM (32-bit) or 2 GB RAM (64-bit)
- **Disk Space:** 250 megabytes (MB)
- **Video:** 1400 x 1050 or higher
- **Operating System:** Microsoft® Windows® 10, 8.1 or 7
- **Port for controller communications:** USB 1.0 or EIA-485 half duplex (2-wire)

EZ-ZONE® Configurator

EZ-ZONE® Configurator software allows Watlow® EZ-ZONE products to be configured in one simple process. Its interface is flexible and easier to read than the basic remote user interface (RUI). It operates without requiring purchase of communications options as it uses the standard bus communications protocol that is included with all EZ-ZONE products.

The EZ-ZONE Configurator software is available as a free download at www.watlow.com.

Features and Benefits

Communicates with EZ-ZONE products via standard bus protocol

- Works regardless of which communications option is purchased or even when no communication option is purchased

Detects EZ-ZONE devices and reads up configuration

- Allows easy access to any setting

Presents pages and menus as they are in the controller's display, RUI and manuals

- Enables the user to easily locate what they are looking for

Wizard-style editor with menu explorer

- Allows for easy examination of each menu
- Enables the user to skip directly to the parameters they want to work with

On-screen parameter help

- Reduces configuration errors
- Helps the user take full advantage of available features

Copies parameter settings

- Decreases configuration time especially for multi-loop controllers

Saves configuration files on the computer with all the information required to set up a controller

- Preserves settings to archive and recover or simplify setting up of another EZ-ZONE product
- Enables set up files to be emailed or made available to users on a network or via the internet to aid them with set up



View or modify configuration files saved during online editing sessions

- Allows users to get a jump on setting up EZ-ZONE products
- Aids in supporting remote users

Downloads saved configuration files

- Simplifies configuration of EZ-ZONE products

Flexible and smart compatibility checking

- Ensures configuration files are only loaded into devices that are similar enough to the original that the settings make sense

EZ-ZONE Configurato

Technical Data

Illustrated Features



Detects EZ-ZONE devices connected to the computer's communications ports.

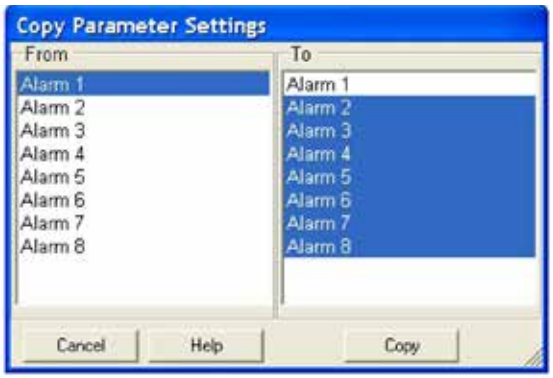

Copy feature speeds up configuration.

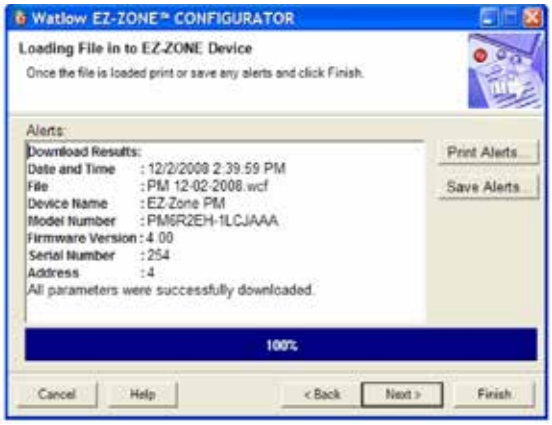

Confirms that parameter downloads were successful and reports exceptions.

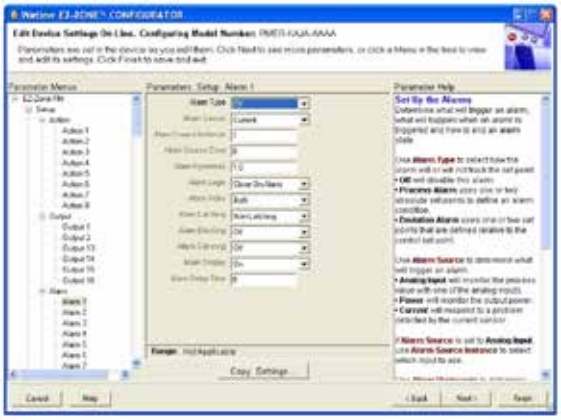

Menu explorer allows users to skip directly to desired parameter or browse each setting.

Compatibility

EZ-ZONE Configurator is compatible with all versions of EZ-ZONE products, but can be used to download configuration files only to products meeting the requirements listed below.

Product	Minimum Firmware Version
EZ-ZONE RUI	3.0
EZ-ZONE ST	4.0*
EZ-ZONE PM	7.0
EZ-ZONE PM Express	1.0
EZ-ZONE RM Control Module	1.0
EZ-ZONE RM Expansion Module	1.0
EZ-ZONE RM Access Module	1.0
EZ-ZONE RM High-Density Control Module	5.0
EZ-ZONE RM High-Density Limit Module	5.0
EZ-ZONE RM High-Density Scanner Module	5.0

*Configuration files may be downloaded to EZ-ZONE ST controllers originally purchased with revision 4.0 or later only.

System Requirements

Minimum Requirements

- 485 communications port: USB port and USB-to-485 converter, or serial COM port (232) and 232-to-485 converter
- Microprocessor: Pentium® IV or equivalent
- Memory: 128 MB RAM (256 MB recommended)
- Disk space: 140 MB (100 MB if Microsoft.NET Framework is already installed.)
- Video: 800 x 600 (1024 x 768 or higher recommended)

Operating System Requirements

- Windows® 10
- Windows® 8.1
- Windows® 7

EZ-ZONE® LabVIEW™ Driver

An instrument driver for National Instruments LabVIEW™ software is available for communicating with Watlow's EZ-ZONE® products via the Standard Bus communications protocol that is included with all EZ-ZONE products.

A LabVIEW™ instrument driver is a software package created with LabVIEW™ that simplifies development of applications such a test software. These instrument drivers include software functions called LabVIEW™ Virtual Instruments (VIs) that are used with LabVIEW™ to communicate with an instrument such as Watlow® EZ-ZONE PM.

The EZ-ZONE LabVIEW™ instrument driver software is available as a free download from www.watlow.com.

Features and Benefits

Supports access to all EZ-ZONE parameters

- Integrates fully with automated applications

Compatible with any EZ-ZONE standard bus communication protocol

- Communicates with any EZ-ZONE product without requiring purchase of a communications option

Four VIs: Initialize, Read, Write and Close—standard features of most LabVIEW™ instrument drivers

- Provides familiarity for LabVIEW™ users

Working example of a VI (application) that uses the EZ-ZONE instrument driver and includes detailed instructions

- Simplifies integration

Compatibility

The Watlow EZ-ZONE instrument driver is supported by LabVIEW™ versions 8.6 and later.

Documentation

Documentation for using the driver is integral to the driver and installs with it. In order to access each specific EZ-ZONE parameter, each parameter has been assigned a parameter number. The parameter numbers appear in the EZ-ZONE product manuals.

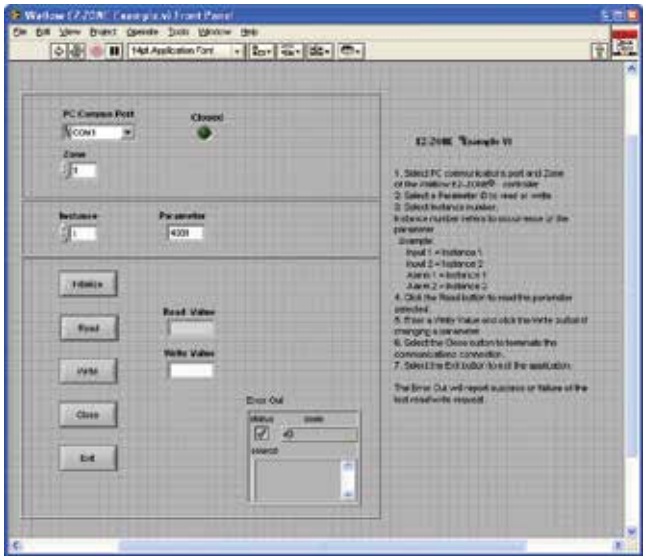

Product Support

For help with the EZ-ZONE driver contact Watlow technical support. LabVIEW™ is supported by National Instruments™ and its dealers.

How to Get the EZ-ZONE Driver

Contact Watlow's technical support for controllers at:
Phone: (507) 494-5656
Email: wintechsupport@watlow.com

Other Drivers

Drivers are also available on the National Instruments™ web site for these Watlow products:

- SERIES 96
- SERIES F4 (single and dual channel ramping controllers)
- SERIES PD (single and dual channel controllers)

EZ-ZONE® GSD Editor

The EZ-ZONE® GSD Editor software allows users to create custom general station description (GSD) files for configuring communications between EZ-ZONE products and other automation equipment supporting the PROFIBUS DP communications protocol.

The EZ-ZONE GSD software is available for download free of charge at www.watlow.com and on the Controller Support Tools DVD-ROM (part number 0601-0001-0000) included with the related Watlow controllers.

Features and Benefits

Creates and edits GSD files

- Enables configuration of DP-V0 (cyclic) communication between EZ-ZONE devices and a PROFIBUS DP master such as a programmable logic controller (PLC)

Allows users to select just the values they need

- Optimizes PLC memory use by allowing cyclical messages to be configured with desired data only
- Speeds up network by eliminating the transmission of unnecessary data as with fixed, vendor-supplied GSD files

Supports EZ-ZONE PM, RM Access Modules and RUI Gateways

- Makes it easy for PROFIBUS DP users to use EZ-ZONE products in their applications

Presents all the parameters found in supported EZ-ZONE device's menus

- Maximizes flexibility in the design of applications

System Requirements

System Requirements:

- Microprocessor: Pentium® IV or equivalent
- Memory: 128 MB RAM (256 MB recommended)
- Disk space: 140 MB (100 MB if Microsoft.NET Framework is already installed.)
- Video: 1024 x 768 or higher
- Microsoft® compatible pointing device (mouse or trackball)

Operating System Recommended:

- Windows® 8
- Windows® 7

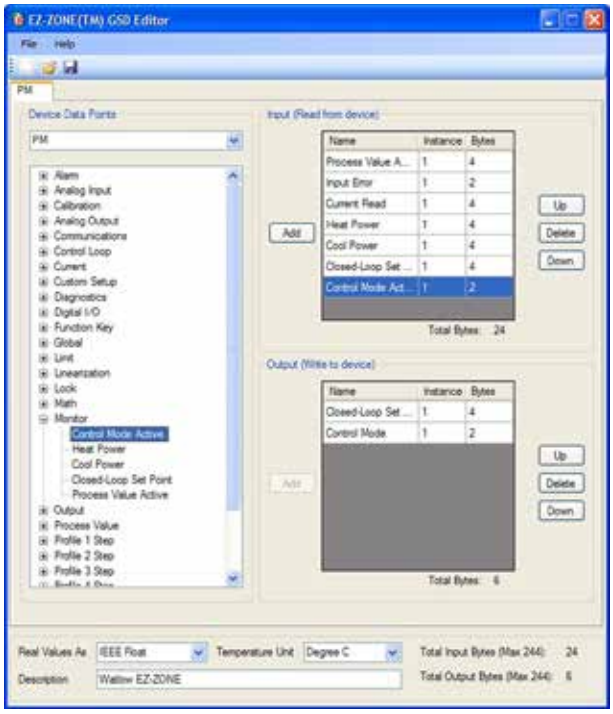

Compatibility

EZ-ZONE GSD Editor software can be used to create and edit GSD files for EZ-ZONE PM controllers with the PROFIBUS DP field communications option and EZ-ZONE ST and PM controllers and RM control systems when connected to an EZ-ZONE RM access module or EZ-ZONE RUI gateway with the PROFIBUS DP option.

EHG® SL10 Software

The EHG® SL10 software allows the user to configure, monitor, log and chart data from Watlow's EHG SL10 integrated multi-function controllers. It provides an easy-to-use and centralized interface for multiple EHG SL10 controllers.

This software gives the user the ability to change set points, label devices and much more all with the click of a key.

The EHG SL10 software is available for download free of charge at www.watlow.com and on the Controller Support Tools DVD-ROM (part number 0601-0001-0000) included with the related Watlow controllers.





Features and Benefits

Automatic network detection and configuration

- Simplifies configuring multi-device networks by setting unique addresses in each device as they are added to the network
- Scans for new controllers added to the network

Manual network configuration

- Connects to and monitors existing controller networks

User definable device names

- Speeds up troubleshooting by allowing users to set names for networked controllers that correlate them with heater locations

Monitor mode

- Displays temperature, color coded alarms and warnings for all networked controllers
- Centralizes monitor function and eliminates time spent checking alarm states at the heater

Network state indicator

- Simplifies and reduces errors when controlling many points
- Shows at a glance if any controller has a warning or alarm condition

Charting

- Improves system operation by allowing engineers and operators to see zone temperature trends in real time

Data logging

- Saves time and effort by eliminating the need to manually record temperatures
- Simplifies troubleshooting by providing a record of zone temperatures

Configure mode

- Simplifies and speeds up changing set points and other control parameters

Password protected setup

- Prevents unauthorized changes to alarm set points, tuning and control settings

Recipe manager

- Speeds up commissioning new devices by allowing saved recipes to be downloaded to multiple controllers
- Reduces data entry errors by saving known good settings

Ping function blinks indicator on selected controller

- Reduces errors by allowing technicians to confirm device identities

Compatibility

EHG SL10 software can be used to configure EHG SL10 controllers when run on a computer connected to the controllers via an EIA-485 (also known as RS-485) network. For most computers a 485 converter is required.

System Requirements

Operating System

- Windows® XP Professional

SpecView SCADA Software

SpecView is easy-to-use Supervisory Control and Data Acquisition (SCADA) software for Watlow® controllers, including the F4T® process controller and EZ-ZONE® controllers as well as third-party products. Watlow's single point of support for hardware, software and application needs ensures knowledgeable and prompt responses to questions or concerns.

This competitively priced package includes field-proven features, many suggested by loyal users. Built-in support and auto-detect for Watlow controllers make setup quick and simple. SpecView is ideal for industrial applications with support for barcode readers and touch-screen operation.

To try before purchasing, download SpecView from the Watlow website and run in the time-limited demo mode.

Features and Benefits

Built-in support and auto-detect for controllers
- Saves set-up time
- Eliminates the need to learn communications protocols
- Integrates devices from multiple vendors

Watlow EZ-ZONE standard bus communications protocol
- Communicates with any EZ-ZONE product without requiring purchase of a communications option

Highly configurable trending/graphing
- Simplifies monitoring and troubleshooting processes and machines
- Provides a permanent, unalterable record of results

Flexible data logging and report generator
- Helps users comply with regulatory requirements including AMS 2750D NADCAP
- Reduces labor and increases accuracy by automating data collection
- Simplifies record keeping by consolidating measurements, operator comments and other information into Excel® - compatible report formats
- Allows data to be grouped in user-defined batches
- Records operator actions

Easy-to-build, customizable screens
- Allows creation of application-specific screens, which can automate tasks, decrease training time and simplify monitoring and operation
- Highlights specific parameter values with user-set color dynamics and provides bar graphs for "at-a-glance" monitoring
- Limits access with passwords if desired



Easy-to-use recipe manager
- Saves snapshot of current parameter settings
- Eliminates operator error when setting machine parameters
- Reviews and edits complex programmer profiles

Historical replay option
- Helps troubleshoot processes by allowing review of recorded data

Remote access option
- Allows multiple, identical operator stations for convenient access
- Reduces downtime and increases utilization with monitoring and access over LAN, modem or Internet

System Requirements

Compatible Operating Systems:
- Windows® 10, 8.1, 8, 7, Vista, Server 2003 and XP

Minimum System:
- Pentium® processor or equivalent AMD
- 1GB RAM (2GB or more recommended)
- 100MB hard disk space to install SpecView
- Additional disk space for data logging
- Instrument connection: Serial port or Ethernet
- USB port for the key

Ideal System:
- Intel® Core™ i5 2.6Ghz processor or AMD equivalent
- 2GB RAM
- 500GB hard disk plus enough space for data logging

SpecView SCADA Software

Supported Controllers and Protocols

Controller	Controller's Communication Protocol		
	Standard Bus	Modbus® RTU	Modbus® TCP
D4T™ Data Logger	N/A	✓	✓
F4T	N/A	✓	✓
ASPYRE® Power Controller	N/A	✓	N/A
EZ-ZONE RM, PM and ST	✓	✓ ①	✓ ①
SERIES F4 Ramping	N/A	✓	N/A
SERIES 96, 97, SD	N/A	✓	N/A
POWER SERIES™	N/A	✓	N/A
MICRODIN	N/A	✓	N/A
SERIES 986, 987, 988, 989	N/A	✓	N/A
CLS200 (standard or ramp/soak)	N/A	✓	N/A
MLS300 (standard or ramp/soak)	N/A	✓	N/A

① Modbus® support for basic operation parameters is included. Automatic detection of EZ-ZONE instruments is not available via Modbus® so configurations must be set up manually. EZ-ZONE ST controllers versions 1 to 3 are supported via Modbus® with a RUI Gateway only.

Application Examples



Track and report batch-specific processing data.

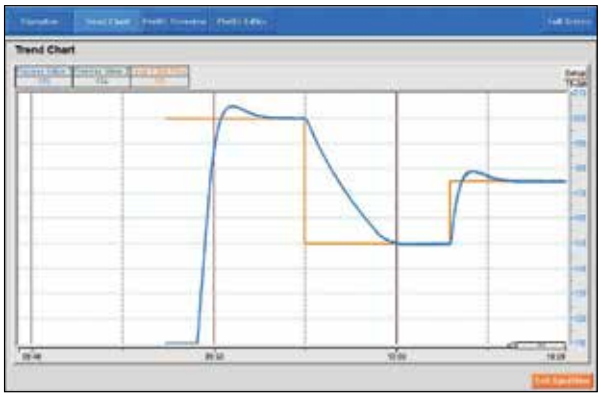

Graph and log process data. Replay data that may have been missed while a user was away. For playback of data older than four hours get the historical replay option.



Create application-specific screens that depict process data so users can relate.

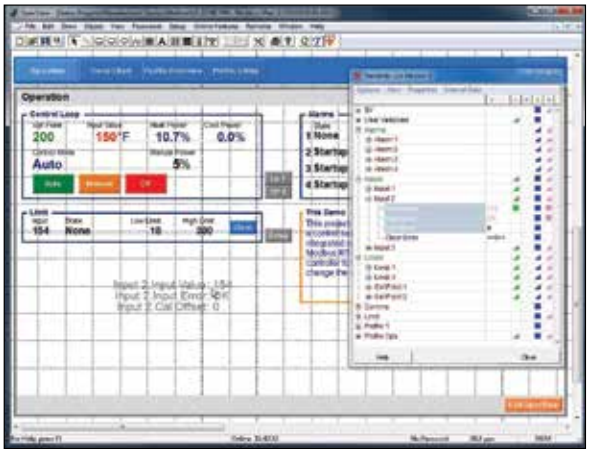

Make screens with drag-and-drop ease.

SpecView SCADA Software

Ordering Information - Standard

Part Number

① ②	③	④	⑤	⑥	⑦	⑧ ⑨	⑩	⑪	⑫	⑬
	Version	Ports	Historical Replay & Strategy Cont.	DDE and OPC	ActiveX Container	Remote Users	Special Watlow Drivers	Third Party Drivers	Update Plan	
SV	S			-			-			0

③ Version	
S =	Standard

④ Ports	
S =	Single
M =	Multiple

⑤ Historical Replay and Strategy Controller	
0 =	None
H =	Historical replay
S =	Strategy controller
B =	Both historical replay and strategy controller

⑥ DDE and OPC	
0 =	None
D =	DDE
C =	OPC client
B =	Both DDE and OPC client

⑦ ActiveX Container	
0 =	None
A =	ActiveX container

⑧ ⑨ Remote Users	
00 =	None
XX =	Number of simultaneous remote users (01 to 99)

⑩ Special Watlow Drivers	
0 =	None
1 =	SERIES F4 programmer

⑪ Third Party Drivers	
0 =	None
1 =	Allen-Bradley® DF1

Note: Special drivers for other third-party products (Honeywell®, Eurotherm®, Mitsubishi®, Yokogawa® and Marathon) are available directly from SpecView.

⑫ Update Plan	
0 =	1 year of free updates
5 =	5 additional years of updates (6 years total)

Ordering Information - Mini

Part Number

① ②	③	④	⑤	⑥	⑦	⑧ ⑨	⑩	⑪	⑫	⑬
	Version	Ports	Historical Replay & Strategy Cont.	DDE and OPC	ActiveX Container	Remote Users	Special Watlow Drivers	Third Party Drivers	Update Plan	
SV	M			-			-			0

③ Version	
M =	Mini (limited to two instrument views)

Note: The mini version is limited to 2 instrument views and may not be appropriate for use with some devices such as profiling and multi-loop controllers where a single device appears as multiple instruments in SpecView.

④ Ports	
S =	Single
M =	Multiple

⑤ Historical Replay and Strategy Controller	
H =	Historical replay
B =	Both historical replay and strategy controller

⑥ DDE and OPC	
0 =	None
D =	DDE
C =	OPC client
B =	Both DDE and OPC client

⑦ ActiveX Container	
0 =	None
A =	ActiveX container

⑧ ⑨ Remote Users	
00 =	None
XX =	Number of simultaneous remote users (01 to 99)

⑩ Special Watlow Drivers	
0 =	None
1 =	SERIES F4 programmer

⑪ Third Party Drivers	
0 =	None
1 =	Allen-Bradley® DF1

Note: Special drivers for other third-party products (Honeywell®, Eurotherm®, Mitsubishi®, Yokogawa® and Marathon) are available directly from SpecView.

⑫ Update Plan	
0 =	1 year of free updates
5 =	5 additional years of updates (6 years total)

SpecView SCADA Software

Ordering Information - Upgrade

Part Number

① ②	③	④	⑤		⑥	⑦	⑧ ⑨		⑩	⑪	⑫	⑬
	Version	Ports	Historical Replay & Strategy Cont.	-	DDE and OPC	ActiveX Container	Remote Users	-	Special Watlow Drivers	Third Party Drivers	Extend or Restart Update Plan	
SV												0

③	Version
U =	No version change; upgrade options only
N =	Upgrade mini to standard

④	Ports
0 =	No upgrade
M =	Multiple

⑤	Historical Replay and Strategy Controller
0 =	No upgrade
H =	Historical replay (already included with SpecView Mini)
S =	Strategy controller
B =	Both (do not order this option with SpecView Mini)

⑥	DDE and OPC
0 =	No upgrade
D =	DDE
C =	OPC client
B =	Both DDE and OPC client

Note: Your upgrade order must be accompanied by the Step 1 code from the Upgrade screen in SpecView. Use the upgrade order form available at www.watlow.com or upon request from Watlow or your authorized distributor.

⑦	ActiveX Container
0 =	No upgrade
A =	ActiveX container

⑧ ⑨	Remote Users
00 =	No upgrade
XX =	Number of simultaneous remote users (01 to 99)

⑩	Special Watlow Drivers
0 =	No upgrade
1 =	SERIES F4 programmer

⑪	Third Party Drivers
0 =	No upgrade
1 =	Allen-Bradley® DF1
Note: Special drivers for other third-party products (Honeywell®, Eurotherm®, Mitsubishi®, Yokogawa® and Marathon) are available directly from SpecView.	

⑫	Extend or Restart Update Plan
0 =	No additional updates
2 =	Extend update plan by 2 years. **Note:** Valid only **prior** to expiration of the update plan.
5 =	Extend update plan by 5 years. **Note:** Valid only **prior** to expiration of the update plan.
U =	Start a new 2-year update plan. **Note:** Select this option to update SpecView after its update plan has expired.
A =	Start a new 2-year update plan. **Note:** Valid one time only when upgrading from version 2.5 to version 3.

SpecView SCADA Software

How to Choose the Correct SpecView Options

Order this option...	If you want to...
Mini Version	Operate a system with data from one or two simple instruments. This option includes historical replay and allows up to two instruments. Note that in some cases, devices such as profiling and multi-loop controllers are represented by more than one instrument, the mini version may not be appropriate.
Standard Version	Be free to expand configurations beyond the two instrument limit of the mini version.
Single Port	Communicate with instruments on only one serial communications port or only via Ethernet only.
Multiple Port	Communicate with instruments on more than one serial communications port and via Ethernet.
Historical Replay	Replay logged data on screens in trends, bar graphs and numeric fields. Without the option, replay is limited to the last four hours of data.
Strategy Controller	Configure SpecView to respond automatically to events such as specific parameter values with actions such as printing the screen, starting logging or download a recipe. Events can also be time or calendar based. Without the strategy controller option there is a two event limit.
DDE	Integrate SpecView with other Windows® programs.
OPC Client	Connect SpecView to instruments via a third-party OPC server.
ActiveX Container	Integrate third-party or customer-written ActiveX controls into SpecView.
Remote Users	Monitor instruments from multiple computers simultaneously. Order the number of remote users corresponding to the maximum number of additional computers needed to connect simultaneously.
SERIES F4 Programmer Driver	Use the computer to manage profiles: program profiles in the computer, save profiles on the computer, or download profiles that are saved on the computer to the SERIES F4.
Allen-Bradley® DF1 Driver	Connect to Allen-Bradley® PLCs (process logic controllers) that support the DF1 protocol
Update Plan	SpecView includes one year of free updates with an option for five additional years. The update period may be extended or restarted with field upgrade options.

EZ-warePLUS

The Silver Series EM programming software, EZwarePlus, is easy to use and features a large variety of built-in screen objects that make it powerful. When creating screens, the user can call upon extensive graphics libraries, import custom graphics and add numeric displays, entry fields, analog meters, bar graphs and trend graphs with just a few mouse clicks. Screen objects are highly customizable, and the user can create libraries of their own objects for repeat use. The online simulator, Ethernet and USB support, make testing and downloading fast.

The EZwarePlus software suite is available for download free of charge at www.watlow.com and on the Controller Support Tools DVD-ROM (part number 0601-0001-0000) included with the related Watlow controllers.

Features and Benefits

Powerful, easy-to-use EZwarePlus programing software

- Requires only a small investment in time to create a useful interface
- Provides the ability to learn additional features as needed
- Provides advanced interface features such as animation and pop-up windows
- Reduces development time by providing extensive graphical libraries and facilitating reuse with user- created libraries

Offline and online simulation

- Speeds up development by making it faster and easier to test projects
- Allows faster creation of fine-tuned interfaces by speeding up iterations

Upload and download password protection

- Prevents users from altering projects
- Protects projects in OITs from accidental overwrite

Extensive graphical libraries and user-created libraries

- Reduces development time and facilitates reuse
- Simplifies development by allowing import of common graphic formats: bitmaps, JPEGs and animated GIFs

Project manager

- Simplifies managing projects for multiple applications

Project compress/uncompress

- Archives all necessary files in one compressed file
- Allows a single file to be saved or delivered as the project source

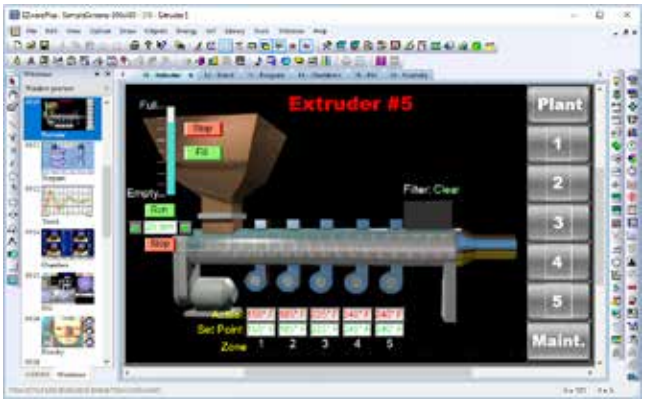

User-programmable macros with math functions and support for floating point

- Extends functionality
- Automates processes

TrueType fonts with Unicode (international) characters and language switching feature

- Makes screen content easy to read by allowing formatting such as bold, italics, underline, scrolling and blinking
- Prevents errors by communicating with users in their native languages
- Reduces development and support by allowing inclusion of up to 24 user-selectable languages in a project

Tag library and address find and replace function

- Simplifies project reuse with similar but not identical controllers

Label library

- Speeds up screen development by eliminating the need to enter the same text multiple times
- Enables on-the-fly language changes for up to 24 languages per project

Library import and export functions

- Reduces errors and speeds up development by eliminating tedious data entry when multiple projects interface with the same devices

Layers, grid, alignment, nudge, space-even and make-same-size tools

- Speeds up creation of smart looking screens by automatically placing objects aligned on the screen
- Gives user precise control over object placement

EZ-warePLUS

Software Suite

The EZwarePlus software suite includes EasyConverter, EZwarePlus screen editor, Utility Manager and Recipe Editor programs.



Utility Manager uploads and downloads projects to and from the Silver Series EM, opens compiled projects in simulation and launches the other EZwarePlus programs.

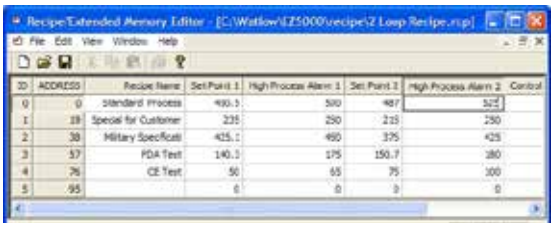

The Recipe Editor configures memory files for use with Silver Series EM OITs and allows offline creation of recipes.

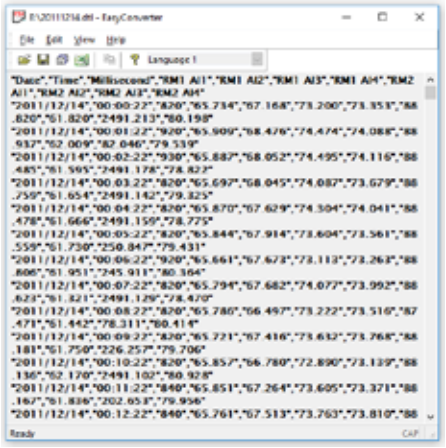

EasyConverter converts log files saved by the Silver Series EM OIT to file formats used by popular Windows® software such as Microsoft® Excel®.

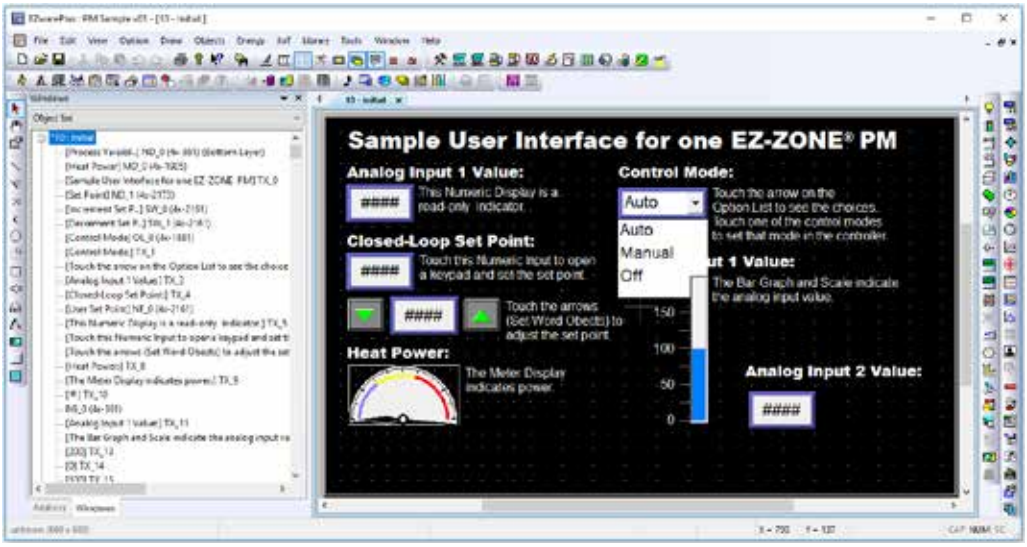

EZwarePlus provides a graphical screen designing environment with point-and-click access to features and drag-and-drop ease.

Compatibility

EZwarePlus software can be used to configure Silver Series EM operator interface terminals as interfaces for Watlow EZ-ZONE controllers and other automation devices.

Note: EZware-5000 is still available for programming older Silver Series OITs.

System Requirements

Operating System

- Windows® 10, 8.1 or 7

WATCONNECT®

Watlow offers WATCONNECT® standard control panels that are quickly configured to your specific application requirements and delivered within two weeks. WATCONNECT panels integrate Watlow's high-quality heater, sensor, temperature controller and power controller products for a complete thermal solution. Normally, competitive custom panels require significantly longer lead times. The broad range of standard features allow customers to quickly configure panels that usually would be considered custom for delivery within two weeks.

Watlow's customers will be impressed with the speed and ease of specifying, selecting, pricing, ordering and delivery. WATCONNECT panels are flexible and scalable; there are thousands of configurable, pre-engineered panel solutions available.

Features and Benefits

Full documentation provided for all WATCONNECT control panels at the time of quotation
- Eliminates lengthy approval process and phone calls

Watlow's F4T® process controllers provide data logging and Ethernet
- Provides real time and historical data management of process parameters

Range of standard input/output (I/O) options
- Provide the user with a higher level of monitoring and control, assuring an efficient and safe operation (See *Communications Interface Chart* in this section)

WATCONNECT enclosure easily mounts to wall or frame
- Decreases installation time

Bottom, right and top power entries
- Provides multiple options for accessing and making connections to the inside of the panel

IP-20 finger-safe construction
- Decreases chance of electrical shock for service and maintenance personnel

Fast acting fuses
- Protects sensitive solid state components from damaging currents

Available illuminated E-Stop
- Allows quick emergency shut down

Variety of cooling options
- Suited for a wide range of environmental conditions

Carbon steel and stainless steel enclosure materials available
- Offers materials that are most economical for the user's application



Supports a wide variety of sensor inputs including ASTM thermocouple types J, K and T, 3 wire 100 ohm RTD and 4 to 20mA process input
- Provides the customer a variety of process signals to ensure compatibiity with field equipment

WATCONNECT Standard Control Panels Include:

- UL®/cUL® listed control panels for installation in indoor/outdoor (shaded) and non-hazardous/hazardous locations
- Wall or frame mount enclosures with hinged door, sized to accommodate one to four branch circuits and top, side or bottom power entry
- Limited access and increased safety through the use of tool operated, ¼ turn, mechanical latches that secure the hinged door to the enclosure
- Molded case circuit breaker disconnect with through-door interlocked handle and lock out/tag out functionality (provides enhanced safety)
- Fused branch circuit protection ensures protection of system load and panel components
- DIN-A-MITE® C series solid state SCR power switching controller(s) with zero cross output firing and touch-safe terminals provide outstanding reliability
- Through wall heat sink(s) reduces ambient temperatures within the enclosure
- Independent high temperature limit control(s) ensures safety and protection of the equipment being controlled
- Safety mechanical contactor(s) removes power to system load
  in the event of a high limit and/or safety situation
- Process controllers come pre-programmed for the configured options and operation, reducing overall set-up time

WATCONNECT

WATCONNECT Standard Control Panels Include (cont.):

- Operator interface features:
  - Illuminated control power on/off switch (one per panel) for increased visibility of control status (status determination at a glance)
  - Illuminated heater on/off switch(s) (one for each control loop) for increased visibility of heater power status (status determination at a glance)
  - Illuminated heater high temperature light with momentary push to reset (allows reset of all limit controls without the necessity of opening the enclosure door)
  - Watlow process temperature control coupled with the DIN-A-MITE power switching controller provide superior thermal performance through tight process temperature control
- Z-type purge system with environmental window and temperature regulation on hazardous location panels
- Remote inputs/outputs based on process controller selection
- Field upgradable (most options)

Agency Approvals

- Preconfigured and certified to UL® Standard 508A for non-hazardous locations
- Non-hazardous panels certified to one or more of the following:
  - Type 4, 4X and 1
- Hazardous location panels certified for UL® Listed installation, investigated to NFPA 496: 2008 and UL® 698A and cUL® Listed, investigated to NFPA 496: 2008 and CAN/CSA 22.2

Cooling/Ambient Requirements Charts

SERIES C2 (Small Non-Hazardous)						
Panel Configuration			Ambient Temperatures		Cooling Requirements	
Total Number of Branch Circuits	FLA/Branch Circuit (Total Load)*	Enclosure Material	Min. Ambient Operating Temp.	Max. Ambient Operating Temp.	Cooling Needs	Restrictions
1	24A (load <= 24A)	Carbon steel	-18°C	40°C	None	None
1	24A (load <= 24A)	SS	-18°C	35°C	None	No F4T
1	48A (load <= 48A)	Carbon steel	-18°C	30°C	None	No F4T
1	48A (load <= 48A)	Carbon steel or SS	-10°C	40°C	Fans/shrouds	None
2	24A (load <= 48A)	Carbon steel or SS	-10°C	40°C	Fans/shrouds	None
2	48A (load <= 96A)	Carbon steel or SS	-10°C	40°C	Fans/shrouds	None

*FLA = Full Load Amps/Branch Circuit, Total Load = (# Branch Circuits) x (Full Load Amps/Branch Circuit)

SERIES C4 (Medium Non-Hazardous)						
Panel Configuration			Ambient Temperatures		Cooling Requirements	
Total Number of Branch Circuits	FLA/Branch Circuit (Total Load)*	Enclosure Material	Min. Ambient Operating Temp.	Max. Ambient Operating Temp.	Cooling Needs	Restrictions
1	24A (load <= 24A)	SS	-18°C	35°C	None	No F4T
1	24A (load <= 24A)	SS	-10°C	40°C	Fans/shrouds	No F4T
1	24A (load <= 24A)	Carbon steel	-18°C	40°C	None	None
1	48A (load <= 48A)	Carbon steel	-18°C	30°C	None	No F4T
1	48A (load <= 48A)	Carbon steel or SS	-10°C	40°C	Fans/shrouds	None
2	24A (load <= 48A)	Carbon steel	-18°C	30°C	None	No F4T
2	24A (load <= 48A)	Carbon steel or SS	-10°C	40°C	Fans/shrouds	None
2	48A (load <= 96A)	Carbon steel or SS	-10°C	40°C	Fans/shrouds	None
3	24A (load <= 72A)	Carbon steel or SS	-10°C	40°C	Fans/shrouds	None
3	48A (load <= 144A)	Carbon steel or SS	-10°C	40°C	Fans/shrouds	None
4	24A (load <= 96A)	Carbon steel or SS	-10°C	40°C	Fans/shrouds	None
4	48A (load <= 192A)	Carbon steel or SS	-10°C	35°C	Fans/shrouds	None
4	48A (load <= 192A)	Carbon steel or SS	-10°C	40°C	Fans/shrouds	No F4T
4	48A (load <= 168A)	Carbon steel or SS	-10°C	40°C	Fans/shrouds	None

*FLA = Full Load Amps/Branch Circuit, Total Load = (# Branch Circuits) x (Full Load Amps/Branch Circuit)

SERIES C3 and C5 (Hazardous Area) Panels		
Air Required	SERIES C3 (Small)	SERIES C5 (Medium)
PSIG	80-120*	100-120*
SCFM	25-30	40-80

*Available air flow and pressure to the panel must be sufficient to maintain stated SCFM.

SERIES C3 and C5 (Hazardous) Panels
Ambient Temperatures
-18°C to 40°C

WATCONNECT

Configuration Options

Control Panel Size	SERIES	Hazardous Location	Total # of Control Loops or Zones	Total # of Branch Circuits in Panel	Voltage Supply	Total # (Type) of Process Controllers	Total Process + Limit Controllers	Notes and Restrictions
Small	C2	Non-Hazardous	1	1	240V, 480V or 600V 3-phase, 50/60Hz 4 wire (3 power, 1 ground)	Up to 2 (EZ-ZONE® PM6 or PM4, F4T)	Up to 4 (1 process w/up to 3 limits) or (2 process w/1 limit each)	1. Shorted SCR not available 2. See process controller and communications interface charts for available features
			1	2				
			2	2				
	C3	Hazardous Class 1, Div. 2, Groups B/C/D or Class 1, Zone 2, Groups IIA/IIB/IIC	1	1	240V, 480V or 600V 3-phase, 50/60Hz 4 wire (3 power, 1 ground) (external 120V single phase necessary for purge operation)	Up to 2 (EZ-ZONE PM6 or PM4, F4T)	Up to 4 (1 process w/up to 3 limits) or (2 process w/1 limit each)	1. Shorted SCR not available 2. See process controller and communications interface charts for available features
			1	2				
			2	2				
Medium	C4	Non-Hazardous	1	1	240V, 480V or 600V 3-phase, 50/60Hz 4 wire (3 power, 1 ground)	Up to 2 (EZ-ZONE PM4, F4T)	Up to 8 (up to 2 process + up to 3 limits for each control loop/zone	See process controller and communications interface charts for available features
			1	2				
			1	3				
			1	4				
			2	2				
			2	4				
	C5	Hazardous Class 1, Div. 2, Groups B/C/D or Class 1, Zone 2, Groups IIA/IIB/IIC	1	1	240V, 480V or 600V 3-phase, 50/60Hz 4 wire (3 power, 1 ground) (external 120V single phase necessary for purge operation)	Up to 2 (EZ-ZONE PM4, F4T)	Up to 8 (up to 2 process + up to 3 limits for each control loop/zone	See process controller and communications interface charts for available features
			1	2				
			1	3				
			1	4				
			2	2				
			2	4				

WATCONNECT

Process Controller Chart

Available Options/Features	Available Process Controllers					Notes/Restrictions
	Small (C2 or C3 SERIES)			Medium (C4 or C5 SERIES)		
	EZ-ZONE PM6	EZ-ZONE PM4	F4T	EZ-ZONE PM4	F4T	
Integrated Limit	X	X	X	X	X	
Single Sensor or Outlet Control	X	X	X	X	X	
Cascade Process Control			X		X	Integrated limit not available with cascade or differential process control options
Differential Process Control			X		X	Integrated limit not available with cascade or differential process control options
Shorted SCR Detection					X	
Remote I/O (See Communications Interface Chart)		X	X	X	X	On EZ-ZONE PM4 - Remote set point feature (within Remote I/O) not available with integrated limit
Local Ethernet Connectivity			X		X	RJ45 Ethernet jack on door standard on all F4Ts
Remote Copper Ethernet Connectivity			X		X	Via optional Ethernet switch mounted within enclosure
Remote Copper/Fiber Ethernet Connectivity			X		X	Via optional Ethernet switch mounted within enclosure
	Total Number of Controllers Needed = Total Number of Control Loops or Zones					

Communications Interface Chart - Standard Features by Controller Type Chart

Function	Per Control Loop/ Zone or System	EZ-ZONE PM6 Process Controller	EZ-ZONE PM4 Process Controller	F4T Process Controller
Remote I/O: Dig In - Remote Shutdown	Per loop/zone		Std.	Std.
Remote I/O: Dig Out - Heater Hi Limit Status	Per loop/zone		Std.	Std.
Remote I/O: Dig Out - Heater Enabled Status	Per loop/zone		Std.	Std.
Remote I/O: Analog Out - Process Temp Retransmit	Per loop/zone		Std.	Std.
Remote I/O: Analog In - Remote Set Point	Per loop/zone		Std.*	Std.
Remote I/O: Dig Out - Common Alarm	System		Std.	Std.
Remote I/O: Dig Out - Purge Loss	System		Std.	Std.
Front RJ45 Ethernet Jack	System			Std.
Data Logging	System (per controller)			Std.
Standard Copper Remote Ethernet Connection	System			Available option
Fiber Remote Ethernet Connection	System			Available option
* Note: Remote SP not available with integrated limit.				

WATCONNECT

Dimensional Drawings

C2 SERIES, Small, Non-Hazardous Location

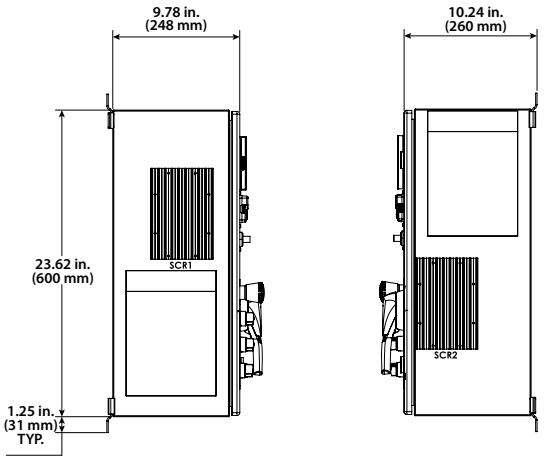

Left Side View | Right Side View

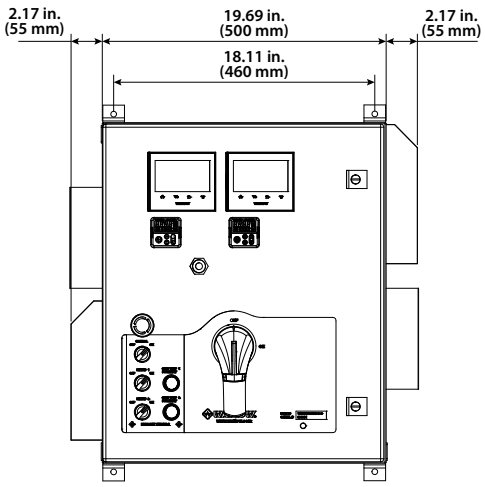

Front View

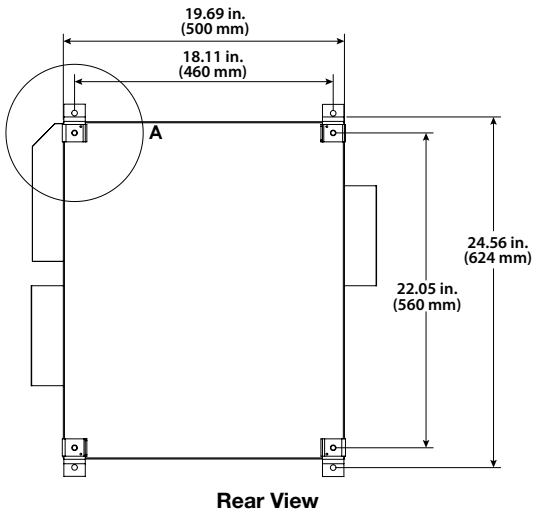

Rear View

C3 SERIES, Small, Hazardous Location

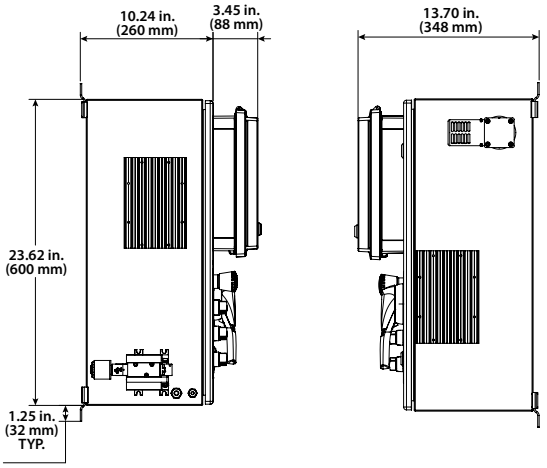

Left Side View | Right Side View

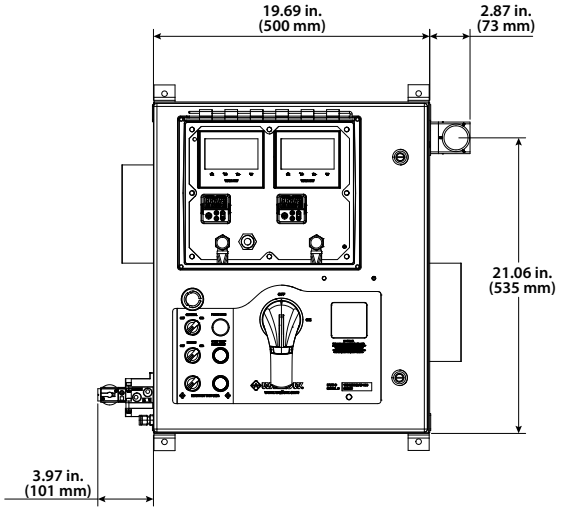

Front View

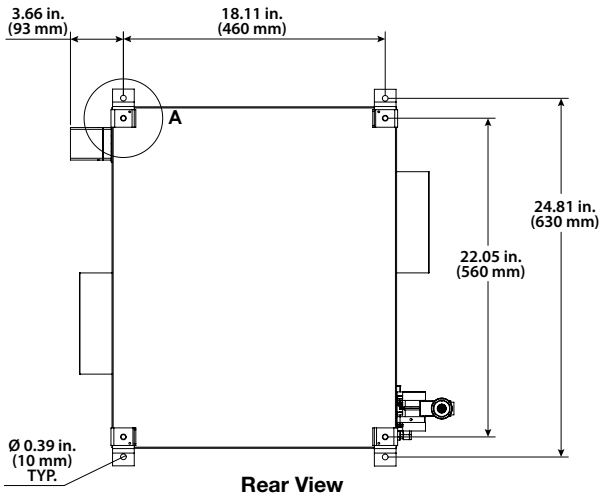

Rear View

WATCONNECT

Dimensional Drawings

C4 SERIES, Medium, Non-Hazardous Location

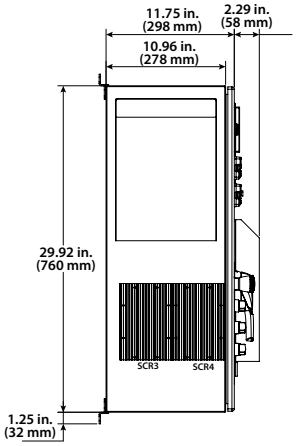

Left Side View

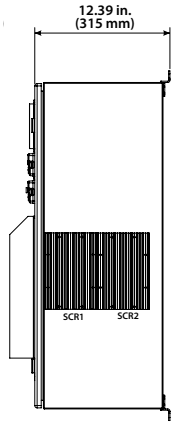

Right Side View

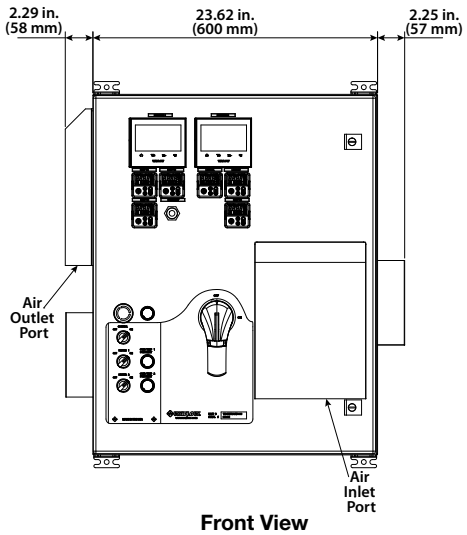

Front View

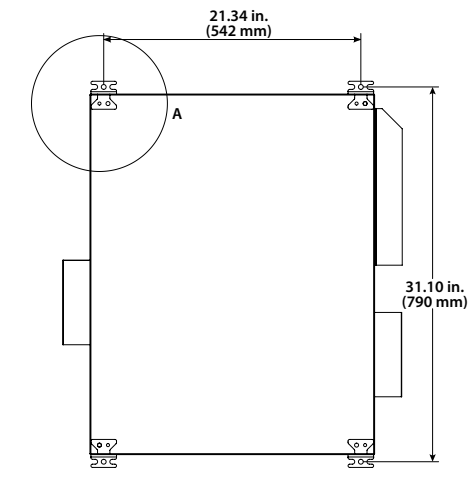

Rear View

C5 SERIES, Medium, Hazardous Location

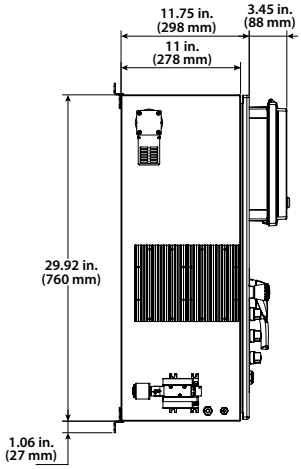

Left Side View

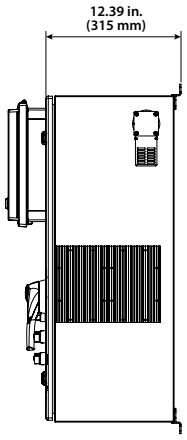

Right Side View

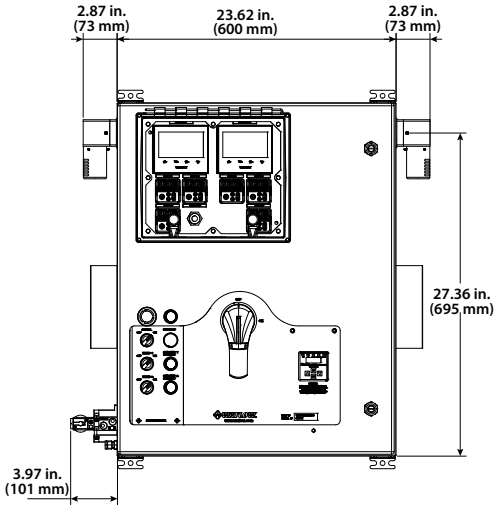

Front View

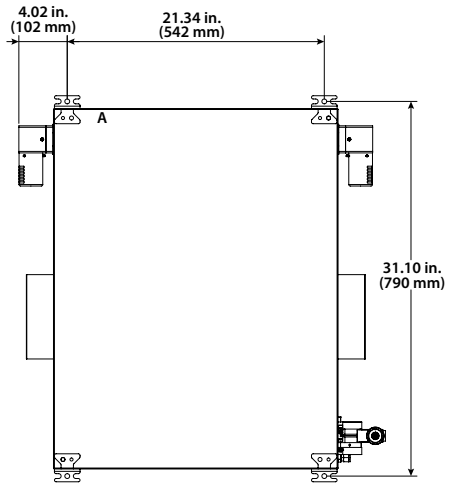

Rear View

WATCONNECT® C1

Watlow's WATCONNECT® SERIES C1 is a new extension to the WATCONNECT standard control panel family. It is a simple to order, simple to setup, single-phase standard control panel that is quickly configured for one or two loops and delivered within two weeks. WATCONNECT control panels integrate Watlow's high-quality temperature controller and power controller products for a complete thermal solution.

Watlow customers will be impressed with the speed and ease of specifying, selecting, pricing, ordering and delivery. WATCONNECT standard control panels are flexible and scalable pre-engineered solutions intended to be used with resistive thermal loads.



Features and Benefits

Full documentation provided for all WATCONNECT control panels at the time of quotation

- Eliminates lengthy approval process and phone calls

WATCONNECT enclosure easily mounts to wall or frame

- Decreases installation time

Terminal block located inside the panel

- Provides easy access for input entries

Bottom power entries

- Allows for easy connections inside the panel

IP-20 finger-safe construction

- Decreases chance of electrical shock for service and maintenance personnel

Fast acting fuses

- Protects sensitive solid state components from damaging currents

Carbon steel and fiberglass reinforced polyester enclosure materials available

- Offers economical solution for the user's application

Supports a wide variety of sensor inputs including ASTM thermocouple types J, K and T, 3 wire 100 ohm RTD and 4 to 20mA process input

- Provides the customer a variety of process signals to ensure compatibility with field equipment

Watlow process temperature controller coupled with the DIN-A-MITE® power switching device provides superior thermal performance through tight process temperature control

- Delivers full system solution for a variety of applications

WATCONNECT C1

WATCONNECT C1 SERIES Standard Control Panels Include:

- UL®/cUL® listed control panels for installation in indoor and non-hazardous locations
- Configurable for 1 or 2 thermal loops, 18 full load amps per loop
- 120/240V, single phase power
- FRP enclosure (single loop 4X option)
- Carbon steel (single or 2 loop Type 4)
- Wall or frame mount enclosures with hinged door, sized to accommodate bottom power entry
- Limited access and increased safety through the use of mechanical latches that secure the hinged door to the enclosure
- Fused branch circuit protection ensures protection of system load and panel components
- EZ-ZONE® PM6 process control with integrated high limit reduces complexity
- DIN-A-MITE family of solid state SCR power switching devices with zero cross output firing and touch-safe terminals provide outstanding reliability
- Safety mechanical contactor(s) removes power to system load in the event of a high limit and/or safety situation
- Process controllers come pre-programmed for the configured options and operation, reducing overall set-up time
- Operator interface features:
  - Illuminated control power on/off switch (one per panel) for increased visibility of control status (status determination at a glance)
  - Illuminated heater enables (one for each control loop) increased visibility of heater power status (status determination at a glance)
  - Illuminated heater high temperature light
  - Main power disconnect (optional)
- Weight chart

Weight Per Panel	
FRP single loop	24 lbs
Carbon steel single loop	38 lbs
Carbon steel two loop	42 lbs

Environment (Indoor applications only)

- Operating temperature: 0 to 104°F (-18 to 40°C)
- Storage temperature: -40 to 185°F (-40 to 85°C)
- Relative humidity: 0 to 90%, non-condensing

Agency Approvals

- Preconfigured and certified to UL®/cUL® certified/listed for non-hazardous locations
- Non-hazardous panels certified to one or more of the following:
  - Type 4, 4X and 1 (indoor use)

WATCONNECT C1

Dimensional Drawings

Single-Loop, FRP Enclosure (4X Option)

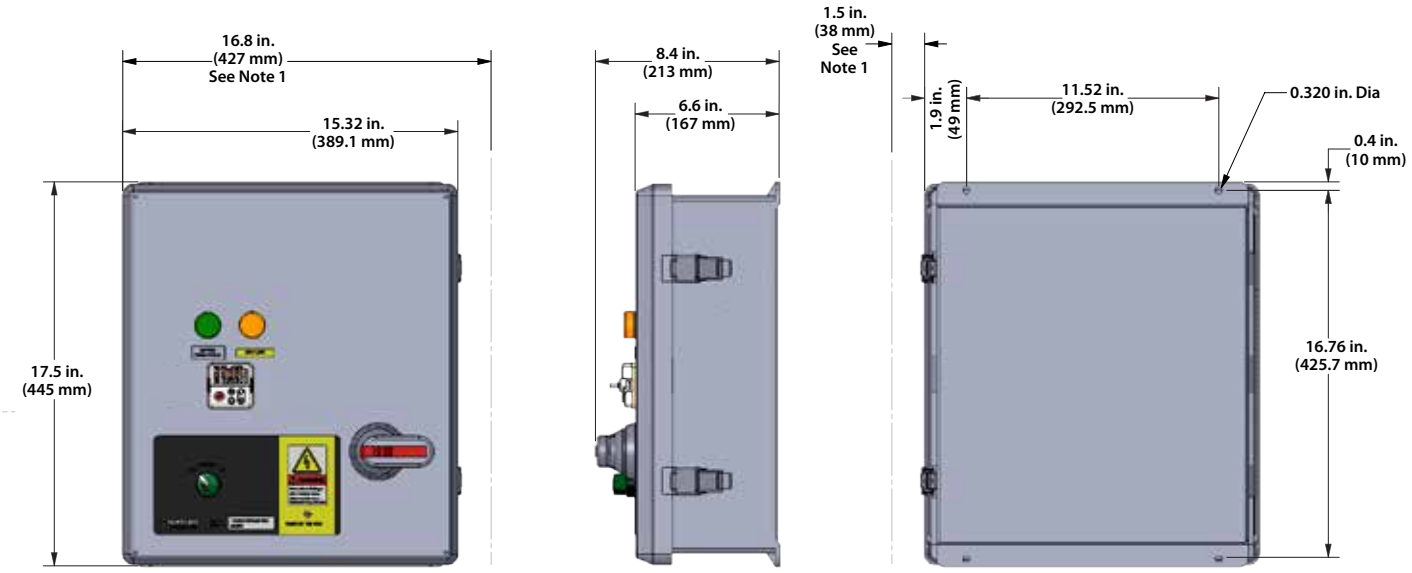

Note 1. Allowance for locking latch travel.

Note: Shown with optional main disconnect.

Single and Two-Loop Carbon Steel Enclosure (Two Loop Shown)

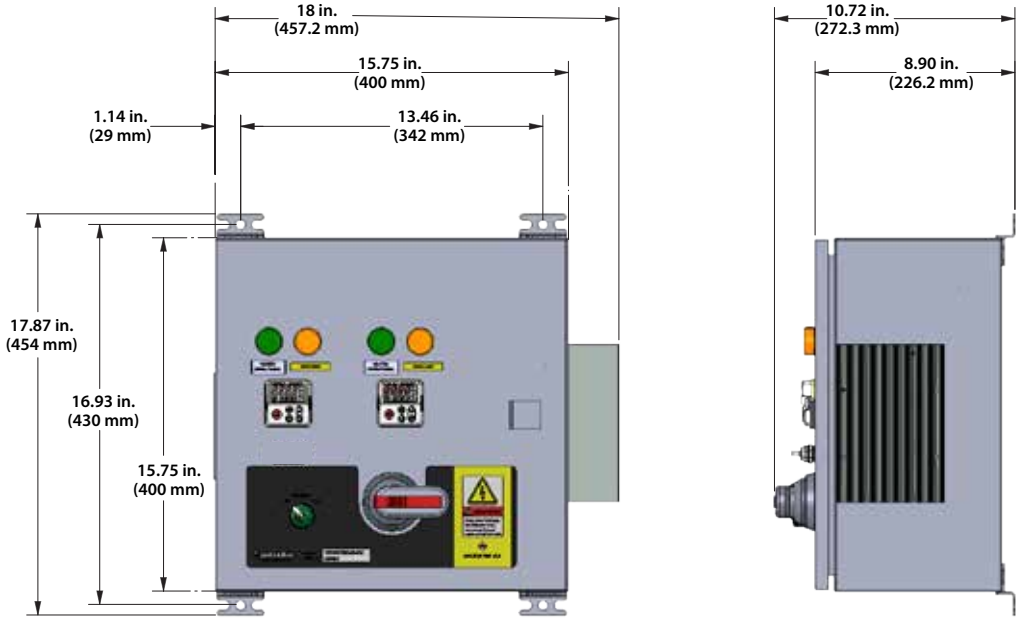

Note: Shown with optional main disconnect.

WATCONNECT C1

Ordering Information

WATCONNECT C1 Extra Small—Non-Hazardous Location (Indoor Only)

SERIES C1
Extra small, non-hazardous control panel

Standard Features					
SCCR	Process Controller Type	Control Mode	Hi Limit(s) per Loop/Zone	Operators	Communications
5kAIC	EZ-ZONE PM6	PID	1	Std	Remote shutdown input + Std bus connection (to TBs)

Configurations						Standard Options			
	Total # of Control Loops or Zones	Total # of Branch Circuits in Panel	Full Load Amps/ Branch Circuit	# Phases Switched	Branch Load Connection(s)	Enclosure	Hi-Limit Type	Main Disconnect	Certification
Base 1	1	1	18	1	Power distribution block (7 connections/ branch)	Carbon steel (Type 4/Type 1)	Integrated (with process controller)	None (on/off switch)	UL®/cUL® listed for non-hazardous environment
Base 2	1	2	18 (36 total amps)	1	Power distribution block (7 connections/ branch)	Carbon steel (Type 4/Type 1)	Integrated (with process controller)	None (on/off switch)	UL®/cUL® listed for non-hazardous environment
Base 3	2	2	18 (36 total amps)	1	Power distribution block (7 connections/ branch)	Carbon steel (Type 4/Type 1)	Integrated (with process controller)	None (on/off switch)	UL®/cUL® listed for non-hazardous environment

Voltage (must select one)
120V single phase (power + neutral + ground)
240V single phase (power + power + ground)

Process Sensor (must select one)
K
RTD
J
T
4-20mA

Limit Sensor (must select one)
K
RTD
J
T
4-20mA

Enclosure Option
FRP Type 4X (one branch circuit only)

Hi-Limit Option
Discrete (separate controller)

Disconnect Option
Main power disconnect switch with lock out/tag out handle (not fuse protected)

Certification Option
Future option

Communications Accessory Option
USB to Std Bus cord/convertor (cord in box)

Communication Adapters

Laptop and personal computers generally include Universal Serial Bus (USB) ports that allow them to communicate with other devices such as printers and digital cameras and Ethernet ports that are typically connected to office networks. Industrial devices such as process and temperature controllers may have Ethernet interfaces or EIA-485 communication interfaces (also known as RS-485). Watlow® offers adapters that provide simple and reliable solutions to connecting these devices to computers.

These compact serial converters offer several features that make them ideal for use in applications in which Watlow controllers communicate with a computer via Modbus® or standard bus.

Features and Benefits

Adds communication ports to computer

- Supports using computer software with industrial products
- Eliminates the need to add a communication card to the computer

USB connection to computer (0847-0326-0000)

- Adds a communications port to a computer with USB
- Automatically configures on Windows® 10, 8, 8.1 and 7
- Eliminates need for external power supply
- Includes cable

Screw terminals

- Connects to standard 485 network wiring with no need for additional components

USB to Ethernet (0847-0400-0000)

- Provides additional local Ethernet network for communicating with controllers
- Eliminates need to connect controller to the office network or disconnect PC from the office network



0847-0326-0000
USB to 485,
Screw Terminals



0847-0400-0000
USB to Ethernet, RJ45

Communication Adapters

Specifications

Specification	0847-0326-0000	0847-0400-0000
Connection to computer	USB type A	USB type A
Computer interface	USB 1.0, 1.1 and 2.0	USB 1.0, 1.1 and 2.0
Connection to serial network	Removable terminal block	RJ-45 female
Serial network	Half duplex 485 (2-wire)	IEEE 802.3, 802.3u and 802.3ab (10BASE-T, 100BASE-TX and 1000BASE-T) compatible
Communication speed	300 to 921K baud	10/100/1000 Mbps (USB 3.0)
Echo jumper	No	Crossover detection and auto-correction (Auto MDIX)
Optical isolation: data-to-ground and computer-to-network	None	None
Port powered	Yes	Yes
Cable length	39 in. (1 m)	5.2 in. (132 mm)
Agency	CE, RoHS	CE, RoHS
Supported operating systems	Windows® 10, 8, 8.1 and 7	Windows® 10, 8, 8.1 and 7
Dimensions	2.53 x 1.25 x 0.64 in. (64 x 32 x 16 mm)	2.6 x 1.0 x 0.6 in. (67 x 26 x 15 mm)
Recommended applications	Computer with a USB port, communicating via Modbus® RTU or EZ-ZONE® standard bus	Computer with a USB port, communicating via Modbus® TCP or standard bus over Ethernet (F4T®)

Converters	Description
0847-0326-0000	USB to 485, screw terminals
0847-0400-0000	USB to Ethernet, RJ45 female

Combined Branch Protection and Semiconductor Fusing

To meet national and local electrical code requirements for branch circuit protection and to protect solid state power controllers, such as Watlow's DIN-A-MITE®, a DFJ fuse is recommended. Watlow offers fast-acting DFJ fuses and holders in amperage ratings covering the range of load currents appropriate for use with the entire DIN-A-MITE power controller and EZ-ZONE® ST integrated controller families.

DFJ fuses protect personnel from injury, protect equipment from damage and are required to minimize damage in the event of a short circuit and achieve short circuit current ratings for Watlow DIN-A-MITE power controllers and EZ-ZONE ST controllers.



Features and Benefits

Combination semiconductor and branch circuit protection

- Fulfills electrical code requirements for branch circuit protection
- Provides protection required for short circuit rating (SCCR) of Watlow products up to 200kA
- Protects valuable semiconductor-based power controllers from damage in the event of a shorted heater
- Simplifies cabinet design
- Reduces wiring time
- Reduces the number of components and cost

DIN-rail mount

- Ensures easy installation

Lockout/tagout

- Protects service personnel

Open fuse indicator

- Provides quick troubleshooting of blown fuses

Combined Branch Protection and Semiconductor Fusing

Fuse Selection Guide

Use a DFJ fuse to protect both a branch circuit or power cable and the solid state power controller on the circuit with a single fuse.

1. Select a fuse with an amperage rating at least 125 percent of the connected load (or the next standard size above.)
2. Select a fuse with an I^2t rating not greater than the I^2t rating of the solid state power controller. See the specification sheet for the power controller to be protected for I^2t specification. See DFJ fuse I^2t below.
3. Use a Watlow recommended fuse. SCCR ratings for Watlow power controllers are only valid with Watlow recommended fuses and only up to 480VAC. For applications above 480VAC or products other than DIN-A-MITE or EZ-ZONE ST contact your Watlow representative.

Fuse Amp Rating	I^2T up to 480V (A^2 Sec)	Watlow Part Number	Bussman® Equivalent Fuse Part Number	Watlow Single Fuse Holder Part Number	Bussman® Holder Equivalent Part Number	Holder Dimensions (in.)			
						A	B	C	D
20	151	**0808-0325-0020**	DFJ-20	**0808-0326-1530**	CH30J1I	1.28	4.59	2.80	2.30
30	414	**0808-0325-0030**	DFJ-30	**0808-0326-1530**	CH30J1I	1.28	4.59	2.80	2.30
40	1080	**0808-0325-0040**	DFJ-40	**0808-0326-3560**	CH60J1I	1.58	4.88	2.80	2.50
50	2268	**0808-0325-0050**	DFJ-50	**0808-0326-3560**	CH60J1I	1.58	4.88	2.80	2.50
60	2909	**0808-0325-0060**	DFJ-60	**0808-0326-3560**	CH60J1I	1.58	4.88	2.80	2.50
80	3521	**0808-0325-0080**	DFJ-80	**0808-0326-7010**	JM60100-1CR	2.1	5.4	3.0	N/A
100	7920	**0808-0325-0100**	DFJ-100	**0808-0326-7010**	JM60100-1CR	2.1	5.4	3.0	N/A

Dimensional Drawings

15 to 30 and 35 to 60 Amp Fuse Holders

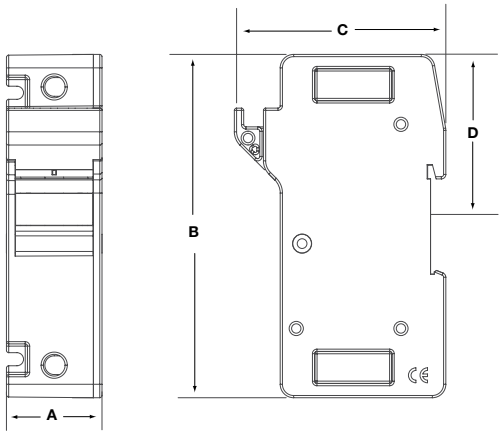

Mounts on 35 mm DIN-rail (DIN EN 50022 35 x 7.5 mm)

80 to 100 Amp Fuse Holder Panel Mount Only

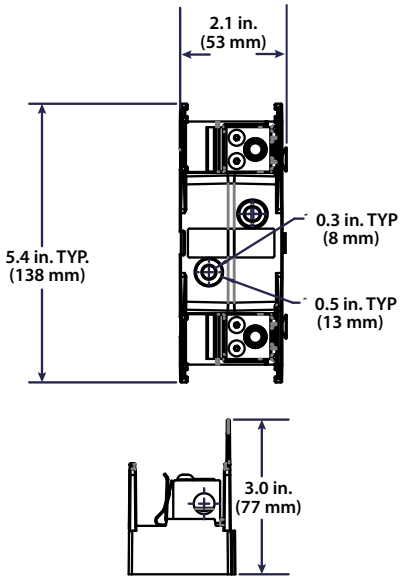

Mounting holes: 0.3 in. (8 mm) dia hole with 0.5 in. (13 mm) dia. countersink.

Semiconductor Fuses

For protection of solid state power controllers, such as Watlow's DIN-A-MITE®, a semiconductor fuse is recommended to protect the power controller and ensure long life. To safeguard power controllers, Watlow® offers DIN-rail mount fuse holders and semiconductor fuses in various sizes to accommodate the entire DIN-A-MITE SCR power controller family and solid state relay products. These fuse holders feature lockout/tagout and open fuse indication.



Fuse						Fuse Holder	
Amp Rating	I²T (A²Sec)	Part Number	Dim. A mm	Dim. B mm	Weight gm	Part Number	Weight gm
12	120	**17-8012**	10	38.1	9.2	**17-5110**	53.8
20	260	**17-8020**	10	38.1	9.2	**17-5110**	53.8
25	390	**17-8025**	10	38.1	9.2	**17-5110**	53.8
32	150	**17-8030**	14	50.8	21.0	**17-5114**	119.4
40	980	**17-8040**	14	50.8	21.0	**17-5114**	119.4
50	1800	**17-8050**	14	50.8	21.0	**17-5114**	119.4
63	2700	**17-8063**	22	58.0	53.1	**17-5122**	229.4
80	5100	**17-8080**	22	58.0	53.4	**17-5122**	229.4
100	10,000	**17-8100**	22	58.0	53.4	**17-5122**	229.4

Note: All fuses should be rated at 125 percent of connected load or the next standard fuse size above 125 percent. Due to special cases such as cooler ambient or lower amperage loads, the connected load should be the determining factor. The semiconductor fuse I²t rating must not exceed the SCR I²t rating. These fuses are classified as supplemental protection for semiconductor devices. They are not approved for branch circuit protection.

Fuse and Fuse Holders

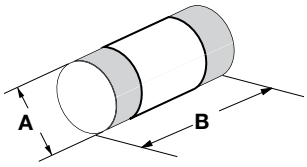

Fuse

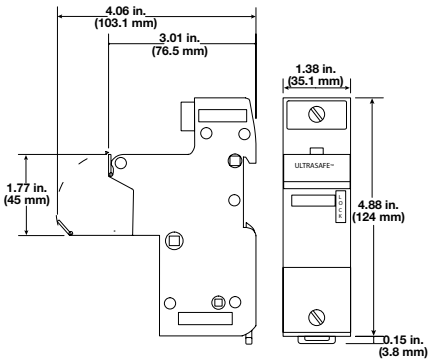

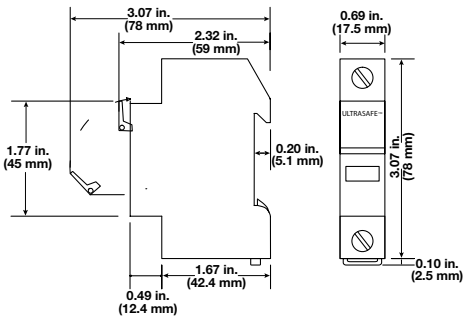

10 mm Holder
17-5110

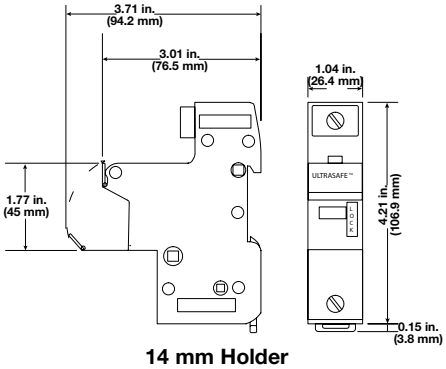

14 mm Holder
17-5114

Current Transformers

A current transformer (CT) provides a signal that is proportional to and isolated from the load that passes through it. The signal from the CT can be measured by a temperature or power controller. The value from that measurement may be used to trigger an alarm, detect an open heater or a shorted SSR, or to indicate the current. Choose the model that provides a measurable output for the planned load current.

To order, simply identify the desired part number. Contact your Watlow® representative for availability.

Part No.	Current Ratio
Current Transformer	
16-0246 ①	50 amp: 50mA
16-0008 ②	75 amp: 5 amp
16-0044	100 amp: 5 amp
16-0072	125 amp: 5 amp
16-0008	150 amp: 5 amp
16-0045	200 amp: 5 amp
16-0073	300 amp: 5 amp
0004-0286-0400	400 amp: 5 amp
0004-0286-0500	500 amp: 5 amp
0004-0286-0600	600 amp: 5 amp
0004-0286-0800	800 amp: 5 amp
0004-0286-1000	1000 amp: 5 amp
Interstage Transformer	
16-0176	5 amp: 20mA

Note: An interstage transformer (part no. 16-0176) is required with any current transformer rated 75 amps or above.

① Supercedes part numbers 16-0230,16-0231, 16-0232, 16-0233.
② Use 2-wire passes through the current transformer 16-0008 for 75 amp applications.

Panel Mount Adapter Plates

Panel mount adapter plates provide a convenient, cost saving solution to modify existing control panels. Available in a variety of DIN sizes, adapter plates make changing out old, larger size temperature controllers with more sophisticated, compact controllers easy. Simply complete the build-a-part with the specifications you require.

Ordering Information

Part Number

① ② ③ ④		⑤	⑥ ⑦ ⑧ Adapter Plate & Config.		⑨ ⑩ ⑪	⑫ Finish
0216	-	0		-	P00	

⑥ ⑦ ⑧	Adapter Plate Size and Configuration
920 =	1/2 DIN to 1/4 DIN
865 =	1/4 DIN to 1/8 DIN
866 =	1/4 DIN to 1/16 DIN
895 =	1/4 DIN to 1/32 DIN
867 =	1/8 DIN to 1/16 DIN
897* =	Vertical 1/8 DIN to horizontal 1/32 DIN
899* =	Horizontal 1/8 DIN to horizontal 1/32 DIN
900 =	1/16 DIN to 1/32 DIN
* Available in black anodized only	

⑫	Finish
2 =	Black anodize
3 =	Stainless steel

Arc Suppression and EMI Filters

Noise Suppression Devices

These devices protect controller outputs from damage that can be caused by voltage spikes from inductive loads.

Part No.	Description
0802-0273-0000	MOV, 150VAC, 20 joule
0802-0266-0000	MOV, 275VAC, 15 joule
0804-0147-0000	Quencharc® (250VAC max.)

CE Filters for DIN-A-MITE Products

These filters are required for DIN-A-MITE® power controllers to conform with CE conducted emissions standards.

Part No.	Description	Stocked
14-0019	Single-phase, parallel connected filter	Yes
14-0020	Three-phase, parallel connected filter	Yes

Power Supplies

Watlow's series of Class 2, low-profile DIN rail-mount power supplies, only 2.2 inches deep, are ideal for shallow enclosure installations commonly used in building automation and security applications.

The DSP series supplies are available with nominal outputs from 20 to 28 volts and power levels ranging from 31 to 91 watts in three package sizes. Load regulation is less than one percent from no load to full load, with ripple and noise below 50 millivolts. To compensate for cable voltage drops, output voltage can be adjusted from the front panel and colored LED indicators immediately confirm the output status.



Features and Benefits

Low 2.2 inch profile
- Fits into wall-mounted cabinets

Wide range AC
- Enables global use with no input selector switches

Convection cooled
- Eliminates the need for a system fan

Class II double insulation
- Offers impeccable protection

DIN-rail or chassis mount
- Adapts easily to different mounting configurations

Adjustable voltage output
- Fine tune output voltage from 24 to 28VDC

Power Supplies

Items/Model Number	DSP30	DSP60	DSP100
Watlow® Part Number	**0847-0299-0000**	**0847-0300-0000**	**0847-0301-0000**
AC Input Voltage Range	90-264VAC, Class II double insulated (no ground connection required)	Same	Same
Input Frequency	47-63Hz	Same	Same
DC Input Voltage Range	120-370VDC	Same	Same
Inrush current (115/230VAC)	25/50A	30/60A	30/60A
Power Factor and Flicker	Meets EN 61000-3-2, EN 61000-3-3	Same	Same
Output Voltage	24V	Same	Same
Voltage Adjust	24-28V	Same	Same
Current	1.30A	2.50A	4.20A
Power	31.2 W	60.0 W	100.8 W
Typical Efficiency	83%	86%	85%
Hold Up Time (115VAC)	25ms	12ms	10ms
UL® 1310 Class 2	Yes	Yes	—
Output Voltage Accuracy	±1% of nominal	Same	Same
Line Regulation	1%	Same	Same
Load Regulation	1%	Same	Same
Ripple and Noise (20MHz BW) mV	50mV	Same	Same
Overcurrent	110-160%, fold	Same	Same
Protection (Type)	Forward under short circuit (DSP100-24/C2 102-108)	Same	Same
Overvoltage Protection (Volts)	120-145%	Same	Same
Hold Up Time (115VAC input)	See model selector	Same	Same
LED Indicators	Green LED = On, Red LED = DC output low	Same	Same
Operating Temperature	-25 to +71°C (derate linearly 2.5%/°C from 55 to 71°C)	Same	Same
Temperature Coefficient	±0.02%/°C	Same	Same
Operating Humidity	20 – 95% RH (non condensing)	Same	Same
Cooling	Convection	Same	Same
Withstand Voltage	Input to output 3kVAC for 1 min.	Same	Same
Isolation Resistance	>100M at 25°C & 70% RH, output to ground 500VDC	Same	Same
Vibration (Operating)	IEC 60068-2-6 (Mounting by rail: random wave, 10-500 Hz, 2G, ea. along X, Y, Z axes 10 min/cycle, 60 min.)	Same	Same
Shock (Operating)	IEC 60068-2-27 (Half sine wave, 4G, 22ms, 3 axes, 6 faces, 3 times for each face	Same	Same
Safety Agency Approvals	UL®1310 Class 2, UL®60950-1, EN 60950-1, CE	Same	Same
Immunity	EN 61000-4-2, -3, -4, -5, -6, -8 and -11	Same	Same
Conducted and Radiated EMI	DSP10: EN 55022 Class B; DSP30-100: EN 55022 Class A	Same	Same
Weight (Typ) g	200	250	320
Size (W x H x D) in.	2.09 x 3.58 x 2.19	2.8 x 3.58 x 2.19	3.54 x 3.58 x 2.19
Case Material	Plastic	Same	Same
Warranty Years	2	Same	Same

Power Supplies

Dimensional Drawings

DSP30

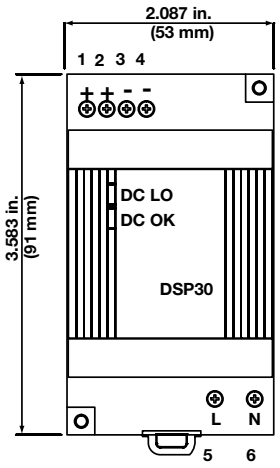

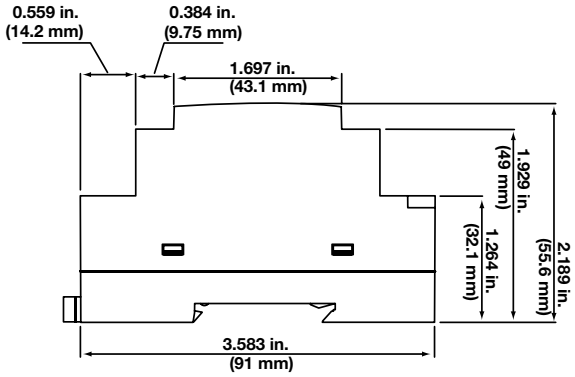

DSP60

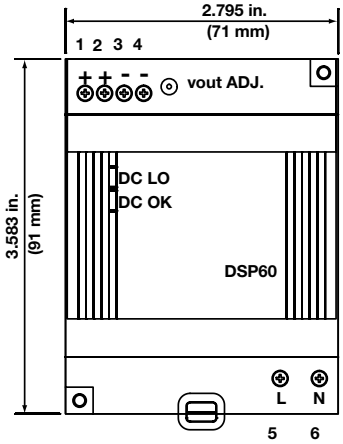

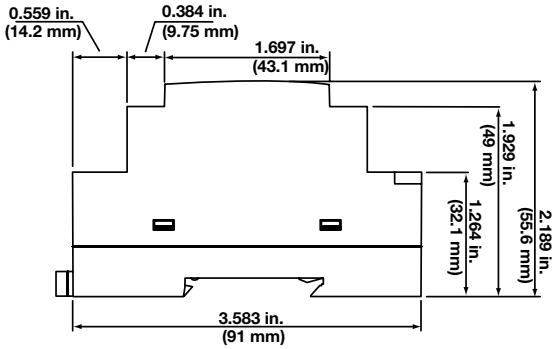

DSP100

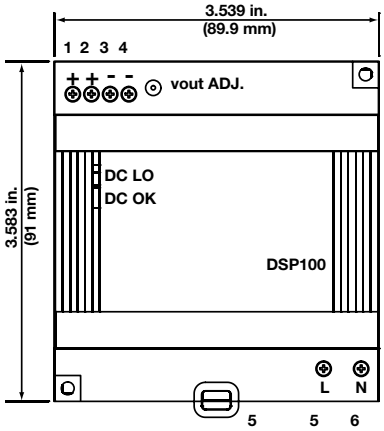

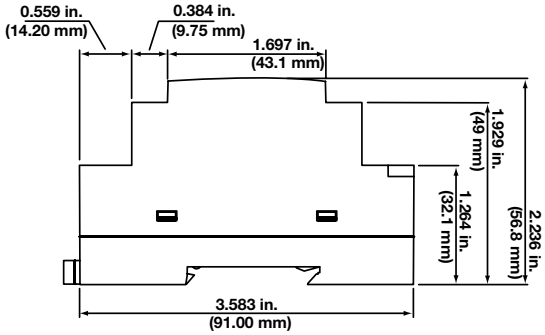

F4T®

The F4T® temperature process controller offers a wide range of field removable I/O modules for maximum design flexibility. Configurations can be custom tailored to meet the scaling needs of a tremendous range of equipment and applications while providing exactly the hardware types required for compatibility. The F4T controller also features a 4.3 inch, color, graphical touch panel. Combining power, flexibility and functionality, this new controller offers unmatched versatility, and its best-in-class ease of use could very well make user manuals a thing of the past.

Watlow's F4T is available through Watlow ***SELECT®***, a program that enables you to quickly identify, configure and receive your thermal products faster and easier than ever before. With ***SELECT***, you use a variety of tools to guide your decision, configure products for an exact fit and quickly receive your order. Visit www.watlow.com/select to learn more

Features and Benefits

4.3-inch, color touch panel with high-resolution, graphical user-interface

- Shortens learning curve and reduces operator errors
- Allows channels, profiles, alarms, inputs and outputs to be personalized with user defined names

Temperature PID, data logger, trend chart, over/under-temperature limit, power switching, math, logic, timers and counters combined into an integrated system

- Lowers ownership costs
- Eliminates the need for separate discrete components
- Reduces complexity
- Simplifies design, ordering and installation
- Saves money

Robust algorithms for temperature, cascade, altitude, humidity and compressor

- Improves process control
- Offers one to four channels of control
- Provides multiple PID sets
- Enables TRU-TUNE®+ adaptive control algorithm
- Offers 40 ramp and soak profiles with real-time clock and battery backup

Email and text alerts

- Notifies users of an event that has occurred such as specific profile or step within a profile, alarm condition, limit condition or analog input error

COMPOSER® graphical configuration PC software

- Speeds up and simplifies commissioning
- Archives and documents controller setup
- Connects with controller easily via Ethernet



Many communications options available including Ethernet/IP™, Modbus® TCP (Ethernet) SCPI and EIA-232/485 Modbus® RTU

- Offers two USB host ports and one device port
- Simplifies file transfers
- Connects easily

Batch Processing with Bar Code Data Entry

- Easily collects and manages data records
- Inputs information from bar code scan for fast and easy data entry
- Offers foolproof processing via smart profile to part linkage
- Provides data security through password and data log encrypted file options
- Improves manufacturing robustness via reminder screens ensuring all data is entered during processing
- Helps ensure compliance with growing regulations and minimizes warranty exposure
- Eliminates part processing skips or walk arounds due to improved quality control
- Produces formatted data record report for easy receipt or record management uses

Modular design

- Adapts quickly to evolving requirements
- Offers numerous types of field pluggable modules for maximum flexibility and easiest compatibility
- Features scalable and modular firmware functions
- Delivers scalable input/output quantities from 1 to 36

SERIES F4S/F4D/F4P backward compatible

- Provides easy retrofit with minimum pain and disruption
- Ensures proper fit in existing SERIES F4 panel cutout

F4T

Key Features and Options

- 1 to 4 control loops with TRU-TUNE+ adaptive control algorithm for superior controllability
- 40 profiles for ramp and soak
- EtherNet/IP™
- Ethernet Over Modbus® TCP connectivity
- Multiple high-speed USB host ports
- Over/under-temperature limits for safety shutdown
- Universal, thermistor and ac current measurement inputs
- Inputs and outputs expandable from 1 to 36
- SENSOR GUARD prevents unplanned process shutdowns and product loss by switching to a backup sensor if the primary sensor fails
- High current outputs for up to 10A heaters or other loads
- Programmable timers, counters, math and logic
- Temperature, cascade, altitude, relative humidity, compressor algorithms and Vaisala® humidity compensation
- Sequencer start-up and control
- Retransmit and remote set point
- USB configuration port
- Configuration settings can be stored and recalled
- Removable modules and connectors
- Front-panel mount and flush mounting options
- Right angle and front-screw terminal options
- UL® listed, CSA, CE, RoHS, W.E.E.E., FM
- Multi-Language options
  - English, German, French, Italian, Spanish, Japanese, Korean and Chinese
- USB wired or wireless mouse user interface
  - Use in hazardous location, dirty environments or applications with gloves

Common Specifications

Line Voltage/Power

- Data retention upon power failure via nonvolatile memory

Functional Operating Range

- Type J: -346 to 2192°F (-210 to 1200°C)
- Type K: -454 to 2500°F (-270 to 1371°C)
- Type T: -454 to 750°F (-270 to 400°C)
- Type E: -454 to 1832°F (-270 to 1000°C)
- Type N: -454 to 2372°F (-270 to 1300°C)
- Type C: 32 to 4200°F (0 to 2315°C)
- Type D: 32 to 4200°F (0 to 2315°C)
- Type F: 32 to 2449°F (0 to 1343°C)
- Type R: -58 to 3214°F (-50 to 1767°C)
- Type S: -58 to 3214°F (-50 to 1767°C)
- Type B: 32 to 3300°F (0 to 1816°C)
- RTD (DIN): -328 to 1472°F (-200 to 800°C)
- Process: -1999 to 9999 units

Calibration Accuracy

- Calibration accuracy and sensor conformity: ±0.1% of span, ±1°C at the calibrated ambient temperature and rated line voltage
  - Types R, S, B: ±0.2%
  - Type T below -50°C: ±0.2%
- Calibration ambient temperature at 77°F ±5°F (25°C ±3°C)
- Accuracy span: 1000°F (540°C) min.
- Temperature stability: Typical ±0.1°F/°F (±0.1°C/°C) rise in ambient max.

Configuration Diagnostics

- Indicates if modules present match the expected configuration settings

USB Host Port

- Total of 2 available
- Version: USB 2.0 hi-speed
- Connector: USB Type A, high-retention
- Flash drive must be FAT32 file system
- Max. current 0.5A/port

System Configuration Requirements

- F4T has 6 slots for flex modules (FM)
- EIA-232/485 Modbus® RTU flex module, if used, must occupy slot 6 location
- A maximum of two 10A SSR FM modules can be used in the F4T and each will require space for 2 slots. Valid in slots 1, 2, 4 or 5

Wiring Termination—Touch-Safe Terminals

- Right-angle and front-screw terminal blocks for input, output and power supply connections
- Input, output and power terminals: Touch safe, removable, 12 to 30 AWG

F4T Base Specifications

Line Voltage/Power

- High voltage option: 100 to 240VAC +10/-15%, 50/60Hz ±5%
- Low voltage option: 24 to 28VAC/VDC+10/-15%, 50/60Hz ±5%
- Power consumption: 23 W, 54VA

User Interface

- 4.3 inch TFT PCAP color graphic touch screen
- LED backlife >50K hours
- 4 keys: Home, Main Menu, Back, Help
- Multiple languages
  - English, German, French, Italian, Spanish, Japanese, Korean and Chinese
- USB wired or wireless mouse functionality
  - Right click for 4 keys: Home, Main Menu, Back, Help

F4T

Environment
- NEMA 4X/IP65 front panel mount configuration only
- Operating temperature: 0 to 122°F (-18 to 50°C)
- Storage temperature: -40 to 185°F (-40 to 85°C)
- Relative humidity: 0 to 90%, non-condensing

Agency Approvals
- UL®/EN 61010 Listed, File E185611 QUYX
- UL® 508 Reviewed
- CSA CC.C#14, File 158031
- FM Class 3545 (configurations with limit modules)
- AMS 2750 E compliant: Analog input process values. Tip: Maximize field calibration accuracy and uniformity by using advanced F4T features such as Calibration Offset and Linearization Function blocks. Refer to user manual for details.
- RoHS by design, China RoHS Level 2, W.E.E.E.
- CE
- Windows® Hardware Certification

Control Loops
- 1 to 4 PID or ON-OFF control loops
- 0 to 6 Limit loops
- User-selectable action: Heat, cool or heat/cool
- Auto-tune with TRU-TUNE+ adaptive control

Control Loops and Over-temperature Limits
- Input sampling: 10Hz
- Output update: 10Hz

Communications
- Modbus® TCP (Ethernet)
- Isolated communications

Profile Ramp and Soak Option
- Profile engine affects 1 to 4 loops in sync
- 40 profiles with 50 steps per profile

Data Logging
- User selectable parameters: Up to a maximum of 128 active parameters depending on configuration
- Logging interval: Programmable increments between 0.1 seconds and 60 minutes if logging to internal memory. Logging directly to USB; 1.0 seconds to 60 minutes
- File types: .CSV for standard data logging or proprietary format for encrypted data log option
- Storage: 80MB internal memory or to USB memory stick
- File transfer: Internal memory to USB host port or to Ethernet Modbus® TCP
- Transfer options: On demand by user or user programmable based on time (hours) or immediately when a new data log file record is available or percent of memory used. Utilizes TFTP and Sambo protocols
- Record: Date and time stamped

Batch Processing with Bar Code Data Entry Via USP Scanner
- Compatible with many bar code types including Code 128, Code 39, Extended Code 39, Data Matrix, Interleaved 2 of 5, ISSN, SISAC, LOGMARS, QR, UCC/EAN-128 (GS1-128, UPC-A & E)
- Compatible with most USB scanner types such as Zebra DS4308, DS2208, LI2208 and LS2208
- USB port provides 500mA max. power supply for bar code scanner/base charging
- Display can show bar code fields up to a maximum length of 48 characters. Characters might wrap to 2 rows after 24 characters
- Part-Profile list entries – approximately 1,000 typical length part numbers of 15 characters each can be stored. Can easily import different part files via USB thumb drive connection to cover a higher quantity range of part lists
- Program the bar code scanner to add an enter key (carriage return feed) at the end of each bar code data field sent to F4T/D4T™. Refer to USB scanner user manual

Trending
- 4 user programmable charts
- 6 pens available per chart
- View analog sensors, process values, set points and power

Real Time Clock with Battery Backup
- Accuracy (typical): +/-3ppm over -15 to 50°C
- Typical battery life: 10 years at 77°F (25°C)
- Field replaceable lithium battery

Number of Function Blocks by Ordering Option

Function Block	Basic	Set 1	Set 2
Alarm	6	8	14
Compare	None	4	16
Counter	None	4	16
Linearization	4	4	8
Logic	None	12	24
Math	None	12	24
Process Value	4	4	8
Special Output Function (including compressor)	None	2	4
Timer	None	6	16
Variable	4	12	24

Compare
- Greater than, less than, equal, not equal, greater than or equal, less than or equal

Counters
- Counts up or down, loads predetermined value on load signal

F4T

Linearization
- Interpolated or stepped

Logic
- And, nand, or, nor, equal, not equal, latch, flip-flop

Math
- Average, process scale, switch over, deviation scale, differential (subtract), ratio (divide), add, multiply, absolute difference, minimum, maximum, square root, sample and hold, pressure-to-altitude and dew point

Process Value
- Sensor backup, average, crossover, wet bulb-dry bulb, switch over, differential (subtract), ratio (divide), add, multiply, absolute difference, minimum, maximum, square root, altitude, Vaisala® relative humidity and pressure-to-altitude

Special Output Function
- Compressor control (cool and/or dehumidify with single compressor), motorized valve, sequencer

Timers
- On pulse, delay, one shot or retentive

Variable
- User value for digital or analog variable

Panel Mount Dimensions

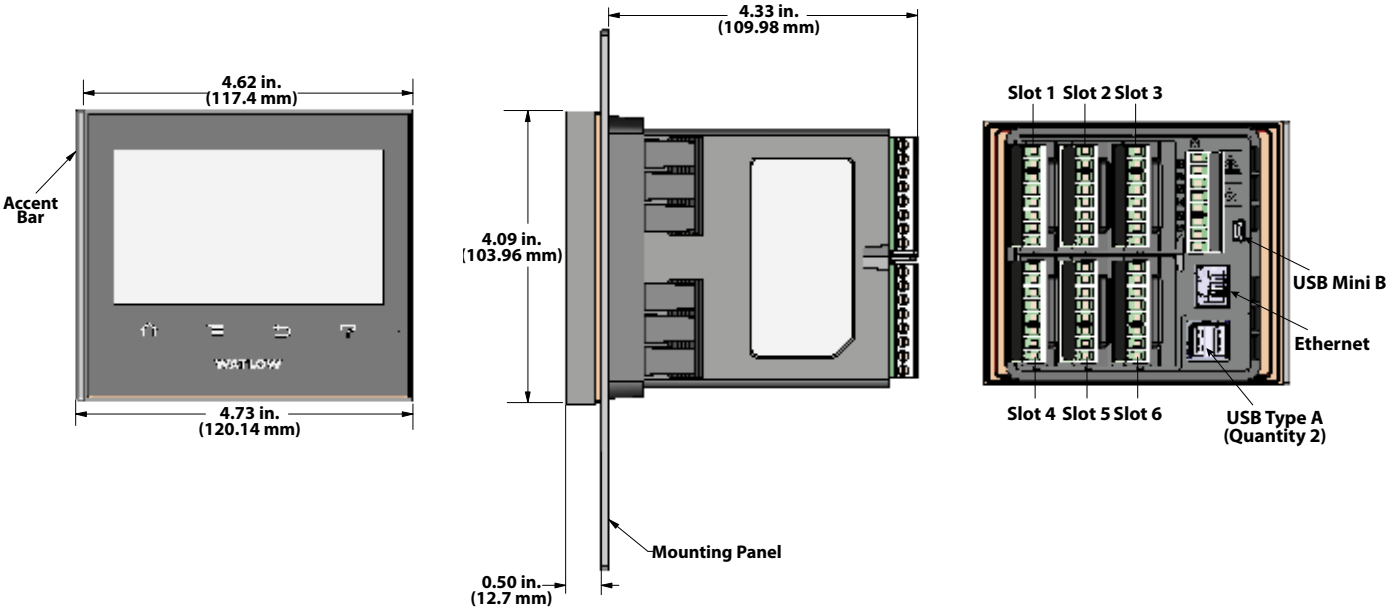

Flush Mount Dimensions

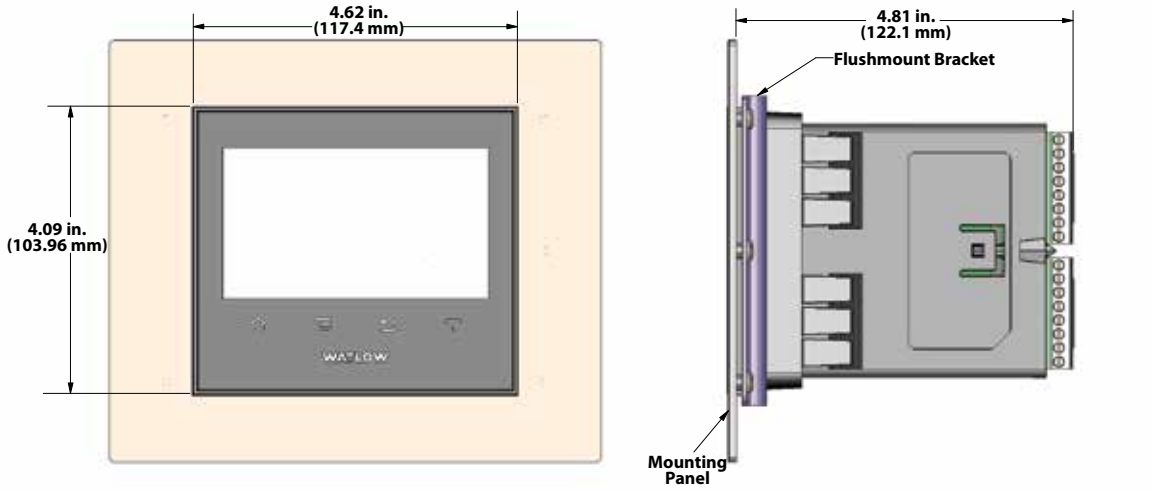

F4T

F4T Base Ordering Information

Base includes: 4.3 inch color graphical touch panel, 2 USB host, USB configuration port, standard bus, Ethernet Modbus® TCP. SCPI protocol and backwards compatible Modbus® for select key SERIES F4D/P/S parameters.

Part Number

①②	③	④	⑤	⑥	⑦	⑧⑨	⑩⑪	⑫
	Base Type	Application Type	Data Logging	Power Supply Connector & Voltage, Logo	Profiles & Function Blocks	Communication Options	Documentation, Accent Bar, Replacement Connector & Custom	Control Algorithms
F4	T							

③	Base Type
T =	Touch screen

④	Application Type
1 =	Standard
X =	Custom options, contact factory

⑤	Data Logging and Graphic Trend Charts
A =	None
B =	Graphical trend chart
J =	Data logging
K =	Data logging with encrypted files
L =	Data logging and graphical trend chart
M =	Data logging with encrypted files, graphical trend charts and batch processing with bar code data entry①

①Must also order digit 7: Profiles option D, E or F for batch processing with bar code data entry feature to be enabled.

⑥	Power Supply	Power Supply Connector	Watlow Logo
1 =	100 to 240VAC	Right angle (standard)	Yes
2 =	100 to 240VAC	Right angle (standard)	No
3 =	100 to 240VAC	Front screw	Yes
4 =	100 to 240VAC	Front screw	No
5 =	24 to 28VAC or VDC	Right angle (standard)	Yes
6 =	24 to 28VAC or VDC	Right angle (standard)	No
7 =	24 to 28VAC or VDC	Front screw	Yes
8 =	24 to 28VAC or VDC	Front screw	No

⑦	Profiles		Function Blocks		
	None	40 Profiles, Battery Backup and Real-Time Clock	Basic Set	Set 1	Set 2
A =	X		X		
B =	X			X	
C =	X				X
D =		X	X		
E =		X		X	
F =		X			X

Note: Refer to page 188 "Number of Function Blocks by Ordering Option" for quantities and types of functions blocks in each set in the F4T specification sheet on the website.

⑧⑨	Communication Options
AA =	Modbus® TCP (Ethernet)
A3 =	EtherNet/IP™ (w/Modbus® TCP)

⑩⑪	Documentation DVD / QSG	Decorated Brushed Aluminum Accent Bar			
		Gray	Blue	Red	None
1A =	Yes	X			
1B =	Yes		X		
1C =	Yes			X	
1D =	Yes				X
1E =	No	X			
1F =	No		X		
1G =	No			X	
1H =	No				X
1J =	Replacement connectors only - for the model number entered				
XX =	Contact factory, other custom-firmware, preset parameters, locked code, logo				

⑫	Control Loop	Cascade Loop
1 =	1	0
2 =	2	0
3 =	3	0
4 =	4	0
5 =	0	0
6 =	0	1
7 =	1	1
8 =	2	1
9 =	3	1
A =	0	2
B =	1	2
C =	2	2

Note: Each control loop algorithm requires 1 universal or thermistor input from a flex module.
Note: Each cascade loop algorithm requires 2 universal or thermistor inputs from flex modules.

⑬⑭⑮	Populated Flex Modules
AAA =	No populated flex modules
XXX =	Contact factory - Populated flex modules

Note: If AAA is selected you will need to order Flex Modules (FM) next to account for input and output hardware.

F4T

Flex Modules—High Density I/O Specifications

Four Universal Inputs (Control Loops, Auxiliary Input)

- Thermocouple: Grounded or ungrounded sensors, greater than 20MΩ input impedance, 2kΩ source resistance max.
- RTD: 2-wire, platinum, 100Ω and 1000Ω at 32°F (0°C) calibration to DIN curve (0.00385Ω/Ω/°C)
- Process: 0-20mA at 100Ω, or 0-10VDC, 0-50mVDC at 20kΩ input impedance; scalable
- Potentiometer: 0 to 1,200Ω
- Inverse scaling

Four Thermistor Inputs (Control Loops, Auxiliary Input)

- 0 to 40kΩ, 0 to 20kΩ, 0 to 10kΩ, 0 to 5kΩ
- 2.252kΩ and 10kΩ base at 77°F (25°C)
- Preprogrammed Steinhart-Hart coefficients for Alpha Techniques (A curve 2.252k and 10k, C curve 10k), BetaTHERM (2.2K3A, 10K3A and 10K4A) and YSI (004, 016 and 006)
- User-settable Steinhart-Hart coefficients for other thermistors

Three Universal Process/Retransmit Outputs

- Output range selectable
- 0 to 10VDC ±15mV into a min. 4,000Ω load with 2.5mV nominal resolution
- 0 to 20mA ±30µA into max. 400Ω load with 5µA nominal resolution
- Temperature stability 100ppm/°C

Three Mechanical Relays

- 2 Form C relays, 1 Form A relay. Form A relay shares common with 1 Form C relay
- Each relay is 5A, 24 to 240VAC or 30VDC max., resistive load, 100,000 cycles at rated load. Requires a min. load of 20mA at 24V, 125VA pilot duty 120/240VAC, 25VA at 24VAC

Four Mechanical Relays

- Form A, 5A ea., 24 to 240VAC or 30VDC max., resistive load, 100,000 cycles at rated load. Requires a min. load of 20mA at 24V, 125VA pilot duty

Two Solid State Relays

- Form A, 10A max. each SSRs combined at 24VAC min., 264VAC max., opto-isolated, without contact suppression, max. resistive load 10A per output at 240VAC, max. 20A per card at 122°F (50°C), max.

Four Solid State Relays

- 2 pairs of SSRs, each pair shares a common
- Form A, 24VAC min., 264VAC max., opto-isolated, without contact suppression, resistive load 2A per output at 240VAC, max. See table for max. current per output

Quad 2A SSR Card Derating Curves

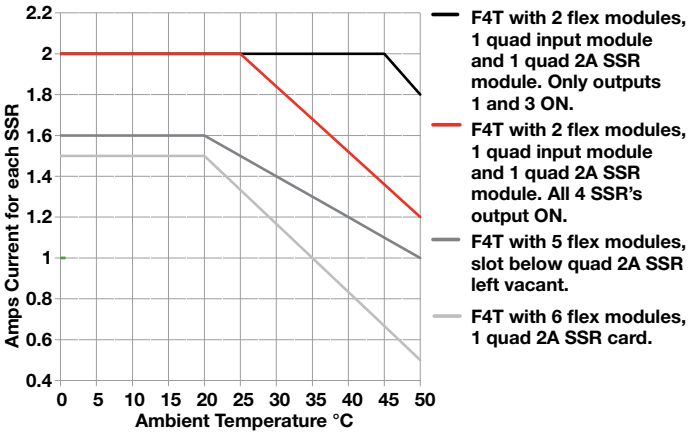

Six Digital I/O

- Each independently configurable as input or output
- Dry contact input: Update rate 10Hz, min. open resistance 10kΩ, max. closed resistance 50Ω, max. short circuit 13mA
- DC voltage input: Update rate 10Hz, max. input 36V at 3mA, min. high state 3V at 0.25mA, max. low state 2V
- Switched dc output: Max. 5VDC at 130mA, or 19-22VDC at 80mA; field selectable
- Open collector output: 32VDC at 1.5A max., 8A max. per 6 outputs combined

F4T

F4T Flex Module—High Density I/O Ordering Information

Part Number

①②	③ Module ID Type	④ Future Option		⑤ Input and Output Hardware	⑥⑦⑧ Future Options		⑨ Future Option	⑩ Custom Options and Connectors	⑪⑫ Custom Options- Firmware, Overlay, Preset Parameters, Locked Code
FM	H	A	-		AAA	-	A		

③	Module ID Type
H =	High Density I/O

④	Future Option
A =	Future Option

⑤	Input and Output Hardware
R =	4 universal inputs (T/C, RTD 2-wire, 0-10VDC, 0-20mA)
P =	4 thermistor inputs
C =	6 digital I/O
F =	3 universal process/retransmit outputs
B =	3 mechanical relay 5A, 2 Form C and 1 Form A (Form A shares a common with one Form C)
J =	4 mechanical relay 5A, Form A
K =	2 SSRs 10A①
L =	4 SSRs at 2A each. SSRs grouped in 2 pairs with each pair sharing a common

① **Notes:** Input and output hardware option K: 2 SSR's 10A.

The 2 SSR's 10A FM module requires 2 F4T slots. Valid slot locations are 1, 2, 4 or 5.

The F4T can support a maximum of 2 total of the K option FM module types (4 total SSR, 10A).

⑥⑦⑧	Future Options
AAA =	Future Options

⑨	Future Option
A =	Future Option

⑩	Custom Options and Connectors
A =	Right angle screw connector (standard)
F =	Front screw connector

⑪⑫	Custom Options - Firmware, Overlay, Preset Parameters, Locked Code
AA =	Standard with quick start guide
AB =	Standard without quick start guide
AC =	Replacement connectors hardware only - for the entered model number
XX =	Custom

F4T

Flex Modules—Mixed and Limit I/O Specifications

Universal Input
- Thermocouple: Grounded or ungrounded sensors, greater than 20MΩ input impedance, 2kΩ source resistance max.
- RTD: 2- or 3-wire, platinum, 100Ω and 1000Ω at 32°F (0°C) calibration to DIN curve (0.00385Ω/Ω/°C)
- Process: 0-20mA at 100Ω, or 0-10VDC, 0-50mVDC at 20kΩ input impedance; scalable
- Potentiometer: 0 to 1,200Ω
- Inverse scaling

Thermistor Input
- 0 to 40kΩ, 0 to 20kΩ, 0 to 10kΩ, 0 to 5kΩ
- 2.252kΩ and 10kΩ base at 77°F (25°C)
- Preprogrammed Steinhart-Hart coefficients for Alpha Techniques (A curve 2.252k and 10k, C curve 10k), BetaTHERM (2.2K3A, 10K3A and 10K4A) and YSI (004, 016 and 006)
- User-settable Steinhart-Hart coefficients for other thermistors

Temperature Input
- Thermocouple: Grounded or ungrounded sensors, greater than 20MΩ input impedance, 2kΩ source resistance max.
- RTD: 2-wire, platinum, 100Ω and 1000Ω at 32°F (0°C) calibration to DIN curve (0.00385Ω/Ω/°C)

Digital Input
- Update rate 10Hz
- DC voltage: Max. input 36V at 3mA, min. high state 3V at 0.25mA, max. low state 2V
- Dry contact input: Min. open resistance 10kΩ, max. closed resistance 50Ω, max. short circuit 13mA

Current Transformer Input
- Accepts 0-50mA signal (user programmable range)
- Displayed operating range and resolution can be scaled and are user programmable
- Current input range: 0 to 50mA ac, 100Ω input impedance
- Response time: 1 second max., accuracy ±1mA typical
- Use with current transformer (Watlow part number: 16-0246)

Switched DC Output
- Max. 32VDC open circuit
- Max. current 30mA per single output
- Max. current 40mA per pair

Open Collector Output
- Max. 30VDC at 100mA

Solid State Relay (SSR) Output
- Form A, 1A at 50°F (10°C) to 0.5A at 149°F (65°C), 0.5A at 24VAC min., 264VAC max., opto-isolated, without contact suppression

Form A Electromechanical Relay Output
- 5A, 24 to 240VAC or 30VDC max., resistive load, 100,000 cycles at rated load, requires a min. load of 20mA at 24V, 125VA pilot duty

Form C Electromechanical Relay Output
- 5A, 24 to 240VAC or 30VDC max., resistive load, 100,000 cycles at rated load, requires a min. load of 20mA at 24V, 125VA pilot duty

NO-ARC Relay Output
- Form A, 12A at 122°F (50°C), 85 to 264VAC, no VDC, resistive load, 2 million cycles at rated load

Universal Process/Retransmit Output
- Range selectable
- 0 to 10VDC ±15mV into a min. 1,000Ω load with 2.5mV nominal resolution
- 0 to 20mA ±30µA into max. 800Ω load with 5µA nominal resolution
- Temperature stability 100ppm/°C

F4T

F4T Flex Module—Mixed I/O Ordering Information

Part Number

①②	③ Module ID Type	④ Future Option		⑤ Input Hardware	⑥⑦ Output Hardware Options	⑧ Future Option		⑨ Future Option	⑩ Custom Options and Connectors	⑪⑫ Custom Options- Firmware, Overlay, Preset Parameters, Locked Code
FM	M	A	-			A	-	A		

③	Module ID Type
M =	Mixed I/O

④	Future Option
A =	Future Option

⑤	Input Hardware
A =	None
U =	Universal input - T/C, RTD 2- or 3-wire, 0-10VDC, 0-20mA
T =	Thermistor input
C* =	Current transformer input
***Note:** If option C is ordered than the following options are NOT valid for Outputs 1 & 2: FA, FC, FJ and FK.	

⑥⑦	Output Hardware Options	
	Output 1	**Output 2**
AA =	None	None
AJ =	None	Mechanical relay 5A, Form A
AK =	None	SSR Form A, 0.5A
CA =	Switched dc/open collector	None
CH =	Switched dc/open collector	NO-ARC 12A power control
CC =	Switched dc/open collector	Switched dc
CJ =	Switched dc/open collector	Mechanical relay 5A, Form A
CK =	Switched dc/open collector	SSR Form A, 0.5A
EA =	Mechanical relay 5A, Form C	None
EH =	Mechanical relay 5A, Form C	NO-ARC 12A power control
EC =	Mechanical relay 5A, Form C	Switched dc
EJ =	Mechanical relay 5A, Form C	Mechanical relay 5A, Form A
EK =	Mechanical relay 5A, Form C	SSR Form A, 0.5A
FA =	Universal process/retransmit	None
FC =	Universal process/retransmit	Switched dc
FJ =	Universal process/retransmit	Mechanical relay 5A, Form A
FK =	Universal process/retransmit	SSR Form A, 0.5A
KH =	SSR Form A, 0.5A	NO-ARC 12A power control
KK =	SSR Form A, 0.5A	SSR Form A, 0.5A

⑧	Future Option
A =	Future Option

⑨	Future Option
A =	Future Option

⑩	Custom Options and Connectors
A =	Right angle screw connector (standard)
F =	Front screw connector

⑪⑫	Custom Options - Firmware, Overlay, Preset Parameters, Locked Code
AA =	Standard with quick start guide
AB =	Standard without quick start guide
AC =	Replacement connectors hardware only - for the entered model number
XX =	Custom

F4T

F4T Flex Module—Limit Ordering Information

Part Number

①②	③ Module ID Type	④ Future Option		⑤⑥⑦ Input and Output Hardware	⑧ Future Option		⑨ Future Option	⑩ Custom Options and Connectors	⑪⑫ Custom Options- Firmware, Overlay, Preset Parameters, Locked Code
FM	L	A	-		A	-	A		

③	Module ID Type
L =	Limit

④	Future Option
A =	Future Option

⑤⑥⑦	Functions	Auxiliary Output Hardware	Limit Output Hardware	Auxiliary Input Hardware
LCJ =	Limit control with universal input	Switched dc/ open collector	Mechanical relay 5A, Form A	None
LEJ =	Limit control with universal input	Mechanical relay 5A, Form C	Mechanical relay 5A, Form A	None
LAJ =	Limit control with universal input	None	Mechanical relay 5A, Form A	None
MCJ =	Limit control with thermistor input	Switched dc/ open collector	Mechanical relay 5A, Form A	None
MEJ =	Limit control with thermistor input	Mechanical relay 5A, Form C	Mechanical relay 5A, Form A	None
MAJ =	Limit control with thermistor input	None	Mechanical relay 5A, Form A	None
YEB =	Limit control with temperature input	None	Mechanical relay 5A, Form C	Single digital input (limit reset)

Notes: Universal input = T/C, RTD 2- or 3-wire, 0-10VDC, 0-20mA
Temperature input = T/C and RTD 2-wire only

⑧	Future Option
A =	Future Option

⑨	Future Option
A =	Future Option

⑩	Custom Options and Connectors
A =	Right angle screw connector (standard)
F =	Front screw connector

⑪⑫	Custom Options - Firmware, Overlay, Preset Parameters, Locked Code
AA =	Standard with quick start guide
AB =	Standard without quick start guide
AC =	Replacement connectors hardware only - for the entered model number
XX =	Custom

F4T

F4T Flex Modules—Communication Ordering Information

Part Number

①②	③ Module ID Type	④ Future Option		⑤ Comm. Option	⑥⑦⑧ Future Options		⑨ Future Option	⑩ Custom Options and Connectors	⑪⑫ Custom Options- Firmware, Overlay, Preset Parameters, Locked Code
FM	C	A	-	2	AAA	-	A		

③ Module ID Type	
C =	Communications

④ Future Option	
A =	Future Option

⑤ Communications Option	
2 =	Modbus® RTU 232/485

Note: EIA-232/485 Modbus® RTU flex module, if used, must occupy F4T slot 6 location.

⑥⑦⑧ Future Options	
AAA =	Future Options

⑨ Future Option	
A =	Future Option

⑩ Custom Options and Connectors	
A =	Right angle screw connector (standard)
F =	Front screw connector

⑪⑫ Custom Options - Firmware, Overlay, Preset Parameters, Locked Code	
AA =	Standard with quick start guide
AB =	Standard without quick start guide
AC =	Replacement connectors hardware only - for the entered model number
XX =	Custom

Accessories

Part Number	Description
0830-0870-0000	Protective screen cover (2 per pack)
0822-0705-0000	F4T 1/4 DIN mounting collar - thru front panel mount
0216-1285-0000	Flushmount - mounting adapter plate
0847-0400-0000	USB 2.0 to RJ45 Ethernet adapter
0238-1245-ALUM	Accent bar (brushed aluminum gray)
0238-1245-REDD	Accent bar (brushed aluminum red)
0238-1245-BLUE	Accent bar (brushed aluminum blue)
16-0246	Current transformer
0804-0147-0000	RC supression - Quencharc®
0601-0001-0000	Controller support tools (DVD)
0830-0808-0001 (CAPUSB-MB5)	Rubber plug USB mini
0830-0808-0002 (CAPUSB-A)	Rubber plug USB host
0830-0858-0000	Replacement battery
0822-0769-0000	Module slot plug (for vacant F4T slots without flex modules)

Recommended Third-Party Components

Mfg.	Mfg. Part Number	Description	Web Site
Amphenol	USBF 21N SCC	USB - A receptacle with self closing cap	www.alliedelec.com
Amphenol	USBBF 21N SCC	USB - B receptacle with self closing cap	www.alliedelec.com
Amphenol	RJF 21N SCC	RJ45 receptacle with self closing cap	www.alliedelec.com
Molex	847290006	USB type A panel mount with 2 m cord	www.alliedelec.com
Molex	84700-0003	Dust cover	www.alliedelec.com

Documentation

1720-6742	Installation and Troubleshooting User's Guide
1680-2414	Setup and Operations User Guide
1440-3329	F4T Controller Quick Start Guide
0600-0095-0000	Communications Flex Modules Quick Start Guide
0600-0096-0000	High Density Flex Modules Quick Start Guide
0600-0097-0000	Mixed I/O Flex Modules Quick Start Guide

D4T™ 1/4 DIN

The D4T™ data logger offers a wide range of field removable I/O modules for maximum design flexibility. Configurations can be custom tailored to meet the scaling needs of a tremendous range of equipment and applications while providing exactly the hardware types required for compatibility. The D4T data logger also features a 4.3 inch, color, graphical touch panel. Combining power, flexibility and functionality, this new data logger offers unmatched versatility, and its best-in-class ease of use could very well make user manuals a thing of the past.

Watlow's D4T is available through Watlow ***SELECT***®, a program that enables you to quickly identify, configure and receive your thermal products faster and easier than ever before. With ***SELECT***, you use a variety of tools to guide your decision, configure products for an exact fit and quickly receive your order.

Features and Benefits

4.3-inch, color touch panel with high-resolution, graphical user-interface

- Shortens learning curve and reduces operator errors
- Allows channels, alarms, inputs and outputs to be personalized with user defined names
- Intuitive screens layout and menu navigation
- Programmable to show information in multiple languages

Data logging

- Easily complies with regulatory standards with ability to choose encrypted, .CSV or both types of file formats for tamper proof record needs
- Enables security using lock-out security levels for different user groups
- Simplifies record keeping management with ability to archive records to the cloud or a connected PC network
- Flexibility to select which parameters to log from one to up to 128 points simultaneously
- Choose where you want to store the files—inside the controller, on a connected USB memory device, or to a connected PC anywhere in the world
- Record as fast as one time per 0.1 second or as slow as one time per hour

One to 24 channel data logger

- Scalable channels, pay for only what you need
- Compatible with temperature, altitude, humidity, ac current and other 0-10VDC or 0-20mA process units
- Flexibility to meet diverse process applications
- Field expandable channels and I/O if application needs grow in the future



Email and text alerts

- Notifies users of an event that has occurred such as an alarm condition or analog input error

Batch processing with bar code data entry

- Easily collects and manages data records
- Inputs information from bar code scan for fast and easy data entry
- Provides data security through password and data log encrypted file options
- Improves manufacturing robustness via reminder screens ensuring all data is entered during processing
- Helps ensure compliance with growing regulations and minimizes warranty exposure
- Eliminates part processing skips or walk arounds due to improved quality control
- Produces formatted data record report for easy receipt or record management uses

Modular design

- Adapts quickly to evolving requirements
- Offers numerous types of field pluggable modules for maximum flexibility and easiest compatibility
- Features scalable and modular firmware functions
- Delivers scalable input/output quantities from one to 24

Trend screens

- Create up to four unique trend graph screens
- Graph any input sensor or process value

COMPOSER graphical configuration PC software

- Speeds up and simplifies commissioning
- Archives and documents controller setup
- Connects with controller easily via Ethernet

Many communications options available including EtherNet/IP™, Modbus® TCP (Ethernet) SCPI and EIA-232/485 Modbus® RTU

- Offers two USB host ports and one device port
- Simplifies file transfers
- Connects easily

D4T 1/4 DIN

Key Features and Options

- Ethernet Modbus® TCP connectivity
- Multiple high-speed USB host ports
- Universal, thermistor and ac current measurement inputs
- Inputs and outputs expandable from one to 24
- Programmable timers, counters, math and logic
- Temperature, altitude, relative humidity and Vaisala® humidity compensation
- USB configuration port
- Configuration settings can be stored and recalled
- Removable modules and connectors
- Front-panel mount and flush mounting options
- Right angle and front-screw terminal options
- UL® listed, CSA, CE, RoHS, W.E.E.E., FM
- Multi-language options
  - English, German, French, Italian, Spanish, Japanese, Korean and Chinese
- USB wired or wireless mouse user interface
  - Use in hazardous location, dirty environments or applications with gloves

Common Specifications

Line Voltage/Power

- Data retention upon power failure via nonvolatile memory

Functional Operating Range

- Type J: -346 to 2192°F (-210 to 1200°C)
- Type K: -454 to 2500°F (-270 to 1371°C)
- Type T: -454 to 750°F (-270 to 400°C)
- Type E: -454 to 1832°F (-270 to 1000°C)
- Type N: -454 to 2372°F (-270 to 1300°C)
- Type C: 32 to 4200°F (0 to 2315°C)
- Type D: 32 to 4200°F (0 to 2315°C)
- Type F: 32 to 2449°F (0 to 1343°C)
- Type R: -58 to 3214°F (-50 to 1767°C)
- Type S: -58 to 3214°F (-50 to 1767°C)
- Type B: 32 to 3300°F (0 to 1816°C)
- RTD (DIN): -328 to 1472°F (-200 to 800°C)
- Process: -1999 to 9999 units

Calibration Accuracy

- Calibration accuracy and sensor conformity: ±0.1% of span, ±1°C at the calibrated ambient temperature and rated line voltage
  - Types R, S, B: ±0.2%
  - Type T below -50°C: ±0.2%
- Calibration ambient temperature at 77°F ±5°F (25°C ±3°C)
- Accuracy span: 1000°F (540°C) min.
- Temperature stability: Typical ±0.1°F/°F (±0.1°C/°C) rise in ambient max.

Configuration Diagnostics

- Indicates if modules present match the expected configuration settings

USB Host Port

- Total of 2 available
- Version: USB 2.0 hi-speed
- Connector: USB Type A, high-retention
- Flash drive must be FAT32 file system
- Max. current 0.5A/port

System Configuration Requirements

- D4T has 6 slots for flex modules (FM)
- EIA-232/485 Modbus® RTU flex module, if used, must occupy slot 6 location
- A maximum of two 10A SSR FM modules can be used in the F4T and each will require space for 2 slots. Valid in slots 1, 2, 4 or 5

Wiring Termination—Touch-Safe Terminals

- Right-angle and front-screw terminal blocks for input, output and power supply connections
- Input, output and power terminals: Touch safe, removable, 12 to 30 AWG

D4T Base Specifications

Line Voltage/Power

- High voltage option: 100 to 240VAC +10/-15%, 50/60Hz ±5%
- Low voltage option: 24 to 28VAC/VDC+10/-15%, 50/60Hz ±5%
- Power consumption: 23 W, 54VA

User Interface

- 4.3 inch TFT PCAP color graphic touch screen
- LED backlife >50K hours
- 4 keys: Home, Main Menu, Back, Help
- Multiple languages
  - English, German, French, Italian, Spanish, Japanese, Korean and Chinese
- USB wired or wireless mouse functionality
  - Right click for 4 keys: Home, Main Menu, Back, Help

Environment

- NEMA 4X/IP65 front panel mount configuration only
- Operating temperature: 0 to 122°F (-18 to 50°C)
- Storage temperature: -40 to 185°F (-40 to 85°C)
- Relative humidity: 0 to 90%, non-condensing

Agency Approvals

- UL®/EN 61010 Listed, File E185611 QUYX
- UL® 508 Reviewed
- CSA CC.C#14, File 158031
- AMS 2750 E compliant: Analog input process values. Tip: Maximize field calibration accuracy and uniformity by using advanced F4T features such as Calibration Offset and Linearization Function Blocks. Refer to user manual for details
- RoHS by design, China RoHS Level 2, W.E.E.E.
- CE
- Windows® Hardware Certification

D4T 1/4 DIN

Inputs and Outputs
- Input sampling: 10Hz
- Output update: 10Hz

Communications
- Modbus® TCP (Ethernet)
- EIA-232/485 Modbus® RTU
- Isolated communications

Data Logging
- User selectable parameters: Up to a maximum of 128 active parameters depending on configuration
- Logging interval: Programmable increments between 0.1 seconds and 60 minutes if logging to internal memory. Logging directly to USB; 1.0 seconds to 60 minutes
- File types: .CSV for standard data logging or proprietary format for encrypted data log option
- Storage: 80MB internal memory or to USB memory stick
- File transfer: Internal memory to USB host port or to Ethernet Modbus® TCP
- Transfer options: On demand by user or user programmable based on when a new data log file record is available. Utilizes TFTP and Samba protocols
- Record: Date and time stamped

Batch Processing with Bar Code Data Entry Via USB Scanner
- Compatible with many bar code types including Code 128, Code 39, Extended Code 39, Data Matrix, Interleaved 2 of 5, ISSN, SISAC, LOGMARS, QR, UCC/EAN-128 (GS1-128, UPC-A & E)
- Compatible with most USB scanner types such as Zebra DS4308, DS2208, LI2208 and LS2208
- USB port provides 500mA max. power supply for bar code scanner/base charging
- Display can show bar code fields up to a maximum length of 48 characters. Characters might wrap to 2 rows after 24 characters
- Program the bar code scanner to add an enter key (carriage return feed) at the end of each bar code data field sent to the F4T/D4T. Refer to USB scanner user manual

Trending
- 4 user programmable charts
- 6 pens available per chart
- View analog sensors and process values

Real Time Clock with Battery Backup
- Accuracy (typical): +/-3ppm over -15 to 50°C
- Typical battery life: 10 years at 77°F (25°C)
- Field replaceable lithium battery

Number of Function Blocks by Ordering Option

Function Block	Basic	Set 1	Set 2
Alarm	6	8	14
Compare	None	4	16
Counter	None	4	16
Linearization	4	4	8
Logic	None	12	24
Math	None	12	24
Process Value	4	4	8
Special Output Function (including compressor)	None	2	4
Timer	None	6	16
Variable	4	12	24

Compare
- Greater than, less than, equal, not equal, greater than or equal, less than or equal

Counters
- Counts up or down, loads predetermined value on load signal

Linearization
- Interpolated or stepped

Logic
- And, nand, or, nor, equal, not equal, latch, flip-flop

Math
- Average, process scale, switch over, deviation scale, differential (subtract), ratio (divide), add, multiply, absolute difference, minimum, maximum, square root, sample and hold, pressure-to-altitude and dew point

Process Value
- Sensor backup, average, crossover, wet bulb-dry bulb, switch over, differential (subtract), ratio (divide), add, multiply, absolute difference, minimum, maximum, square root, altitude, Vaisala® relative humidity and pressure-to-altitude

Special Output Function
- Compressor control (cool and/or dehumidify with single compressor), motorized valve, sequencer

Timers
- On pulse, delay, one shot or retentive

Variable
- User value for digital or analog variable

D4T 1/4 DIN

Panel Mount Dimensions

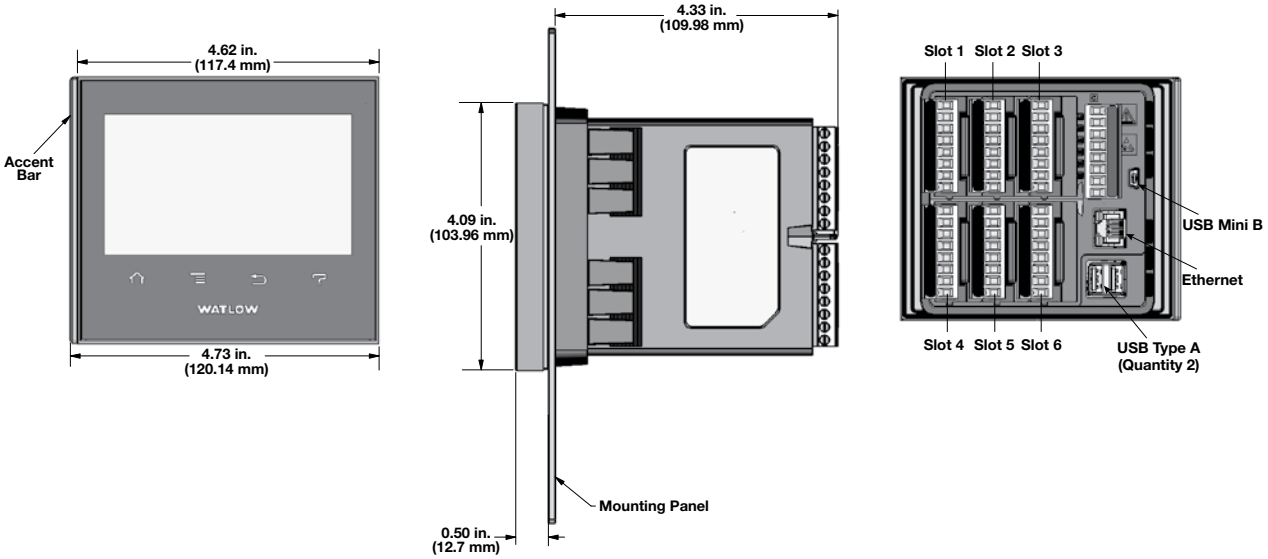

Flush Mount Dimensions

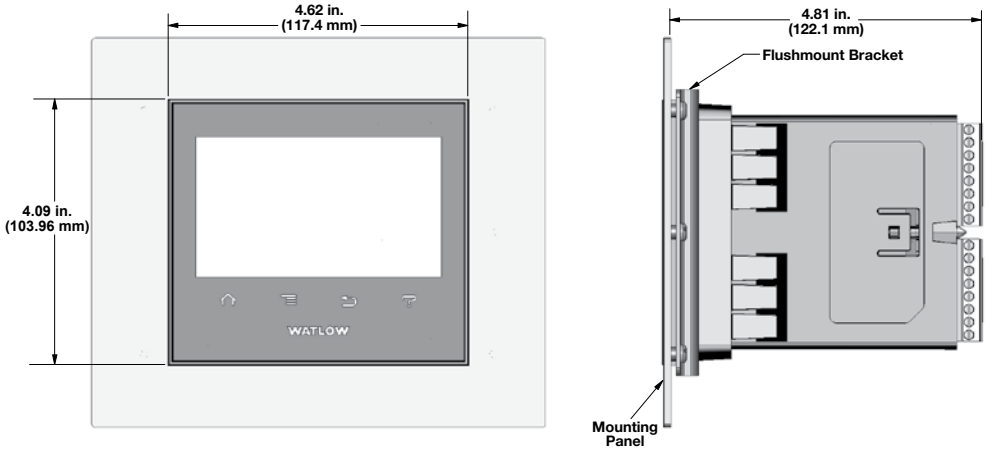

D4T 1/4 DIN

Ordering Information

Base includes: 4.3 inch color graphical touch screen, standard bus communications, Ethernet Modbus® TCP and SCPI protocol

Part Number

①② Model	③ Base Type	④ Appl. Type	⑤ Data Logging & Trend Charts	⑥ Pwr. Sup. Voltage, Conn. Style, Watlow Logo Screenprint	⑦ Function Blocks	⑧⑨ Future Options	⑩⑪ Doc., Accent Bar, Replacement Conn. & Custom	⑫ Add'l Options	⑬⑭ Nbr. Logging Channels & Input Hardware Types	⑮ Nbr. of Aux./Alarm Outputs, Digital Inputs & Hardware
D4	T					AA		5		

③ Base Type	
T =	Touch screen

④ Application Type	
1 =	Standard

⑤ Data Logging and Trend Charts	
J =	Data logging
K =	Data logging with encrypted files
L =	Data logging with graphical trend charts
M =	Data logging with encrypted files, graphical trend charts and batch processing with bar code data entry

⑥ Power Supply Voltage, Connector Style, Watlow Logo Screenprint

	Power Supply	Power Supply Connector	Watlow Logo
1 =	100 to 240VAC	Right angle (standard)	Yes
2 =	100 to 240VAC	Right angle (standard)	No
3 =	100 to 240VAC	Front screw	Yes
4 =	100 to 240VAC	Front screw	No
5 =	24 to 28VAC or VDC	Right angle (standard)	Yes
6 =	24 to 28VAC or VDC	Right angle (standard)	No
7 =	24 to 28VAC or VDC	Front screw	Yes
8 =	24 to 28VAC or VDC	Front screw	No

⑦ Function Blocks

	Basic Set	Set 1	Set 2
A =	X		
B =		X	
C =			X

⑧⑨ Future Options	
AA =	Future Options

⑩⑪ Documentation, Accent Bar, Replacement Connectors & Custom

	Documentation DVD/QSG	Decorated Brush Aluminum Accent Bar			
		Gray	Blue	Red	None
1A =	Yes	X			
1B =	Yes		X		
1C =	Yes			X	
1D =	Yes				X
1E =	No	X			
1F =	No		X		
1G =	No			X	
1H =	No				X
1J =	Replacement connectors only - for the model number entered				
XX =	Contact factory, other custom-firmware, preset parameters, locked code, logo				

⑫ Additional Options	
5 =	None

⑬⑭ Number of Logging Channels & Input Hardware Types	
Universal Input(s) (T/C, RTD 2- or 3-wire, 0-10VDC, 0-20mA)	
U1 =	1 channel
U2 =	2 channels
U3 =	3 channels
U4 =	4 channels
U5 =	5 channels
U6 =	6 channels
Thermistor Input(s)	
T1 =	1 channel
T2 =	2 channels
T3 =	3 channels
T4 =	4 channels
T5 =	5 channels
T6 =	6 channels
Universal Input(s) (T/C, RTD 2-wire, 0-10VDC, 0-20mA)	
04 =	4 channels
08 =	8 channels
12 =	12 channels
16 =	16 channels
20 =	20 channels
24 =	24 channels
Thermistor Input(s)	
TA =	4 channels
TB =	8 channels
TC =	12 channels
TD =	16 channels
TE =	20 channels
TF =	24 channels
Custom	
XX =	Different channel quantity and combination options. Contact factory for assistance.

⑮ Number of Auxiliary/Alarm Outputs, Digital Inputs & Hardware	
Options below are not available with 6 or 24 channel input models	
A =	None
Single Output	
C =	1 switched dc/open collector
E =	1 mechanical relay 5A, Form C output
F =	1 universal process/retransmit
Multiple Digital Inputs/Outputs	
D =	6 digital I/O
P =	3 universal process/retransmit outputs
B =	3 mechanical relay 5A, 2 Form C and 1 Form A (Form A shares a common with 1 Form C)
J =	4 mechanical relay 5A, Form A
K =	2 SSRs Form A, 0.5A
T *=	2 SSRs at 10A
L =	2 SSRs at 2A each, SSRs grouped in 2 pairs with each pair sharing a common
Communications	
M =	Modbus® RTU 232/485
Custom	
X =	Different output quantity and combination options. Contact factory for assistance.
*Option "T" not available with digit 13 & 14, options U5, U6, T5, T6, 20, 24, TE and TF.	

RMA PLUS™ Remote Access Module

Watlow's RMA PLUS™ remote access module supports Watlow's powerful EZ-ZONE® RM temperature controller family by communicating with and providing access to all EZ-ZONE RM modules in a system.

EZ-ZONE RMA users have had to spend more time than desired to connect their entire system. Now the RMA PLUS offers standard state-of-the-art connectivity from the device to the entire system. Real-time communication is possible via a built-in Ethernet switch or USB. Users can also connect to third-party and legacy devices because the RMA PLUS acts as a gateway between Modbus® TCP and Modbus® RTU.

The device comes standard with a built-in managed Ethernet switch with two Ethernet jacks. Up to three Modbus® TCP sessions, three Watbus over Ethernet sessions and one Watbus over USB session is available in a single device. Users can also log up to 16 gigabytes of data standard or upgrade to a maximum of 32 gigabytes. Configuration and data logs are available as Windows® files so they can be easily accessed. In addition, discovery and transfer speeds have gone from minutes with the legacy EZ-ZONE RMA to just seconds with the RMA PLUS.

Because the RMA PLUS is an essential component of the EZ-ZONE RM family, users receive all the benefits and support of working with Watlow®.

To view a comparison between the legacy EZ-ZONE RM Access Module and the new RMA Plus go to www.watlow.com/rmaplus.



Features and Benefits

Plug and play access to EZ-ZONE RM family

- Integrates easily into existing systems

Built-in Ethernet switch

- Eliminates the need to provide a switch for small systems
- Offers port mirroring for troubleshooting
- Protects from broadcast and multicast storms

Integrated USB connection

- Provides easy connection from PC with no converter
- Ensures real-time communication from software packages

Modbus® TCP and Modbus® RTU

- Allows users to build tables based on individual needs
- Connects to third-party and legacy devices

Data logging

- Offers users the opportunity to log any data point in the system

RMA PLUS Remote Access Module

Specifications

(Select a RMA PLUS module for communication protocol options, data logging and system configuration)

Interoperable with:
- EZ-ZONE RM (C, E, H, L, S) version 9.0+ (high-speed Watbus)
- EZ-ZONE RM (A, C, E, H, L, S) (low-speed Watbus)
- EZ-ZONE PM, RUI, ST (low-speed Watbus)
- EZ-ZONE RM (F, G, UH, Z)
- POWERGLIDE®

Line Voltage/Power
- Power consumption: 4 W, 9VA
- Any external power supply used should comply with a Class 2 or SELV rating

Isolated Serial Communications
- All modules ship with standard bus protocol (Watbus) for configuration and communication connection to all EZ-ZONE products

Standard Communication
- Watbus over Ethernet (gateway to high-speed Watbus)
- Watbus over USB (gateway to high-speed Watbus)
- Watbus via Serial ('C' connector)
- Modbus® TCP

Additional Communication Options
- EIA 232/485, Modbus® RTU
- DeviceNet™ (future option)
- EtherNet/IP™ (future option)

USB
- USB 2.0 device
- Mini USB connector type
- Recognized as a composite device: Vendor specific and mass storage classes
- USB host (future option)

Real Time Clock with Battery Backup
- Accuracy (typical): +/- 30ppm at 77°F (25°C)
- +30/-100ppm overtemperature operating range
- Battery type and typical lifetime rating: 10 years at 77°F (25°C)
- Lithium battery used, recycle properly

Data Logging
- Maximum of 2000 valid records
- Maximum of 500 unique data points per Watbus bus and zone
- File storage on embedded micro SD memory
- Comma separated value (.CSV) file type
- Access log files via USB device port

Memory Card
- Micro SDHC (4-32GB)
- 4GB class 4 SDHC on standard models (operating temperature: -25 to 85°C)
- 16GB class 10 SDHC on data log models (operating temperature: -40 to 85°C)
- -4 to 185°F (-20 to 85°C) ambient rating, non-volatile memory

Note: All module parameters are backed up in memory.

RMA PLUS Remote Access Module

Ordering Information

Module for communications, data logging and storage. Comes standard with Modbus® TCP, standard bus over Ethernet, USB device, internal storage and SD card

Part Number

①②③④ EZ-ZONE Rail Mount	⑤ Additional Communication Protocols	⑥ Ultra High Density Thermocouple Input Card	⑦ Data Logging	⑧ Wireless Connectivity		⑨ Future Option	⑩ Future Option	⑪⑫ Additional Options
RMAP	-				-	A	A	

⑤	Additional Communication Protocols
A =	None
2 =	Modbus® RTU 232/485
5 =	DeviceNet™ (future option)

⑥	Ultra High Density T/C Input Card
A =	None
1 =	18 T/C scanner inputs (future option)
2 =	18 T/C limit inputs with one global relay output (future option)

⑦	Data Logging
A =	None
D =	Data logging to 16G SD card

⑧	Wireless Connectivity
A =	None
B =	Bluetooth® (future option)
W =	Wi-Fi (future option)

⑨	Future Option
A =	Future option

⑩	Future Option
A =	Future option

⑪⑫	Additional Options
AA =	Standard
XX =	Custom/locked code application specific

EZ-LINK™ Mobile App

Watlow's EZ-LINK™ mobile app allows users to easily set up and monitor Watlow® PM PLUS™ and EZ-ZONE® PM controllers via Bluetooth® wireless technology. The app is available free-of-charge from the app stores for phones and tablets, and provides access to the controller's parameters with fully spelled out names in plain text with help topics that explain each parameter and option.

When connected to a controller, the app's dashboard view displays up to 20 parameters. Users can configure which parameters appear on the dashboard view with the controller's custom home page. The all parameters feature in the app allows users set up the controller's inputs, control settings, alarms, outputs and other features and functions.

In addition to controller setup, monitoring and adjusting, the EZ-LINK mobile app provides many benefits to the user including password protection, alarm and error indicators, connection to Watlow for feedback and support and accessing device information such as firmware version, part number and serial number.

The app works with all PM PLUS and 1/16 DIN EZ-ZONE PM controllers and limits with Bluetooth® wireless technology. This option is approved for use in the U.S., Australia, Canada, Colombia, the European Union, Japan, and New Zealand with more locations coming soon.



Features and Benefits

Wireless communication

- Connect to controllers up to 70 feet (21.3 meters away)
- Eliminates need to access the back of the controller, USB-to-485 converter and error-prone wiring

Save and import system image files via Bluetooth®

- Makes a complete record of controller settings in a file
- Accurately copies or restores saved settings from a file to a controller

Portable system image files

- Send and receive files via email, messaging and other sharing methods
- View the controller configuration by opening the file on a PC with Watlow's COMPOSER software
- Create a file with COMPOSER and email it to a phone to support updating controllers in the field with the app

All parameters feature

- Allows user to interactively set up the controller's inputs, control settings, alarms, outputs and other functions

Uses controller's custom home page and password security settings

- Adapts to the application by presenting the same parameters as found on the controller's custom home page
- Allows full access, read-only access or no access to home page and all parameters feature based controller's password protection settings

Visual device ping and controller naming

- Identifies which controller is connected when several controllers are within range
- Allows user to name the controller and easily find it again the next time

EZ-LINK Mobile APP

Illustrated Features



Provides access to controller's home page parameters

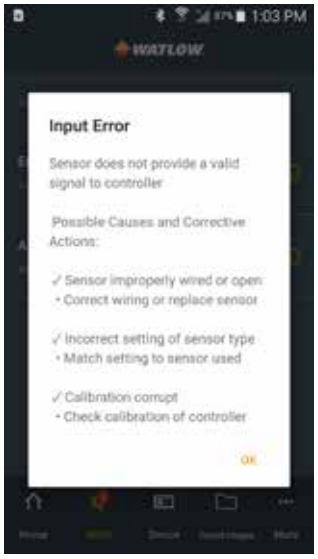

Decodes alarms, errors and messages



Save and import system image files via Bluetooth®



Makes setting up controllers easy with readable text...



...intuitive operation

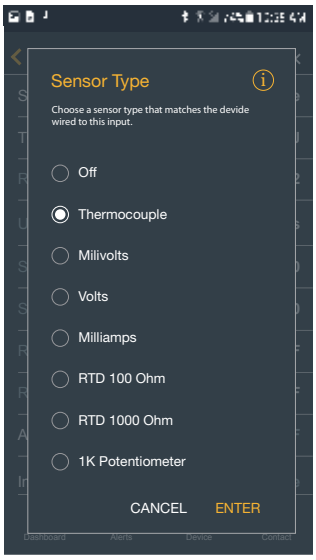

...and help for each parameter

Compatibility

The EZ-LINK mobile application is compatible with all PM PLUS and 1/16 DIN EZ-ZONE PM controllers and limits that have the Bluetooth® communications option.

System Requirements

Android™

- Compatible versions: 6, 7, 8 and 9

Apple®

- Compatible versions: 10, 11 and 12

Supported devices

- Designed for phones, compatible with tablets. Download the EZ-LINK App at Google Play for Android™ or App Store for iPhone®.

EZ-ZONE® RMG

The EZ-ZONE® RMG controller with Adaptive Thermal Systems® (ATS™) technology is Watlow's controller for gas delivery applications. This rail-mounted controller is versatile regarding mounting within a semiconductor gas chamber and provides distributed control up to 12 amps from four outputs (up to three amps per circuit).

Watlow's ATS technology provides detection of mis-wired heaters by offering a "ping" feature test system allowing users to obtain immediate feedback from soft power prior to turning on the main power. A small amount of power is applied, and the system is tested against the input data from the free software tool. If any data does not match, including ground fault detection, a fault condition occurs signaling the built-in global replay to shut down the system. This feedback prevents catastrophic conditions associated with overheated or cold spots within the gas line system.



Features and Benefits

Offers a combination of thermocouple inputs (up to 18 per printed circuit board assembly) and field effect transistor outputs (four three-amp outlets)

- Allows users to mix and match inputs and outputs for maximum system flexibility

Built-in diagnostics

- Enables real-time data of line heating to master controller on tool

Plug and play

- Adapts directly with the EZ-ZONE RMZ EtherCAT® module

Specifications

Environment

- Unit ambient rating -18 to 65°C, 0 to 90% RH non-condensing, IP code (IP20)

EZ-ZONE RMG Card

- Ambient temperature rating (electronics) -18 to 65°C
- Heater current 4 channels at 3A, low voltage 20 to 40VDC, high voltage 85 to 336VDC

EZ-ZONE RMUH Card

- Ambient temperature rating (electronics) -18 to 65°C TC accuracy ± 1.0°C (pending qualification), limit relay 5A, 240VAC, RS485 standard bus, USB device

Communication Protocol via EZ-ZONE RMZ

- EtherCAT® ETG.5003.2060 compliant, Watlow standard bus, DeviceNET™

EZ-ZONE RMUH

Configure this module as an ultra high-density input module for a total of 36 inputs, including limits and control loops.

EZ-ZONE RMG

Ordering Information - RMG

Part Number

① ② EZ-ZONE Rail-Mount	③ Gas Line Heater	④ Output Card Voltage Rating	⑤ ⑥ Control Card	⑦ ⑧ Limits	⑨ ⑩ Control Loops	⑪ ⑫ Outputs	⑬ Future Option	⑭ ⑮ Custom/Locked Firmware
RM	G						A	

④	Output Card Voltage Rating
L =	Low voltage 20 to 40VDC +10%, -15%
H =	High voltage (rectified 100 to 240VAC) +10%, -15% (future option)

⑤ ⑥	Control Card
AA=	No input card selected
##=	Any number 01 to 18 = number of thermocouple sensors

⑦ ⑧	Limits
AA=	None
##=	01 to 18 number of sensors directed to supervisory global relay

⑨ ⑩	Control Loops
AA=	None
##=	01 to 18 number of control loops

⑪ ⑫	Outputs
AA=	None
##=	01 to 08 number of 3 amp outputs If > than 2 A007-3081-000X cards installed

⑬	Future Option
A =	Standard

⑭ ⑮	Custom/Locked Firmware
AA=	Standard
XX=	Custom = Any two letters of number for non-critical firmware or cosmetic options

Ordering Information - RMUH

Part Number

① ② EZ-ZONE Rail-Mount	③ ④ Ultra High Density Input	⑤ ⑥ Inputs	⑦ ⑧ Limits	⑨ ⑩ Control Loops	⑪ ⑫ Custom/ Locked Firmware
RM	UH				

⑤ ⑥	Inputs
##=	Any number 01 to 36 = number of thermocouple sensors

⑦ ⑧	Limits
AA=	None
##=	01 to 36 number of sensors directed to supervisory global relay

⑨ ⑩	Control Loops
AA=	None
##=	01 to 36 number of control loops

⑪ ⑫	Custom/Locked Firmware
AA=	Standard
XX=	Custom = Any two letters of number for non-critical firmware or cosmetic options

EZ-ZONE® RMT

Watlow's EZ-ZONE® RMT controller with Adaptive Thermal Systems (ATS™) technology is a critical component in Watlow's line heating control system for semiconductor gas delivery and exhaust applications.

While other line heating systems require a maze of wires associated with input, output and over-temperature protection, the line heating system with ATS technology streamlines the solution by offering closed loop control with integrated over-temperature safety protection for each heater with just two wires managed entirely by one EZ-ZONE RMT controller. The efficiency helps prevent system issues our customers may otherwise experience.

The need to integrate fewer controllers makes installation quicker and easier by cutting the required heater connections by two thirds. It also reduces costs and provides a more spatially-efficient system.



Features and Benefits

Allows for direct wiring of 208VAC
- Offers commonly available line voltage

Provides built-in diagnostics of each zone
- Enables real-time data of line heating to master controller on tool

Removes complications and nuisance components by migrating functions from the heater to the controller
- Creates a clean, aesthetic loop with just two wires

Incorporates an improved fault detection system
- Provides connectivity to all zones to locate and fix system issues as quickly as possible

Intelligent design
- Allows for better diagnostics, reliability and product life expectancy
- Lowers total cost of ownership

Reduces the number of design iterations needed
- Provides a complete thermal system with significantly reduced lead times

Connects via EtherCAT®
- Alligns with industry-standard communications protocol

EZ-ZONE RMT

Specifications

Voltage
- 208VAC ±10%

Ambient Ratings
- -18 to 65°C

Humidity
- 0 to 90% non-condensing

Altitude
- Maximum 2,000 meters

Installation Category II
- Pollution degree category 2
- No maintenance requirements or field serviceable parts apply to the EZ-ZONE RMT controller

Safety Relay
- 2 amps resistive, 24 - 240VAC or 30VDC, 125VA pilot duty 120/240VAC, 25VA at 24VAC

Agency Directives
- **ISO 13849-1 Safety of Machinery** - Safety-related parts of control systems - Part 1: General principles for design (Category 2 and performance level C)

  Third Edition, dated December 15, 2015

UL® 61010-1 Standard for Safety
- Electrical Equipment for measurement, control and laboratory use; Part 1: General requirements

  Third Edition, Dated May 11, 2012

Ordering Information

Part Number

①② EZ-ZONE Rail-Mount	③ Primary Product Function	④ Future Option	⑤⑥ Control/ Limit Loops	⑦⑧ Heater Technology	⑨ Future Option	⑩ Future Option	⑪⑫ Customization
RM	T	A			A	A	

③	Primary Product Function
T =	TC heater sensor with integrated limit

④	Future Option
A =	Standard product

⑤⑥	Control/Limit Loops
06=	6 control loops (1 module card installed)
12=	12 control loops (2 module cards installed)

⑦⑧	Heater Technology
CL=	Cloth heaters
SR=	Silicone rubber heaters

⑨	Future Option
A =	Standard product

⑩	Future Option
A =	Standard product

⑪⑫	Customization
AA=	Standard product
XX=	Any two letters or number for custom non-critical options

POWERGLIDE®

POWERGLIDE® is a unique embodiment of Watlow's Adaptive Thermal Systems® (ATS™) technology and combines temperature and power control into one ATS-enabled device ideal for semiconductor processing applications.

The process activities in a semiconductor chamber can cause the inner and outer zones of a two-zone aluminum nitride ceramic pedestal to change temperature, sometimes in different directions. Open loop or power ratio control is the current method of determining how much power to deliver to the outer zone based on the power of the inner zone, since there is typically no sensor in the hard-to-access outer zone. This causes the outer zone to react in the same manner as the inner zone when the boundary conditions change due to gas introduction, pedestal repositioning, plasma application or wafer placement. This parallel action might be opposite of what is needed to maintain proper temperature uniformity. This can cause significant temperature difference in the inner and outer zones resulting in poor thermal uniformity and reduction in yield. In addition, when the temperature delta between the zones becomes too large cracked pedestals and broken wafers are typical non-desired results.

Watlow's solution… POWERGLIDE, enabled with ATS technology, a next generation controller.

Watlow's new POWERGLIDE enables certain two-zone aluminum nitride ceramic pedestals to perform more efficiently. It runs closed loop and monitors temperature from both zones to improve uniformity, help prevent ceramic breakage, achieve higher temperatures and provide visibility to changing conditions.

With POWERGLIDE, users will gain total control of power quality. POWERGLIDE features Watlow's innovative ATS technology and incorporates power conversion, a technology platform that regulates power up and down rather than on and off. In addition, POWERGLIDE incorporates an algorithm that uses temperature co-efficient of resistance (TCR) to measure temperature and provide control, which is a technology platform that converts every heater zone into a sensor, as well as ceramic protection algorithms.

POWERGLIDE offers several communication protocols including EtherCAT®, which is optimized for the semiconductor manufacturing industry.



Features and Benefits

Built-in automatic calibration algorithm

- Eliminates downtime associated with calibration

High TCR heater materials based temperature control

- Allows closed loop control for all zones

Incorporates ceramic control algorithms

- Maintains the limitations of the materials to protect the pedestal
- Provides programmable, state-based PID control

EtherCAT® communications protocol

- Ensures adherence to industry standard protocols

POWERGLIDE

Specifications

Line Voltage/Power
- 85 to 264VAC, 47 to 63Hz
- 20 to 28VAC, +10/-15%; 50/60Hz, ±5%
- 12 to 40VDC
- 10VA ($^{1}/_{32}$ and $^{1}/_{16}$ DIN)
- Data retention upon power failure via non-volatile memory
- Compliant SEMI F47-0200, Figure R1-1 voltage sag requirements @ 24VAC or higher

Environmental
- Operating temperature: 0 to 50°C
- Humidity: 5% to 95% RH non-condensing

Physical
- Dimensions: 9.0 in. L x 5.5 in. W x 4.0 in. T
- Weight: 6.15 lbs including heat sink
- Mounting: can be paired with a second unit to share heat sink fan, 4 #8 screws to a back plate

Power Outputs
- Quantity: Two, 1 per zone pedestal
- Output voltage: 0-208V rectified AC
- Output current: 30A (peak), 25A steady state max.
- Interlock relay: One, form A - 5A, 24V

Power Input
- Quantity: 2, 1 per zone, each zone isolated from the other
- Input voltage: 85 to 264VAC/DC

Electronics (Logic) Power
- 24VDC on DB9

Communications
- RS-485 on pair of DB9 with pass-through, Watlow standard bus protocol
- EtherCAT® supporting ETG.5003.2060
- USB device 2.0, Watlow standard bus protocol

Sensing Inputs
- 2 zones of thermocouple Type K for reference sensing
- Heater resistance 1 to 30 ohms via delivered I and V resolution 0.001Ω
- Heater measurement accuracy 0.01 ohms

Algorithms
- Inner and outer set points via two separate, independent control loops
- Control PV sources: Heater filament temperature via resistance, reference TC, wafer TC, chamber compensated filament temperature; can be changed while running
- Model based PID and rate control with 8 programmable control states
  - Power-up
  - Soft start
  - Rate control
  - PID control
  - Manual power
  - Remote power
  - Off
- 2 programmable transition conditions per state

Pedestal Protection Algorithms
- Zone to zone temperature difference reduction and safety shutdown
- Zone to reference temperature difference reduction and safety shutdown
- Over-temp shutdown
- Drives interlock relay
- Over-current shutdown
- Shorted output protection

Resistance to Temperature Methods
- Programmable base resistance and TCR
- 16 point offset table
- Auto-calibration to reference TC wafer (patent pending)

Agency Directive
- UL®/EN 61010-1 Safety Requirements for measurement, control and laboratory equipment

Silver Series EM

The Silver Series EM is a rugged, touch-screen operator interface terminal (OIT). Available in three sizes (4.3, 7 and 10 inch diagonal display sizes), the OIT's feature serial and Ethernet communications with multiple controllers, email messaging, universal serial bus (USB host), data logging, flexible password security and multiple languages. The small bezel size and two-inch depth make mounting in tight spots easy.

The Silver Series EM programming software, EZwarePlus, is easy to use and features a large variety of built-in screen objects that makes it powerful. When creating screens, the user can call upon extensive graphics libraries, import custom graphics and add numeric displays, entry fields, analog meters, bar graphs and trend graphs with just a few mouse clicks. Screen objects are highly customizable, and the user can create libraries of their own objects for repeat use. The online simulator, Ethernet and USB support make testing and downloading fast. The EZwarePlus screen editor is part of the EZwarePlus software suite and is available as a FREE download on www.watlow.com.

The Silver Series EM OIT paired with Watlow® controllers is the perfect solution for your industrial process or machine control application.

Features and Benefits

Bright, color, high resolution, graphic, touch screen, thin film transistor (TFT) display
- Maximizes display space in the OIT footprint
- Allows application specific interface design
- Allows viewing from a distance and at an angle
- Highlights important process information with color and animation

User selectable portrait or landscape operation
- Fits in tight spots

Ethernet, serial and USB host ports
- Allows options for connecting to controllers
- Provides options for downloading projects
- Expands memory for additional recipe and data log storage
- Supports barcode readers, keyboard, mouse and printers
- Supports monitoring from a personal computer (PC) with free virtual network computing (VNC) client software



Support for over 100 protocols, up to three simultaneously plus multiple protocols over Ethernet
- Connects to a wide range of industrial controllers and devices
- Integrates a variety of devices to simplify complex operation tasks

Data logging, display and trending
- Helps operators monitor processes
- Reduces labor and increases accuracy by automating time-stamped data collection
- Stores captured data for future retrieval in multiple files
- Saves time by exporting data to Excel®-compatible comma separated value (.csv) files
- Improves process understanding by allowing live and historical data to be viewed on the OIT

Alarm and event email notification, monitoring and recording
- Reduces downtime by helping troubleshoot equipment and processes
- Simplifies troubleshooting by recording time and date- stamped alarm and event history
- Organizes and prioritizes alarms and events in up to 255 categories and four priority levels

Recipe management
- Reduces errors by automating process setting changes

Offline and online simulation
- Speeds up development by making it faster and easier to test projects
- Allows faster creation of fine-tuned interfaces by speeding up iterations

Time or trigger-based data exchange
- Simplifies integration by allowing the OIT to copy data from one controller or OIT to another

Internal, piezoelectric buzzer
- Provides audible alarms and key chirp

Silver Series EM

Features and Benefits *(Continued)*

Two-year warranty
- Provides product support and reliability

Screen object password security with programmable hierarchy and multiple users
- Prevents errors and tampering by allowing only authorized users to access restricted items on the screen
- Allows flexible hierarchies by letting the developer assign each screen object to any of 12 groups and grant each user access to any combination of groups
- Provides password protection for upload, download and access to local setup
- Supports up to 127 users

Screen object invisibility and/or interlock control
- Prevents errors by guiding operators

Powerful, easy-to-use EZwarePlus programming software
- Requires only a small investment in time to create a useful interface
- Provides the ability to learn additional features as needed
- Provides advanced interface features such as animation and pop-up windows
- Reduces development time by providing extensive graphical libraries and facilitating reuse with user-created libraries
- Simplifies development allowing import of common graphic formats: bitmaps, JPEGs and animated GIFs

User-programmable macros with math functions and support for floating point
- Extends functionality
- Automates processes

TrueType fonts with Unicode (international) characters and language switching feature
- Makes screens easy to read by allowing bold, italic, underlined, scrolling and blinking text to direct operator's eyes
- Prevents errors by communicating with users in their native languages
- Reduces development and support by allowing inclusion of up to 24 user-selectable languages in a project

UL®, NEMA 4, CE, RoHS,
- Allows use in harsh industrial environments
- Assures prompt product acceptance



Integrate multiple devices to simplify operation of complex systems.



Include the types of displays users understand such as gauges, sliders and bar graphs to make screens intuitive.

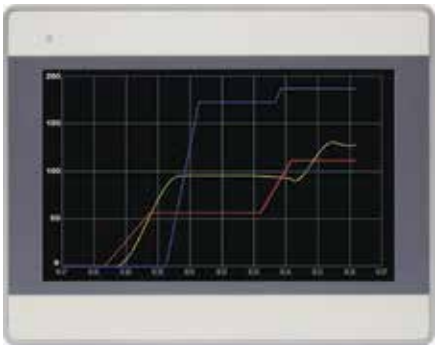

Log and graph process data for quality records and better process control.



Create screens that guide work flow.

Silver Series EM

Dimension and Connection Diagrams

Models TS00-0043-EM00/TS00-0043-EM0B

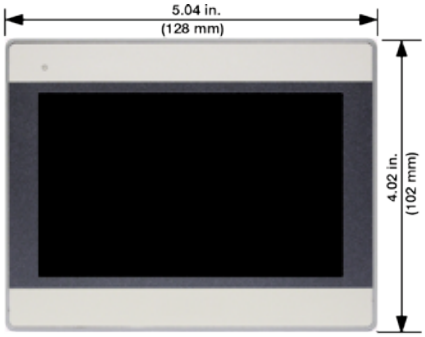

Front View

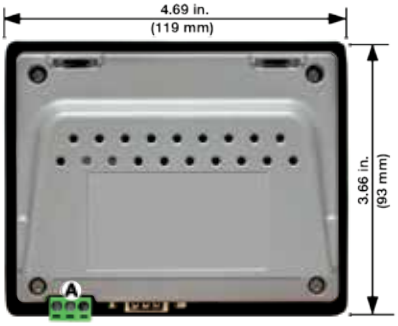

Rear View

A Power connector
B Serial ports
C USB host port
D Ethernet port



Bottom View

Model TS00-0070-EM00/TS00-0070-EM0B

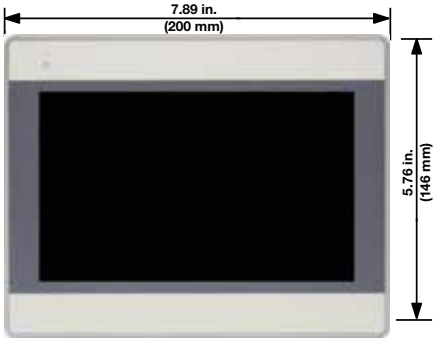

Front View

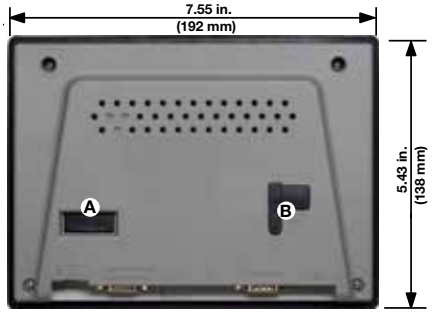

Rear View

A Fuse
B Switches and reset button
C Power connector
D Serial ports
E USB host port
F Ethernet port



Bottom View

Model TS00-0100-EM00

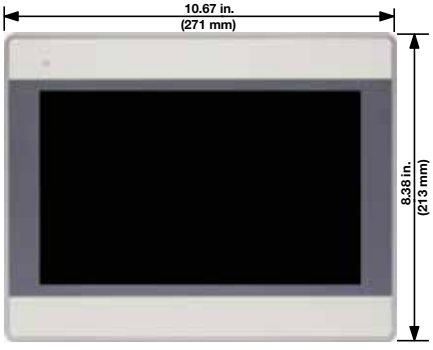

Front View

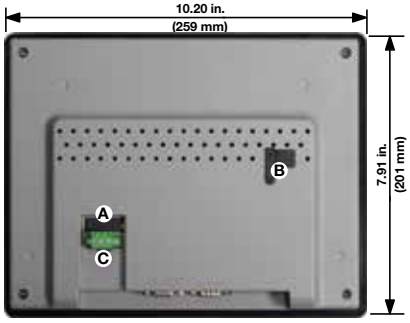

Rear View

A Fuse
B Switches and reset button
C Power connector
D Serial ports
E Ethernet port
F USB host port



Bottom View

Silver Series EM

	Model Number		
Feature	**TS00-0043-EM00/TS00-0043-EM0B**	**TS00-0070-EM00/TS00-0070-EM0B**	**TS00-0100-EM00**
Processor Type	600MHz, 32-bit, RISC, fanless		
Memory	128MB Flash, 128MB DRAM		
Ethernet Port	10/100 Base-T (RJ45)		
Serial Ports	COM1: RS-232 or RS-485 (2-wire or 4-wire) COM3: RS-485 (2-wire)		
USB Host (Type A) Version 2.0	1 each		
Real Time Clock	Built-in		
Audible Alarm and Key Chirp	Piezoelectric buzzer		
Display Type	TFT LCD		
Resolution (Pixels)	480 x 272	800 x 480	
Colors	16 million		262 thousand
LED Backlight Brightness	500 cd/m^2	350 cd/m^2	300 cd/m^2
Contrast Ratio	500:1		
Viewing Angle	Top: 50°, bottom, right, left: 70°	Top: 60°, bottom, right, left: 70°	Top: 45°, bottom, right, left: 65°
Backlight Longevity	30,000 hours		
Touch-Screen Type	4-wire analog resistive		
Touch-Screen Resolution	Continuous		
Touch-Screen Light Transmission	Greater than 80%		
Touch-Screen Lifespan	1,000,000 activations min.		
Operating Temperature	32 to 122°F (0 to 50°C)		
Storage Temperature	-4 to 140°F (-20 to 60°C)		
Relative Humidity	10 to 90% @ 40°C (non-condensing)		
Operating Shock Resistance	10 to 25Hz (X, Y, Z direction 2G, 30 min.)		
Environmental Ratings	NEMA 4 (IP65) indoor only		
Agency	CE, cULus, RoHS	Class 1, Division 2, CE, cULus, RoHS	CE, cULus, RoHS
Enclosure	Plastic molded		
Mounting	Panel		
Dimensions Cutout (W x H)	4.69 x 3.66 in. (119 x 93 mm)	7.55 x 5.43 in. (192 x 138 mm)	10.20 x 7.91 in. (259 x 201 mm)
Dimensions Overall (W x H x D)	5.04 x 4.02 x 1.26 in. (128 x 102 x 32 mm)	7.88 x 5.76 x 1.34 in. (200 x 146 x 34 mm)	10.67 x 8.38 x 1.57 in. (271 x 213 x 40 mm)
Weight	0.55 lbs (0.25 kg)	1.31 lbs (0.6 kg)	2.9 lbs (1.3 kg)
Input Power: Voltage	24VDC		
Input Power: Current	300mA max.	350mA max.	400mA max.

EZwarePlus Software System Requirements

Compatible Operating Systems:

- Windows® 10, 8.1 and 7

Silver Series EM

EZwarePlus Software Suite

The EZwarePlus software suite includes EasyConverter, EZwarePlus screen editor, utility Manager and Recipe Editor programs.



Utility Manager uploads and downloads projects to and from the Silver Series EM OIT, opens compiled projects in simulation and launches the other EZwarePlus programs.

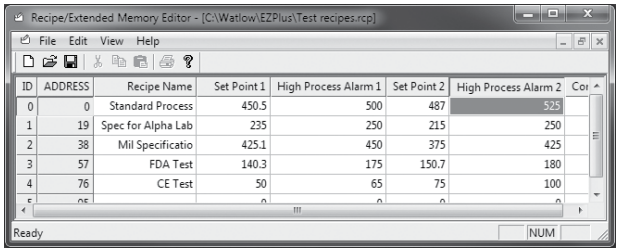

The Recipe Editor configures memory files for use with Silver Series EM OITs and allows offline creation of recipes.

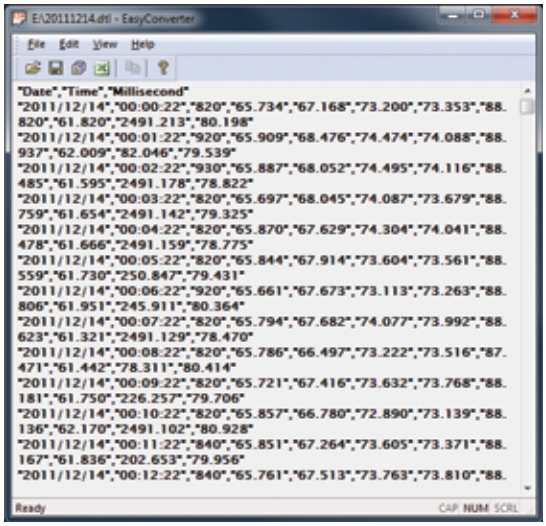

EasyConverter converts log files saved by the Silver Series EM OIT to file formats used by popular Windows® software such as Microsoft® Excel®.

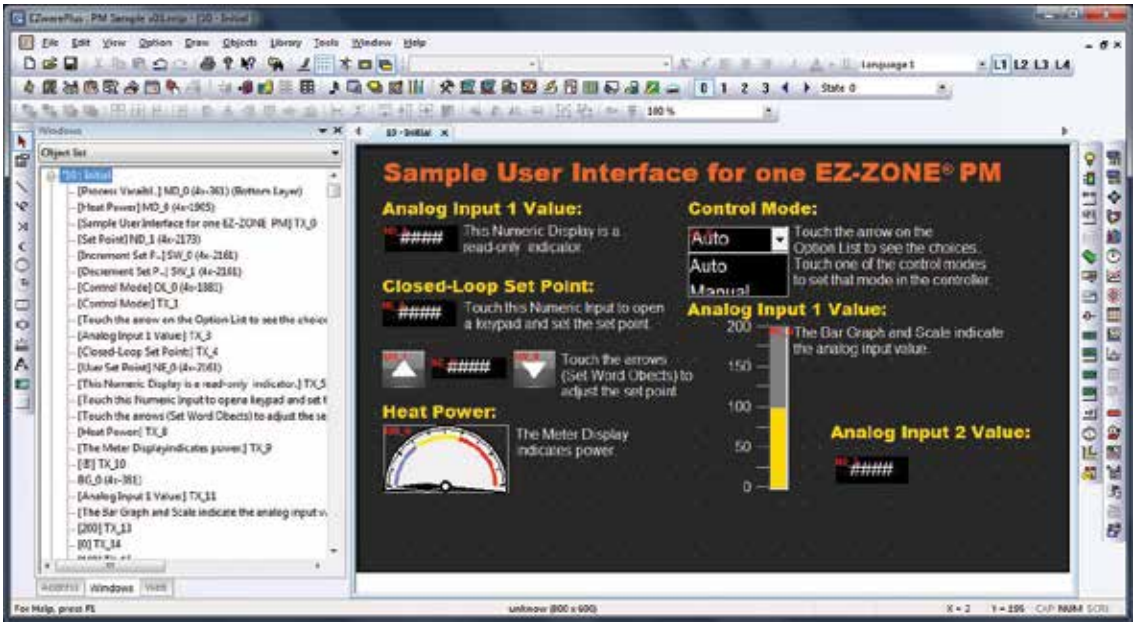

EZwarePlus provides a graphical screen designing environment with point-and-click access to features and drag-and-drop ease.

Silver Series EM

Connectivity

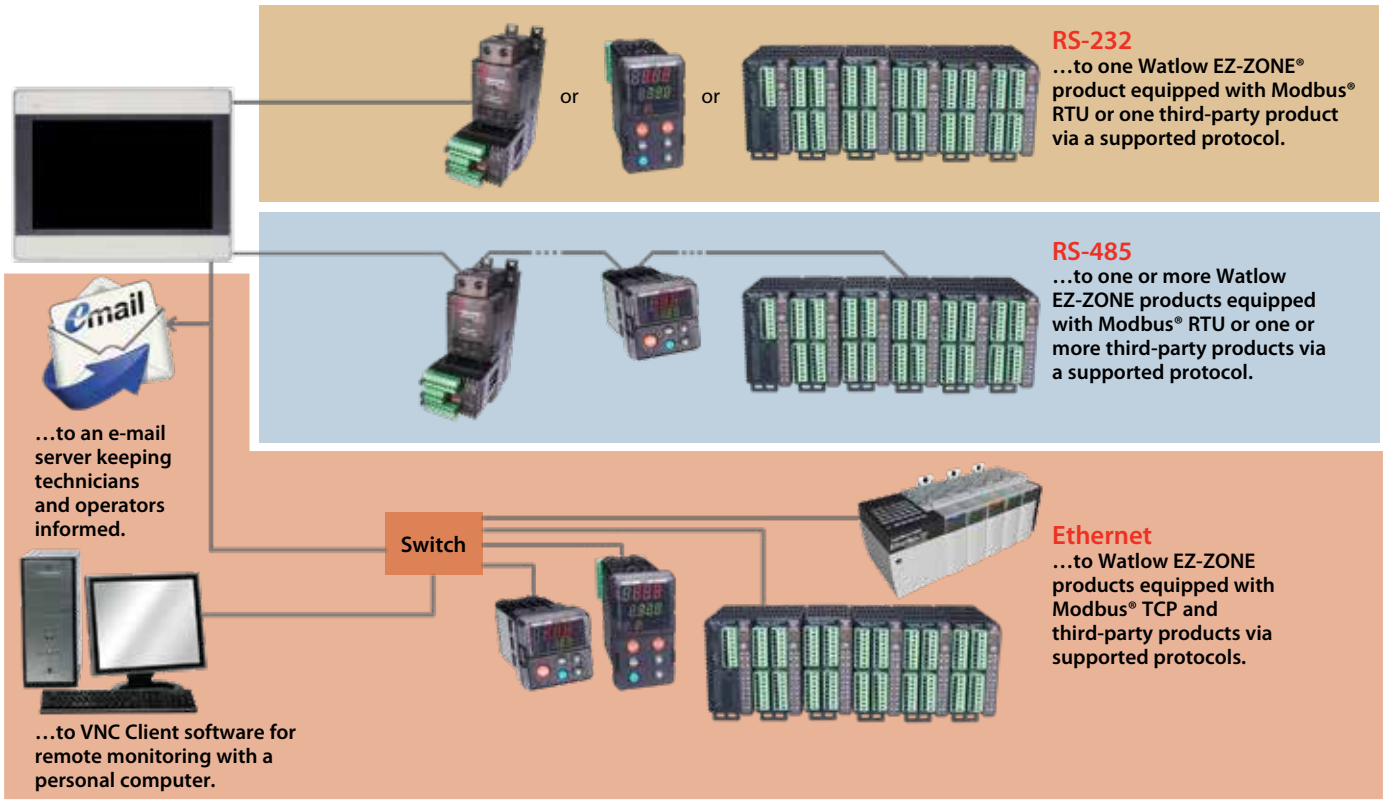

Ordering Information

Part Number	Description
TS00-0043-EM00	4.3 in. (480 x 272) color TFT LCD touch screen; two-tone, light gray bezel; USB host; two serial ports and Ethernet
TS00-0043-EM0B	4.3 in. (480 x 272) color TFT LCD touch screen; two-tone, dark gray bezel; USB host; two serial ports and Ethernet
TS00-0070-EM00	7 in. (800 x 480) color TFT LCD touch screen; two-tone, light gray bezel; USB host; two serial ports and Ethernet
TS00-0070-EM0B	7 in. (800 x 480) color TFT LCD touch screen; two-tone, dark gray bezel; USB host; two serial ports and Ethernet
TS00-0100-EM00	10 in. (800 x 480) color TFT LCD touch screen; two-tone, light gray bezel; USB host; two serial ports and Ethernet

Accessories

Part Number	Description
0601-0001-0000	Controller support tools DVD-ROM with programming software and product manuals
0830-0750-0000	Power supply, Input: 85-264VAC, Output: 24VDC, 1.7A, 40W (not Class 2)
0847-0299-0000	Class 2 power supply, Input: 90-264VAC, Output: 24VDC, 1.3A, 31W
0219-0388-0000	TS00-0043-EM00 and TS00-0043-EM0B communication cable, 5-foot, COM1 (RS-485, 2-wire) to bare wires for Watlow EZ-ZONE controller screw terminals
0219-0374-0000	TS00-0070-EM00, TS00-0070-EM0B or TS00-0100-EM00 communication cable, 5-foot, COM1 (RS-485, 2-wire) to bare wires for Watlow EZ-ZONE controller screw terminals
0830-0782-0000	Package of 5 ea. protective screen covers for the TS00-0043-EM00 and TS00-0043-EM0B
0830-0753-0000	Package of 5 ea. protective screen covers for the TS00-0070-EM00 and TS00-0070-EM0B
0830-0754-0000	Package of 3 ea. protective screen covers for the TS00-0100-EM00

How To Use This Index

This easy-to-use cross reference contains the alpha or numeric prefixes for all Watlow® product part numbers contained in this catalog. The spaces (_) shown in some of the following prefixes indicate additional characters.

Part Number	Description	Page Number
0004-0286_	Current Transformers	342
0216_	Panel Mount Adapter Plates	343
0219-037_	Silver Series – Splitter Adapter and Communication Cables	303
0219-0382_	Silver Series – USB Cables	303
0219-0388_	Silver Series – Communication Cables	303
080_	Noise Suppression Devices	343
0802-0266_	MOV, 275VAC, 15 Joule	343
0802-0273_	MOV, 150VAC, 20 Joule	343
0804-0147_	QUENCHARC® (250VAC max.)	343
0808-0096_	DIN-A-MITE® D - Replacement Semiconductor Fuses	266
0830-07_	Silver Series – Protective Screen Covers	303
0830-0750_	Silver Series – Power Supply	303
0847-0299_	Power Supply	303, 345, 379
0847-030_	Power Supply	345
0847-0326_	Communication Adapters – USB to 485, Screw Terminals	337
0847-0400_	Communication Adapters – USB to Ethernet, RJ45	337
10D_	Adjustable Spring Thermocouple, 6 in. Spring	28
110_	Coated Protection Tubes	92
11D_	Adjustable Spring Thermocouple, 12 in. Spring	28
12D_	Adjustable Armor Thermocouple	29
14-00_	DIN-A-MITE – CE Filters	343
16_	Current Transformers	342
17-5_	Fuse Holders	254, 257, 262
17-8_	Fuses	
20_	Rigid Sheath Thermocouple, Straight	30
21_	Rigid Sheath Thermocouple, 90° Bend	30
22_	Rigid Sheath Thermocouple, 90° Bend	30
23_	Rigid Sheath with Threaded Fitting Thermocouple, 1/8 in.	31
24_	Rigid Sheath with Threaded Fitting Thermocouple, 3/16 in.	31
25_	Flange Thermocouples	32
265_	SERIES EHG® SL10 Controllers	232
30_	7/16 in. Rigid Sheath Thermocouple, Straight	33
31_	7/16 in. Rigid Sheath Thermocouple, 45° Bend	33
32_	7/16 in. Rigid Sheath Thermocouple, 90° Bend	33
40_	Large Diameter Rigid Sheath Thermocouple, Straight	34
401_	XACTPAK® Cable, Alloy 600	158
402_	XACTPAK Cable, 304 SS	158
404_	XACTPAK Cable, 316 SS	158
41_	Large Diameter Rigid Sheath Thermocouple, Straight	34
42_	Large Diameter Rigid Sheath Thermocouple, Straight	34
505_	Terminal Blocks	100

Part Number Index

Part Number	Description	Page Number
5750_	SERIES 5750 Transmitters	104
59_	SERIES 5950 Transmitters	107
60_	Flexible Extensions Thermocouples	35
61_	SERIES 61 Insulated Wire Thermocouples	36
62_	SERIES 62 Insulated Wire Thermocouples	36
6556_	Adjustable Spring-Loaded Hex Fitting	84
65D_	PFA Encapsulated Thermocouple, 3⁄16 in. Diameter	37
65E_	PFA Encapsulated Thermocouple, ¼ in. Diameter	37
709_	Standard Thermocouple Connection Heads	100
70X_	Ring Terminal Thermocouples	38
71_	Nozzle Thermocouples	39
713	Grommots	97
72_	Pipe Clamp Thermocouples	40
73_	Grommet Thermocouples	41
74_	Brass Shim Thermocouples	42
75_	Stainless Steel Shim Thermocouples	43
807_	Three-Pole Connectors, Cable Clamp	96
91_	High-Temperature Connector, Ceramic	96
92_	High-Temperature Connector, Adapter for Plug or Jack	96
943_	Weather Resistant Boots	99
AB_	Cut and Stripped Thermocouples	49
AC_	Plug or Jack Termination Thermocouples	50
AF_	Metal Transitions with Spring Strain Relief Thermocouples	52
AQ_	Miniature Transitions Thermocouples	53
AR_	Connection Heads Thermocouples	54
AT_	For Use with Thermowells Thermocouples	55
AW_	Multipoint Sensor Thermocouples	66
CF_	SERIES CF Controllers	237
CV_	SERIES CV Controllers	240
DA_	DIN-A-MITE A Power Switching Devices	254
DB_	DIN-A-MITE B Power Switching Devices	257
DC_	DIN-A-MITE C Power Switching Devices	263
DD_	DIN-A-MITE D Power Switching Devices	266
DT	ASPYRE® Power Switching Device	251
D4T	D4T Data Logger	294
E_ _ _304	Fiberglass Braided Thermocouple and Extension Wire SERIES 304, Type E	121
E_ _ _305	Fiberglass Wrapped Thermocouple and Extension Wire SERIES 305, Type E	123
E_ _ _502	PVC Insulated Extension Wire SERIES 502, Type E	127
E_ _ _507	FEP Insulated Thermocouple and Extension Wire SERIES 507, Type E	131
E_ _ _508	TFE Insulated SERIES 508, Type E	133
E_ _ _509	FEP Insulated and Shielded Thermocouple and Extension Wire SERIES 509, Type E	135

Part Number Index

Part Number	Description	Page Number
E_ _ _510	PVC Insulated and Shielded Thermocouple and Extension Wire SERIES 510, Type E	137
E_ _ _511	Polyimide Insulated SERIES 511	139
E_ _ _512	Polyimide Insulated SERIES 512, Type E	141
E_ _ _516	PFA Insulated Thermocouple and Extension Wire SERIES 516, Type E	143
EZK_	EZ-ZONE® RUI and Gateway	307
F4T_	F4T	351
FM_	Flex Module	353, 355, 356, 357
HD_	ENVIROSEAL™ HD Sensor	80
J_ _ _304	Fiberglass Braided Thermocouple and Extension Wire SERIES 304, Type J	121
J_ _ _305	Fiberglass Wrapped Thermocouple and Extension Wire SERIES 305, Type J	123
J_ _ _314	High-Temperature Fiberglass Twisted Thermocouple Wire SERIES 314, Type J	125
J_ _ _321	High-Temperature Braided Fiberglass Thermocouple Wire, SERIES 321, Type J	126
J_ _ _502	PVC Insulated Extension Wire SERIES 502, Type J	127
J_ _ _505	PVC Insulated “RIPCORD” SERIES 505, Type J	129
J_ _ _506	Small Gauge FEP Insulated SERIES 506, Type J	130
J_ _ _507	FEP Insulated Thermocouple and Extension Wire SERIES 507, Type J	131
J_ _ _508	TFE Insulated SERIES 508, Type J	133
J_ _ _509	FEP Insulated and Shielded Thermocouple and Extension Wire SERIES 509, Type J	135
J_ _ _510	PVC Insulated and Shielded Thermocouple and Extension Wire SERIES 510, Type J	137
J_ _ _511	Polyimide Insulated and Twisted SERIES 511, Type J	139
J_ _ _512	Polyimide Insulated SERIES 512, Type J	141
J_ _ _516	PFA Insulated Thermocouple and Extension Wire SERIES 516, Type J	143
K_ _ _304	Fiberglass Braided Thermocouple and Extension Wire SERIES 304, Type K	121
K_ _ _305	Fiberglass Wrapped Thermocouple and Extension Wire SERIES 305, Type K	123
K_ _ _314	High-Temperature Fiberglass Twisted Thermocouple Wire SERIES 314, Type K	125
K_ _ _321	High-Temperature Braided Fiberglass Thermocouple Wire, SERIES 321, Type K	126
K_ _ _502	PVC Insulated Extension Wire SERIES 502, Type K	127
K_ _ _505	PVC Insulated “RIPCORD” SERIES 505, Type K	129
K_ _ _506	Small Gauge FEP Insulated SERIES 506, Type K	130
K_ _ _507	FEP Insulated Thermocouple and Extension Wire SERIES 507, Type K	131
K_ _ _508	TFE Insulated SERIES 508, Type K	133
K_ _ _509	FEP Insulated and Shielded Thermocouple and Extension Wire SERIES 509, Type K	135
K_ _ _510	PVC Insulated and Shielded Thermocouple and Extension Wire SERIES 510, Type K	137
K_ _ _511	Polyimide Insulated and Twisted SERIES 511, Type K	139
K_ _ _512	Polyimide Insulated SERIES 512, Type K	141
K_ _ _516	PFA Insulated Thermocouple and Extension Wire SERIES 516, Type K	143
LF_	SERIES LF Limit Controllers	284
LS_	SERIES LS Safety Limit Controllers	289
LV_	SERIES LV Limit Controllers	287
MC	Miniature Thermocouple Connector System	97
MCC_	MICROCOIL™ Thermocouple, Copper Tip	60
MCF_	Miniature Thermocouple Connector, Female	97
MCM_	Miniature Thermocouple Connector, Male	97

Part Number Index

Part Number	Description	Page Number
MCN_	MICROCOIL Thermocouple, Aluminum Nitride	60
MHX_	Criimp/Braze Adapter	97
OK_	Polyimide Bracket Style Thermocouples	44
PM	EZ-ZONE PM Controllers	275
PM3_	EZ-ZONE PM 1/32 DIN Controllers	275
PM6_	EZ-ZONE PM 1/16 DIN Controllers	275
PT_	PT Polypropylene Head and Connector Blocks	101
RB_	Standard Industrial Insulated Leads RTDs	72
RC_	Plug or Jack Termination RTDs	73
RF_	Metal Transitions RTDs	74
RMA_	EZ-ZONE RM Access Modules	196
RMC_	EZ-ZONE RM Control Modules	184
RME_	EZ-ZONE RM Expansion Modules	191
RMH_	EZ-ZONE RM High-Density Control Modules	187
RML_	EZ-ZONE RM High-Density Limit Modules	189
RMS_	EZ-ZONE High-Density Scanner Modules	193
RR_	Head Connection/Optional Transmitter RTDs	75
RT_	For Use with Thermowells RTDs	76
RT_ _ _ _701	RTD Lead Wire SERIES 701, PVC	147
RT_ _ _ _704	RTD Lead Wire SERIES 704, FEP	147
RT_ _ _ _705	RTD Lead Wire SERIES 705 Fiberglass	147
RT_ _ _ _707	RTD Lead Wire SERIES 707, PFA	147
RT2_	RTD Lead Wire, Type 2	145
RT3_	RTD Lead Wire, Type 3	145
RT-30_	PT Polypropylene Head and Connector Blocks	101
RT4_	RTD Lead Wire, Type 4	145
S_	Specialty RTD or Thermistors	79
S_ _ _304	Fiberglass Braided Thermocouple and Extension Wire SERIES 304, Type S	122
S_ _ _305	Fiberglass Wrapped Thermocouple and Extension Wire SERIES 305, Type S	124
S_ _ _502	PVC Insulated Extension Wire SERIES 502, Type S	128
S_ _ _505	PVC Insulated “RIPCORD” SERIES 505	129
S_ _ _506	Small Gauge FEP Insulated SERIES 506, Type S	130
S_ _ _507	FEP Insulated Thermocouple and Extension Wire SERIES 507, Type S	132
S_ _ _508	TFE Insulated SERIES 508	134
S_ _ _509	FEP Insulated and Shielded Thermocouple and Extension Wire SERIES 509	136
S_ _ _511	Polyimide Insulated and Twisted SERIES 511	140
S_ _ _512	Polyimide Insulated SERIES 512	142

Part Number Index

Part Number	Description	Page Number
S_ _ _510	PVC Insulated and Shielded Thermocouple and Extension Wire SERIES 510, Type S	138
S_ _ _516	PFA Insulated Thermocouple and Extension Wire SERIES 516, Type S	144
SAB_	Crimp/Brass Style Connectors	94
SAC_	Cable Clamp Style Connectors	94
SC_	S SERIES Connectors	94
SK_	Quick-Attach Thermocouple Connectors	95
SKP_	Single Panel Mount Hardware Connectors	99
SSR_	Solid State Relay Power Switching Devices	270
ST_	EZ-ZONE ST Controllers	227
T_ _ _304	Fiberglass Braided Thermocouple and Extension Wire SERIES 304, Type T	122
T_ _ _305	Fiberglass Wrapped Thermocouple and Extension Wire SERIES 305, Type T	124
T_ _ _502	PVC Insulated Extension Wire SERIES 502, Type T	128
T_ _ _505	PVC Insulated “RIPCORD” SERIES 505, Type T	129
T_ _ _506	Small Gauge FEP Insulated SERIES 506, Type T	130
T_ _ _507	FEP Insulated Thermocouple and Extension Wire SERIES 507, Type T	132
T_ _ _508	TFE Insulated SERIES 508, Type T	134
T_ _ _509	FEP Insulated and Shielded Thermocouple and Extension Wire SERIES 509, Type T	136
T_ _ _510	PVC Insulated and Shielded Thermocouple and Extension Wire SERIES 510, Type T	138
T_ _ _511	Polyimide Insulated and Twisted SERIES 511, Type T	140
T_ _ _512	Polyimide Insulated SERIES 512, Type T	142
T_ _ _516	PFA Insulated Thermocouple and Extension Wire SERIES 516, Type T	144
TBD_	Bimetallic Thermometer Wells-Threaded Thermowells	90
TH-185_	Brass Compression Fitting, Non-Adjustable	83
TH-2745_	Stainless Steel Compression Fitting, Non-Adjustable	83
TH-2747_	Stainless Steel Adjustable Compression Fitting, 1¼ in.	84
TH-2748_	Stainless Steel Adjustable Compression Fitting, 2 7/16 in.	84
TH-2760_	Fixed Bayonet Fittings	85
TH-2762_	Adjustable Bayonet Compression Fittings	85
TH-279_	Stainless Steel Adjustable Compression Fitting Replacement Sealant Gland, 1¼ in.	84
TH-280_	Stainless Steel Adjustable Compression Fitting, Replacement Sealant Gland 2 7/16 in.	84
TH-295_	Bayonet Adapter Fitting, ⅛ NPT Thread	85
TH-298_	Bayonet Adapter Fitting, ⅜-24 SAE Thread	85
TH-3_	Three-Pole Connectors	96
TR_	Radio Frequency Thermocouples	62
TS_	Silver Series EM	303
TST_	TRUE SURFACE Thermocouples	64, 91
TST_	Socket Weld Thermowells	88
TT_	Threaded Type Thermowells	89
XP_	Explosion Proof Thermocouple Connection Heads	101
Z100-0815-_	Solid State Relays — Heat Sinks	270

Product Category Index

Product Category	Page Number
Accessories - Controllers	337
Accessories - Sensors	82
Arc Suppression	343
ASPYRE®	245
ASPYRE® Configurator	314
Basic and Limit Controllers	238, 235, 282, 285, 288
Communication Adapters	337
Connection Heads and Blocks	100
Connectors	93
Control Panels	327
Current Transformers	342
Data Loggers	290
DIN-A-MITE® A	252
DIN-A-MITE B	255
DIN-A-MITE C	258
DIN-A-MITE D	264
EHG SL10 Software	319
EMI Filters	343
ENVIROSEAL™ HD Sensor	80
EXACTSENSE® Thermocouple	56
Extension Wire	113
EZ-LINK Mobile App	312
EZwarePlus Software	325
EZ-ZONE® Configurator	315
EZ-ZONE GSD Editor	318
EZ-ZONE LabVIEW™ Driver	317
EZ-ZONE RM Controllers	179
EZ-ZONE RM High-Density Limit Modules	278
EZ-ZONE RM High-Density Scanner Modules	280
EZ-ZONE RUI and Gateway	304
EZ-ZONE ST Controllers	222
Fittings	48, 69
Fuses and Fuse Holders	341
General Applications Tube and Wire	26
Indicators	298
Limits	271

Product Category	Page Number
MICROCOIL™ Thermocouples	59
Mineral Insulated (MI) Thermocouples	45
Mineral Insulated Cable	148
Multipoint Thermocouples	65
Operator Interface Terminals	298
Panel Mount Adapter Plates	343
PM LEGACY	214
PM PLUS	206
Power Controllers	245
Power Supplies	245
Power Switching Devices	245
Protection Tubes	92
Radio Frequency Thermocouples	61
Remote User Interface (RUI)	304
Resistance Temperature Sensors	67
RTDs	68
RTD Lead Wire	145
RUIs	304
S SERIES Connectors	94
Scanners	271
SERIES 5750 Transmitters	102
SERIES 5950 Transmitters	105
SERIES CF Controllers	235
SERIES CV Controllers	238
SERIES EHG SL10 Software	319
SERIES LF Limits	282
SERIES LS Safety Limits	288
SERIES LV Limits	285
SERV-RITE Wire	112
Silver Series EM	298
Software	310
Solid State Relays (SSR)	267
SpecView SCADA Software	320
Temperature and Process Controllers	163
Thermocouples	17
Thermocouple and Extension Wire	112
Thermowells	87
Transmitters	102
TRUE SURFACE Thermocouple (TST)	63
XACTPAK® Cable	149

Terms and Conditions of Sale

Quantity:
Products purchased and sold hereunder shall be those for which buyer submits an order which is accepted by Watlow Electric Manufacturing Company and any of its subsidiaries or affiliates that is a party to any related purchase order (collectively, "Watlow"). Watlow will deliver the ordered quantity specified, provided that Watlow shall have the right to manufacture, deliver and invoice for partial deliveries of products.

Delivery:
Incoterms® CPT, Customer's Delivery Location. Risk of loss and title passes to buyer when the goods are placed on the first means of transportation. Watlow shall select the means of transportation and prepay freight. For export shipments, buyer shall be responsible for customs clearance, duties, import VAT or GST when applicable. Under any agreed Incoterms® Watlow will file electronic export information. Watlow may designate the locations from which buyer may receive or pick up products.

Payment Terms:
Terms are net 30 days from date of invoice with approved credit. All quotations are valid for 30 days unless otherwise stated. Buyer shall not, and acknowledges that it will have no right to, withhold, offset, recoup or debit any amounts owed (or to become due and owing) to Watlow or any of Watlow's affiliates, whether relating to these terms and conditions and the parties' performance hereunder or any breach or non-performance of any other agreement between buyer and Watlow or any affiliate thereof.

Price Revision:
Prices are subject to change by Watlow without advance notice to buyer. If Watlow desires to revise the discounts, prices, points of delivery, service allowances or terms of payment but is restricted to any extent against so doing by reason of any governmental request, law, regulation, order or action, or if the discounts, prices, points of delivery, service allowances or terms of payment then in effect are altered by reason of governmental request, law, regulation, order or action, Watlow shall have the right (i) to terminate this order by notice to buyer, (ii) to suspend deliveries for the duration of such restriction or alteration, or (iii) to have applied to this order (as of the effective date of such restriction or alteration) any discounts, prices, points of delivery, service allowances or terms of payment governmentally acceptable. Any delivery suspended under this section may be canceled without liability.

Materials, Processes, and Part Numbers:
Watlow reserves the right, at any time and at its sole and absolute discretion, to make alterations to manufacturing, design, or other processes and/or changes to materials used in the manufacturing of its Standard Products (as hereinafter defined) without providing any prior notice thereof to buyer or otherwise incurring any obligations to buyer. In addition to the foregoing, the applicable part number for each product sold hereunder is subject to change by Watlow at its sole and absolute discretion without providing notice thereof to buyer. For purposes of these terms and conditions, the term "Standard Products" means those Watlow products, including but not limited to, heaters, controllers, control panels, sensors and accessories, which are included in Watlow's standard catalogue.

Return Policy:
Generally, all sales of Watlow products are considered final. Requests for returns must be made in writing within sixty (60) days immediately following the date which product arrived at the applicable location. All such requests will be reviewed and require written authorization. Generally, only stock products that have not be used or modified will be authorized for return and under no circumstances shall controllers be returned if the packaging seal is broken. Authorized returns will be subject to a $50 minimum or a thirty-five percent (35%) handling fee, whichever is greater. Authorized returns must be shipped freight prepaid at buyer's expense and be accompanied by an RMA. Products returned without an RMA will not be processed.

Order Changes:
Requested changes in the quantity, drawings, designs or specifications for products that have been ordered by buyer pursuant to an accepted purchase order, will only be binding upon Watlow if such changes are expressly accepted by Watlow in writing. Any such proposed changes are subject to the written agreement by Watlow and may cause an adjustment to the price, delivery schedule, or other commercial terms applied thereto. After receipt of such notice, Watlow will inform buyer of any adjustments to be made in price, delivery schedules, etc. resulting from buyer's requested changes prior to incorporating requested changes into manufactured products. If Watlow accepts a request by Buyer to extend the delivery date for finished products, Buyer shall pay to Watlow an additional daily stocking fee equal to at least two percent (2%) of the applicable purchase order per month, unless otherwise agreed by the parties. In the event that buyer and Watlow are unable to agree to the applicable adjustments in price, delivery, schedule, etc., such requested changes shall be deemed to be an order cancellation by buyer and buyer shall be responsible to Watlow for the expenses required herein.

Order Cancellations:
Buyer may cancel all or any portion of a purchase order for the products by delivering not less than sixty (60) days' prior written notice thereof to Watlow. If any purchase order is so cancelled by buyer, buyer shall pay to Watlow: (a) the price for all products that are produced and finished as of the date that Watlow receives such cancellation notice ("Cancellation Notice"); (b) the direct cost to Watlow for any work-in-progress in respect of such purchase order as of the date that Watlow receives such Cancellation Notice plus a handling and stocking charge equal to fifteen percent (15%) of such costs; and (c) any third party restocking or cancellation charges incurred by Watlow due to such order cancellation.

Freight and Taxes:
Prices do not include prepaid freight, federal, state or local taxes. Any increase in freight rates paid by Watlow on deliveries covered by this order and hereafter becoming effective and any tax or governmental charge or increase in same (excluding any franchise or income tax or other tax or charge based on income) (i) increasing the cost to Watlow of producing, selling or delivering products or of procuring products used therein or, (ii) payable by Watlow because of the production, sale or delivery of products, such as Sales Tax, Use Tax, Retailer's Occupational Tax, Gross Receipts Tax, Value Added Tax (VAT), and Ways Fees may, at Watlow's option, be added to the prices herein specified and be added to invoices.

Engineering Charge:
On complex products, systems or controller software modifications, an engineering charge may be applied or included in the price of prototypes. This charge is not subject to discounts.

Tooling:
All tooling and fixtures are the property of Watlow. Watlow will accept buyer's special tooling if sent freight prepaid. Watlow will maintain this tooling, exercising reasonable care, in order to produce buyer's products. Permanent molds for aluminum cast-in and polymer products shall be the property and responsibility of buyer.

Excuse of Performance:
Deliveries of product may be suspended by Watlow in the event of: (a) war, riot, terrorism, an act of God, fire, explosion, accident, flood, hurricane, sabotage; (b) a lack of adequate fuel, power, raw materials, labor, containers or transportation facilities; (c) compliance with governmental requests, laws, regulations, orders or actions; (d) breakage or failure of machinery or apparatus; (e) national defense requirements; (f) labor trouble, strike, lockout or injunction (provided that Watlow shall not be required to settle a labor dispute or accede to the demands of employees that it considers in its own business judgment to be contrary to its interests);or (g) any other event, beyond the reasonable control of Watlow, whether or not foreseeable or of the class or kind enumerated herein, which event makes impracticable the manufacture or transportation of the product or of a material upon which the manufacture of the product is dependent (each, a "Force Majeure Event"). Upon a Force Majeure Event, Watlow shall send written notice to buyer setting forth a brief description of the Force Majeure Event and an estimate, to the extent reasonably ascertainable, of the anticipated duration thereof. The foregoing notice requirement shall be satisfied by written notice given at such time as it shall become clearly apparent in the reasonable judgment of Watlow that performance has been materially diminished by such Force Majeure Event. If Watlow determines that its ability to supply the total demand for the product, or obtain any or a sufficient quantity of any material used directly or indirectly in the manufacture of the product, is hindered, limited or made impracticable due to a Force Majeure Event, Watlow may allocate its available supply of the product or such material (without obligation to

acquire other supplies of any such products or material) among itself and its purchasers, including purchasers that are not currently under contract, on such basis as Watlow determines to be equitable without liability for any failure of performance which may result therefrom. Deliveries suspended or not made by reason of this section shall be cancelled without liability, but these terms and conditions shall otherwise remain unaffected.

Warranty and Limitation of Liability:

Watlow warrants that its products will be free from defects in materials or workmanship for a period of twelve (12) months, and for controllers purchased hereunder, for a period of thirty-six (36) months, from the date of shipment of the products by Watlow (such period, the "Warranty Period"). This warranty does not extend to any losses or damages due to misuse, contamination, accident, neglect, normal wear and tear, negligence, unauthorized modification or alteration, improper installation or maintenance, misapplication, improper specification or operational conditions beyond Watlow's knowledge or control. Any product that does not comply with the foregoing warranty is hereinafter referred to as a "Nonconforming Product." Should any product fail during the Warranty Period, the root cause of which is noncompliance with the warranty requirements set forth in this paragraph, then Watlow shall, at its option and as buyer's sole and exclusive remedy for any warranty claim hereunder, either repair, provide a free replacement, or refund or grant a credit to buyer for the price for such Nonconforming Product. Buyer shall notify Watlow during the Warranty Period of the alleged failure of a product through Watlow's Returned Merchandise Authorization ("RMA") process within thirty (30) days after such failure. Advanced authorization for any repair or replacement undertaken by Buyer must be obtained in writing from Watlow. Notwithstanding the foregoing, Watlow's warranty with respect to implant refurbishment services performed by Watlow and the resulting refurbished disks (collectively, "Refurbished Disks and Services") shall not become effective until such time as Watlow has received payment in full for the Refurbished Disks and Services that are subject to any warranty claim hereunder and the duration of such warranty shall be twelve (12) months to the extent such claim relates to mechanical performance and six (6) months to the extent such claim relates to elastomer, particle performance and si coating.

In the event that Watlow is selling software programs hereunder, Watlow warrants that for a period of twelve (12) months from the date of shipment of such software program ("Software") to buyer by Watlow (if applicable), when the Software is used in accordance with the instructions therefor, the Software shall be free from material defects, provided that buyer has implemented any applicable upgrades, fixes or corrections that Watlow may make available from time to time. Watlow does not warrant that the Software will be error free or virus free, will function without interruption, or will meet any specific business need of buyer. Watlow will, at its own expense and as its sole obligation and buyer's exclusive remedy for any breach of this warranty, use commercially reasonable efforts to correct any material defect, provided that such material defect is reproducible, buyer provides Watlow with prompt written notice thereof upon its discovery, and buyer cooperates with Watlow's reasonable requests and instructions for correcting such material defect. Notwithstanding the foregoing, in no event shall Watlow have any obligation or liability for any claim or defect arising out of or resulting in whole or in part from: (i) misuse of the Software by Buyer or its employees, agents and representatives; (ii) modifications to the Software not made by Watlow; (iii) combination of the Software with hardware or software not supplied by Watlow or use of the Software as part of a non-Watlow method or system; or (iv) the specific data input, processed or stored in connection with the use of the Software by Buyer or its employees, agents and representatives. THE LIMITED WARRANTIES SET FORTH IN THIS SECTION ARE THE SOLE AND EXCLUSIVE WARRANTIES MADE BY WATLOW AND ARE IN LIEU OF AND EXCLUDE ALL OTHER REPRESENTATIONS OR WARRANTIES OF ANY KIND, EXPRESS OR IMPLIED, ARISING BY OPERATION OF LAW, CUSTOM, CONDUCT, USAGE OF TRADE OR OTHERWISE, INCLUDING WITHOUT LIMITATION, WARRANTIES AS TO MERCHANTABILITY OR FITNESS FOR PARTICULAR PURPOSE, NON-INFRINGEMENT OF THIRD-PARTY RIGHTS, RESULTS OR EFFORTS. NO EMPLOYEE, AGENT OR AFFILIATE OF WATLOW HAS AUTHORITY TO BIND WATLOW TO ANY REPRESENTATIONS OR WARRANTIES, ORAL OR WRITTEN, NOT EXPRESSLY CONTAINED IN THIS AGREEMENT, AND ANY SUCH PURPORTED REPRESENTATIONS OR WARRANTIES SHALL NOT BE ENFORCEABLE. THE REMEDIES OF BUYER PROVIDED HEREIN ARE THE SOLE AND EXCLUSIVE REMEDIES FOR BREACH OF THE WARRANTY CONTAINED HEREIN.

If buyer orders and/or Watlow delivers a product designated as a "Prototype", no guarantees, warranties or representations of any kind are made with respect to such Prototype. Buyer shall have the duty and sole responsibility to test a Prototype prior to acceptance and/or incorporation into end-use applications. Further, a production product based on a Prototype design may differ in assembly methods and materials from the Prototype. Buyer, therefore, shall have the duty and sole responsibility for testing and acceptance of production products which are based on Prototype designs. IN NO EVENT SHALL WATLOW OR ITS AFFILIATES BE LIABLE FOR ANY INCIDENTAL, CONSEQUENTIAL, EXEMPLARY, PUNITIVE, SPECIAL, INDIRECT, OR SIMILAR DAMAGES (INCLUDING LOST REVENUE OR PROFITS) ARISING OUT OF OR RELATED TO ITS PERFORMANCE UNDER THESE TERMS AND CONDITIONS. BUYER'S EXCLUSIVE REMEDY AND WATLOW'S AND ITS AFFILIATES' EXCLUSIVE LIABILITY UNDER THESE TERMS AND CONDITIONS OR OTHERWISE (INCLUDING NEGLIGENCE) SHALL BE FOR DAMAGES WHICH SHALL IN NO EVENT EXCEED SO MUCH OF THE PURCHASE PRICE AS IS APPLICABLE TO THAT PORTION OF THE PARTICULAR SHIPMENT OF PRODUCTS WITH RESPECT TO WHICH DAMAGES ARE CLAIMED. THE LIMITATIONS ON LIABILITY IN THIS SECTION SHALL APPLY TO THE MAXIMUM EXTENT PERMITTED BY APPLICABLE LAW, REGARDLESS OF THE CAUSE OF ACTION OR BASIS OF LIABILITY (WHETHER BASED IN CONTRACT, INFRINGEMENT, NEGLIGENCE, OTHER TORT OR OTHERWISE). THESE LIMITATIONS ON LIABILITY ARE AN ESSENTIAL PART OF THIS AGREEMENT AND SHALL BE VALID AND BINDING EVEN IF ANY REMEDY IS DEEMED TO FAIL OF ITS ESSENTIAL PURPOSE.

Miscellaneous:

THE VALIDITY, INTERPRETATION AND PERFORMANCE OF THIS AGREEMENT AND/OR ORDER AND ANY DISPUTE CONNECTED HEREWITH SHALL BE GOVERNED AND CONSTRUED IN ACCORDANCE WITH THE LAWS OF THE STATE OF MISSOURI. These Terms and Conditions constitute the full understanding of the parties, a complete allocation of risks between them and a complete and exclusive statement of the terms and conditions of their agreement and/or order relating to the subject matter herein. Any terms and conditions proposed in Buyer's purchase order or in any acknowledgment, invoice, or other documentation of Buyer that add to, vary from, or conflict with the terms herein are hereby rejected and the terms hereof shall be binding upon the parties. Except as otherwise expressly provided herein, no conditions, usage of trade, course of dealing or performance, understanding or agreement and/or order purporting to modify, vary, explain or supplement the terms or conditions of this agreement and/or order shall be binding unless hereafter made in writing and signed by the party to be bound, and no modification shall be effected by the acknowledgment or acceptance of any purchase order or shipping instruction forms containing terms or conditions at variance with or in addition to those set forth herein. No waiver by either party with respect to any breach or default or of any right or remedy and no course of dealing or performance shall be deemed to constitute a continuing waiver of any other breach or default or of any other right or remedy, unless such waiver be expressed in writing signed by the party to be bound. If any term, condition or provision of this agreement and/or order or the application thereof is judicially or otherwise determined to be invalid or unenforceable, or if the parties mutually agree in writing to any revision of this agreement and/or order, the remainder of this agreement and/or order and the application thereof shall not be affected, and this agreement and/or order shall otherwise remain in full force and effect.

Watlow - U.S. Standard Terms of Sale (08-2019)