Bulletin
B-2020
Revised 4/24

B SERIES

Versa Product Company, Inc., 22 Spring Valley Rd., Paramus, NJ 07652 USA Phone: (201) 843-2400 Fax: (201) 843-2931
Versa BV, Prins Willem Alexanderlaan 1427, 7312 GB Apeldoorn, The Netherlands Phone: +31-55-368-1900 Fax: +31-55-368-1909
E-mail: sales@versa-valves.com www.versa-valves.com

Visit VersaSelect for the full selection

Versa exercises diligence to assure that information contained in this catalog is correct, but does not accept responsibility for any errors or omissions. Versa also reserves the right to change or delete data or products at any time without prior notification. To be sure the data you require is correct, consult factory.

Two-Way Types for bleeding pilots of larger valves, for bleeding cylinders or small pressure systems, operating air tools or motors, opening or closing air lines.

Three-Way Types for controlling pilots or diaphragms of larger valves or small cylinders or any pressure system that is alternately pressurized and exhausted.

Service: Pneumatic-vacuum to 200 psi (14 bar). Two way can be used for hydraulic pressures to 500 psi.

- Pilot, Manual, and Mechanical Actuation
- Plunger travels only 3/16”
- Full 3/16” Flow Area
- All Brass Bodies and Stainless Steel Plunger
- Service: Pneumatic-vacuum to 200 psi. Two-way can be used for hydraulic pressures to 500 psi.
- Leakproof: Uses standard “O” ring seals; fluorocarbon and low temperature seals available
- High Cv; (Normally Closed: 0.6, Normally Open: 0.5)
- Available with 1/8” NPT Threaded Ports in Valve Body or with O-ring Recessed Ports for Subplate or Manifold Mounting. (See page 7)

Note: All Series “B” valves utilize the basic design and parts of the button-operated types shown below. Basic dimensions and parts lists shown on page 7. Those parts listed and dimensions shown for specific valve types, are required in addition to or in place of the basic parts and dimensions shown on page 7.

PLAIN BUTTON

BIK-3209 Shown
Not Panel Mounting

BIK-3209-P Shown
Panel Mounting

BIK-3209-P-294B Shown
Panel Mounting with Rubber Button Cover

WITHOUT GUARD: For palm, finger, knee, or straight-line mechanical operation. Can also be cam actuated if cam rise is gradual. Aluminum button is 3/16” above valve body, the distance required for full actuation. Nominal operating force is 3.75 lb. + .05 times line pressure.

	Normally Closed		**Normally Open**	
Without Button Guard	Panel Mtg.	Not Panel Mtg.	Panel Mtg.	Not Panel Mtg.
TWO WAY	BIK-2209-P	BIK-2209	BIK-2207-P	BIK-2207
THREE WAY	BIK-3209-P	BIK-3209	BIK-3207-P	BIK-3207

Suffix Options:

—67 Stainless steel button
—68 Mtg. holes clear #10 screw
—155 Fluorocarbon seals
— 294B Rubber button cover
—167 Body (and nuts where applicable), brass internals and aluminum button electroless nickel plated.
—S Strong spring for applications with marginal lubrication.

BIK-3208 Shown
Not Panel Mounting

BIK-2208-P Shown
Panel Mounting

WITH GUARD: For fingertip or straight-line mechanical operation. Button is flush with extended guard to protect against accidental actuation. Aluminum button travels 3/16” for full actuation. Nominal operating force is 3.75 lb. + .05 times line pressure.

	Normally Closed		**Normally Open**	
With Button Guard	Panel Mtg.	Not Panel Mtg.	Panel Mtg.	Not Panel Mtg.
TWO WAY	BIK-2208-P	BIK-2208	BIK-2206-P	BIK-2206
THREE WAY	BIK-3208-P	BIK-3208	BIK-3206-P	BIK-3206

Suffix Options:

—67 Stainless steel button
—68 Mtg. holes clear #10 screw
—155 Fluorocarbon seals
—167 Body (and nuts where applicable), brass internals and aluminum button electroless nickel plated.
—S Strong spring for applications with marginal lubrication.

PALM BUTTON

BIK-3208-25B Shown

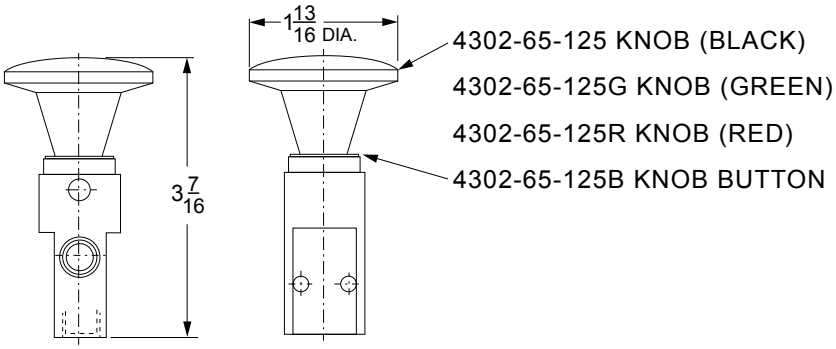

Large-diameter black plastic button is standard, for comfortable operation. Green Knob or Red Knob is available. See suffix options below. Nominal operating force is 3.75 lb. + .05 times line pressure.

	Normally Closed		Normally Open	
Palm Button	Panel Mtg*.	Not Panel Mtg	Panel Mtg*.	Not Panel Mtg.
TWO WAY	BIK-2208-P-25B	BIK-2208-25B	BIK-2206-P-25B	BIK-2206-25B
THREE WAY	BIK-3208-P-25B	BIK-3208-25B	BIK-3206-P-25B	BIK-3206-25B

Green knob or red knob is available. See Suffix options below.

Suffix Options:

—25BG Green Knob
—25BR Red Knob
—67 Stainless steel button
—68 Mtg. holes clear #10 screw
—155 Fluorocarbon seals
—167 Body (and nuts where applicable), brass internals and aluminum button 2209-03-25B are electroless nickel plated.
—S Strong spring for applications with marginal lubrication.

*See page 7 for panel Mtg. dimensions.

PALM LEVER

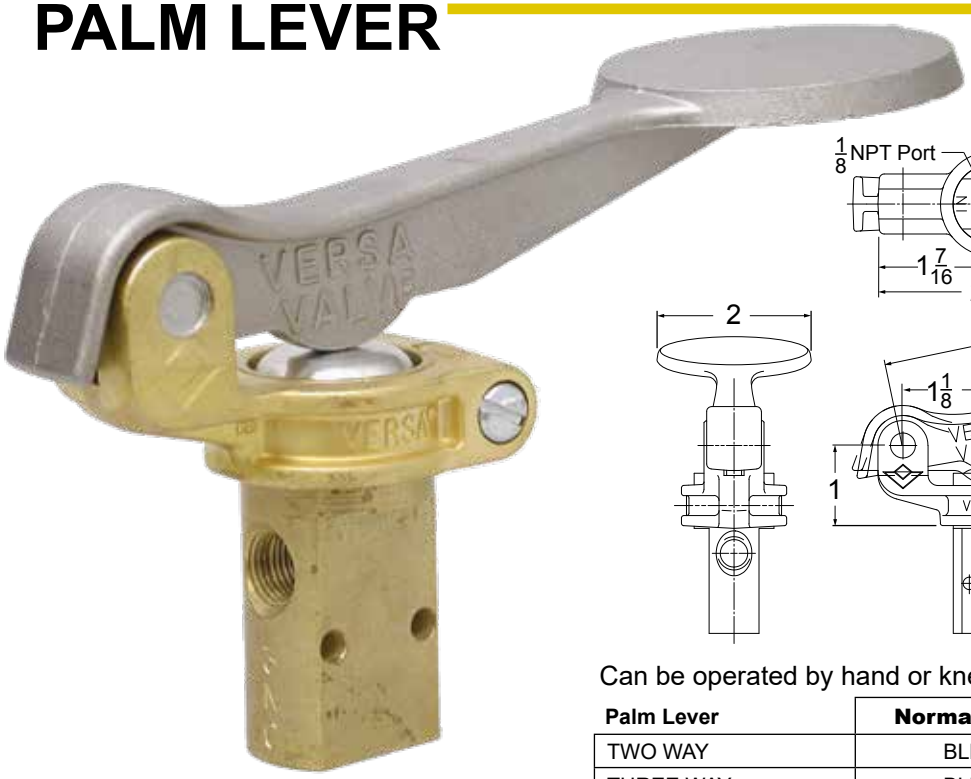

BLK-3208 Shown

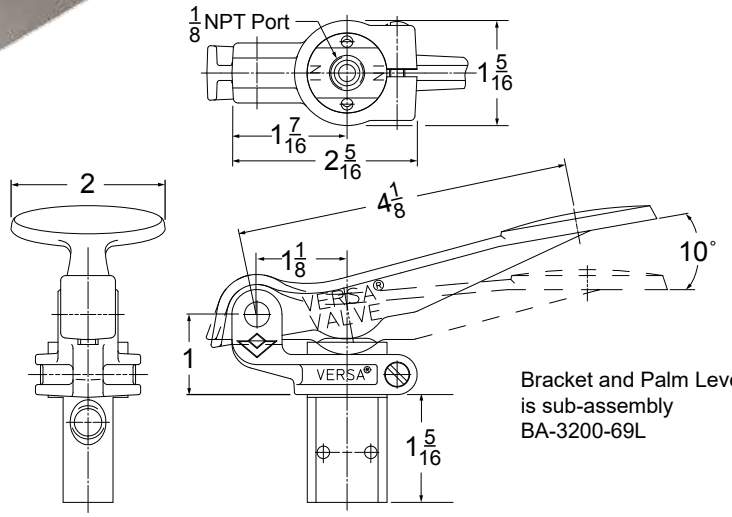

Bracket and Palm Lever is sub-assembly BA-3200-69L

Can be operated by hand or knee. A light touch is sufficient.

Palm Lever	Normally Closed	Normally Open
TWO WAY	BLK-2208	BLK-2206
THREE WAY	BLK-3208	BLK-3206

Suffix Options:

—67 Stainless steel button
—68 Mtg. holes clear #10 screw
—155 Fluorocarbon seals
—167 Body (and nuts where applicable), brass internals and aluminum button electroless nickel plated.
—S Strong spring for applications with marginal lubrication.

PALM BUTTON E-STOP

BIK-3206-E161C Shown

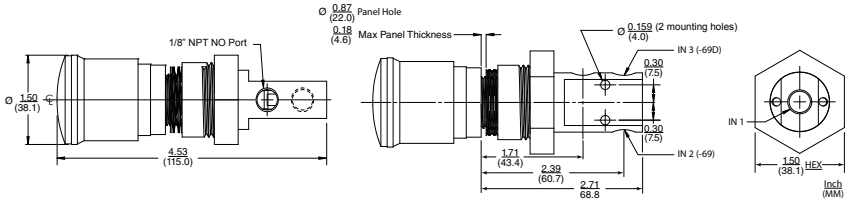

The Versa E-Stop valve is designed for pneumatic systems that require an emergency stop function. By pushing the knob attached to the Versa 3-Way Normally Open B Series valve, the source air is blocked and the system air is vented to atmosphere. 3-Way Normally Closed also available.

The knob uses an electrical E-Stop twist and lock feature that prevents the valve from returning to the de-energized state until it is manually reset.

The B Series E-Stop is an ideal solution for an all pneumatic system. In systems where a pneumatic circuit is preferred over electrical, such as hazardous environment, the B Series E-Stop is the perfect safety solution.

The control valve is based on Versa's B Series brass valve which is field proven with years of reliable service in push button applications.

For ease of installation, the valve body may be rotated 360 degrees and has a choice of three inlet port locations.

Optional:
*E- Stop
Legend Plate
Shown

		Part Number Selection		
		Inlet Position		
Function	Cv	IN 1	IN 2	IN 3
2 Way, Normally Closed	0.6	BIK-2208-E161C	BIK-2208-E161C-69	BIK-2208-E161C-69D
2 Way, Normally Open	0.5	BIK-2206-E161C	BIK-2206-E161C-69	BIK-2206-E161C-69D
3 Way, Normally Closed	0.6	BIK-3208-E161C	BIK-3208-E161C-69	BIK-3208-E161C-69D
3 Way, Normally Open	0.5	BIK-3206-E161C	BIK-3206-E161C-69	BIK-3206-E161C-69D

*E-Stop Legend Plate Part Number 3209-29-E161LP-E

HAND LEVER

BHK-3208-S Shown

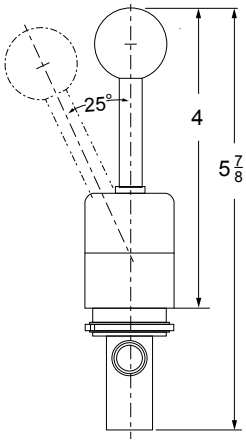

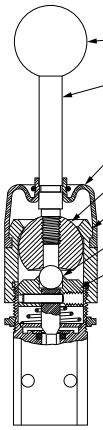

P-1001-08 BALL
3209-24 HANDLE
4302-19D GLAND SEAL
3209-23A BALL**
3209-18L LEVER CAP
P-1003-10 BALL
3209-25 BUTTON

**BALL SHOWN IS SPRING RETURN TYPE - DETENT TYPE IS 3209-23

Hand Lever sub-assembly is
BA-3200-69S (spring BHS type)
BA-3200-69K (spring BHK type)

Light force, offsetting the handle 25° from vertical, is sufficient to operate SPRING RETURN: Remains actuated only while handle is held in offset position.

Hand Lever (Spring Return)	Normally Closed	Normally Open
TWO WAY	BHS-2208	BHS-2206
THREE WAY	BHS-3208	BHS-3206

DETENTED: Once offset, handle will stay in position, springs back when pushed slightly out of position

Hand Lever (Detented)	Normally Closed	Normally Open
TWO WAY	BHK-2208-S	BHK-2206-S
THREE WAY	BHK-3208-S	BHK-3206-S

Suffix Options:

—68 Mtg. holes clear #10 screw
—155 Fluorocarbon seals
—167 Body, brass internals, lever cap are electroless nickel plated
—S Strong spring for applications with marginal lubrication. Std on detented type.

CAM LEVER

BCK-3208 Shown

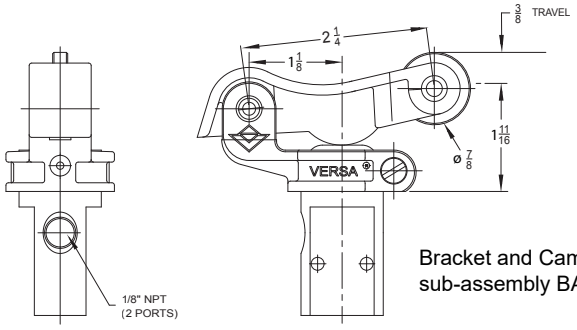

Bracket and Cam Lever is sub-assembly BA-3200-40

Actuated by cam movement in either direction. Cam follower is hardened.

Cam Lever	Normally Closed	Normally Open
TWO WAY	BCK-2208	BCK-2206
THREE WAY	BCK-3208	BCK-3206

Suffix Options:

—67 Stainless steel button
—68 Mtg. holes clear #10 screw
—155 Fluorocarbon seals
—167 Body, brass internals, bracket and aluminum button are plated with electroless nickel.
—S Strong spring for applications with marginal lubrication.

BALL CAM
BALL CAM - BALL CAM With Overtravel

Ball C
any angle
Overtrave

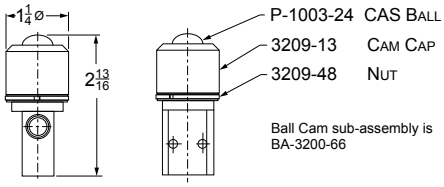

Ball Cam sub-assembly is BA-3200-66

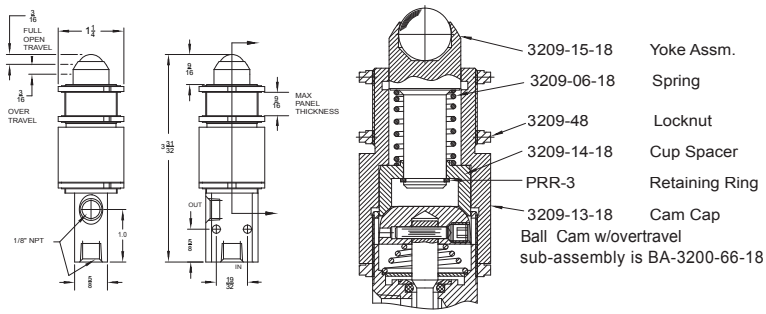

Ball Cam w/overtravel sub-assembly is BA-3200-66-18

BIK-3208-66 Shown

BIK-3208-66-18 Shown

Ball Cam can be operated by a cam or machine member from any angle, but pressure angle should not exceed 20° (15° for Overtravell cam) from vertical center line.

Overtravel cam Has 3/16"over-travel after full actuation. This valve can be panel mounted. Cam follower is hardened 430F stainless steel.

Ball Cam	Normally Closed	Normally Open
TWO WAY	BIK-2208-66	BIK-2206-66
THREE WAY	BIK-3208-66	BIK-3206-66

Ball Cam With Overtravel	Normally Closed	Normally Open
TWO WAY	BIK-2208-66-18	BIK-2206-66-18
THREE WAY	BIK-3208-66-18	BIK-3206-66-18

Suffix Options:

—68 Mtg. holes clear #10 screw.
—155 Fluorocarbon seals.
—167 Body, brass internals, cam cap are electroless nickel plated.
—S Strong spring for applications with marginal lubrication.

TRIP-CAM LEVER

BCK-3208-35 Shown

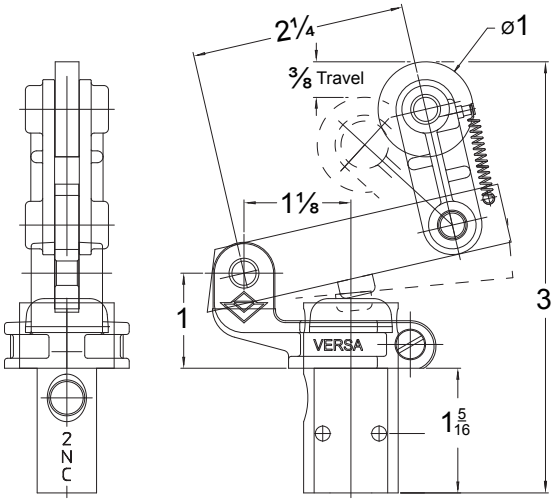

Bracket and Trip-Cam Lever is sub-assembly BA-3200-40-35.

Actuated by cam travel in one direction only. Overriding device prevents actuation on return stroke. Cam follower is hardened.

Trip-Cam Lever	Normally Closed	Normally Open
TWO WAY	BCK-2208-35	BCK-2206-35
THREE WAY	BCK-3208-35	BCK-3206-35

Suffix Options:

—67 Stainless steel button
—68 Mtg. holes clear #10 screw
—155 Fluorocarbon seals
—167 Body, brass internals, bracket and aluminum and aluminum button electroless nickel plated.
—S Strong spring for applications with marginal lubrication.

PILOT

BPS-2208 Shown

Controlled by a low-pressure signal applied to a small pilot piston integrated into the valve. This actuates the valve. When the pressure is exhausted, the valve returns to the unactuated position. Pilot medium is separate from medium being controlled.

⅛ NPT Pilot Port

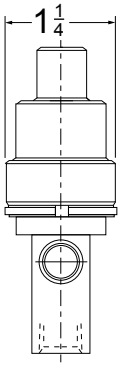

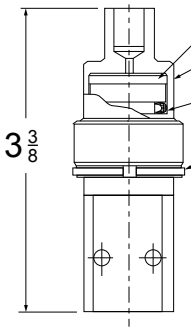

3209-07	Piston
3209-11	Pilot Cap
P-1016-U13-11	"U" Cup
3209-48	Nut

Pilot Cap Sub-Assembly is BA-3200-64

Pilot	Normally Closed	Normally Open
TWO WAY	BPS-2208	BPS-2206
THREE WAY	BPS-3208	BPS-3206

Minimum Pilot Pressure required for Actuation (PSI)	18	20	22	24	26	28	30	32	34	36
If Inlet Pressure (PSI) is:	0-20	40	60	80	100	120	140	160	180	200

Suffix Options:

— 67 Brass and stainless steel internals
— 68 Mtg. holes clear #10 screw
—155 Fluorocarbon seals
— 167 Body, brass internals, pilot cap are electroless nickel plated.
— S Strong spring for applications with marginal lubrication. Increases pilot pressure by 45%.

BASIC VALVE DIMENSIONS AND PARTS

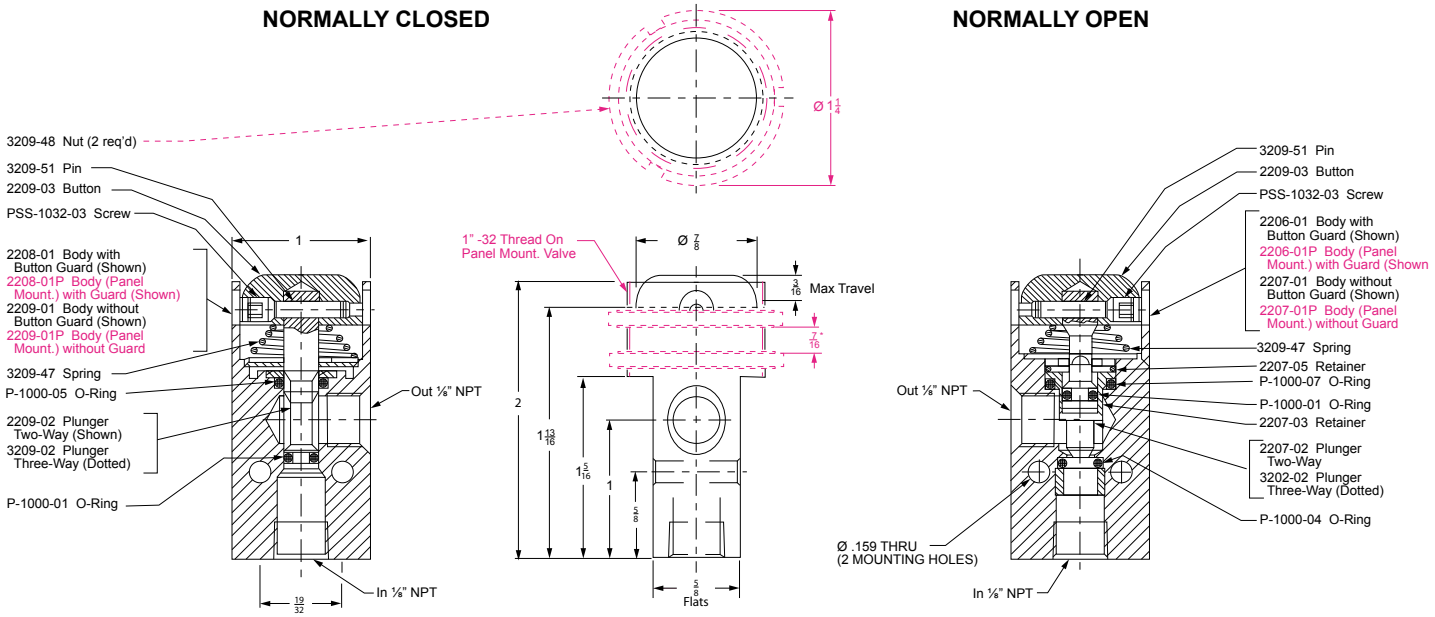

* Maximum panel thickness is 7/16" except for valves without button guard. For theses, maximum panel thickness is 1/4".

Repair Kits	Basic Valve Kit		Fluorocarbon Valve Kit	
	Manual & Mechanical	Pilot	Manual & Mechanical	Pilot
2 way NO	B-2207	B-2207-P	B-2207-155	B-2207-P-155
2 way NC	B-2209	B-2209-P	B-2209-155	B-2209-P-155
3 way NO	B-3207	B-3207-P	B-3207-155	B-3207-P-155
3 way NC	B-3209	B-3209-P	B-3209-155	B-3209-P-155

MANIFOLD MOUNTING TYPE

Any of the standard Series "B" Valves can be supplied for manifold mounting. O-ring recessed ports are provided on one of the body. Valves can be grouped on a common multiple manifold, as shown below. A common inlet supplies all valves on the manifold. Custom designs are also available.

Manifold BM-4 Shown

BIK-3218 Shown

Valves & Manifold Shown Below
4) BIK-3219
1) BM-4

Consult factory for information about types of multiple manifolds available.

Versa's experience and reputation in supplying the fluid power industry with pneumatic and hydraulic components is unsurpassed. Our success is based on over 70 years of designing and manufacturing valves, solenoids, pneumatic relays, resets, pilot valves and related accessories for an extremely demanding marketplace.

WARNINGS REGARDING THE DESIGN APPLICATION, INSTALLATION AND SERVICE OF VERSA PRODUCTS

The warnings below must be read and reviewed before designing a system utilizing, installing, servicing, or removing a Versa product. Improper use, installation or servicing of a Versa product could create a hazard to personnel and property.

DESIGN APPLICATION WARNINGS

Versa products are intended for use where compressed air or industrial hydraulic fluids are present. For use with media other than specified or for non-industrial applications or other applications not within published specifications, consult Versa.

Versa products are not inherently dangerous. They are only a component of a larger system. The system in which a Versa product is used must include adequate safeguards to prevent injury or damage in the event of system or product failure, whether this failure be of switches, regulators, cylinders, valves or any other system component. System designers must provide adequate warnings for each system in which a Versa product is utilized. These warnings, including those set forth herein, should be provided by the designer to those who will come in contact with the system.

Where questions exist regarding the applicability of a Versa product to a given use, inquiries should be addressed directly to the manufacturer. Confirmation should be obtained directly from the manufacturer regarding any questioned application prior to proceeding.

INSTALLATION, OPERATION AND SERVICE WARNINGS

Do not install or service any Versa product on a system or machine without first depressurizing the system and turning off any air, fluid, or electricity to the system or machine. All applicable electrical, mechanical, and safety codes, as well as applicable governmental regulations and laws must be complied with when installing or servicing a Versa product.

Versa products should only be installed or serviced by qualified, knowledgeable personnel who understand how these specific products are to be installed and operated. The individual must be familiar with the particular specifications, including specifications for temperature, pressure, lubrication, environment and filtration for the Versa product which is being installed or serviced. Specifications may be obtained upon request directly from Versa. If damages should occur to a Versa product, do not Operate the system containing the Versa product. Consult Versa for technical information.

LIMITED WARRANTY DISCLAIMER AND LIMITATION OF REMEDIES

Versa's Series products are warranted to be free from defective material and workmanship for a period of ten years from the date of manufacture, provided said products are used in accordance with Versa specifications. Versa's liability pursuant to that warranty is limited to the replacement of the Versa product proved to be defective provided the allegedly defective product is returned to Versa or its authorized distributor. Versa provides no other warranties, expressed or implied, except as stated above. There are no implied warranties of merchantability or fitness for a particular purpose. Versa's liability for breach of warranty as herein stated is the only and exclusive remedy and in no event shall Versa be responsible or liable for incidental or consequential damages.

Versa Products Company Inc.
22 Spring Valley Road
Paramus, New Jersey 07652
USA
Phone: 201-843-2400
Fax: 201-843-2931

Versa BV
Prins Willem Alexanderlaan 1429
7321 GB Apeldoorn
The Netherlands
Phone: 01131-55-368-1900
Fax: 01131-55-368-1909

VERSA® Valves
www.versa-valves.com
email: sales@versa-valves.com